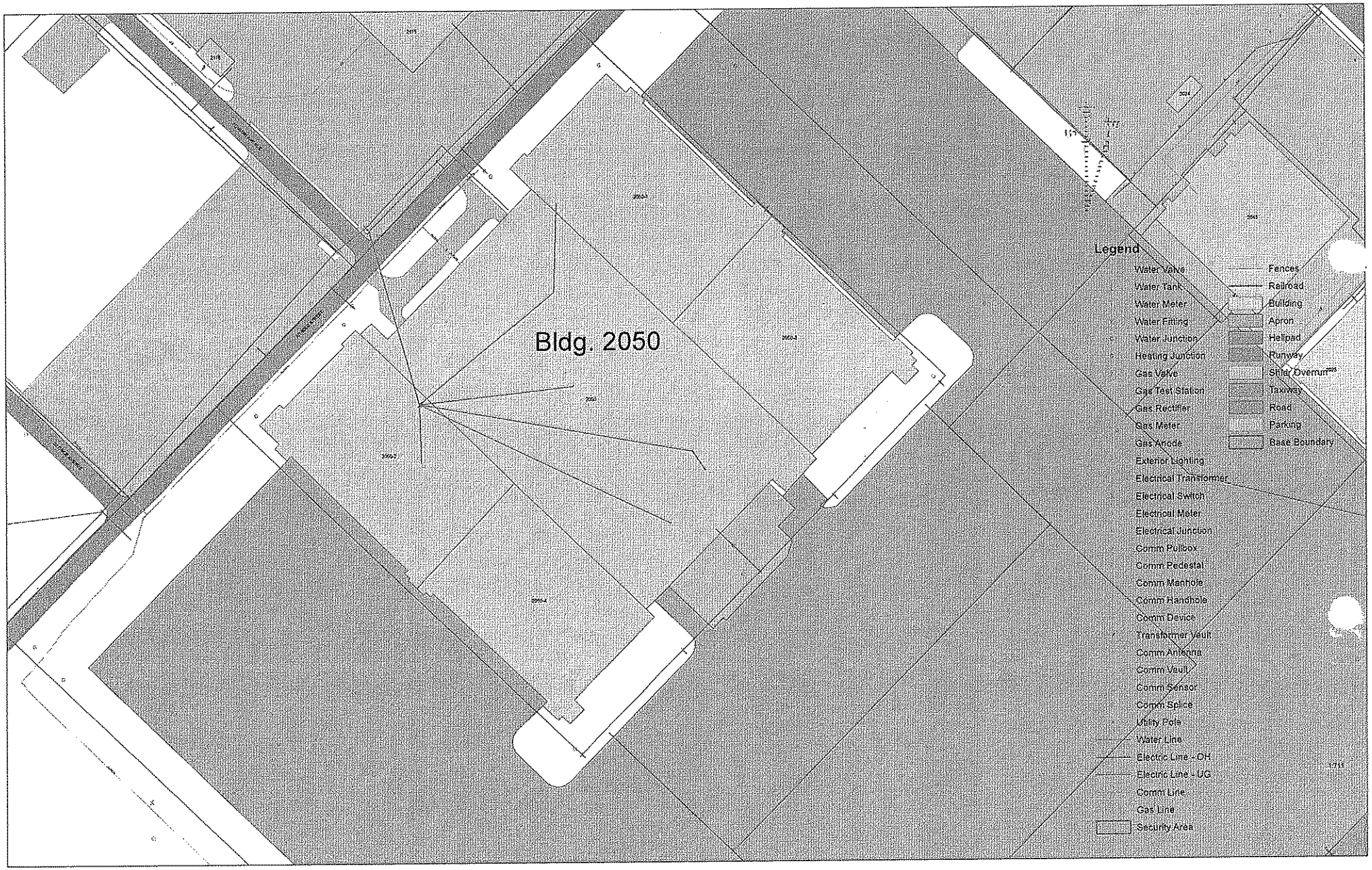
Bldg. 2050
Legend
Water Valve
Water Tank
Water Meter
Water Fitting
Water Junction
Heating Junction
Gas Valve
Gas Test Station
Gas Rectifier
Gas Meter
Gas Anode
Exterior Lighting
Electrical Transformer
Electrical Switch
Electrical Meter
Electrical Junction
Comm Pullbox
Comm Pedestal
Comm Manhole
Comm Handhole
Comm Device
Transformer Vault
Comm Antenna
Comm Vault
Comm Sensor
Comm Splice
Utility Pole
Water Line
Electric Line - OH
Electric Line - UG
Comm Line
Gas Line
Security Area
Fences
Railroad
Building
Apron
Helipad
Runway
Stiller Overrun
Taxiway
Road
Parking
Base Boundary

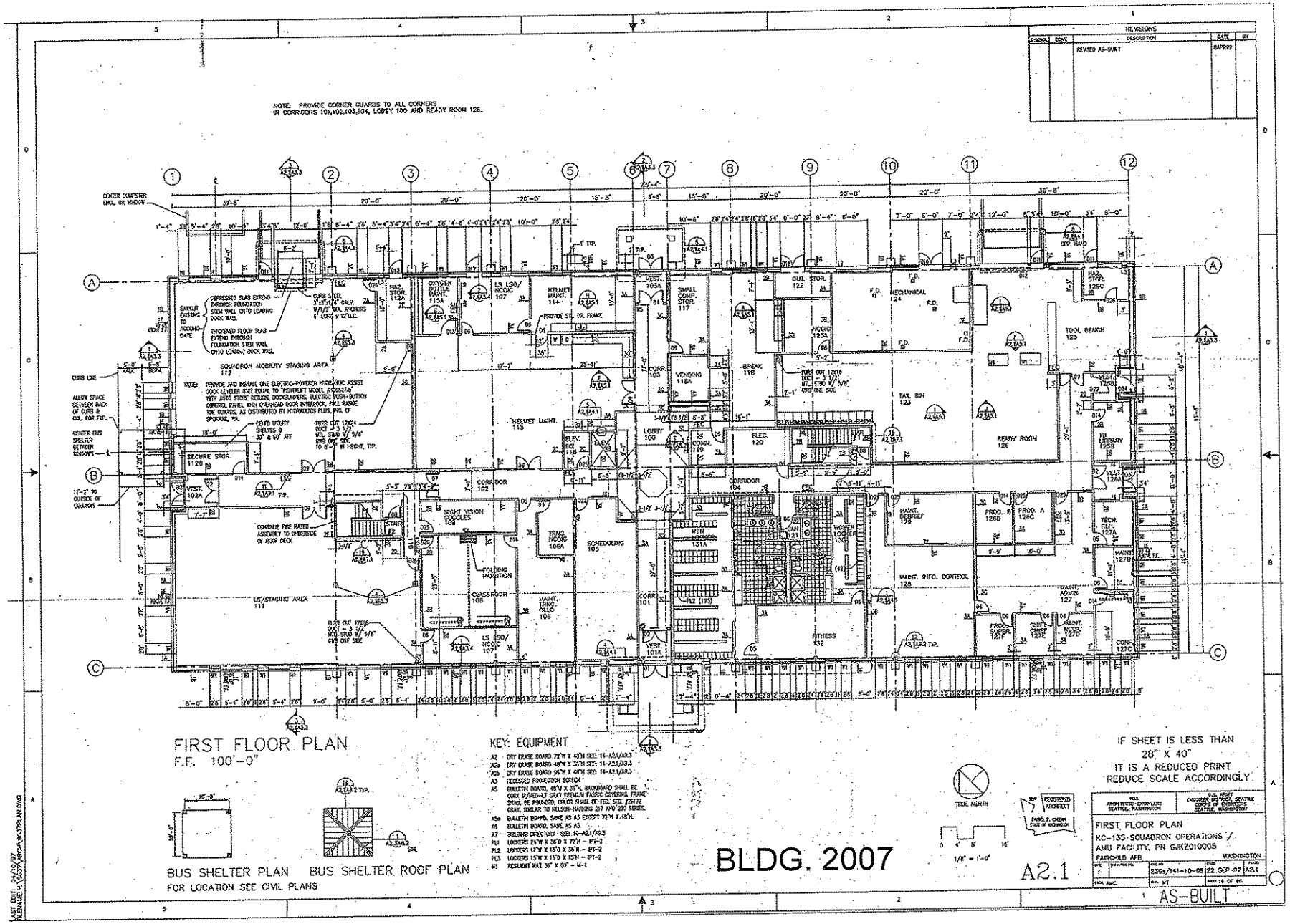

FIRST FLOOR PLAN
F.F. 100'-0"

KEY: EQUIPMENT

A2 DRY ERASE BOARD 72"W X 48"H SEE: 14-A2.1/A9.3
A2a DRY ERASE BOARD 48"W X 36"H SEE: 14-A2.1/A9.3
A2b DRY ERASE BOARD 96"W X 48"H SEE: 14-A2.1/A9.3
A3 RECESSED PROJECTION SCREEN
A5 BULLETIN BOARD, 48"W X 36"H, BACKBOARD SHALL BE CORK IN/AND-LT GRAY PREMIUM FABRIC COVERING. FRAME SHALL BE ROUNDED, COLOR SHALL BE FED. STD. #26132 GRAY, SIMILAR TO NELSON-HARKINS 217 AND 230 SERIES.
A5a BULLETIN BOARD, SAME AS A5 EXCEPT 72"W X 48"H.
A6 BULLETIN BOARD, SAME AS A5.
A7 BUILDING DIRECTORY SEE: 10-A2.1/A9.3
PL1 LOCKERS 24"W X 36"D X 72"H - PT-2
PL2 LOCKERS 12"W X 18"D X 36"H - PT-2
PL3 LOCKERS 15"W X 15"D X 15"H - PT-2
M1 RESILIENT MAT 36" X 60" - M-1

IF SHEET IS LESS THAN 28" X 40" IT IS A REDUCED PRINT REDUCE SCALE ACCORDINGLY

FIRST FLOOR PLAN
KC-135 SQUADRON OPERATIONS / AMU FACILITY, PN GJKZ010005
FAIRCHILD AFB WASHINGTON
F 236s/141-10-09 22 SEP 97 A2.1
AS-BUILT

REVISIONS				
SYMBOL	ZONE	DESCRIPTION	DATE	BY
		REVISED AS-BUILT	11DEC98	JPJL

NOTE: PROVIDE CORNER GUARDS TO ALL CORNERS IN CORRIDORS 203,204,205 AND LOBBY 202.

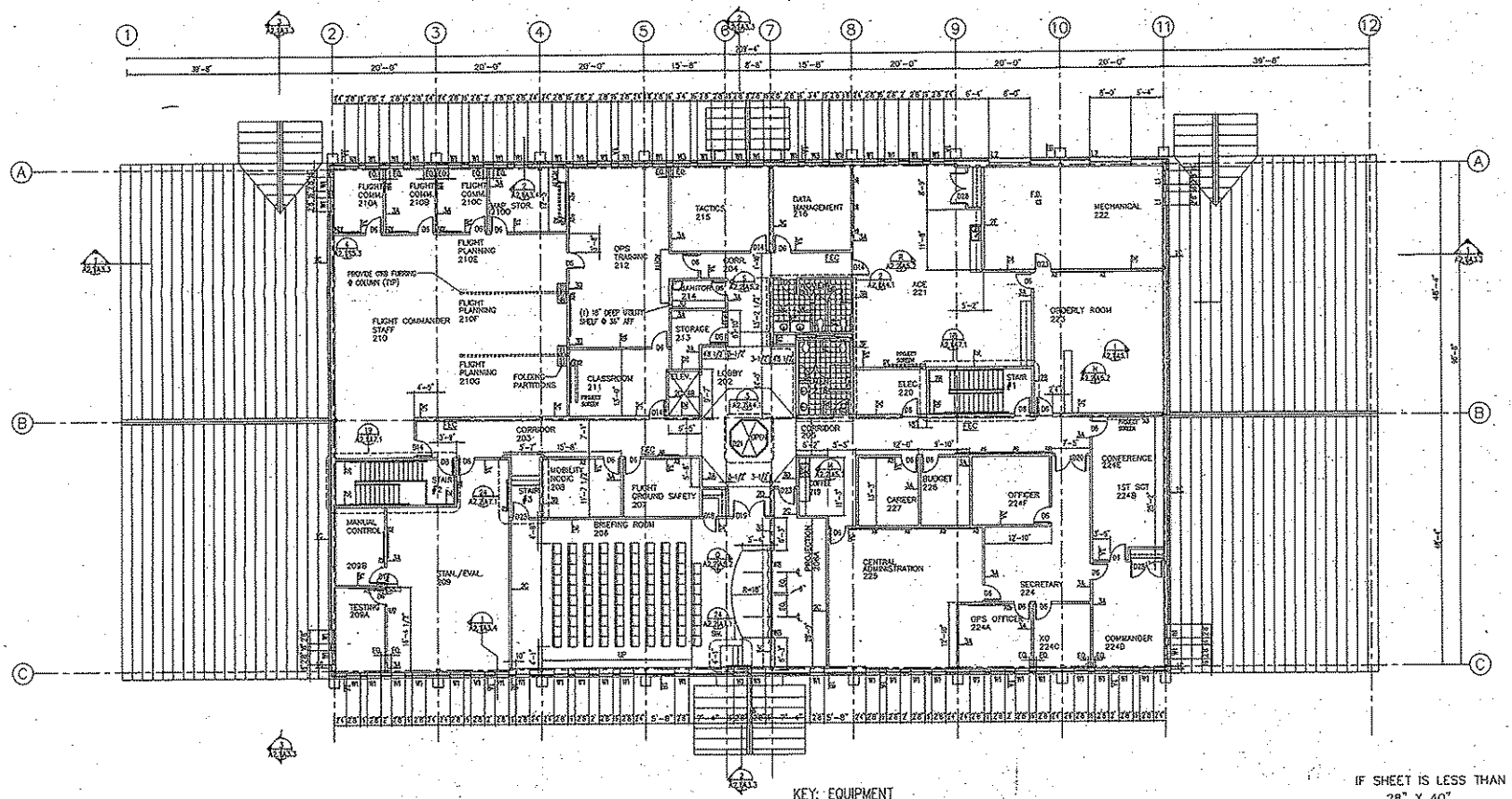

SECOND FLOOR PLAN

F.F. 114'-0"

BLDG. 2007

KEY: EQUIPMENT

A2 DRY ERASE BOARD 72"W X 48"H SEE: 14-A2.1/A9.3
A2a DRY ERASE BOARD 48"W X 36"H SEE: 14-A2.1/A9.3
A2b DRY ERASE BOARD 36"W X 48"H SEE: 14-A2.1/A9.3
A3 RECESSED PROJECTION SCREEN
A5 BULLETIN BOARD, 48"W X 36"H, BACKBOARD SHALL BE CORK W/MED-LT GRAY PREMIUM FABRIC COVERING FRAME SHALL BE BOUNDER, COLOR SHALL BE FED. STD. #26132 GRAY, SIMILAR TO NELSON-HARKINS 217 AND 230 SERIES.
A5a BULLETIN BOARD, SAME AS A5 EXCEPT 72"W X 48"H.
A6 BULLETIN BOARD, SAME AS A5.
A7 BUILDING DIRECTORY
PL1 LOCKERS 24"W X 36"D X 72"H
PL2 LOCKERS 12"W X 18"D X 36"H
PL3 LOCKERS 15"W X 15"D X 15"H

TRUE NORTH

0 4' 8' 16' 1/8" = 1'-0"

A2.2

IF SHEET IS LESS THAN 28" X 40" IT IS A REDUCED PRINT REDUCE SCALE ACCORDINGLY

REGISTERED ARCHITECT DANIEL P. CALLAN STATE OF WASHINGTON

U.S. ARCHITECTS-ENGINEERS SEATTLE, WASHINGTON	U.S. ARMY ENGINEER DISTRICT, SEATTLE CORPS OF ENGINEERS SEATTLE, WASHINGTON

SECOND FLOOR PLAN
KC-135 SQUADRON OPERATIONS / AMU FACILITY, PN GJKZ010005
FAIRCHILD AFB WASHINGTON

SIZE	DRAWING NO.	FILE NO.	DATE	SHEET
F		236a/141-10-09	22 SEP 97	A2.2
DWN. AMC		CHK. MT	SHEET 17 OF 66	

AS-BUILT

ASH 1041 04/10/97
FILENAME: V:\3637\ARCH\3637PLAN.DWG

TRUNK LAYOUT – BLDG.2007

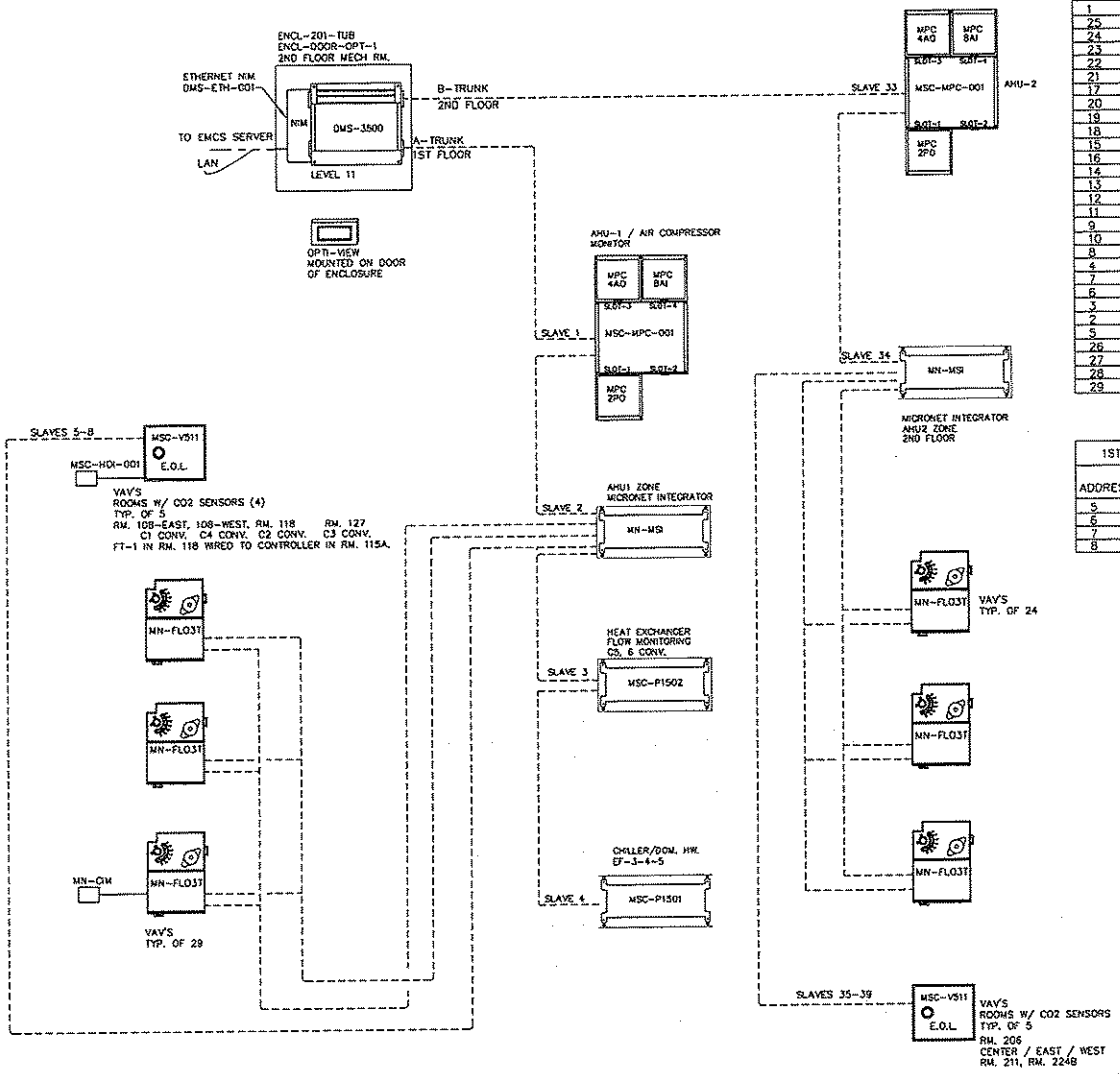

1ST FLOOR VAV SCHEDULE MICRONET CONTROLLERS				
ADDRESS	ROOM	UNIT TAG #	BOX SIZE	CFM MIN/MAX
1	125	FPVAV13	10	1000/300
25	123E	VAV-18	6	140/70
24	123W	VAV-20	6	300/100
23	123C	VAV-19	6	140/70
22	120	CV-17	6	300
21	103	VAV-15	6	300/150
17	102	VAV-14	8	700/350
20	115	CV-13	6	340
19	113	VAV-12	8	440/140
18	112	FPVAV11	12	1600/300
15	107	FPVAV9	8	400/150
16	106A	VAV-11	6	300/100
14	106	FPVAV8	8	700/210
13	105	FPVAV7	8	580/140
12	101	VAV-8	6	200/150
11	131A	CV-7	8	540
9	130A	CV-6	6	350
10	104	VAV-5	6	400/200
8	132	FPVAV6	8	700/255
4	129	VAV-2	8	400/200
7	127E	FPVAV4	8	420/130
6	127B	FPVAV2	8	500/170
3	125B	FPVAV1	6	250/80
2	126	VAV-1	8	460/150
5	126C	VAV-3	6	280/140
26	115A	FPVAV12	10	930/300
27	111	FPVAV10	12	1520/300
28	127C	FPVAV3	8	600/240
29	128	FPVAV5	10	820/410

2ND FLOOR VAV SCHEDULE MICRONET CONTROLLERS				
ADDRESS	ROOM	UNIT TAG #	BOX SIZE	CFM MIN/MAX
27	223	FPVAV14	8	500/170
24	224D	FPVAV16	8	560/140
20	225	FPVAV17	8	650/325
22	224	VAV-23	5	240/190
19	224A	FPVAV18	8	300/140
18	206A	FPVAV19	6	444/100
16	209	FPVAV20	10	1050/360
15	209A	FPVAV21	8	450/180
14	209B	FPVAV22	6	220/80
13	203	VAV-28	6	400/200
17	208	VAV-25	6	320/120
23	224F	VAV-22	8	610/300
21	205	VAV-21	8	400/200
1	221	FPVAV28	12	1000/380
2	220	VAV-34	6	180/45
4	218	CV-33	6	250
3	217	CV-32	6	250
5	215	FPVAV27	10	1000/330
6	204	VAV-31	6	200/100
8	212	FPVAV26	12	1290/645
9	210E	VAV-29	10	1200/400
10	210C	FPVAV24	10	870/225
12	210	FPVAV23	10	1080/330
11	210A	FPVAV25	6	320/90

1ST FLOOR VAV SCHEDULE MSC-V511 CONTROLLERS				
ADDRESS	ROOM	UNIT TAG #	BOX SIZE	CFM MIN/MAX
5	118	VAV-16	10	1100/220
6	108E	VAV-9	8	520/220
7	108W	VAV-10	8	520/220
8	127	VAV-4	6	380/160

CV = CONSTANT VOLUME
VAV = VARIABLE VOLUME
FP = FAN POWERED

2ND FLOOR VAV SCHEDULE MSC-V511 CONTROLLERS				
ADDRESS	ROOM	UNIT TAG #	BOX SIZE	CFM MIN/MAX
35	206E	VAV-27	12	1200/300
36	206C	VAV-26	12	1200/300
37	206W	VAV-24	12	1200/300
38	211	VAV-30	8	600/150
39	224B	FBVAV-15	6	630/115

FBVAV-15 – THE AS-BUILTS SHOW AS FAN-POWERED BUT THE PROGRAM INDICATES NO FAN – PROBABLY NO FAN. MZ 5/30/05

BLDG. 2007

MISC. REVISIONS: 8-31-98

SIEBE ENVIRONMENTAL CONTROLS
SIEBE ENVIRONMENTAL CONTROLS
3915 E. MAIN
SPOKANE, WA. 99202

DESCRIPTION: TRUNK LAYOUT

JOB NAME: SQUAD OPS/AMU
LOCATION: F.A.F.B. SPOKANE, WA.
ARCHITECT: WJA PS
ENGINEER: WOOD / HARBINGER INC.
CONTRACTOR: SMK MECHANICAL
ENGR'D BY: R.RHODES
CHECKED BY:
PROJECT NO.:
DRAWN BY: D.S.
DRAWING NO. 98004-1
DATE 2-19-97 SHEET 1 OF 7

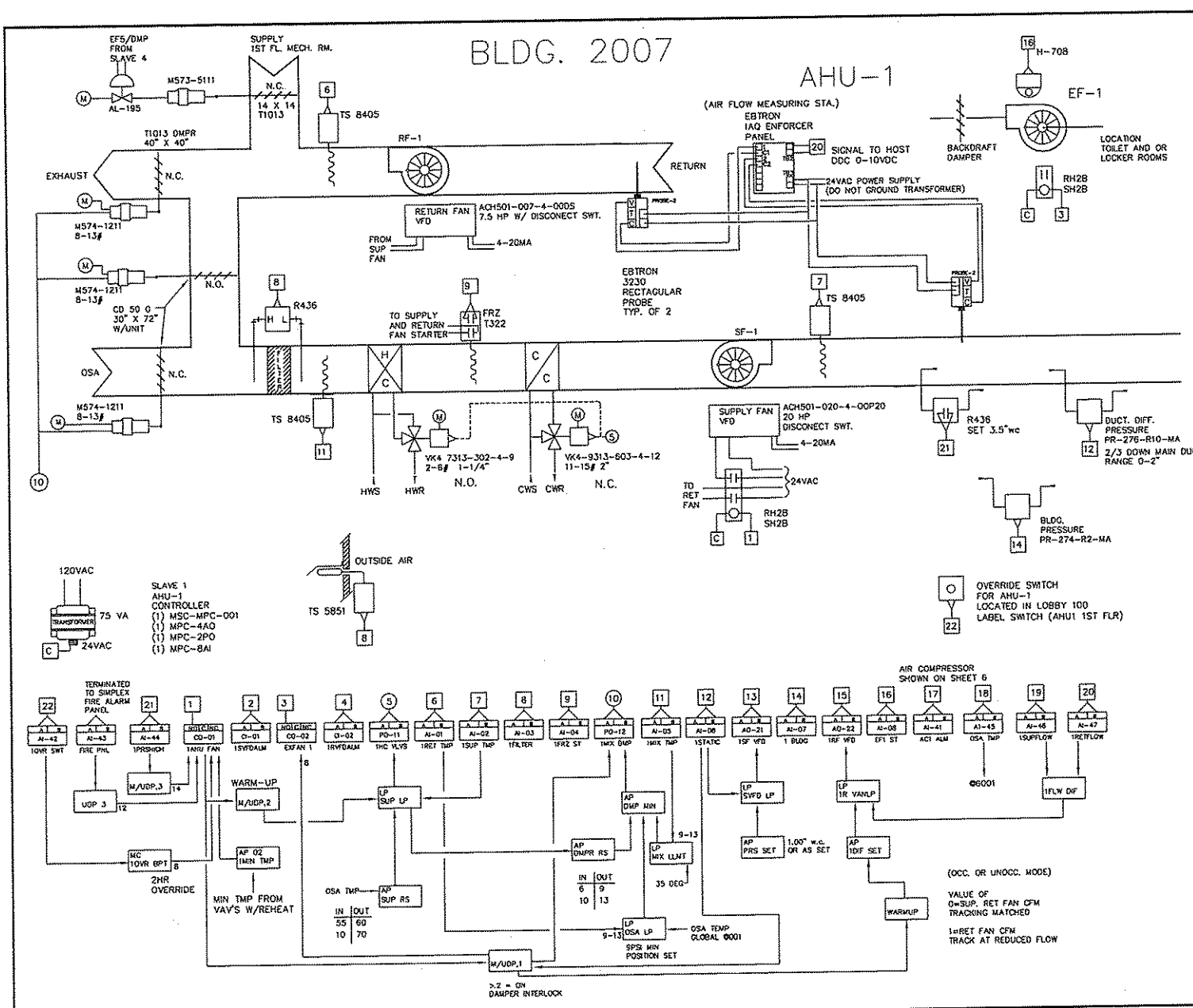

Sequence of operation AHU-1 / RF-1:

The Siebe automation control system will utilize optimal start, occupied and unoccupied modes of control.

Optimal start/warm-up mode: The Siebe automation system will calculate the outside air temp. and the space temperature to start the fan systems to bring the space temperatures up to occupied setpoint at the latest possible time.

During optimal start/warm-up the dampers will be positioned to full recirculation, variable frequency controlling to duct static pressure, the cooling valve in full bypass with the associated exhaust fans off and primary dampers of vav dampers open 100% supply air shall be set at 80 deg.

Occupied mode: The supply and return fans will operate continuously. Exhaust fan 1 shall be on. The dampers positioned to minimum outside air as set thru by balancing contractor. The heating valve, osa/return/relief dampers and cooling valve will modulate in sequence to maintain 60 degree supply air temperature. A call for heating will modulate the heating valve open with the dampers positioned to minimum. A call for cooling will modulate the dampers from minimum to 100% outside air, a further call for cooling will modulate the cooling valve open. The dampers will be positioned to minimum when the outside air temperature is greater than the return air temperature. Supply air temperature shall be reset off OSA temperature.

OSA TEMP	SUPPLY TEMP
10 DEG OR LESS	70 DEG
55 DEG AND ABOVE	60 DEG

Ventilation mode: The Siebe controller will position dampers to maintain 5500 cfm minimum outside air during the ventilation mode.

Supply air static pressure control: A duct static pressure sensor located 2/3 down the longest supply duct run will signal the Siebe controller. The supply fan variable frequency drive will be utilized to maintain 1.25" w.c.

Return fan control: The Siebe controller will utilize the variable frequency drive to maintain differential cfm between the supply and return.

Unoccupied Mode:

Temporary Override: A momentary push button switch will activate if required, the HVAC system to enter warm-up cycle, then when building has warmed up, shall switch to day cycle for duration of 2 hours or as set.

A freeze protection thermostat located on the discharge side of the heating coil will stop the supply and return fans if 40 degree discharge air is sensed. A alarm will be generated to the Siebe automation system.

A duct smoke detector thru the fire alarm system will shutdown the air handler upon detection of smoke.

Exhaust fan 1: Exhaust fan will be on during occupied mode of AHU-1 and off during unoccupied mode of AHU-1.

MISC. REVISIONS: 12-17-98

SIEBE ENVIRONMENTAL CONTROLS

SIEBE ENVIRONMENTAL CONTROLS
3915 E. MAIN
SPOKANE, WA. 99202

DESCRIPTION: AHU-1

JOB NAME	SQUAD OPS/AMU
LOCATION	F.A.F.B. SPOKANE, WA.
ARCHITECT	WLA PS
ENGINEER	WOOD / HARBINGER INC.
CONTRACTOR	SMK MECHANICAL
ENGR'D BY	R.RHODES
CHECKED BY	
PROJECT NO.	
DRAWN BY	D.S.

DRAWING NO. 98004-2

DATE 2-19-98 SHEET 2 OF 7

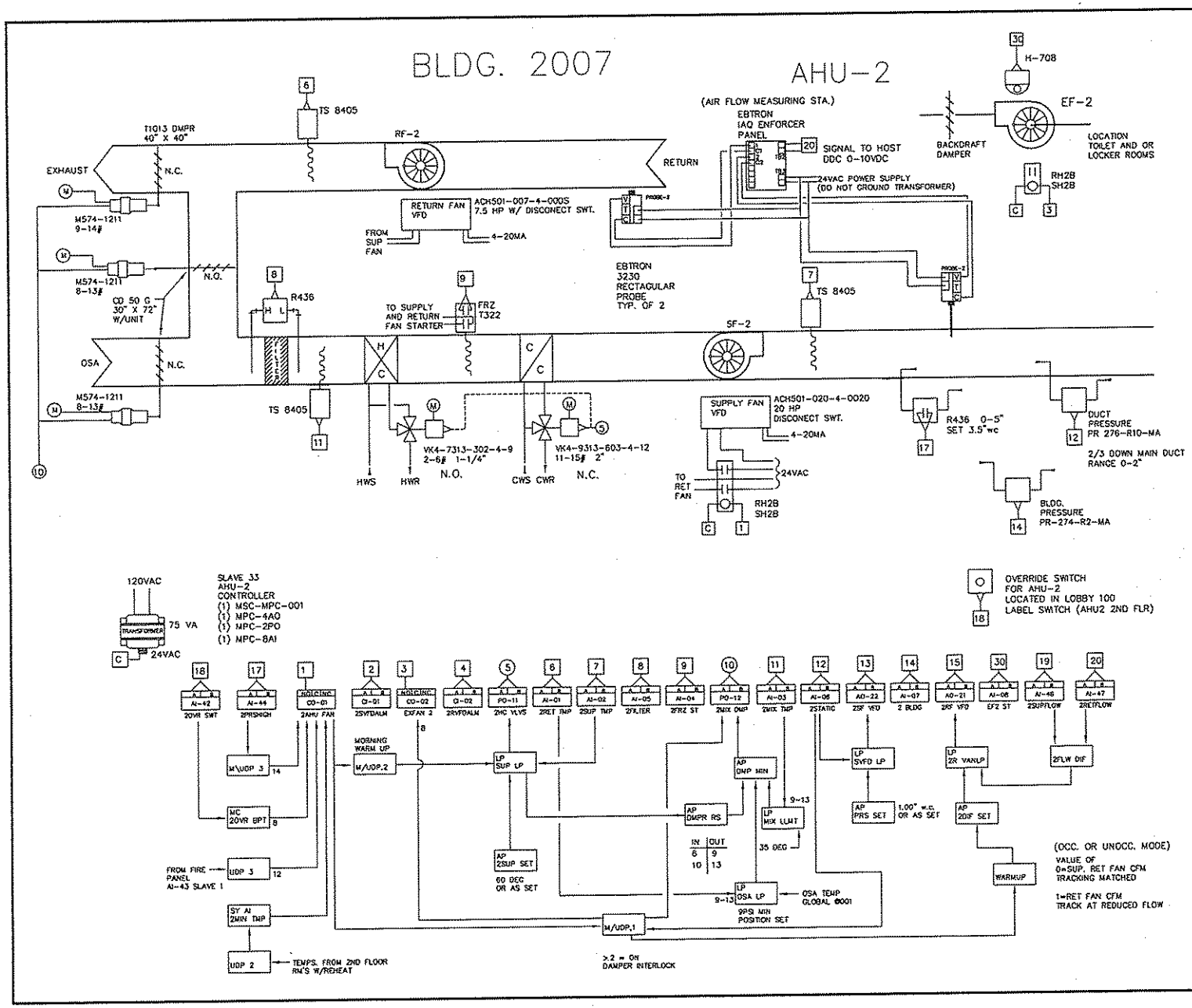

Sequence of operation AHU-2 / RF-2:

The Siebe automation control system will utilize optimal start, occupied and unoccupied modes of control.

Optimal start/warm-up mode: The Siebe automation system will calculate the outside air temp. and the space temperature to start the fan systems to bring the space temperatures up to occupied setpoint at the latest possible time.

During optimal start/warm-up the dampers will be positioned to full recirculation, variable frequency controlling to duct static pressure, the cooling valve in full bypass with the associated exhaust fans off and primary dampers of vav dampers open 100%.
Supply air shall be set at 80 deg.

Occupied mode: The supply and return fans will operate continuously with the dampers positioned to minimum outside air as set thru by balancing contractor. The heating valve, oso/return/relief dampers and cooling valve will modulate in sequence to maintain 60 degree supply air temperature. A call for heating will modulate the heating valve open with the dampers positioned to minimum. A call for cooling will modulate the dampers from minimum to 100% outside air, a further call for cooling will modulate the cooling valve open. The dampers will be positioned to minimum when the outside air temperature is greater than the return air temperature. Supply air temperature shall be reset off OSA temperature.

OSA TEMP	SUPPLY TEMP
10 DEG OR LESS	70 DEG
55 DEG AND ABOVE	60 DEG

Ventilation mode: The Siebe controller will position dampers to maintain 5500 cfm minimum outside air during the ventilation mode.

Supply air static pressure control: A duct static pressure sensor located 2/3 down the longest supply duct run will signal the Siebe controller. The supply fan variable frequency drive will be utilized to maintain 1.00" w.c. or as set.

Return fan control: The Siebe controller will utilize the variable frequency drive to maintain differential cfm between the supply and return.

Unoccupied Mode:

Temporary Override: A momentary push button switch will activate if required, the HVAC system to enter warm-up cycle, then when building has warmed up, shall switch to day cycle for duration of 2 hours or as set.

A freeze protection thermostat located on the discharge side of the heating coil will stop the supply and return fans if 40 degree discharge air is sensed. A alarm will be generated to the Siebe automation system.

A duct smoke detector thru the fire alarm system will shutdown the air handler upon detection of smoke.

Exhaust fan 2: Exhaust fan will be on during occupied mode of AHU-2 and off during unoccupied mode of AHU-2.

MISC. REVISIONS: 12-17-98

SIEBE ENVIRONMENTAL CONTROLS

SIEBE ENVIRONMENTAL CONTROLS
3915 E. MAIN
SPOKANE, WA. 99202

DESCRIPTION AHU-2

JOB NAME	SQUAD OPS/AMU
LOCATION	F.A.F.B. SPOKANE, WA.
ARCHITECT	WJA PS
ENGINEER	WOOD / HARBINGER INC.
CONTRACTOR	SMK MECHANICAL
ENGR'D BY	R.RHODES
CHECKED BY	
PROJECT NO.	
DRAWN BY	D.S.

DRAWING NO. 98004-3

DATE 2-19-98 SHEET 3 OF 7

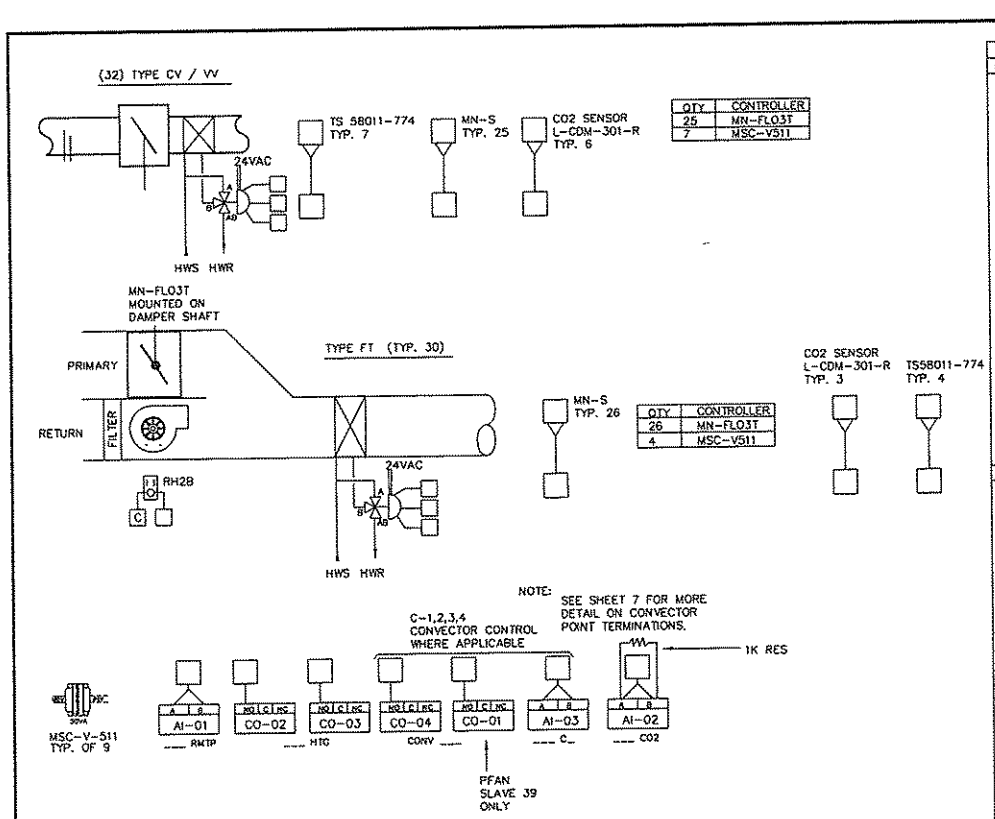

VAV VALVE AND CONTROLLER SCHEDULE

ROOM#	BOX	TYPE	VALVE	CONTROLLER	CO2 req'd	VALVE
113	8"	VV	VF 7213-252-4-1	MN-FLO	NO	
112	12"	FT	VF 7313-252-4-4	MN-FLO3T	NO	3-WAY
115	6"	CV	VF 7213-252-4-1	MN-FLO3T	NO	
115A	12"	FT	VF 7213-252-4-2	MN-FLO3T	NO	
103	6"	VV	VF 7213-252-4-1	MN-FLO3T	NO	
118	10"	VV	VF 7213-252-4-2	MSC-V511	YES	(FT-1)
123A	6"	VV	VF 7213-252-4-1	MN-FLO3T	NO	
123	6"	VV	VF 7213-252-4-1	MN-FLO3T	NO	
123	6"	VV	VF 7213-252-4-1	MN-FLO3T	NO	
125	10"	FT	VF 7213-252-4-2	MN-FLO3T	NO	
125B	6"	FT	VF 7213-252-4-1	MN-FLO3T	NO	
126	8"	VV	VF 7213-252-4-1	MN-FLO3T	NO	
129	6"	VV	VF 7213-252-4-1	MN-FLO3T	NO	
126C	6"	VV	VF 7213-252-4-1	MN-FLO3T	NO	
127	6"	VV	VF 7213-252-4-1	MSC-V511	YES	
127B	8"	FT	VF 7213-252-4-2	MN-FLO3T	NO	
127C	8"	FT	VF 7213-252-4-2	MN-FLO3T	NO	
127E	8"	FT	VF 7213-252-4-2	MN-FLO3T	NO	
128	10"	FT	VF 7213-252-4-2	MN-FLO3T	NO	
132	8"	FT	VF 7213-252-4-2	MN-FLO3T	NO	
130A	6"	CV	VF 7213-252-4-2	MN-FLO3T	NO	
131A	8"	CV	VF 7213-252-4-2	MN-FLO3T	NO	
101	6"	VV	VF 7213-252-4-1	MN-FLO3T	NO	
105	8"	FT	VF 7213-252-4-2	MN-FLO3T	NO	
106	8"	FT	VF 7213-252-4-2	MN-FLO3T	NO	
107	8"	FT	VF 7213-252-4-2	MN-FLO3T	NO	
108EAST	8"	VV	VF 7213-252-4-2	MSC-V511	YES	
108WEST	8"	VV	VF 7213-252-4-2	MSC-V511	YES	
111	12"	FT	VF 7313-252-4-2	MSC-V511	NO	3-WAY
106A	6"	VV	VF 7213-252-4-1	MN-FLO3T	NO	
102	8"	VV	VF 7213-252-4-1	MN-FLO3T	NO	
120	6"	CV	NO	MN-FLO3T	NO	
104	6"	VV	VF 7213-252-4-1	MN-FLO3T	NO	
ROOM#	BOX	TYPE	VALVE	CONTROLLER	CO2 req'd	VALVE
210A	6"	FT	VF 7313-252-4-2	MN-FLO3T	NO	3-WAY
210C	10"	FT	VF 7213-252-4-2	MN-FLO3T	NO	
210E	10"	VV	VF 7213-252-4-1	MN-FLO3T	NO	
210	10"	FT	VF 7213-252-4-2	MN-FLO3T	NO	
212	12"	FT	VF 7213-252-4-2	MN-FLO3T	NO	
217	6"	CV	VF 7213-252-4-1	MN-FLO3T	NO	
215	10"	FT	VF 7213-252-4-2	MN-FLO3T	NO	
204	6"	CV	VF 7213-252-4-1	MN-FLO3T	NO	
221	10"	FT	VF 7213-252-4-2	MN-FLO3T	NO	
220	6"	VV	VF 7313-252-4-1	MN-FLO3T	NO	
218	6"	CV	VF 7213-252-4-1	MN-FLO3T	NO	
211	8"	VV	VF 7213-252-4-1	MSC-V511	YES	
203	6"	VV	VF 7213-252-4-1	MN-FLO3T	NO	
208	6"	VV	VF 7213-252-4-2	MN-FLO3T	NO	
224F	8"	VV	VF 7213-252-4-1	MN-FLO3T	NO	
205	6"	VV	VF 7213-252-4-1	MN-FLO3T	NO	
223	8"	FT	VF 7213-252-4-2	MN-FLO3T	NO	
224B	8"	VV	VF 7213-252-4-1	MSC-V511	YES	(FT-3)
224D	8"	FT	VF 7213-252-4-2	MN-FLO3T	NO	
224	8"	VV	VF 7213-252-4-1	MN-FLO3T	NO	
224A	8"	FT	VF 7213-252-4-2	MN-FLO3T	NO	
225	8"	FT	VF 7213-252-4-2	MN-FLO3T	NO	
206A	6"	FT	VF 7213-252-4-1	MN-FLO3T	NO	
206	12"	FT	VF 7213-252-4-2	MSC-V511	YES	
206	12"	FT	VF 7213-252-4-2	MSC-V511	YES	(FT-2)
206	12"	FT	VF 7213-252-4-2	MSC-V511	YES	
209	10"	FT	VF 7213-252-4-2	MN-FLO3T	NO	
209A	8"	FT	VF 7213-252-4-2	MN-FLO3T	NO	
209B	6"	FT	VF 7313-252-4-2	MN-FLO3T	NO	3-WAY

Sequence of operation space temperature control:

VAV boxes: During the occupied mode the damper will modulate to maximum cfm on a call for cooling. On a drop in space temperature the damper will modulate to minimum cfm, a further drop in space temperature the heating control valve will open. Heating setpoint 68 degree, cooling setpoint 74 degrees.

Fan powered (series) boxes: During the warm-up / optimal start and occupied modes the fan will run continuously. The damper will modulate from minimum cfm to maximum cfm on a call for cooling to maintain cooling setpoint. On a drop in space temperature the damper will modulate to minimum cfm, a further drop in space temperature the heating control valve will open. Heating setpoint 68 degrees, cooling setpoint 75 degrees. During the unoccupied mode the fan will start and the heating control valve will open when space temperature falls to 55 degrees. Unit will continue to operate in full heating until temperature rises to 60 degrees.

Fan powered (parallel) boxes: During the occupied mode the damper will modulate from minimum cfm to maximum cfm on a call for cooling to maintain cooling setpoint. On a drop in space temperature the damper will modulate to minimum cfm, a further drop in space temperature the fan will start and the heating control valve will open. Heating setpoint 68 degrees, cooling setpoint 75 degrees. During the unoccupied mode the fan will start and the heating control valve will open when space temperature falls to 55 degrees. Unit will continue to operate in full heating until temperature rises to 60 degrees.

Terminal unit ventilation control (see control drawing for schedule): During the occupied mode the Siebe automation will monitor the co2 levels as indicated. Upon a rise in co2 level the damper will modulate open to maximum cfm per the following schedule:

Space co2 level (ppm)	Terminal unit damper
Below 700	Under space temp. control
1000	Maximum cfm

The damper will modulate linearally between the indicated co2 levels. The terminal unit will control to maintain 68 degree heating setpoint during co2 override.

WIRING DETAIL OF FIN-TUBE VALVE TIED INTO RM. VAV BOX CONTROL
APPLICABLE ON
SLAVE 39 RM-224B FT3 /DO-01 FOR PARR. FAN
SLAVE 5 RM-118 FT1 /DO-1-4 FOR C2

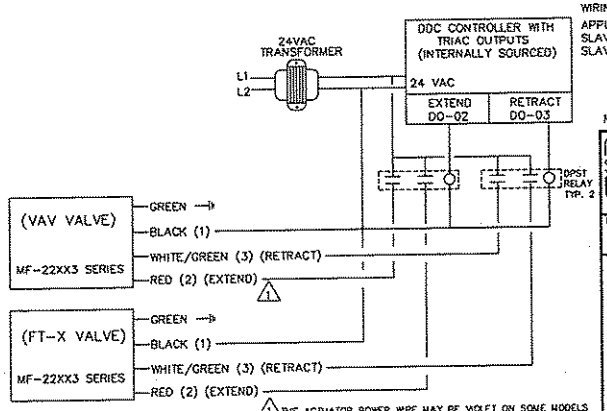

BLDG. 2007

MISC. REVISIONS: 8-31-98

SIEBE ENVIRONMENTAL CONTROLS
SIEBE ENVIRONMENTAL CONTROLS
3915 E. MAIN
SPOKANE, WA. 99202

DESCRIPTION: VAV BOXES

JOB NAME	SQUAD OPS/AMU
LOCATION	F.A.F.B. SPOKANE, WA.
ARCHITECT	WJA PS
ENGINEER	WOOD / HARBINGER INC.
CONTRACTOR	SMK MECHANICAL
ENGR'D BY	R.RHODES
CHECKED BY	
PROJECT NO.	965-98004-34
DRAWN BY	D.S.

DRAWING NO. 98004-4
DATE 2-19-98 SHEET 4 OF 7

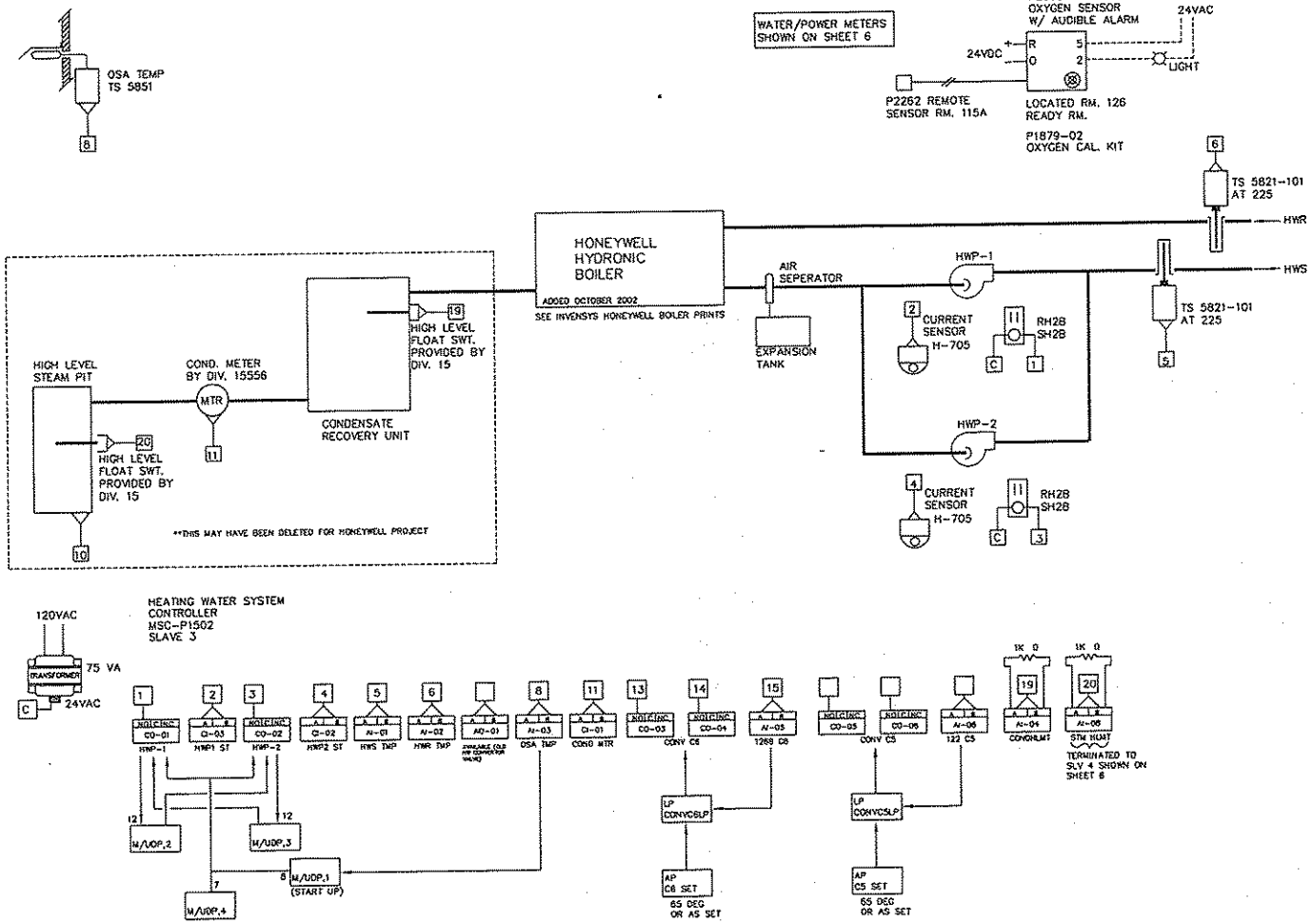

Sequence of operation Heating Water System:

Steam to HW convertor has been removed. A Honeywell maintains hydronic boiler now provides the heating medium. See Invensys Honeywell prints for more info.

Hot water pumps shall have a minimum on time of 30 minutes. When hot water pumps status is off the steam valve shall be closed.

The Siebe automation system will energize the lead heating water pump below 65 degrees osa temperature. Upon failure of the lead heating pump the lag heating water pump will be energized after a delay (60 seconds) as programmed thru the Siebe system.

The lead heating water pump will be alternated weekly based on run-time.
Sequence of operation Convectors: Siebe will control the heating valve to maintain 65 degree occupied space temperature and 55 degree unoccupied space temperature.

Siebe will monitor the electrical demand meter.
Siebe will monitor the water meter.
Siebe will monitor the condensate meter

Siebe will monitor the oxygen level in Room 115A (oxygen bottle maintenance room). Upon high oxygen level, an audible and visual alarm (with silence switch) will activate in the ready room 126. An auxiliary visual alarm will be activated near the entrance to the oxygen bottle maintenance room.

BLDG. 2007

5/15/03 - REMOVED HW CONVERTOR - ADDED BOILER - MZ

SIEBE ENVIRONMENTAL CONTROLS

SIEBE ENVIRONMENTAL CONTROLS
3915 E. MAIN
SPOKANE, WA. 99202

DESCRIPTION
BOILERHEATING WATER SYSTEM - BLDG 2007

JOB NAME	SQUAD OPS/AMU
LOCATION	F.A.F.B. SPOKANE, WA.
ARCHITECT	WJA PS
ENGINEER	WOOD / HARBINGER INC.
CONTRACTOR	SMK MECHANICAL
ENGR'D BY	R.RHODES
CHECKED BY	
PROJECT NO.	965-98004-34
DRAWN BY	D.S.
DRAWING NO.	98004-5
DATE	2.19.96
SHEET	5 OF 6

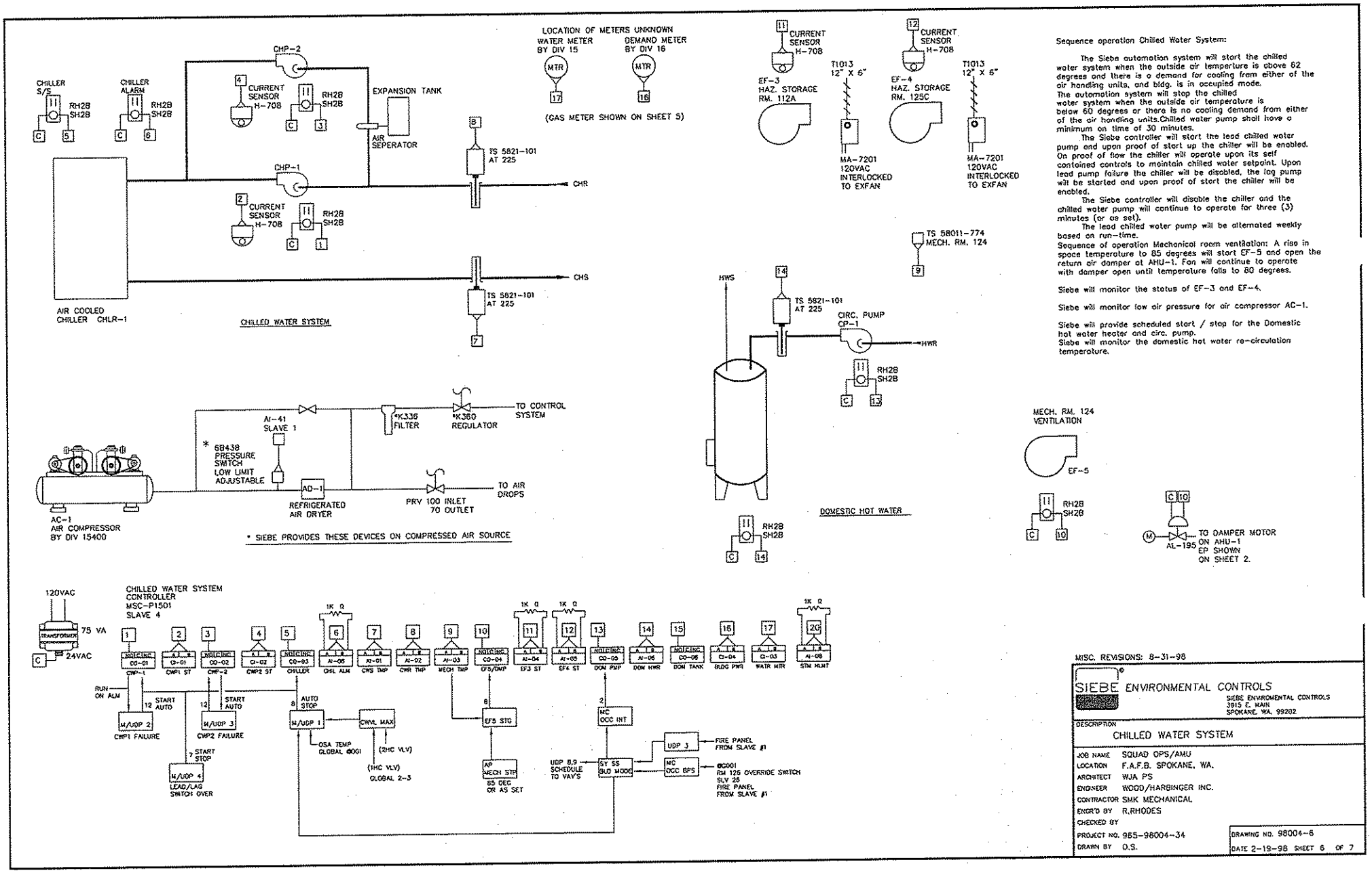

Sequence operation Chilled Water System:

The Siebe automation system will start the chilled water system when the outside air temperture is above 62 degrees and there is a demand for cooling from either of the air handling units, and bldg. is in occupied mode.
The automation system will stop the chilled water system when the outside air temperature is below 60 degrees or there is no cooling demand from either of the air handling units.Chilled water pump shall have a minimum on time of 30 minutes.

The Siebe controller will start the lead chilled water pump and upon proof of start up the chiller will be enabled. On proof of flow the chiller will operate upon its self contained controls to maintain chilled water setpoint. Upon lead pump failure the chiller will be disabled, the lag pump will be started and upon proof of start the chiller will be enabled.

The Siebe controller will disable the chiller and the chilled water pump will continue to operate for three (3) minutes (or as set).

The lead chilled water pump will be alternated weekly based on run-time.

Sequence of operation Mechanical room ventilation: A rise in space temperature to 85 degrees will start EF-5 and open the return air damper at AHU-1. Fan will continue to operate with damper open until temperature falls to 80 degrees.

Siebe will monitor the status of EF-3 and EF-4.

Siebe will monitor low air pressure for air compressor AC-1.

Siebe will provide scheduled start / stop for the Domestic hot water heater and circ. pump.
Siebe will monitor the domestic hot water re-circulation temperature.

MISC. REVISIONS: 8-31-98

SIEBE ENVIRONMENTAL CONTROLS

SIEBE ENVIROMENTAL CONTROLS
3915 E. MAIN
SPOKANE, WA. 99202

DESCRIPTION: CHILLED WATER SYSTEM

JOB NAME	SQUAD OPS/AMU
LOCATION	F.A.F.B. SPOKANE, WA.
ARCHITECT	WJA PS
ENGINEER	WOOD/HARBINGER INC.
CONTRACTOR	SMK MECHANICAL
ENGR'D BY	R.RHODES
CHECKED BY	
PROJECT NO.	955-98004-34
DRAWN BY	D.S.

DRAWING NO. 98004-6
DATE 2-19-98 SHEET 6 OF 7

CONVECTOR	LOCATION	TERMINATION CONTROLLER	SLAVE #	REMARKS
C-1	WEST ENTRY	MSC-V-511	6	SLV W/ 108 EAST VAV
C-2	NORTH ENTRY	MSC-V-511	5	SLV W/ 118 VAV
C-3	EAST ENTRY	MSC-V-511	8	SLV W/ 127 VAV
C-4	SOUTH ENTRY	MSC-V-511	7	SLV W/ 108 WEST VAV
C-5	N.SIDE OUTER STORAGE	MSC-P1501	3	SLV W/ BOILER RM. CONTROLS
C-6	VESTIBULE	MSC-P1501	3	SLV W/ BOILER RM. CONTROLS

FIN TUBE	LOCATION	SLAVE	VALVE #
FT-1	RM. 118	5	VF 7213-252-4-1
FT-2	RM. 206C	36	VF 7213-252-4-2
FT-3	RM. 224B	39	VF 7213-252-4-1

Sequence of operation Convectors: Siebe will control the heating valve to maintain 65 degree occupied space temperature and 55 degree unoccupied space temperature.

Sequence of operation Fin-Tubes: Siebe will control Fin-Tube valve in sequence with VAV heating valve, both VAV heating valve and Fin-Tube valve shall control off some room sensor located in the area served.

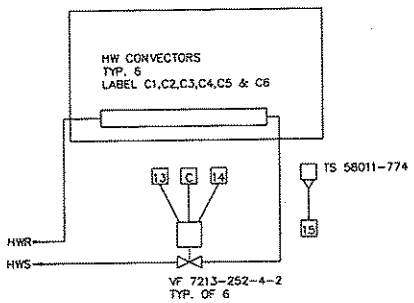

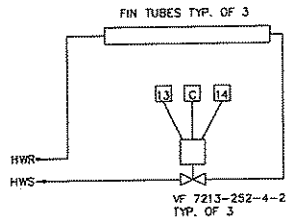

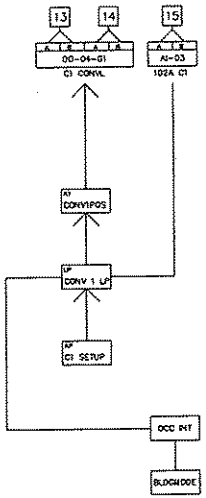

BLDG. 2007

MISC. REVISIONS: 8-31-98

SIEBE ENVIRONMENTAL CONTROLS

SIEBE ENVIRONMENTAL CONTROLS
3915 E. MAIN
SPOKANE, WA. 99202

DESCRIPTION
POWER MONITORING C2, C5, C6

JOB NAME SQUAD OPS/AMU
LOCATION F.A.F.B. SPOKANE, WA.
ARCHITECT WJA PS
ENGINEER WOOD / HARBINGER INC.
CONTRACTOR SMK MECHANICAL
ENGR'D BY R.RHODES
CHECKED BY
PROJECT NO. 965-98004-34
DRAWN BY D.S.

DRAWING NO. 98004-7
DATE 2-19-98 SHEET 7 OF 7

REVISIONS

SYMBOL	ZONE	DESCRIPTION	DATE	BY
A	5-4/5	EF-3 CAPACITY INCREASED	20MAY98	GCH
		REVISED AS-BUILT	11DEC98	JPK

AIR HANDLING UNIT – FAN AND FILTER SCHEDULE

EQUIP NO.	ARRGT/ DISCHARGE	MINIMUM OSA CFM (3)	FAN SECTION: AIRFLOW CFM (4)	FAN SECTION: EXT SP IN WG (1)	FAN SECTION: WHEEL DIA IN	FAN SECTION: MAX BHP	FAN SECTION: MOTOR HP	FILTER: TYPE	FILTER: EFF, %	FILTER: MAX FV FPM	FILTER: PD IN WG CLEAN	FILTER: PD IN WG FINAL (2)	REMARKS
AHU-1	AF/PLUG/SWSI	8,500	18,000	4.0	33	15	20	PLEATED THROWAWAY	30	300	0.2	0.80	VARIABLE SPEED DRIVE
AHU-2	AF/PLUG/SWSI	5,900	17,000	4.0	33	17.3	20	PLEATED THROWAWAY	30	330	0.2	0.60	VARIABLE SPEED DRIVE

NOTES:
(1) EXTERNAL TO FAN SECTION CABINET. NOT INCLUDING CABINET LOSSES.
(2) DESIGN CHANGE-OUT POINT.
(3) MINIMUM OSA CFM BASED ON MAXIMUM UNIT AIR FLOW
(4) AIRFLOWS, BHP AND PD BASED UPON FAIRCHILD AFB, WA. (ELEVATION 2462 FT)

AIR HANDLING UNIT – COIL SCHEDULE

EQUIP NO	AIRFLOW CFM (1)	CHILLED WATER COIL (2): EAT °F DB	EAT °F WB	LAT °F DB	LAT °F WB	MAX FV FPM	MAX AIR PD IN WG	H2O FLOW GPM	ENT °F	LVT °F	MAX H2O PD FT HD	HOT WATER COIL (3): EAT °F	LAT °F	MAX FV FPM	MAX AIR PD IN WG	FLOW GPM (3)	ENT °F	LVT °F	MAX H2O PD FT HD	REMARKS
AHU-1	18,000	54	66.2	58	57	500	0.8	110	45	54	16.2	40	60	550	0.10	35	180	150	1.5	
AHU-2	17,000	54	66.2	57.6	56.6	500	0.8	117	45	51.4	19.0	40	60	500	0.10	37	180	150	1.2	

NOTES:
(1) AIRFLOW AND PD BASED UPON FAIRCHILD AFB, WA. (ELEVATION 2462 FT) (2) 40% PROPYLENE GLYCOL BY WEIGHT. (3) 30% PROPYLENE GLYCOL BY WEIGHT.

AIR TERMINAL UNIT SCHEDULE

EQUIP NO	TYPE (1)	AIRFLOW RANGE CFM (2)	INLET SIZE (6): AT UNIT, IN	INLET SIZE (6): RUNOUT DUCT, IN	OUTLET SIZE, IN (6)	MAX SP DROP IN WG (5)	HEATING COIL: EAT	HEATING COIL: ENT	HEATING COIL: MAX H2O PD FT	FAN: MOTOR HP	FAN: EXT SP IN WC (7)	FAN: MAX CFM	DISCH NC RATING (4)	REMARKS
6	V V OR CV	0 TO 400	6"ø	8"ø	10x10	0.10	60	180	2.0	–	–	–	30	
8	V V OR CV	401 TO 800	8"ø	10"ø	12x12	0.10	60	180	2.0	–	–	–	30	
10	V V OR CV	801 TO 1,200	10"ø	12"ø	16x14	0.10	60	180	2.0	–	–	–	30	
12	V V OR CV	1,201 TO 1,800	12"ø	14"ø	20x14	0.10	60	180	3.0	–	–	–	25	
6	FT	0 TO 400	6"ø	8"ø	10x10	0.20	60	180	2.0	1/10	0.30	(3)	20	
8	FT	401 TO 800	8"ø	10"ø	12x12	0.20	60	180	2.0	1/4	0.30	(3)	28	
10	FT	801 TO 1,199	10"ø	12"ø	16x14	0.15	60	180	2.0	1/4	0.30	(3)	29	
12	FT	1,200 TO 1,800	12"ø	14"ø	20x14	0.12	60	180	3.0	1/3	0.30	(3)	34	

NOTES:
1. FT = FAN POWERED UNIT (PARALLEL); V V = VARIABLE VOLUME UNIT; CV = CONSTANT VOLUME UNIT.
2. INDIVIDUAL TERMINAL UNIT MAX (COOLING CYCLE) AND MIN. (HEATING CYCLE) PRIMARY AIR FLOWS ARE INDICATED AT EACH UNIT ON FLOOR PLANS.
3. PARALLEL FAN TERMINAL: DURING THE HEATING CYCLE, FAN CFM SHALL BE A NOMINALLY 50% OF THE MAXIMUM PRIMARY AIR FLOW AS INDICATED ON THE FLOOR PLANS EXCEPT FOR UNITS SERVING ROOMS 111, 112 AND 125; THESE UNITS SHALL HAVE FANS SIZED FOR 100 PERCENT OF THE PRIMARY AIRFLOW.
4. DISCHARGE NC BASED ON MAX AIR FLOW, 3" DIFFERENTIAL STATIC PRESSURE, 5FT LINED DUCT, 6FT OF FLEXIBLE DUCT AND LINEAR DIFFUSER.
5. STATIC PRESSURE INCLUDES TERMINAL UNIT ONLY.
6. SUPPLY AIR DUCTWORK BASED UPON THESE NOMINAL INLET / OUTLET SIZES.
7. STATIC PRESSURE EXCLUDES TERMINAL UNIT.
8. FOR TERMINAL UNIT COIL PIPING CONNECTIONS, SEE DETAIL 5/M2.2|M2.5. ALSO REFER TO FAN POWERED TERMINAL DETAIL 1/M2.2|M2.5
9. HEATING WATER SYSTEM = PROPYLENE GLYCOL 30% BY VOLUME
10. HEATING WATER FLOW RATES FOR UNITS SERVING ROOMS 111, 112 AND 115 TO BE INCREASED BY 1 GPM OVER SCHEDULED FLOWS.

SOUND ATTENUATOR SCHEDULE

EQUIP. NO.	SERVICE	TYPE	LENGTH IN.	MAX FV FPM	DUCT SIZE, IN.	MAX PD IN WG	MINIMUM REQUIRED ACOUSTIC RATING dB RE 10⁻¹² W, OCTAVE BAND CENTER FREQUENCY HZ: 63	125	250	500	1000	2000	4000	8000	REMARKS
SA-1	AHU-1	RECTANGULAR	36	1100	30x72	0.25	5	7	16	19	17	12	10	10	
SA-2	AHU-2	RECTANGULAR	36	1150	30x72	0.25	5	7	16	19	17	12	10	10	
SA-3	RF-1, RF-2	RECTANGULAR	36	2000	FAN SIZE	0.1	2	9	16	18	19	14	10	10	

FAN SCHEDULE

EQUIP NO	SERVICE	TYPE	WHEEL DIA. (IN)	ARRGT/ DISCHARGE	AIRFLOW CFM (2)	EXT SP IN WG (2)	RPM	MAX BHP (2)	MOTOR HP	DRIVE	REMARKS
EF-1	FIRST FLOOR EXHAUST	IN-LINE	13	HORIZ/HORIZ	1,250	0.75	1,500	0.35	1/2	BELT	
EF-2	SECOND FLOOR EXHAUST	IN-LINE	13	HORIZ/HORIZ	1150	0.625	1,475	0.26	1/3	BELT	
EF-3	HAZ STOR 112A	CENTRIFUGAL BLOWER	10	HORIZ/HORIZ	400	0.25	2,000	0.13	1/3	BELT	EXPLOSION PROOF (A)
EF-4	HAZ STOR 125C	CENTRIFUGAL BLOWER	8	HORIZ/HORIZ	200	0.25	1,200	0.04	1/3	DIRECT	EXPLOSION PROOF
EF-5	MECHANICAL 124	PROP	14	HORIZ/HORIZ	900	0.25	1,160	–	1/8	DIRECT	
RF-1	AHU-1	VANEAXIAL	36	HORIZ/HORIZ	14,000	1.5 (1)	1,170	4.5	7-1/2	DIRECT	VARIABLE SPEED DRIVE
RF-2	AHU-2	VANEAXIAL	36	HORIZ/HORIZ	16,250	1.5 (1)	1,170	5.3	7-1/2	DIRECT	VARIABLE SPEED DRIVE

NOTES:
(1) TOTAL PRESSURE
(2) AIRFLOW EXT SP/TP AND BHP BASED ON FAIRCHILD AFB, WA. (ELEVATION 2462 FT)

AIR COOLED CHILLER SCHEDULE

EQUIP NO	TOTAL CAPACITY TONS	EVAPORATOR: H_2O FLOW GPM (1)	EVAPORATOR: ENT °F	EVAPORATOR: LVT °F	EVAPORATOR: PD FT H_2O (1)	AMBIENT DB TEMP, °F	FANS: NO	FANS: TYPE	FANS: MOTOR (S) HP, EA	MAX INPUT KW	EER	MINIMUM CAPACITY STEPS	REMARKS
CHLR-1	62	227	55	45	15	93	10	PROPELLER	1	100	10.4	5	

NOTES:
(1) PROPYLENE GLYCOL 40% BY VOLUME (2) CAPACITY BASED ON FAIRCHILD AFB, WA. (ELEVATION 2462 FT)

FIN TUBE UNIT SCHEDULE

EQUIP NO	SERVICE	CAPACITY BTUH	ENT	H2O FLOW GPM	TUBE SIZE, IN	NO OF ROWS	FIN TUBE: SIZE IN-IN	FIN TUBE: LENGTH FT-IN	CABINET: LENGTH FT-IN	CABINET: WIDTH IN	CABINET: HEIGHT IN	REMARKS
FT-1	BREAK 115	4520	180	0.5	1	1	3.75x2.75	7-0	10-0	3.5	14	
FT-2	BRIEFING 206	16000	180	1.6	1	1	3.75x2.75	16-0	18-0	3.5	14	3-6' FIN TUBE ELEMENTS
FT-3	CONF 224E	5280	180	0.5	1	1	3.75x2.75	8-0	12-0	3.5	14	

NOTES:
(1) FOR FIN TUBE CONNECTION SEE DETAIL 10/M2.2|M2.5 (2) HEATING WATER SYSTEM 30% PROPYLENE GLYCOL BY VOLUME.

EQUIPMENT SOUND POWER LEVEL AND ISOLATOR SCHEDULE

EQUIP. NO.	MAX SOUND POWER LEVEL dB RE 10⁻¹² W, OCTAVE BAND CENTER FREQUENCY HZ: 63	125	250	500	1000	2000	4000	8000	VIBRATION ISOLATOR: TYPE	MIN STATIC DEFLECTION, IN.
AHU-1 (OUTLET)	91	89	89	83	79	74	70	71	(1)	0.75
AHU-2 (OUTLET)	91	89	89	83	79	74	70	71	(1)	2.5
RF-1	85	88	92	92	89	84	79	78	(2)	2.5
RF-2	87	90	94	94	91	86	81	80	(2)	2.5
EF-1	84	76	72	71	65	63	58	52	(2)	0.75
EF-2	83	74	66	63	57	57	50	43	(2)	0.75
AC-1	-	-	-	-	-	-	-	-	(3)	0.75
HWP-1,2	-	-	-	-	-	-	-	-	(3)	0.75
CHP-1,2	-	-	-	-	-	-	-	-	(3)	0.75
FT/SFT	-	-	-	-	-	-	-	-	(4)	0.25
CHLR-1	104	95	97	95	94	93	89	87	-	-

NOTES:
(1) INTERNALLY ISOLATED WITH SEISMICALLY RESTRAINED SPRING ISOLATORS.
(2) SPRING HANGERS
(3) INERTIA BASE WITH SPRING ISOLATORS AND SEISMIC SNUBBERS.
(4) NEOPRENE HANGERS

STEAM CONVERTOR SCHEDULE

EQUIP NO	TYPE	TUBE SIDE (HOT WATER): FLOW GPM	ENT °F	LVT °F	MAX PD FT HD	SHELL SIDE (STEAM): INPUT LB/HR	PRESSURE PSIG	REMARKS
HX-1	U-TUBE	133	160	180	2	1300	2	

(1) HOT WATER: 30% PROPYLENE GLYCOL BY VOLUME.

AIR COMPRESSOR AND AIR DRYER SCHEDULE

EQUIP. NO.	SERVICE	TYPE	NOMINAL CAPACITY SCFM	MIN DELIVERY PRESS PSIG	CMPSR MOTOR HP	TANK GAL	REMARKS
AC-1	OXYGEN BOTTLE VAULT	RECIPROCATING	11	100	3	80	DUPLEX TANK MOUNTED
AD-1	AC-1	REFRIGERATED	11	-	1/3	-	CAPACITY AT 35-39F DEW POINT AND 100F ENTERING AIR

NOTE:
1. REFER TO PLUMBING PLATE P0.1 FOR ADDITIONAL SCHEDULES.

PUMP SCHEDULE

EQUIP NO	SERVICE	TYPE	FLOW GPM	TOTAL DYNAMIC HD FT H2O	RPM	MIN EFF %	MOTOR HP	REMARKS
HWP-1,2	HEATING WATER SYS	END SUCTION	133 (1)	55.0	1,750	67	5.0	
CHP-1,2	CHILLED WATER SYS	END SUCTION	227 (2)	65.0	1,750	75	7.5	
CR-1	CONDENSATE UNIT	CLOSE COUPLED	9	115.0	3,450	---	1-1/2	DUPLEX WITH 15 GALLON RECEIVER

NOTES:
(1) HEATING WATER SYSTEM – PROPYLENE GLYCOL 30% BY VOLUME (2) CHILLED WATER SYSTEM – PROPYLENE GLYCOL 40% BY VOLUME

CONVECTOR SCHEDULE

EQUIP. NO.	SERVICE	CAPACITY MBH	ENT	FLOW GPM(2)	SIZE: LENGTH FT-IN	SIZE: WIDTH IN	SIZE: HEIGHT IN	REMARKS
C-1	VESTIBULE 102A	10	180	1.5	48	6	32	
C-2	VESTIBULE 103A	10	180	1.5	48	6	32	
C-3	VESTIBULE 126A	10	180	1.5	48	6	32	
C-4	VESTIBULE 101A	10	180	1.5	48	6	32	
C-5	OUT STOR 122	8.3	180	1.0	48	6	32	
C-6	VESTIBULE 126B	10	180	1.5	48	6	32	

NOTE: (1) FOR CONVECTOR PIPING CONNECTIONS SEE DETAIL 9/M2.2|M2.5 (2) HEATING WATER SYSTEM – 30% PROPYLENE GLYCOL BY VOLUME

EXPANSION TANK SCHEDULE

EQUIP NO	SERVICE	TYPE	CAP GAL	ACCEPTANCE GALLONS	CHARGE PSIG	MAX SIZE, IN.: DIA	MAX SIZE, IN.: LENGTH/HEIGHT	REMARKS
ET-1	HEATING WATER SYSTEM	ASME, DIAPHRAGM	34	11	12	16	43	VERTICAL
ET-2	CHILLED WATER SYSTEM	ASME, DIAPHRAGM	4.7	2.4	20	12	19	HORIZONTAL

BLDG. 2007

IF SHEET IS LESS THAN 28" X 40" IT IS A REDUCED PRINT REDUCE SCALE ACCORDINGLY

WOOD/HARBINGER, INC. Consulting Engineers Bellevue, Washington

NBBJ ARCHITECTS-ENGINEERS SEATTLE, WASHINGTON

U.S. ARMY ENGINEER DISTRICT, SEATTLE CORPS OF ENGINEERS SEATTLE, WASHINGTON

MECHANICAL EQUIPMENT SCHEDULES

KC-135 SQUADRON OPERATIONS / AMU FACILITY, PN GJKZ010005 DWG

FAIRCHILD AFB WASHINGTON

F | 226c/113-15-05 | 22 SEP 97 | M3.2

AS-BUILT

REVISIONS				
SYMBOL	ZONE	DESCRIPTION	DATE	BY
A	B-3	DRYER VENT ADDED	20MAY99	GRH
B	C-3/C-4	DRYER VENT ADDED	20MAY99	GRH
C	C-2/4	BATHROOM DIFFUSERS AND GRILLES REVISED	20MAY99	GRH
D	3-C/D	GRILLE ADDED, DUCTS REVISED, TEMP SENSOR RELOCATED	20MAY99	GRH
		REVISED AS-BUILT	03OCT99	GRH

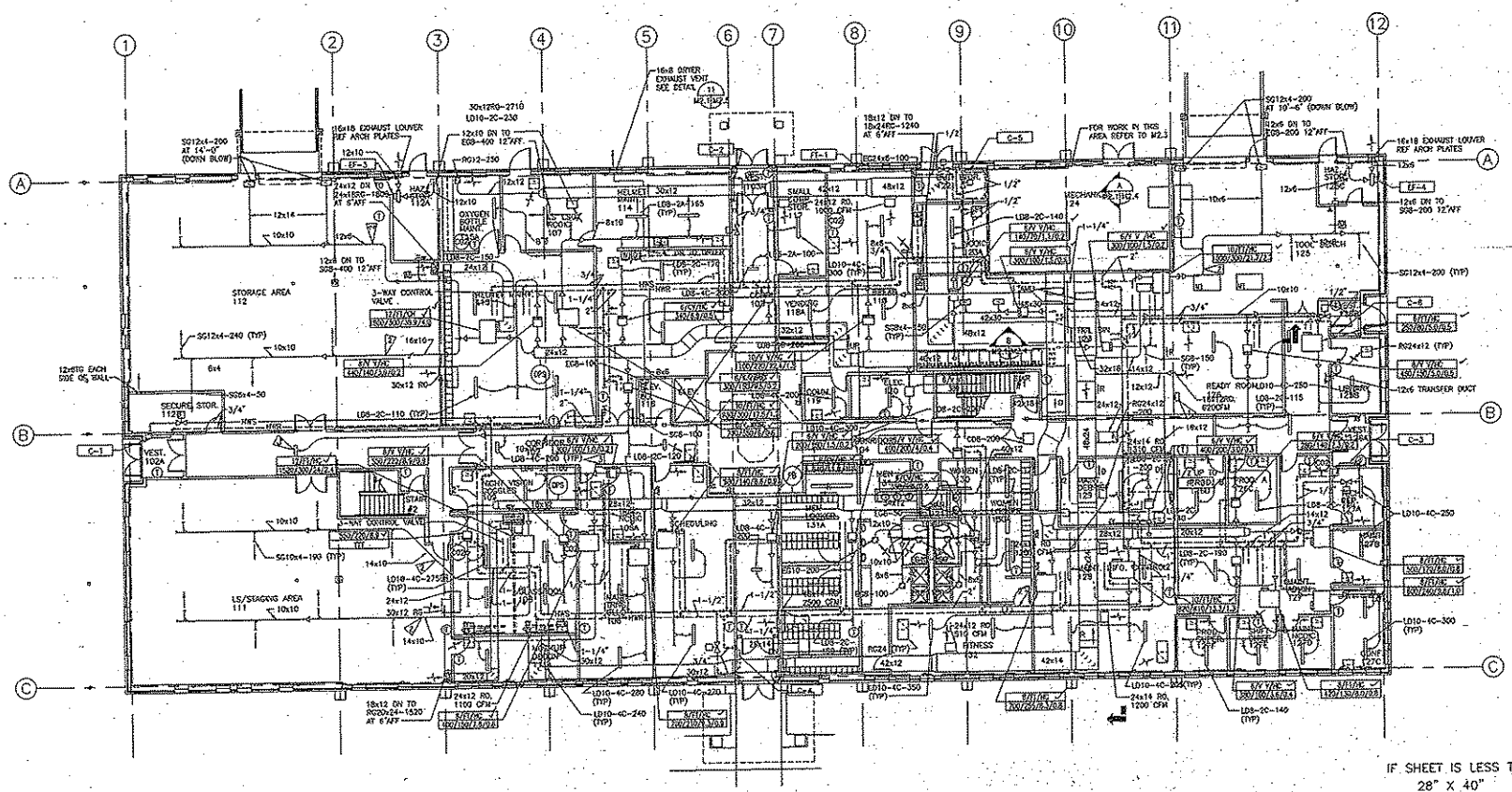

HVAC PLAN – FIRST FLOOR
SCALE: 1/8"=1'-0"

SHEET NOTES:
1. OXYGEN LEVEL MONITORING/ALARM PANEL FOR OXYGEN BOTTLE MANT. 115A.
2. BOTTOM OF DUCT AT 11'-4".
3. ALL CORRIDOR DIFFUSERS ARE 24" LONG.

NORTH

GRAPHIC SCALE: 0 2 4 8 15 24 feet 1/8"=1'-0"

IF SHEET IS LESS THAN 28" X 40" IT IS A REDUCED PRINT REDUCE SCALE ACCORDINGLY

WOOD / HARBERGER, INC. Consulting Engineers Bellevue, Washington

U.S. ARMY ENGINEER DISTRICT, SEATTLE CORPS OF ENGINEERS SEATTLE, WASHINGTON

HVAC PLAN
FIRST FLOOR
KC-135 SQUADRON OPERATIONS / AMU FACILITY, PN GJKZ010005

FAIRCHILD AFB WASHINGTON

DWG NO. 226s/113-15-05 SHEET M2.1

DATE 22 SEP 97

SHEET 36 OF 66

DWN GRH CHK PHD

BLDG. 2007

AS-BUILT

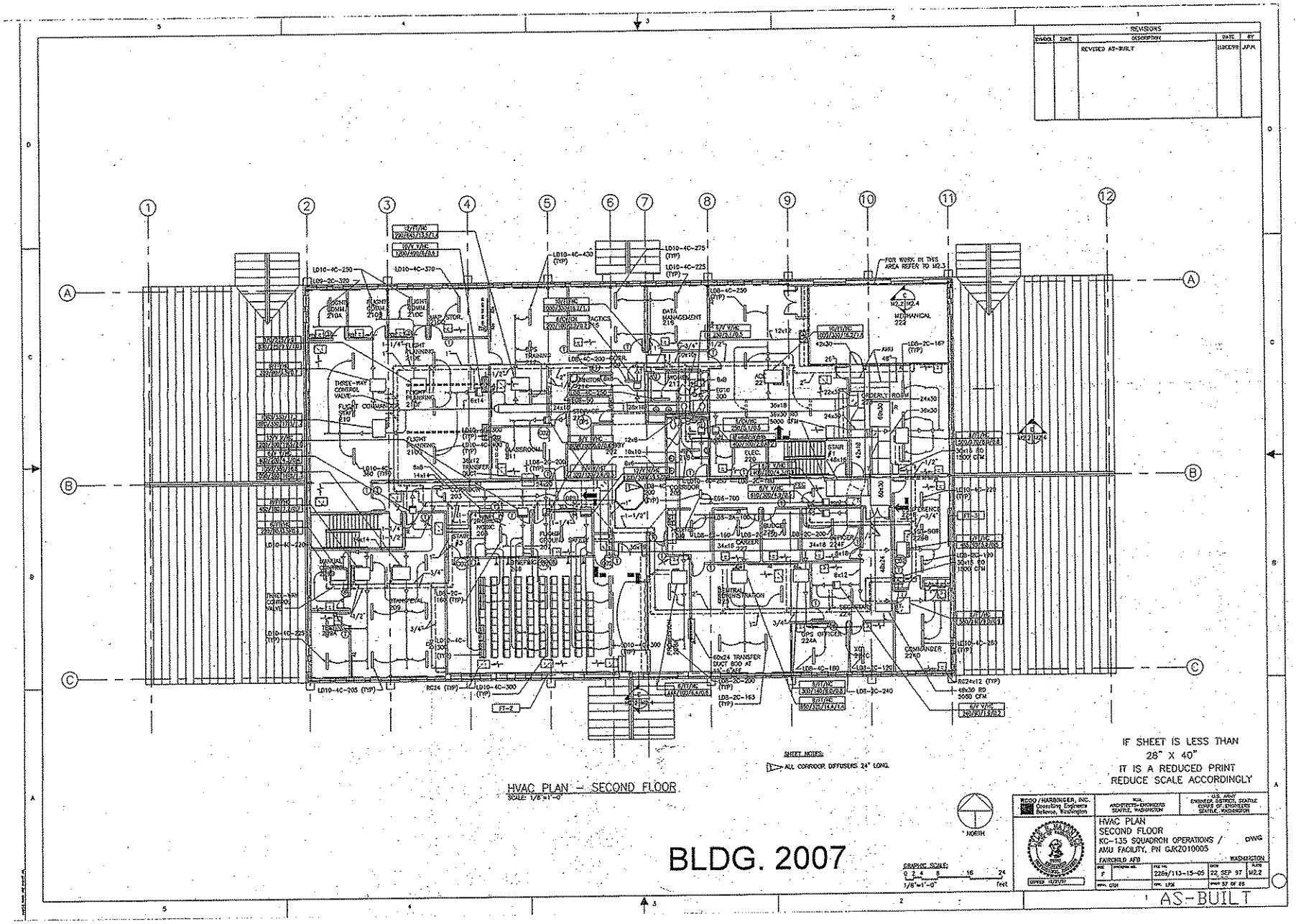
REVISIONS
REVISED AS-BUILT
HVAC PLAN - SECOND FLOOR
SCALE: 1/8"=1'-0"
SHEET NOTES:
ALL CORRIDOR DIFFUSERS 24" LONG.
IF SHEET IS LESS THAN
28" X 40"
IT IS A REDUCED PRINT
REDUCE SCALE ACCORDINGLY
NORTH
GRAPHIC SCALE:
1/8"=1'-0"
feet
RCGO/HARBINGER, INC.
Consulting Engineers
Bellevue, Washington
U.S. ARMY
ARCHITECTS-ENGINEERS
SEATTLE, WASHINGTON
U.S. ARMY
ENGINEER DISTRICT, SEATTLE
CORPS OF ENGINEERS
SEATTLE, WASHINGTON
HVAC PLAN
SECOND FLOOR
KC-135 SQUADRON OPERATIONS /
AMU FACILITY, PN GJKZ010005
FAIRCHILD AFB
WASHINGTON
DWG
22 SEP 97
M2.2
AS-BUILT

BLDG. 2007

REVISIONS				
SYMBOL	ZONE	DESCRIPTION	DATE	BY
		REVISED AS-BUILT	04/29/99	

NOTE: PROVIDE CORNER GUARDS TO ALL CORNERS IN CORRIDORS 101,102,103,104, LOBBY 100 AND READY ROOM 126.

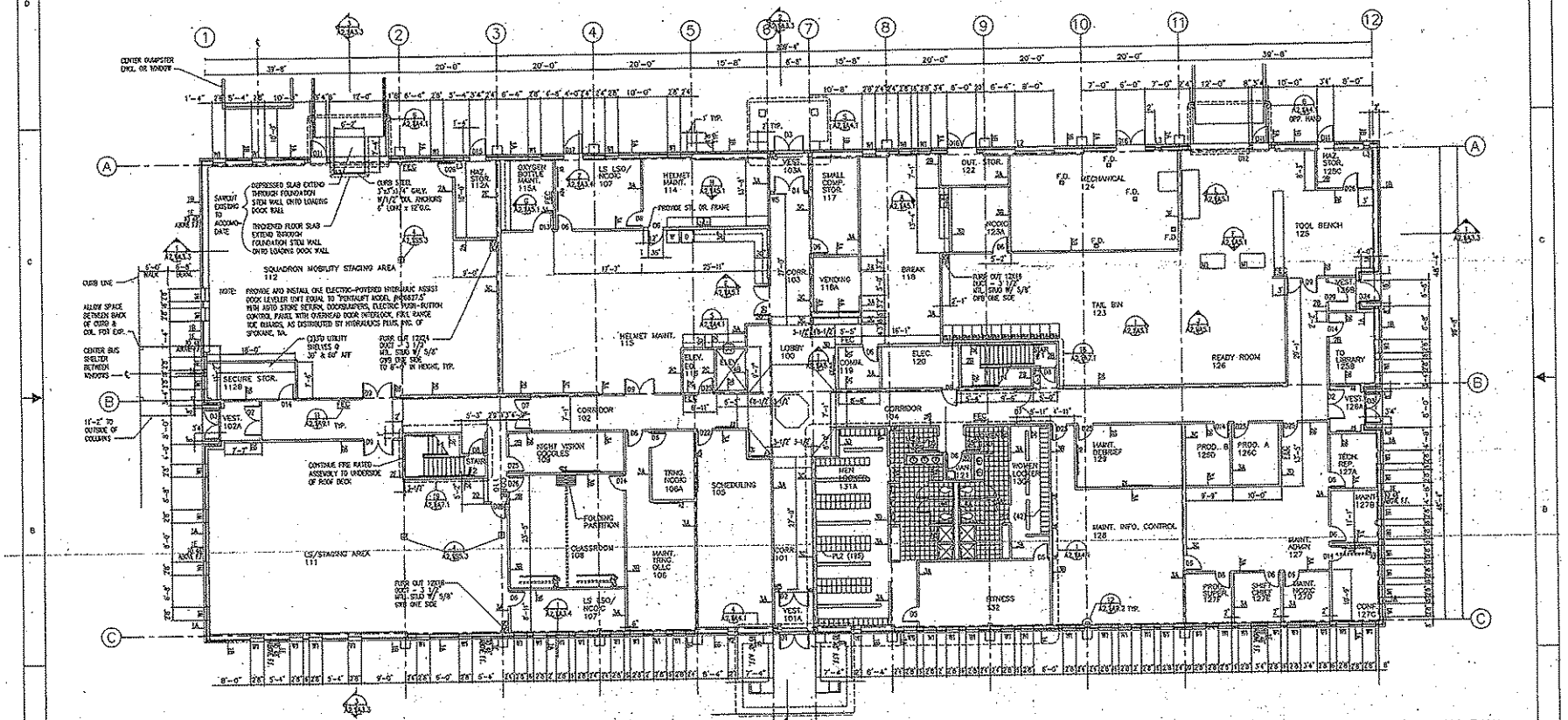

FIRST FLOOR PLAN

F.F. 100'-0"

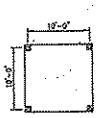

BUS SHELTER PLAN

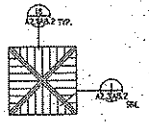

BUS SHELTER ROOF PLAN

FOR LOCATION SEE CIVIL PLANS

KEY: EQUIPMENT

- A2 DRY ERASE BOARD 72"W X 48"H SEE: 14-A2.1/A9.3
- A2a DRY ERASE BOARD 48"W X 36"H SEE: 14-A2.1/A9.3
- A2b DRY ERASE BOARD 96"W X 48"H SEE: 14-A2.1/A9.3
- A3 RECESSED PROJECTION SCREEN
- A5 BULLETIN BOARD, 48"W X 36"H, BACKBOARD SHALL BE CORK W/ NO.0-11 GRAY FABRICS FABRIC COVERING, FRAME SHALL BE BORNEED, COLOR SHALL BE FED. STD. 595B33 GRAY, SIMILAR TO NELSON-MARKING 217 AND 230 SERIES.
- A5a BULLETIN BOARD, SAME AS A5 EXCEPT 72"W X 48"H.
- A6 BULLETIN BOARD, SAME AS A5.
- A7 BUILDING DIRECTORY - SEE: 15-A2.1/A9.3
- FL1 LOCKERS 24"W X 36"D X 72"H - FT-3
- FL2 LOCKERS 12"W X 18"D X 36"H - FT-2
- FL3 LOCKERS 15"W X 15"D X 15"H - FT-2
- M1 RESILIENT MAT 36" X 60" - M-1

BLDG. 2007

TRUE NORTH

0 4' 8' 16'

1/8" = 1'-0"

REGISTERED ARCHITECT

DANIEL R. GRILLOT
STATE OF WASHINGTON

IF SHEET IS LESS THAN 28" X 40" IT IS A REDUCED PRINT REDUCE SCALE ACCORDINGLY.

TIBA ARCHITECTS-ENGINEERS SEATTLE, WASHINGTON

U.S. ARMY ENGINEER DISTRICT, SEATTLE CORPS OF ENGINEERS SEATTLE, WASHINGTON

FIRST FLOOR PLAN

KC-135 SQUADRON OPERATIONS / AMU FACILITY, PN GJKZ010005

FAIRCHILD AFB WASHINGTON

SIZE	SYSTEM NO.	FILE NO.	DATE	SCALE
F		2355/141-10-09	22 SEP 97	A2.1
DRN. AMC		DSN. WT	SHEET 16 OF 85	

A2.1

AS-BUILT

LAST EDIT: 04/29/99
FILENAME: V:\2637\ARCH\1-BLDG\FP-LAB.DWG

REVISIONS				
SYMBOL	ZONE	DESCRIPTION	DATE	BY
		REVISED AS-BUILT	11DEC03	J.P.M.

NOTE: PROVIDE CORNER GUARDS TO ALL CORNERS IN CORRIDORS 203,204,205 AND LOBBY 202.

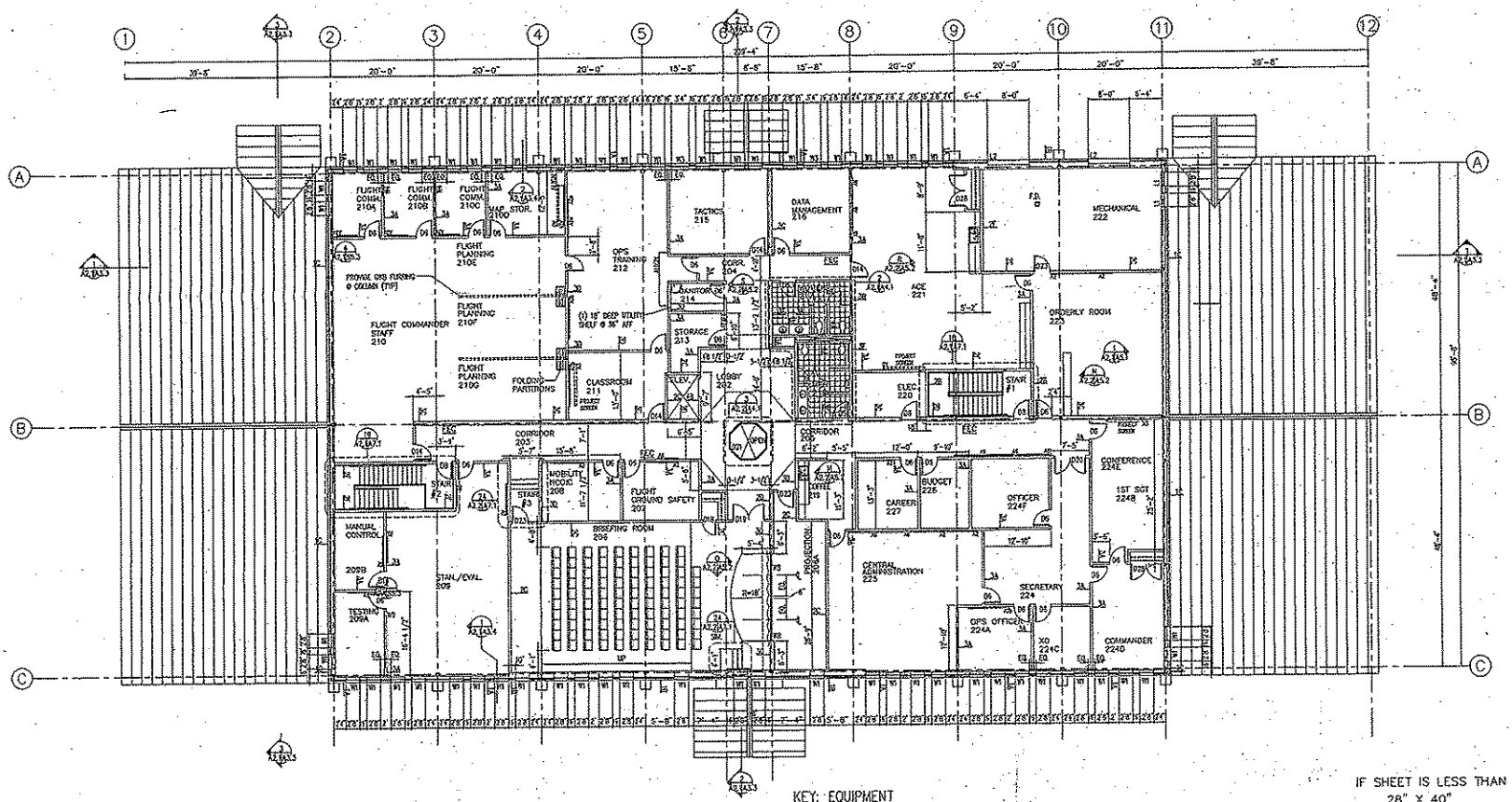

SECOND FLOOR PLAN

F.F. 114'-0"

BLDG. 2007

KEY: EQUIPMENT

A2 DRY ERASE BOARD 72"W X 48"H SEE: 14-A2.1/A9.3
A2a DRY ERASE BOARD 48"W X 35"H SEE: 14-A2.1/A9.3
A2b DRY ERASE BOARD 96"W X 48"H SEE: 14-A2.1/A9.3
A3 REDESIGN PROJECTION SCREEN
A5 BULLETIN BOARD, 48"W X 36"H, BACKBOARD SHALL BE CORK W/MED-LT GRAY PREMIUM FABRIC COVERING FRAME SHALL BE ROUNDED. COLOR SHALL BE FED. STD. #26132 GRAY, SIMILAR TO NELSON-HARKINS 217 AND 230 SERIES.
A5a BULLETIN BOARD, SAME AS A5 EXCEPT 72"W X 48"H.
A6 BULLETIN BOARD, SAME AS A5.
A7 BUILDING DIRECTORY
PL1 LOCKERS 24"W X 36"D X 72"H
PL2 LOCKERS 12"W X 18"D X 36"H
PL3 LOCKERS 15"W X 15"D X 15"H

TRUE NORTH

0 4' 8' 16' 1/8" = 1'-0"

A2.2

IF SHEET IS LESS THAN 28" X 40" IT IS A REDUCED PRINT REDUCE SCALE ACCORDINGLY

REGISTERED ARCHITECT

SECOND FLOOR PLAN
KC-135 SQUADRON OPERATIONS / AMU FACILITY, PN GJKZ010005
FAIRCHILD AFB WASHINGTON

SIZE	DRAWING NO.	FILE NO.	DATE	SHEET
F		230s/141-10-09	22 SEP 97	A2.2

DWN. AMC | CHK. NT | SHEET 17 OF 28

AS-BUILT

ASI EDIT: 04/10/97
FILENAME: V:\9637\ARCH\9637PLAN.DWG

AIR HANDLING UNIT — FAN AND FILTER SCHEDULE

EQUIP NO.	ARRGT/ DISCHARGE	MINIMUM OSA CFM (3)	FAN SECTION AIRFLOW CFM (4)	FAN SECTION EXT SP IN WG (1)	FAN SECTION WHEEL DIA IN	MAX BHP	MOTOR HP	FILTER TYPE	FILTER EFF. %	FILTER MAX FV FPM	PD IN WG CLEAN	PD IN WG FINAL (2)	REMARKS
AHU-1	AF/PLUG/SWSI	5,500	16,000	4.0	33	16	20	PLEATED THROWAWAY	30	300	0.2	0.60	VARIABLE SPEED DRIVE
AHU-2	AF/PLUG/SWSI	5,900	17,000	4.9	33	17.3	20	PLEATED THROWAWAY	30	350	0.2	0.60	VARIABLE SPEED DRIVE

NOTES:
(1) EXTERNAL TO FAN SECTION CABINET: NOT INCLUDING CABINET LOSSES.
(2) DESIGN CHANGE-OUT POINT.
(3) MINIMUM OSA CFM BASED ON MAXIMUM UNIT AIR FLOW
(4) AIRFLOWS, BHP AND PD BASED UPON FAIRCHILD AFB, WA. (ELEVATION 2462 FT)

AIR HANDLING UNIT — COIL SCHEDULE

EQUIP NO	AIRFLOW CFM (1)	CHILLED WATER COIL (2) EAT °F DB	EAT °F WB	LAT °F DB	LAT °F WB	MAX FV FPM	MAX AIR PD IN WG	H2O FLOW GPM	EWT °F	LWT °F	MAX H2O PD FT HD	HOT WATER COIL (3) EAT °F	LAT °F	MAX FV FPM	MAX AIR PD IN WG	FLOW GPM (3)	EWT °F	LWT °F	MAX H2O PD FT HD	REMARKS
AHU-1	16,000	84	66.2	58	57	500	0.8	110	45	54	16.2	40	60	350	0.10	35	180	150	1.5	
AHU-2	17,000	84	66.2	57.6	56.6	500	0.8	117	45	51.4	19.0	40	60	500	0.10	37	180	150	1.2	

NOTES:
(1) AIRFLOW AND PD BASED UPON FAIRCHILD AFB, WA. (ELEVATION 2462 FT) (2) 40% PROPYLENE GLYCOL BY WEIGHT. (3) 30% PROPYLENE GLYCOL BY WEIGHT.

AIR TERMINAL UNIT SCHEDULE

EQUIP NO	TYPE (1)	AIRFLOW RANGE CFM (2)	INLET SIZE (6) AT UNIT, IN	INLET SIZE (6) RUNOUT DUCT, IN	OUTLET SIZE IN (6)	MAX SP DROP IN WG (5)	HEATING COIL EAT	HEATING COIL EWT	HEATING COIL MAX H2O PD FT	FAN MOTOR HP	FAN EXT SP IN WG (7)	FAN MAX CFM	DISCH NC RATING (4)	REMARKS
5	V V OR CV	0 TO 400	6"ø	6"ø	10x10	0.10	60	180	2.0	–	–	–	30	
8	V V OR CV	401 TO 800	8"ø	10"ø	12x12	0.10	60	180	2.0	–	–	–	30	
10	V V OR CV	801 TO 1,200	10"ø	12"ø	16x14	0.10	60	180	2.0	–	–	–	30	
12	V V OR CV	1,201 TO 1,600	12"ø	14"ø	20x14	0.10	60	180	3.0	–	–	–	26	
6	FT	0 TO 400	5"ø	8"ø	10x10	0.20	60	180	2.0	1/10	0.30	(3)	20	
8	FT	401 TO 800	8"ø	10"ø	12x12	0.20	60	180	2.0	1/4	0.30	(3)	26	
10	FT	801 TO 1,199	10"ø	12"ø	16x14	0.15	60	180	2.0	1/4	0.30	(3)	29	
12	FT	1,200 TO 1,600	12"ø	14"ø	20x14	0.12	60	180	3.0	1/3	0.30	(3)	34	

NOTES:
1. FT = FAN POWERED UNIT (PARALLEL); V V = VARIABLE VOLUME UNIT; CV = CONSTANT VOLUME UNIT.
2. INDIVIDUAL TERMINAL UNIT MAX (COOLING CYCLE) AND MIN. (HEATING CYCLE) PRIMARY AIR FLOWS ARE INDICATED AT EACH UNIT ON FLOOR PLANS.
3. PARALLEL FAN TERMINAL: DURING THE HEATING CYCLE, FAN CFM SHALL BE A NOMINALLY 50% OF THE MAXIMUM PRIMARY AIR FLOW AS INDICATED ON THE FLOOR PLANS EXCEPT FOR UNITS SERVING ROOMS 111, 112 AND 125; THESE UNITS SHALL HAVE FANS SIZED FOR 100 PERCENT OF THE PRIMARY AIRFLOW.
4. DISCHARGE NC BASED ON MAX AIR FLOW, 3" DIFFERENTIAL STATIC PRESSURE, 5FT LINED DUCT, 6FT OF FLEXIBLE DUCT AND LINEAR DIFFUSER.
5. STATIC PRESSURE INCLUDES TERMINAL UNIT ONLY.
6. SUPPLY AIR DUCTWORK BASED UPON THESE NOMINAL INLET / OUTLET SIZES.
7. STATIC PRESSURE EXCLUDES TERMINAL UNIT.
8. FOR TERMINAL UNIT COIL PIPING CONNECTIONS, SEE DETAIL 5/M0.2 M7.5 ALSO REFER TO FAN POWERED TERMINAL DETAIL 1/M0.2 M7.5
9. HEATING WATER SYSTEM = PROPYLENE GLYCOL 30% BY VOLUME
10. HEATING WATER FLOW RATES FOR UNITS SERVING ROOMS 111, 112 AND 115 TO BE INCREASED BY 1 GPM OVER SCHEDULED FLOWS.

SOUND ATTENUATOR SCHEDULE

EQUIP. NO.	SERVICE	TYPE	LENGTH IN.	MAX FV FPM	DUCT SIZE, IN.	MAX PD IN WC	MINIMUM REQUIRED ACOUSTIC RATING dB RE 10^-12 W, OCTAVE BAND CENTER FREQUENCY HZ 63	125	250	500	1000	2000	4000	8000	REMARKS
SA-1	AHU-1	RECTANGULAR	36	1100	30x72	0.25	5	7	16	19	17	12	10	10	
SA-2	AHU-2	RECTANGULAR	36	1150	30x72	0.25	5	7	16	19	17	12	10	10	
SA-3	RF-1, RF-2	RECTANGULAR	36	2000	FAN SIZE	0.1	2	9	16	18	19	14	10	10	

FAN SCHEDULE

EQUIP NO	SERVICE	TYPE	WHEEL DIA. (IN)	ARRGT/ DISCHARGE	AIRFLOW CFM (2)	EXT SP IN WG (2)	RPM	MAX BHP (2)	MOTOR HP	DRIVE	REMARKS
EF-1	FIRST FLOOR EXHAUST	IN-LINE	13	HORIZ/HORIZ	1,250	0.75	1,500	0.35	1/2	BELT	
EF-2	SECOND FLOOR EXHAUST	IN-LINE	13	HORIZ/HORIZ	1150	0.625	1,475	0.26	1/3	BELT	
EF-3	HAZ STOR. 112A	CENTRIFUGAL BLOWER	10	HORIZ/HORIZ	400	0.25	2,000	0.13	1/3	BELT	EXPLOSION PROOF (A)
EF-4	HAZ STOR 125C	CENTRIFUGAL BLOWER	8	HORIZ/HORIZ	200	0.25	1,200	0.04	1/3	DIRECT	EXPLOSION PROOF
EF-5	MECHANICAL 124	PROP	14	HORIZ/HORIZ	900	0.25	1,150	–	1/8	DIRECT	
RF-1	AHU-1	VANEAXIAL	35	HORIZ/HORIZ	14,000	1.5 (1)	1,170	4.5	7-1/2	DIRECT	VARIABLE SPEED DRIVE
RF-2	AHU-2	VANEAXIAL	35	HORIZ/HORIZ	16,250	1.5 (1)	1,170	5.3	7-1/2	DIRECT	VARIABLE SPEED DRIVE

NOTES:
(1) TOTAL PRESSURE
(2) AIRFLOW EXT SP/TP AND BHP BASED ON FAIRCHILD AFB, WA. (ELEVATION 2462 FT)

AIR COOLED CHILLER SCHEDULE

EQUIP NO	TOTAL CAPACITY TONS	EVAPORATOR H2O FLOW GPM (1)	EWT °F	LWT °F	PD FT H2O (1)	AMBIENT DB TEMP. °F	FANS NO	FANS TYPE	FANS MOTOR (S) HP, EA	MAX INPUT KW	EER	MINIMUM CAPACITY STEPS	REMARKS
CHLR-1	82	227	55	45	15	93	10	PROPELLER	1	100	10.4	5	

NOTES:
(1) PROPYLENE GLYCOL 40% BY VOLUME (2) CAPACITY BASED ON FAIRCHILD AFB, WA. (ELEVATION 2462 FT)

FIN TUBE UNIT SCHEDULE

EQUIP NO	SERVICE	CAPACITY BTUH	EWT	H2O FLOW GPM	TUBE SIZE, IN	NO OF ROWS	FIN TUBE SIZE IN-IN	FIN TUBE LENGTH FT-IN	CABINET LENGTH FT-IN	CABINET WIDTH IN	CABINET HEIGHT IN	REMARKS
FT-1	BREAK 118	4920	180	0.5	1	1	3.75x2.75	7-0	10-0	3.5	14	
FT-2	BRIEFING 226	16000	180	1.6	1	1	3.75x2.75	16-0	18-0	3.5	14	3-8" FIN TUBE ELEMENTS
FT-3	CONF 224E	5250	180	0.5	1	1	3.75x2.75	8-0	12-0	3.5	14	

NOTES:
(1) FOR FIN TUBE CONNECTION SEE DETAIL 10/M0.2 M2.5 (2) HEATING WATER SYSTEM 30% PROPYLENE GLYCOL BY VOLUME.

REVISIONS

SYMBOL	ZONE	DESCRIPTION	DATE	BY
A	5-4/5	EF-3 CAPACITY INCREASED	20MAY98	GDH
		REVISED AS-BUILT	11DEC98	JFA

EQUIPMENT SOUND POWER LEVEL AND ISOLATOR SCHEDULE

EQUIP. NO.	MAX SOUND POWER LEVEL dB RE 10^-12 W, OCTAVE BAND CENTER FREQUENCY HZ 63	125	250	500	1000	2000	4000	8000	VIBRATION ISOLATOR TYPE	MIN STATIC DEFLECTION, IN.
AHU-1 (OUTLET)	91	89	89	83	79	74	70	71	(1)	0.75
AHU-2 (OUTLET)	91	89	89	83	79	74	70	71	(1)	2.5
RF-1	85	88	92	92	89	84	79	78	(2)	2.5
RF-2	87	90	94	94	91	86	81	80	(2)	2.5
EF-1	84	76	72	71	65	63	58	52	(2)	0.75
EF-2	83	74	66	63	57	57	50	43	(2)	0.75
AC-1	–	–	–	–	–	–	–	–	(3)	0.75
HWP-1,2	–	–	–	–	–	–	–	–	(3)	0.75
CHP-1,2	–	–	–	–	–	–	–	–	(3)	0.75
FT/SFT	–	–	–	–	–	–	–	–	(4)	0.25
CHLR-1	104	95	97	95	94	93	89	87	–	–

NOTES:
(1) INTERNALLY ISOLATED WITH SEISMICALLY RESTRAINED SPRING ISOLATORS.
(2) SPRING HANGERS
(3) INERTIA BASE WITH SPRING ISOLATORS AND SEISMIC SNUBBERS.
(4) NEOPRENE HANGERS

STEAM CONVERTOR SCHEDULE

EQUIP NO	TYPE	TUBE SIDE (HOT WATER) FLOW GPM	EWT °F	LWT °F	MAX. PD FT HD	SHELL SIDE (STEAM) INPUT LB/HR	PRESSURE PSIG	REMARKS
HX-1	U-TUBE	133	160	180	2	1300	2	

(1) HOT WATER: 30% PROPYLENE GLYCOL BY VOLUME.

AIR COMPRESSOR AND AIR DRYER SCHEDULE

EQUIP. NO.	SERVICE	TYPE	NOMINAL CAPACITY SCFM	MIN DELIVERY PRESS PSIG	CMPSR MOTOR HP	TANK GAL	REMARKS
AC-1	OXYGEN BOTTLE MAINT.	RECIPROCATING	11	100	3	80	DUPLEX TANK MOUNTED
AD-1	AC-1	REFRIGERATED	11	–	1/3	–	CAPACITY AT 35-35F DEW POINT AND 100F ENTERING AIR

PUMP SCHEDULE

EQUIP NO	SERVICE	TYPE	FLOW GPM	TOTAL DYNAMIC HD FT H2O	RPM	MIN EFF %	MOTOR HP	REMARKS
HWP-1,2	HEATING WATER SYS	END SUCTION	133 (1)	55.0	1,750	67	5.0	
CHP-1,2	CHILLED WATER SYS	END SUCTION	227 (2)	65.0	1,750	76	7.5	
CR-1	CONDENSATE UNIT	CLOSE COUPLED	9	115.0	3,450	—	1-1/2	DUPLEX WITH 15 GALLON RECEIVER

NOTES:
(1) HEATING WATER SYSTEM – PROPYLENE GLYCOL 30% BY VOLUME (2) CHILLED WATER SYSTEM – PROPYLENE GLYCOL 40% BY VOLUME

CONVECTOR SCHEDULE

EQUIP. NO.	SERVICE	CAPACITY MBH	EWT	FLOW GPM(2)	SIZE LENGTH FT-IN	SIZE WIDTH IN	SIZE HEIGHT IN	REMARKS
C-1	VESTIBULE 102A	10	180	1.5	48	6	32	
C-2	VESTIBULE 103A	10	180	1.5	48	6	32	
C-3	VESTIBULE 126A	10	180	1.5	48	6	32	
C-4	VESTIBULE 101A	10	180	1.5	48	6	32	
C-5	OUT STOR 122	8.3	180	1.0	48	6	32	
C-6	VESTIBULE 126B	10	180	1.5	48	6	32	

NOTE: (1) FOR CONVECTOR PIPING CONNECTIONS SEE DETAIL 9/M0.2 M2.5 (2) HEATING WATER SYSTEM – 30% PROPYLENE GLYCOL BY VOLUME

EXPANSION TANK SCHEDULE

EQUIP NO	SERVICE	TYPE	CAP GAL	ACCEPTANCE GALLONS	CHARGE PSIG	MAX SIZE, IN. DIA	MAX SIZE, IN. LENGTH/ HEIGHT	REMARKS
ET-1	HEATING WATER SYSTEM	ASME, DIAPHRAGM	34	11	12	16	43	VERTICAL
ET-2	CHILLED WATER SYSTEM	ASME, DIAPHRAGM	4.7	2.4	20	12	19	HORIZONTAL

NOTE:
1. REFER TO PLUMBING PLATE P0.1 FOR ADDITIONAL SCHEDULES.

BLDG. 2007

IF SHEET IS LESS THAN 28" X 40" IT IS A REDUCED PRINT REDUCE SCALE ACCORDINGLY

WOOD/HARBINGER, INC. Consulting Engineers Bellevue, Washington

TCA ARCHITECTS-ENGINEERS SEATTLE, WASHINGTON

U.S. ARMY ENGINEER DISTRICT, SEATTLE CORPS OF ENGINEERS SEATTLE, WASHINGTON

MECHANICAL EQUIPMENT SCHEDULES

KC-135 SQUADRON OPERATIONS / AMU FACILITY, PN GJKZ010065

FAIRCHILD AFB WASHINGTON

DWG M0.2

2265/113-15-05 | 22 SEP 97 | SHEET 34 OF 68

AS-BUILT

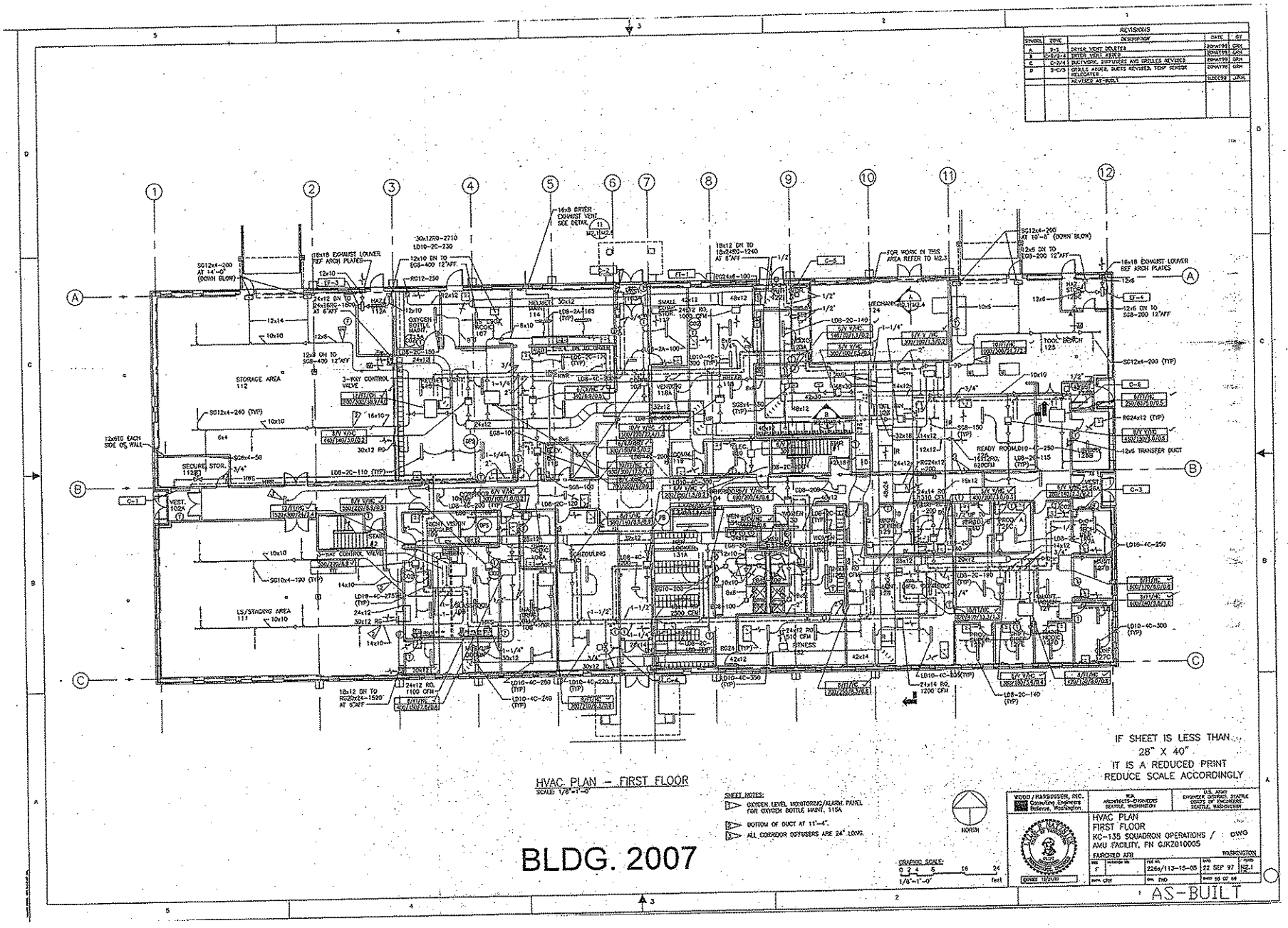

HVAC PLAN – FIRST FLOOR
SCALE: 1/8"=1'-0"

SHEET NOTES:
1. OXYGEN LEVEL MONITORING/ALARM PANEL FOR OXYGEN BOTTLE MANIF. 115A
2. BOTTOM OF DUCT AT 11'-4".
3. ALL CORRIDOR DIFFUSERS ARE 24" LONG.

BLDG. 2007

REVISIONS				
SYMBOL	ZONE	DESCRIPTION	DATE	BY
		REVISED AS-BUILT	11SEP99	JPH

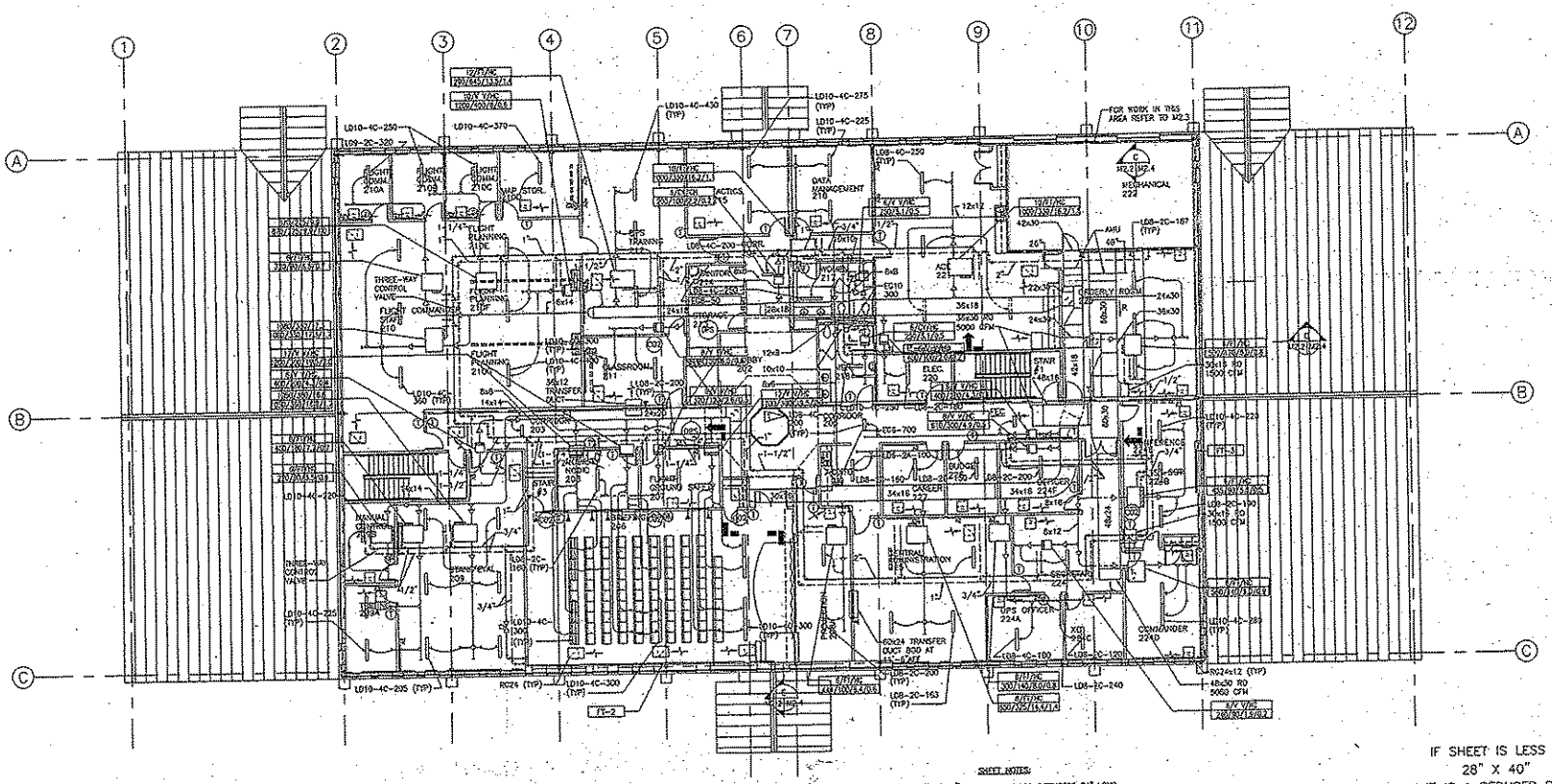

HVAC PLAN – SECOND FLOOR
SCALE 1/8"=1'-0"

IF SHEET IS LESS THAN
28" X 40"
IT IS A REDUCED PRINT
REDUCE SCALE ACCORDINGLY

NORTH

BLDG. 2007

GRAPHIC SCALE:
0 2 4 8 16 24
1/8"=1'-0" feet

WOOD/HARBINGER, INC.
Consulting Engineers
Bellevue, Washington

N.A.
ARCHITECTS-ENGINEERS
SEATTLE, WASHINGTON

U.S. ARMY
ENGINEER DISTRICT, SEATTLE
CORPS OF ENGINEERS
SEATTLE, WASHINGTON

HVAC PLAN
SECOND FLOOR
KC-135 SQUADRON OPERATIONS / AMU FACILITY, PN GJK2010005
FAIRCHILD AFB
WASHINGTON

DWG

REV	REVISION NO.	PLANS	DATE	PLATE
F		2286/113-15-05	22 SEP 97	M2.2
DWN. GDH		CHK. LFN	SHEET 57 OF 69	

AS-BUILT

TRUNK LAYOUT – BLDG.2007

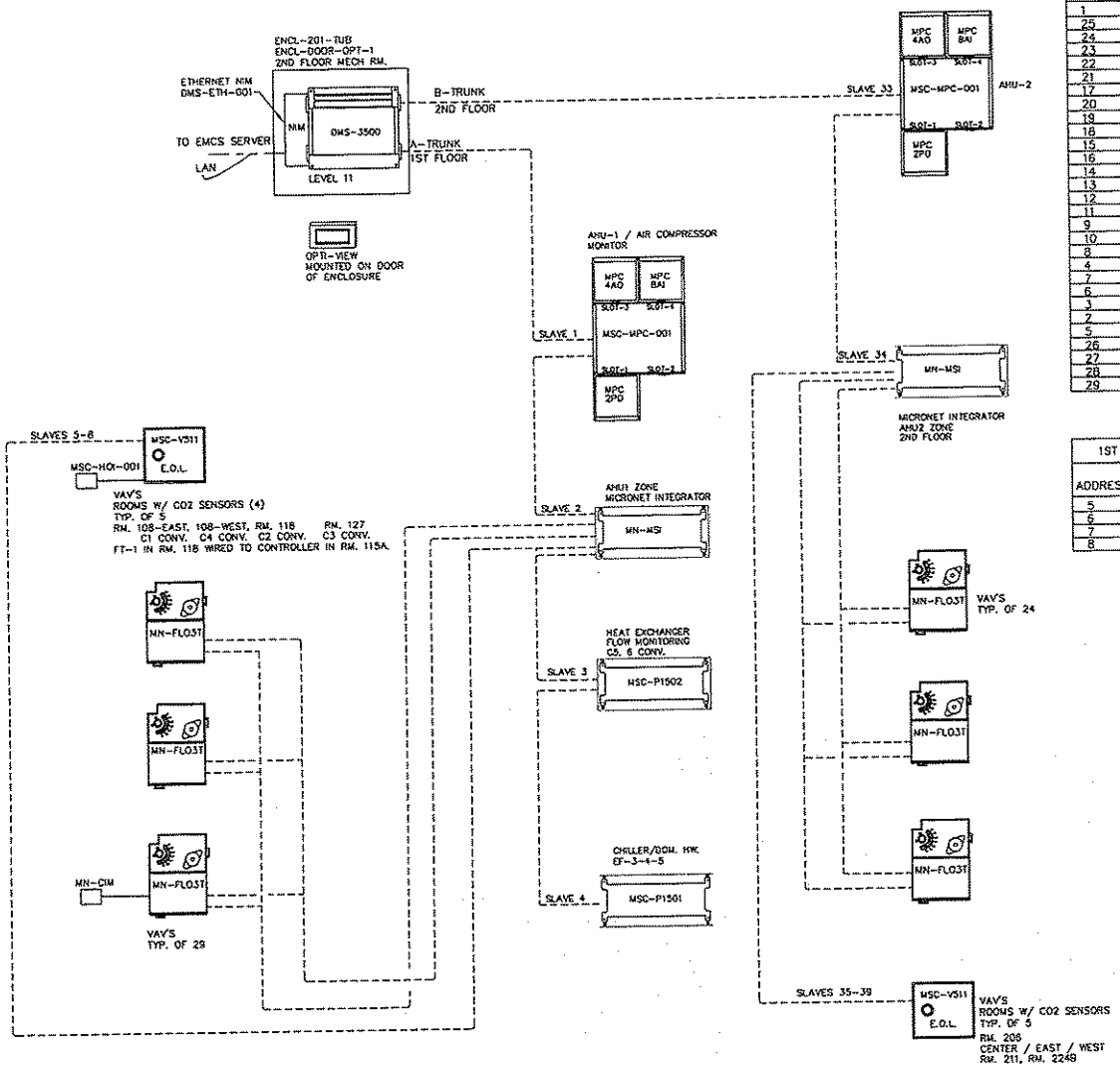

1ST FLOOR VAV SCHEDULE MICRONET CONTROLLERS				
ADDRESS	ROOM	UNIT TAG #	BOX SIZE	CFM MIN/MAX
1	125	FPVAV13	10	1000/300
25	123E	VAV-18	6	140/70
24	123W	VAV-20	6	300/100
23	123C	VAV-19	6	140/70
22	120	CV-17	6	300
21	103	VAV-15	6	300/150
17	102	VAV-14	8	700/350
20	115	CV-13	6	340
19	113	VAV-12	8	440/140
18	112	FPVAV11	12	1800/300
15	107	FPVAV9	8	400/150
16	106A	VAV-11	6	300/100
14	106	FPVAV8	8	700/210
13	105	FPVAV7	8	580/140
12	101	VAV-8	6	200/150
11	131A	CV-7	8	540
9	130A	CV-6	6	350
10	104	VAV-5	6	400/200
8	132	FPVAV6	8	700/255
4	129	VAV-2	8	400/200
7	127E	FPVAV4	8	420/130
6	127B	FPVAV2	8	500/170
3	125B	FPVAV1	6	250/80
2	126	VAV-1	8	460/150
5	126C	VAV-3	6	280/140
26	115A	FPVAV12	10	930/300
27	111	FPVAV10	12	1520/300
28	127C	FPVAV3	8	600/240
29	128	FPVAV5	10	820/410

2ND FLOOR VAV SCHEDULE MICRONET CONTROLLERS				
ADDRESS	ROOM	UNIT TAG #	BOX SIZE	CFM MIN/MAX
27	223	FPVAV14	8	500/170
24	224D	FPVAV16	8	560/140
20	225	FPVAV17	8	650/325
22	224	VAV-23	5	240/190
19	224A	FPVAV18	8	300/140
18	206A	FPVAV19	6	444/100
16	209	FPVAV20	10	1050/360
15	209A	FPVAV21	8	450/180
14	209B	FPVAV22	6	220/80
13	203	VAV-28	6	400/200
17	208	VAV-25	6	320/120
23	224E	VAV-22	8	610/300
21	205	VAV-21	8	400/200
1	221	FPVAV28	12	1000/380
2	220	VAV-34	6	180/45
4	218	CV-33	6	250
3	217	CV-32	6	250
5	215	FPVAV27	10	1000/330
6	204	VAV-31	6	200/100
8	212	FPVAV26	12	1280/645
9	210E	VAV-29	10	1200/400
10	210C	FPVAV24	10	870/225
12	210	FPVAV23	10	1080/330
11	210A	FPVAV25	6	320/90

1ST FLOOR VAV SCHEDULE MSC-V511 CONTROLLERS				
ADDRESS	ROOM	UNIT TAG #	BOX SIZE	CFM MIN/MAX
5	118	VAV-16	10	1100/220
6	108E	VAV-9	8	520/220
7	108W	VAV-10	8	520/220
8	127	VAV-4	6	350/160

2ND FLOOR VAV SCHEDULE MSC-V511 CONTROLLERS				
ADDRESS	ROOM	UNIT TAG #	BOX SIZE	CFM MIN/MAX
35	206E	VAV-27	12	1200/300
36	206C	VAV-26	12	1200/300
37	206W	VAV-24	12	1200/300
38	211	VAV-30	8	600/150
39	224B	FBVAV-15	6	630/115

FBVAV-15 – THE AS-BUILTS SHOW AS FAN-POWERED BUT THE PROGRAM INDICATES NO FAN – PROBABLY NO FAN. M2 5/30/05

CV = CONSTANT VOLUME
VAV = VARIABLE VOLUME
FP = FAN POWERED

BLDG. 2007

MISC. REVISIONS: 8-31-98

SIEBE ENVIRONMENTAL CONTROLS

SIEBE ENVIRONMENTAL CONTROLS
3815 E. MAIN
SPOKANE, WA. 99202

DESCRIPTION: TRUNK LAYOUT

JOB NAME: SQUAD OPS/AMU
LOCATION: F.A.F.B. SPOKANE, WA.
ARCHITECT: WJA PS
ENGINEER: WOOD / HARBINGER INC.
CONTRACTOR: SMK MECHANICAL
ENGR'D BY: R.RHODES
CHECKED BY:
PROJECT NO.:
DRAWN BY: D.S.

DRAWING NO. 98004-1
DATE 2-19-97 SHEET 1 OF 7

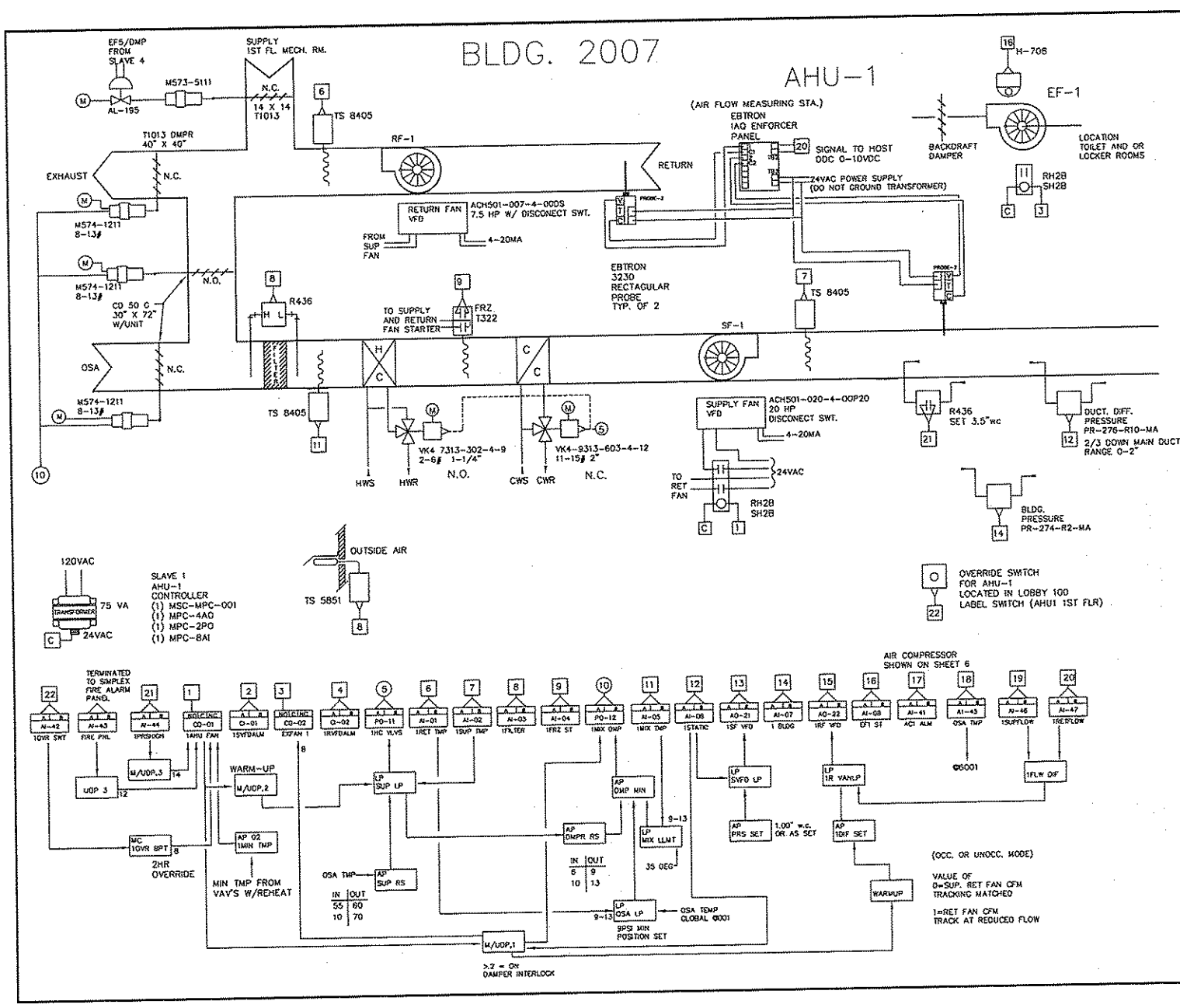

Sequence of operation AHU-1 / RF-1:

The Siebe automation control system will utilize optimal start, occupied and unoccupied modes of control.

Optimal start/warm-up mode: The Siebe automation system will calculate the outside air temp. and the space temperature to start the fan systems to bring the space temperatures up to occupied setpoint at the latest possible time.

During optimal start/warm-up the dampers will be positioned to full recirculation, variable frequency controlling to duct static pressure, the cooling valve in full bypass with the associated exhaust fans off and primary dampers of vav dampers open 100% supply air shall be set at 80 deg.

Occupied mode: The supply and return fans will operate continuously. Exhaust fan 1 shall be on. The dampers positioned to minimum outside air as set thru by balancing contractor. The heating valve, osa/return/relief dampers and cooling valve will modulate in sequence to maintain 60 degree supply air temperature. A call for heating will modulate the heating valve open with the dampers positioned to minimum. A call for cooling will modulate the dampers from minimum to 100% outside air, a further call for cooling will modulate the cooling valve open. The dampers will be positioned to minimum
when the outside air temperature is greater than the return air temperature. Supply air temperature shall be reset off OSA temperature.

OSA TEMP	SUPPLY TEMP
10 DEG OR LESS	70 DEG
55 DEG AND ABOVE	60 DEG

Ventilation mode: The Siebe controller will position dampers to maintain 5500 cfm minimum outside air during the ventilation mode.

Supply air static pressure control: A duct static pressure sensor located 2/3 down the longest supply duct run will signal the Siebe controller. The supply fan variable frequency drive will be utilized to maintain 1.25" w.c.

Return fan control: The Siebe controller will utilize the variable frequency drive to maintain differential cfm between the supply and return.

Unoccupied Mode:

Temporary Override: A momentary push button switch will activate if required, the HVAC system to enter warm-up cycle, then when building has warmed up, shall switch to day cycle for duration of 2 hours or as set.

A freeze protection thermostat located on the discharge side of the heating coil will stop the supply and return fans if 40 degree discharge air is sensed. A alarm will be generated to the Siebe automation system.

A duct smoke detector thru the fire alarm system will shutdown the air handler upon detection of smoke.

Exhaust fan 1: Exhaust fan will be on during occupied mode of AHU-1 and off during unoccupied mode of AHU-1.

MISC. REVISIONS: 12-17-98

SIEBE ENVIRONMENTAL CONTROLS
SIEBE ENVIRONMENTAL CONTROLS
3915 E. MAIN
SPOKANE, WA. 99202

DESCRIPTION: AHU-1

JOB NAME	SQUAD OPS/AMU
LOCATION	F.A.F.B. SPOKANE, WA.
ARCHITECT	WLA PS
ENGINEER	WOOD / HARBINGER INC.
CONTRACTOR	SMK MECHANICAL
ENGR'D BY	R.RHODES
CHECKED BY	
PROJECT NO.	
DRAWN BY	D.S.
DRAWING NO.	98004-2
DATE	2-19-98 SHEET 2 OF 7

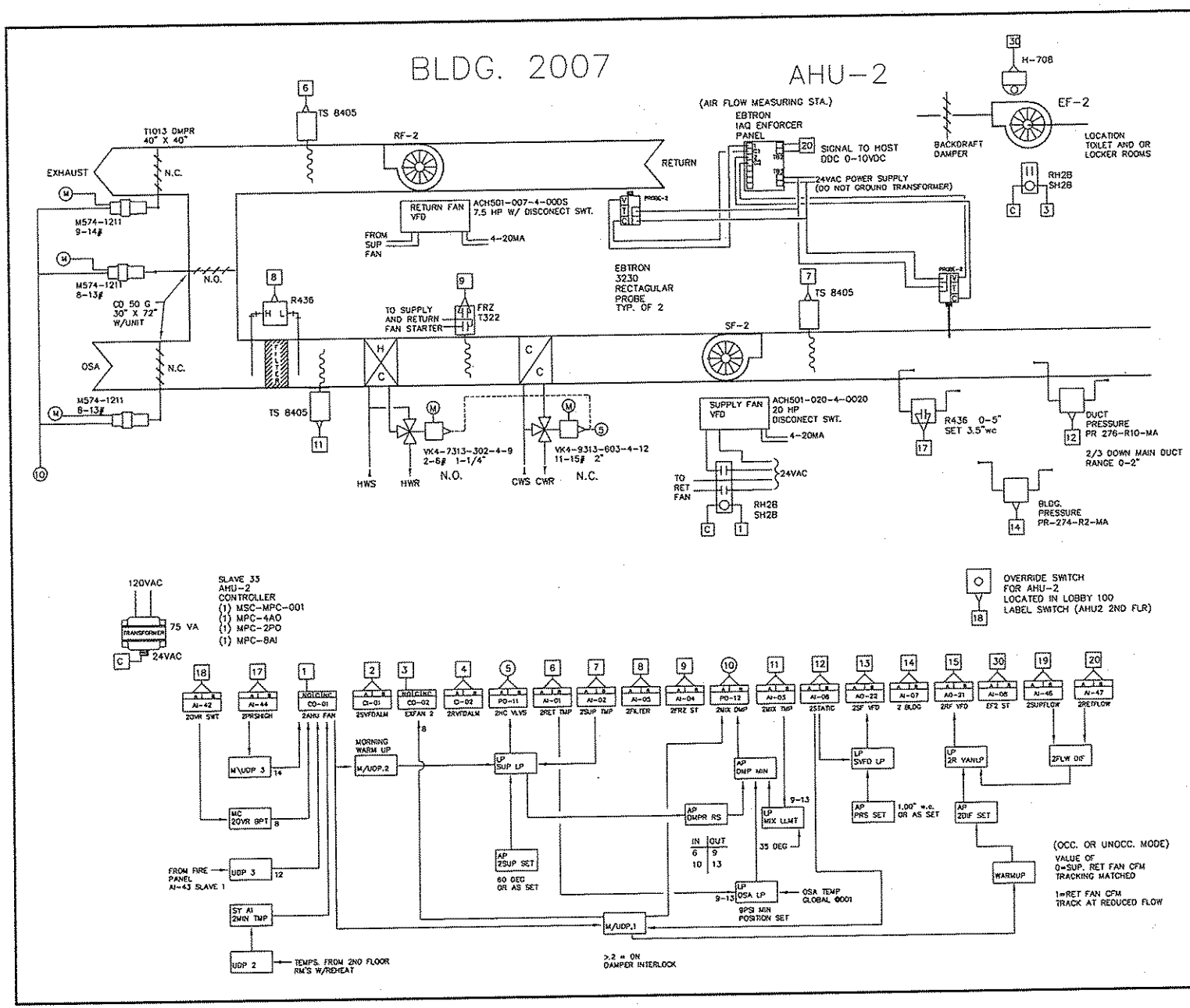

Sequence of operation AHU-2 / RF-2:

The Siebe automation control system will utilize optimal start, occupied and unoccupied modes of control.

Optimal start/warm-up mode: The Siebe automation system will calculate the outside air temp. and the space temperature to start the fan systems to bring the space temperatures up to occupied setpoint at the latest possible time.

During optimal start/warm-up the dampers will be positioned to full recirculation, variable frequency controlling to duct static pressure, the cooling valve in full bypass with the associated exhaust fans off and primary dampers of vav dampers open 100%
Supply air shall be set at 80 deg.

Occupied mode: The supply and return fans will operate continuously with the dampers positioned to minimum outside air as set thru by balancing contractor. The heating valve, oso/return/relief dampers and cooling valve will modulate in sequence to maintain 60 degree supply air temperature. A call for heating will modulate the heating valve open with the dampers positioned to minimum. A call for cooling will modulate the dampers from minimum to 100% outside air, a further call for cooling will modulate the cooling valve open. The dampers will be positioned to minimum when the outside air temperature is greater than the return air temperature. Supply air temperature shall be reset off OSA temperature.

OSA TEMP	SUPPLY TEMP
10 DEG OR LESS	70 DEG
55 DEG AND ABOVE	60 DEG

Ventilation mode: The Siebe controller will position dampers to maintain 5500 cfm minimum outside air during the ventilation mode.

Supply air static pressure control: A duct static pressure sensor located 2/3 down the longest supply duct run will signal the Siebe controller. The supply fan variable frequency drive will be utilized to maintain 1.00" w.c. or as set.

Return fan control: The Siebe controller will utilize the variable frequency drive to maintain differential cfm between the supply and return.

Unoccupied Mode:

Temporary Override: A momentary push button switch will activate if required, the HVAC system to enter warm-up cycle, then when building has warmed up, shall switch to day cycle for duration of 2 hours or as set.

A freeze protection thermostat located on the discharge side of the heating coil will stop the supply and return fans if 40 degree discharge air is sensed. A alarm will be generated to the Siebe automation system.

A duct smoke detector thru the fire alarm system will shutdown the air handler upon detection of smoke.

Exhaust fan 2: Exhaust fan will be on during occupied mode of AHU-2 and off during unocuupied mode of AHU-2.

MISC. REVISIONS: 12-17-98

SIEBE ENVIRONMENTAL CONTROLS

SIEBE ENVIRONMENTAL CONTROLS
3915 E. MAIN
SPOKANE, WA. 99202

DESCRIPTION: AHU-2

JOB NAME	SQUAD OPS/AMU
LOCATION	F.A.F.B. SPOKANE, WA.
ARCHITECT	WJA PS
ENGINEER	WOOD / HARBINGER INC.
CONTRACTOR	SMK MECHANICAL
ENGR'D BY	R.RHODES
CHECKED BY	
PROJECT NO.	
DRAWN BY	D.S.

DRAWING NO. 98004-3
DATE 2-19-98 SHEET 3 OF 7

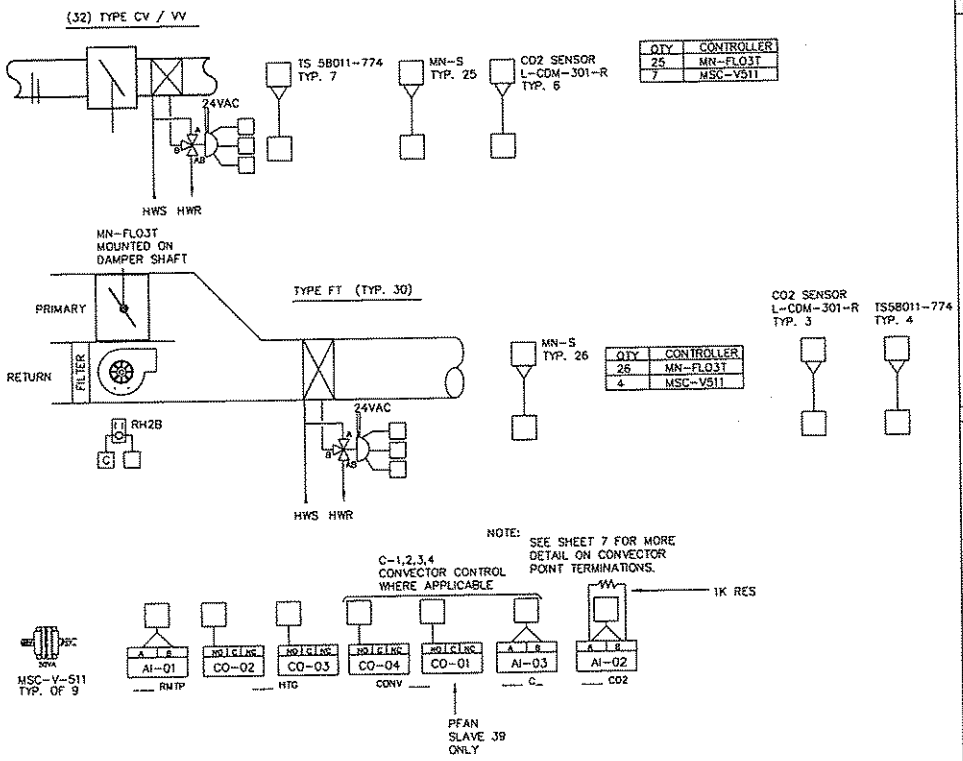

VAV VALVE AND CONTROLLER SCHEDULE

ROOM#	BOX	TYPE	VALVE	CONTROLLER	CO2 req'd	VALVE
113	8"	VV	VF 7213-252-4-1	MN-FLO	NO	
112	12"	FT	VF 7313-252-4-4	MN-FL03T	NO	3-WAY
115	6"	CV	VF 7213-252-4-1	MN-FL03T	NO	
115A	12"	FT	VF 7213-252-4-2	MN-FL03T	NO	
103	6"	VV	VF 7213-252-4-1	MN-FL03T	NO	
118	10"	VV	VF 7213-252-4-2	MSC-V511	YES	(FT-1)
123A	6"	VV	VF 7213-252-4-1	MN-FL03T	NO	
123	6"	VV	VF 7213-252-4-1	MN-FL03T	NO	
123	6"	VV	VF 7213-252-4-1	MN-FL03T	NO	
125	10"	FT	VF 7213-252-4-2	MN-FL03T	NO	
125B	6"	FT	VF 7213-252-4-1	MN-FL03T	NO	
126	8"	VV	VF 7213-252-4-1	MN-FL03T	NO	
129	6"	VV	VF 7213-252-4-1	MN-FL03T	NO	
126C	6"	VV	VF 7213-252-4-1	MN-FL03T	NO	
127	6"	VV	VF 7213-252-4-1	MSC-V511	YES	
127B	8"	FT	VF 7213-252-4-2	MN-FL03T	NO	
127C	8"	FT	VF 7213-252-4-2	MN-FL03T	NO	
127E	8"	FT	VF 7213-252-4-2	MN-FL03T	NO	
128	10"	FT	VF 7213-252-4-2	MN-FL03T	NO	
132	8"	FT	VF 7213-252-4-2	MN-FL03T	NO	
130A	6"	CV	VF 7213-252-4-2	MN-FL03T	NO	
131A	8"	CV	VF 7213-252-4-2	MN-FL03T	NO	
101	6"	VV	VF 7213-252-4-1	MN-FL03T	NO	
105	8"	FT	VF 7213-252-4-2	MN-FL03T	NO	
106	8"	FT	VF 7213-252-4-2	MN-FL03T	NO	
107	8"	FT	VF 7213-252-4-2	MN-FL03T	NO	
108EAST	8"	VV	VF 7213-252-4-2	MSC-V511	YES	
108WEST	8"	VV	VF 7213-252-4-2	MSC-V511	YES	
111	12"	FT	VF 7313-252-4-2	MSC-V511	NO	3-WAY
106A	6"	VV	VF 7213-252-4-1	MN-FL03T	NO	
102	8"	VV	VF 7213-252-4-1	MN-FL03T	NO	
120	6"	CV	NO	MN-FL03T	NO	
104	6"	VV	VF 7213-252-4-1	MN-FL03T	NO	
ROOM#	BOX	TYPE	VALVE	CONTROLLER	CO2 req'd	VALVE
210A	6"	FT	VF 7313-252-4-2	MN-FL03T	NO	3-WAY
210C	10"	FT	VF 7213-252-4-2	MN-FL03T	NO	
210E	10"	VV	VF 7213-252-4-1	MN-FL03T	NO	
210	10"	FT	VF 7213-252-4-2	MN-FL03T	NO	
212	12"	FT	VF 7213-252-4-2	MN-FL03T	NO	
217	6"	CV	VF 7213-252-4-1	MN-FL03T	NO	
215	10"	FT	VF 7213-252-4-2	MN-FL03T	NO	
204	6"	CV	VF 7213-252-4-1	MN-FL03T	NO	
221	10"	FT	VF 7213-252-4-2	MN-FL03T	NO	
220	6"	VV	VF 7313-252-4-1	MN-FL03T	NO	
218	6"	CV	VF 7213-252-4-1	MN-FL03T	NO	
211	8"	VV	VF 7213-252-4-1	MSC-V511	YES	
203	6"	VV	VF 7213-252-4-1	MN-FL03T	NO	
208	6"	VV	VF 7213-252-4-2	MN-FL03T	NO	
224F	8"	VV	VF 7213-252-4-1	MN-FL03T	NO	
205	6"	VV	VF 7213-252-4-1	MN-FL03T	NO	
223	8"	FT	VF 7213-252-4-2	MN-FL03T	NO	
224B	8"	VV	VF 7213-252-4-1	MSC-V511	YES	(FT-3)
224D	8"	FT	VF 7213-252-4-2	MN-FL03T	NO	
224	8"	VV	VF 7213-252-4-1	MN-FL03T	NO	
224A	8"	FT	VF 7213-252-4-2	MN-FL03T	NO	
225	8"	FT	VF 7213-252-4-2	MN-FL03T	NO	
205A	6"	FT	VF 7213-252-4-1	MN-FL03T	NO	
206	12"	FT	VF 7213-252-4-2	MSC-V511	YES	
206	12"	FT	VF 7213-252-4-2	MSC-V511	YES	(FT-2)
205	12"	FT	VF 7213-252-4-2	MSC-V511	YES	
209	10"	FT	VF 7213-252-4-2	MN-FL03T	NO	
209A	8"	FT	VF 7213-252-4-2	MN-FL03T	NO	
209B	6"	FT	VF 7313-252-4-2	MN-FL03T	NO	3-WAY

Sequence of operation space temperature control:

VAV boxes: During the occupied mode the damper will modulate to maximum cfm on a call for cooling. On a drop in space temperature the damper will modulate to minimum cfm, a further drop in space temperature the heating control valve will open. Heating setpoint 68 degree, cooling setpoint 74 degrees.

Fan powered (series) boxes: During the warm-up / optimal start and occupied modes the fan will run continuously. The damper will modulate from minimum cfm to maximum cfm on a call for cooling to maintain cooling setpoint. On a drop in space temperature the damper will modulate to minimum cfm, a further drop in space temperature the heating control valve will open. Heating setpoint 68 degrees, cooling setpoint 75 degrees. During the unoccupied mode the fan will start and the heating control valve will open when space temperature falls to 55 degrees. Unit will continue to operate in full heating until temperature rises to 60 degrees.

Fan powered (parallel) boxes: During the occupied mode the damper will modulate from minimum cfm to maximum cfm on a call for cooling to maintain cooling setpoint. On a drop in space temperature the damper will modulate to minimum cfm, a further drop in space temperature the fan will start and the heating control valve will open. Heating setpoint 68 degrees, cooling setpoint 75 degrees. During the unoccupied mode the fan will start and the heating control valve will open when space temperature falls to 55 degrees. Unit will continue to operate in full heating until temperature rises to 60 degrees.

Terminal unit ventilation control (see control drawing for schedule): During the occupied mode the Siebe automation will monitor the co2 levels as indicated. Upon a rise in co2 level the damper will modulate open to maximum cfm per the following schedule:

Space co2 level (ppm)	Terminal unit damper
Below 700	Under space temp. control
1000	Maximum cfm

The damper will modulate linearally between the indicated co2 levels. The terminal unit will control to maintain 68 degree heating setpoint during co2 override.

WIRING DETAIL OF FIN-TUBE VALVE TIED INTO RM. VAV BOX CONTROL APPLICABLE ON
SLAVE 39 RM-224B FT3 /DO-01 FOR PARR. FAN
SLAVE 5 RM-118 FT1 /DO-1-4 FOR C2

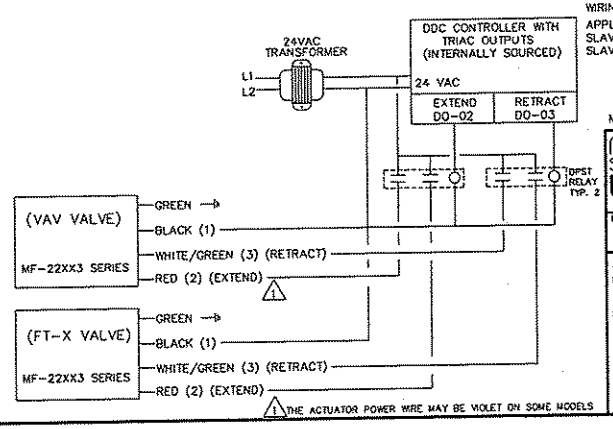

BLDG. 2007

MISC. REVISIONS: 8-31-98

SIEBE ENVIRONMENTAL CONTROLS

SIEBE ENVIRONMENTAL CONTROLS
3915 E. MAIN
SPOKANE, WA. 99202

DESCRIPTION
VAV BOXES

JOB NAME	SQUAD OPS/AMU
LOCATION	F.A.F.B. SPOKANE, WA.
ARCHITECT	WJA PS
ENGINEER	WOOD / HARBINGER INC.
CONTRACTOR	SMK MECHANICAL
ENGR'D BY	R.RHODES
CHECKED BY	
PROJECT NO.	985-98004-34
DRAWN BY	D.S.

DRAWING NO. 98004-4
DATE 2-19-98 SHEET 4 OF 7

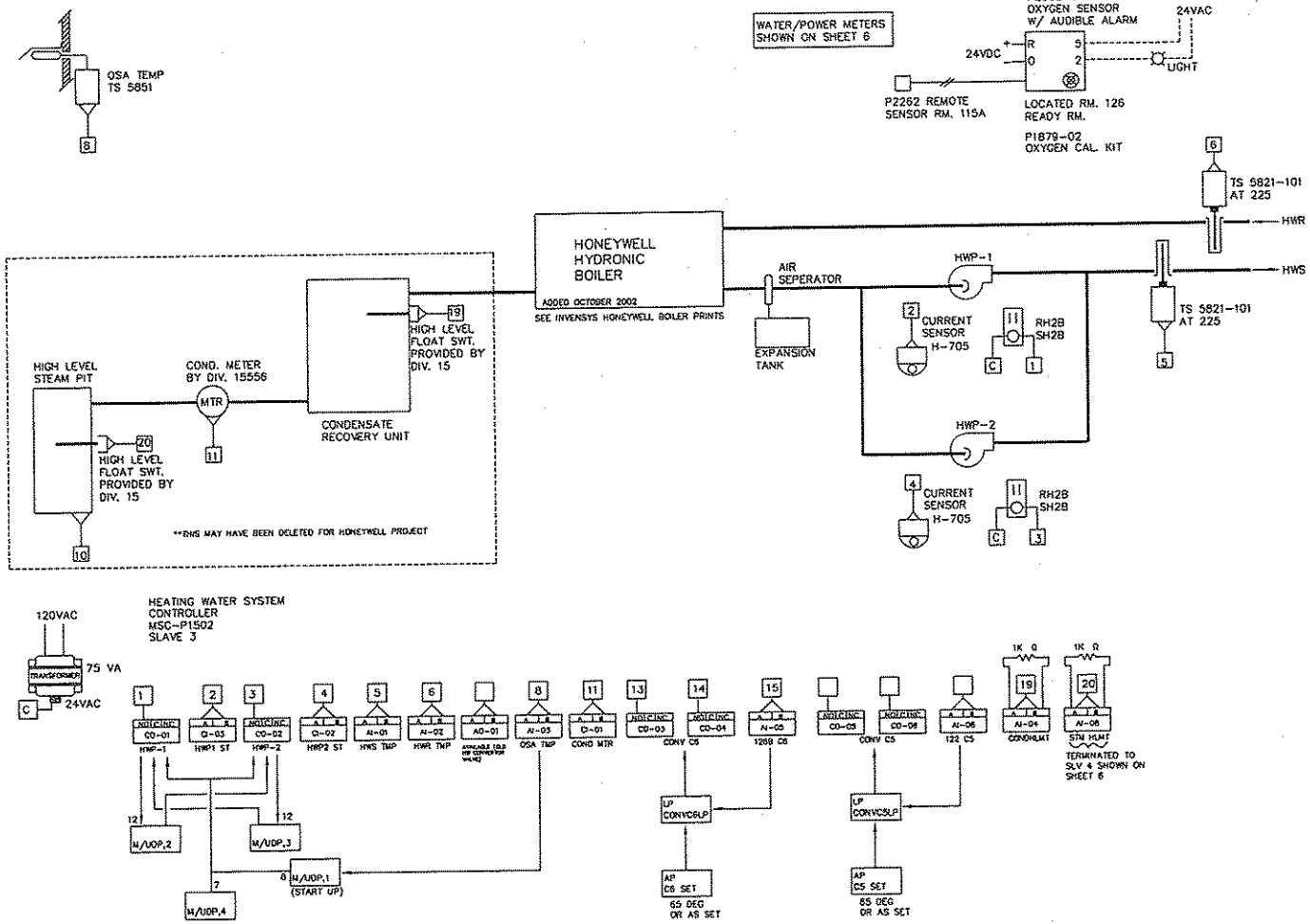

Sequence of operation Heating Water System:

Steam to HW convertor has been removed. A Honeywell maintaine hydronic boiler now provides the heating medium. See Invensys Honeywell prints for more info.

Hot water pumps shall have a minimum on time of 30 minutes. When hot water pumps status is off the steam valve shall be closed.

The Siebe automation system will energize the lead heating water pump below 65 degrees osa temperature. Upon failure of the lead heating pump the lag heating water pump will be energized after a delay (60 seconds) as programmed thru the Siebe system.

The lead heating water pump will be alternated weekly based on run-time.
Sequence of operation Convectors: Siebe will control the heating valve to maintain 65 degree occupied space temperature and 55 degree unoccupied space temperature.

Siebe will monitor the electrical demand meter.
Siebe will monitor the water meter.
Siebe will monitor the condensate meter

Siebe will monitor the oxygen level in Room 115A (oxygen bottle maintenance room). Upon high oxygen level, an audible and visual alarm (with silence switch) will activate in the ready room 126. An auxiliary visual alarm will be activated near the entrance to the oxygen bottle maintenance room.

BLDG. 2007

5/15/03 – REMOVED HW CONVERTOR – ADDED BOILER – M2

SIEBE ENVIRONMENTAL CONTROLS

SIEBE ENVIRONMENTAL CONTROLS
3915 E. MAIN
SPOKANE, WA. 99202

DESCRIPTION
BOILERHEATING WATER SYSTEM – BLDG 2007

JOB NAME	SQUAD OPS/AMU
LOCATION	F.A.F.B. SPOKANE, WA.
ARCHITECT	WJA PS
ENGINEER	WOOD / HARBINGER INC.
CONTRACTOR	SMK MECHANICAL
ENGR'D BY	R.RHODES
CHECKED BY	
PROJECT NO.	965-98004-34
DRAWN BY	D.S.
DRAWING NO.	98004-5
DATE	2.19.98
SHEET	5 OF 6

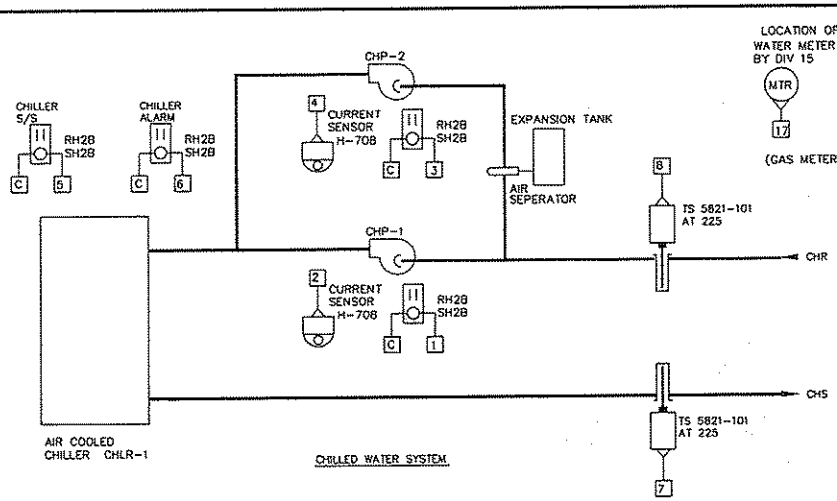

CHILLED WATER SYSTEM

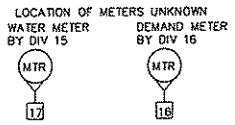

(GAS METER SHOWN ON SHEET 5)

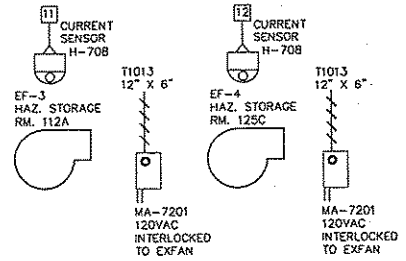

Sequence operation Chilled Water System:

The Siebe automation system will start the chilled water system when the outside air temperture is above 62 degrees and there is a demand for cooling from either of the air handling units, and bldg. is in occupied mode.
The automation system will stop the chilled water system when the outside air temperature is below 60 degrees or there is no cooling demand from either of the air handling units.Chilled water pump shall have a minimum on time of 30 minutes.

The Siebe controller will start the lead chilled water pump and upon proof of start up the chiller will be enabled. On proof of flow the chiller will operate upon its self contained controls to maintain chilled water setpoint. Upon lead pump failure the chiller will be disabled, the lag pump will be started and upon proof of start the chiller will be enabled.

The Siebe controller will disable the chiller and the chilled water pump will continue to operate for three (3) minutes (or as set).

The lead chilled water pump will be alternated weekly based on run-time.

Sequence of operation Mechanical room ventilation: A rise in space temperature to 85 degrees will start EF-5 and open the return air damper at AHU-1. Fan will continue to operate with damper open until temperature falls to 80 degrees.

Siebe will monitor the status of EF-3 and EF-4.

Siebe will monitor low air pressure for air compressor AC-1.

Siebe will provide scheduled start / stop for the Domestic hot water heater and circ. pump.
Siebe will monitor the domestic hot water re-circulation temperature.

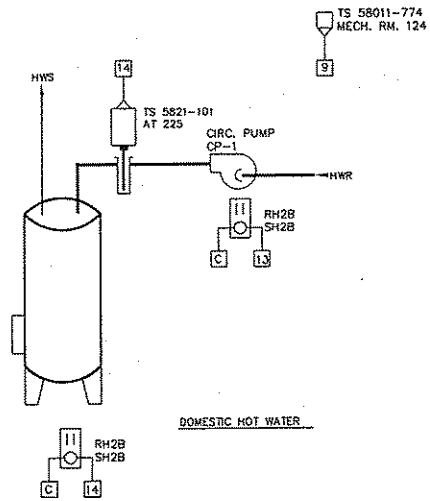

DOMESTIC HOT WATER

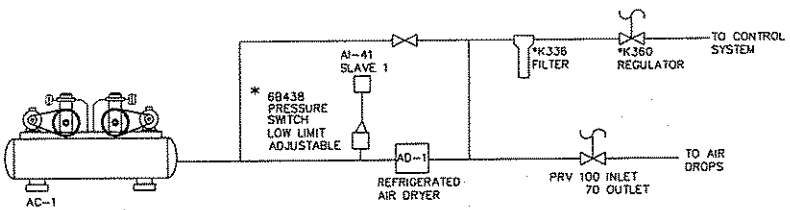

* SIEBE PROVIDES THESE DEVICES ON COMPRESSED AIR SOURCE

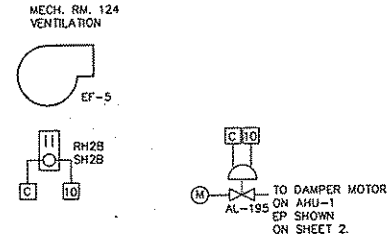

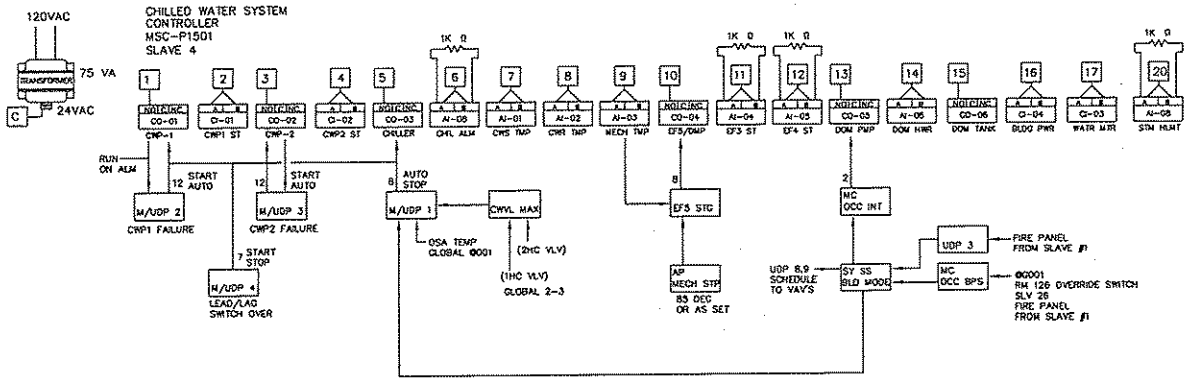

MISC. REVISIONS: 8-31-98

SIEBE ENVIRONMENTAL CONTROLS

SIEBE ENVIROMENTAL CONTROLS
3915 E. MAIN
SPOKANE, WA. 99202

DESCRIPTION
CHILLED WATER SYSTEM

JOB NAME	SQUAD OPS/AMU
LOCATION	F.A.F.B. SPOKANE, WA.
ARCHITECT	WJA PS
ENGINEER	WOOD/HARBINGER INC.
CONTRACTOR	SMK MECHANICAL
ENGR'D BY	R.RHODES
CHECKED BY	
PROJECT NO.	965-98004-34
DRAWN BY	D.S.

DRAWING NO. 98004-6
DATE 2-19-98 SHEET 6 OF 7

CONVECTOR	LOCATION	TERMINATION CONTROLLER	SLAVE #	REMARKS
C-1	WEST ENTRY	MSC-V-511	6	SLV W/ 108 EAST VAV
C-2	NORTH ENTRY	MSC-V-511	5	SLV W/ 118 VAV
C-3	EAST ENTRY	MSC-V-511	8	SLV W/ 127 VAV
C-4	SOUTH ENTRY	MSC-V-511	7	SLV W/ 108 WEST VAV
C-5	N.SIDE OUTER STORAGE	MSC-P1501	3	SLV W/ BOILER RM. CONTROLS
C-6	VESTIBULE	MSC-P1501	3	SLV W/ BOILER RM. CONTROLS

FIN TUBE	LOCATION	SLAVE	VALVE #
FT-1	RM. 118	5	VF 7213-252-4-1
FT-2	RM. 206C	36	VF 7213-252-4-2
FT-3	RM. 224B	39	VF 7213-252-4-1

Sequence of operation Convectors: Siebe will control the heating valve to maintain 65 degree occupied space temperature and 55 degree unoccupied space temperature.

Sequence of operation Fin-Tubes: Siebe will control Fin-Tube valve in sequence with VAV heating valve, both VAV heating valve and Fin-Tube valve shall control off same room sensor located in the area served.

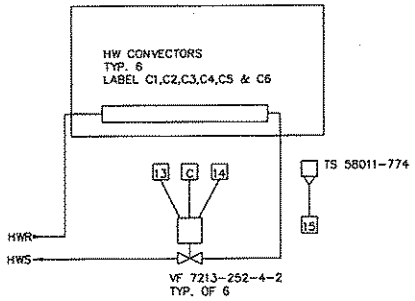

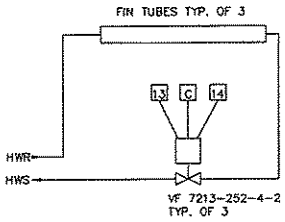

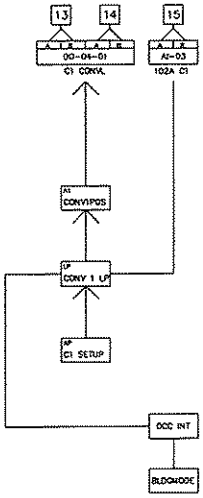

BLDG. 2007

MISC. REVISIONS: 8-31-98

SIEBE ENVIRONMENTAL CONTROLS

SIEBE ENVIRONMENTAL CONTROLS
3915 E. MAIN
SPOKANE, WA. 99202

DESCRIPTION
POWER MONITORING C2, C5, C6

JOB NAME SQUAD OPS/AMU
LOCATION F.A.F.B. SPOKANE, WA.
ARCHITECT WJA PS
ENGINEER WOOD / HARBINGER INC.
CONTRACTOR SMK MECHANICAL
ENGR'D BY R.RHODES
CHECKED BY
PROJECT NO. 965-98004-34
DRAWN BY D.S.

DRAWING NO. 98004-7
DATE 2-19-98 SHEET 7 OF 7