| SCHEDULE OF MATERIAL SUBMITTALS | PROJECT NUMBER | PROJECT TITLE | SOLICITATION/CONTRACT NO. |
|---|---|---|---|
| | SGBP 07-0019 | OFFUTT CONSTUCT VET CLINIC, B595 | |

| TO BE COMPLETED BY PROJECT ENGINEER | | | | | | | | | | | | TO BE COMPLETED BY CONTRACT ADMINISTRATOR | | | | | | | | |
|---|---|---|---|---|---|---|---|---|---|---|---|---|---|---|---|---|---|---|---|---|
| LINE NUMBER | ITEM OR DESCRIPTION OF ITEM, CONTRACT REFERENCE, TYPE OF SUBMITTAL | NO. OF COPIES REQUIRED | | | | | | | | | | REQUIRED SUBMISSION DATE | DATE RECEIVED IN CON-TRACTING | DATE TO CIVIL ENGI-NEERING | RETURN SUSPENSE DATE | SUBMITTAL NUMBERS | DATE CONTRACTOR NOTIFIED | | CONTRACTOR RESUBMITTAL | FINAL APPROVAL | REMARKS |
| | | CERTIFICATION OF COMPLIANCE | SHOP DRAWINGS | SAMPLES | COLOR SELECTION | MANUFACTURER'S RECOMMENDATIONS | MANUFACTURER'S WARRANTY | CATALOG DATA | OPERATING INSTRUCTIONS | TEST RESULTS | OTHER | | | | | | APPROVED | DIS-APPROVED | | | |
| 01 | 033000-CAST IN PLACE CONC | | 4 | | | | | | | | | see spec | | | | | | | | | Include concrete mix design |
| 02 | 042000 - UNIT MASONRY | | 4 | 1 | 4 | | | 4 | | | | see spec | | | | | | | | | |
| 03 | 047200 - CAST STONE MASONRY | | 4 | 1 | 4 | | | 4 | | | | see spec | | | | | | | | | |
| 04 | 055000 - METAL FABRICATIONS | | 4 | | | | | | | | | see spec | | | | | | | | | |
| 05 | 061000 - ROUGH CARPENTRY | | | | | | | 4 | | | | see spec | | | | | | | | | |
| 06 | 061600 - SHEATHING | | | | | | | 4 | | | | see spec | | | | | | | | | |
| 07 | 061753- FABRICATED WOOD TRUSS | | 4 | | | | | | | | | see spec | | | | | | | | | |
| 08 | 062013 - EXTERIOR FINISH CARPENTRY | | | 1 | 4 | | | 4 | | | | see spec | | | | | | | | | |
| 09 | 064023 - INTERIOR ARCHITECTURAL WOODWORK | | 4 | 1 | 4 | | | 4 | | | | see spec | | | | | | | | | |
| 10 | 072100 - THERMAL INSULATION | | | | | | | 4 | | | | see spec | | | | | | | | | |
| 11 | 074113 - METAL ROOF PANELS | | 4 | 1 | 4 | | | 4 | | | | see spec | | | | | | | | | |

| SCHEDULE OF MATERIAL SUBMITTALS | PROJECT NUMBER | PROJECT TITLE | SOLICITATION/CONTRACT NO. |
|---|---|---|---|
| | SGBP 07-0019 | OFFUTT CONSTUCT VET CLINIC, B595 | |

| TO BE COMPLETED BY PROJECT ENGINEER | | | | | | | | | | | | TO BE COMPLETED BY CONTRACT ADMINISTRATOR | | | | | | | | |
|---|---|---|---|---|---|---|---|---|---|---|---|---|---|---|---|---|---|---|---|---|
| LINE NUMBER | ITEM OR DESCRIPTION OF ITEM, CONTRACT REFERENCE, TYPE OF SUBMITTAL | NO. OF COPIES REQUIRED | | | | | | | | | | REQUIRED SUBMISSION DATE | DATE RECEIVED IN CON-TRACTING | DATE TO CIVIL ENGI-NEERING | RETURN SUSPENSE DATE | SUBMITTAL NUMBERS | DATE CONTRACTOR NOTIFIED | | CONTRACTOR RESUBMITTAL | FINAL APPROVAL | REMARKS |
| | | CERTIFICATION OF COMPLIANCE | SHOP DRAWINGS | SAMPLES | COLOR SELECTION | MANUFACTURER'S RECOMMENDATIONS | MANUFACTURER'S WARRANTY | CATALOG DATA | OPERATING INSTRUCTIONS | TEST RESULTS | OTHER | | | | | | APPROVED | DIS-APPROVED | | | |
| 12 | 077100 - ROOF SPECIALTIES | | 4 | 1 | 4 | | | | | | | | | | | | | | | | |
| 13 | 079200 - JOINT SEALANTS | | | 1 | 4 | | | 4 | | | | | | | | | | | | | |
| 14 | 081113 - HOLLOW METAL DOORS AND FRAMES | | 4 | | | | | 4 | | | | | | | | | | | | | |
| 15 | 081416 - FLUSH WOOD DOORS | | 4 | | | | | 4 | | | | | | | | | | | | | |
| 16 | 083113 - ACCESS DOORS AND FRAMES | | | | | | | 4 | | | | | | | | | | | | | |
| 17 | 084113 - ALUMINUM-FRAMED ENTRANCES AND STOREFRONTS | | 4 | | | | | 4 | | | | | | | | | | | | | |
| 18 | 085113 - ALUMINUM WINDOWS | | 4 | | | | 4 | 4 | | | | | | | | | | | | | |
| 19 | 08711 - DOOR HARDWARE (SCHEDULED BY NAMING PRODUCTS) | | 4 | 1 | | | | 4 | | | | | | | | | | | | | |
| 20 | 088000 - GLAZING | | | 1 | | | | 4 | | | | | | | | | | | | | |
| 21 | 088300 - MIRRORS | | | | | | | 4 | | | | | | | | | | | | | |

| SCHEDULE OF MATERIAL SUBMITTALS | PROJECT NUMBER<br>SGBP 07-0019 | PROJECT TITLE<br>OFFUTT CONSTUCT VET CLINIC, B595 | SOLICITATION/CONTRACT NO. |
|---|---|---|---|

| TO BE COMPLETED BY PROJECT ENGINEER | | | | | | | | | | | | TO BE COMPLETED BY CONTRACT ADMINISTRATOR | | | | | | | | |
|---|---|---|---|---|---|---|---|---|---|---|---|---|---|---|---|---|---|---|---|---|
| LINE NUMBER | ITEM OR DESCRIPTION OF ITEM, CONTRACT REFERENCE, TYPE OF SUBMITTAL | NO. OF COPIES REQUIRED | | | | | | | | | | REQUIRED SUBMISSION DATE | DATE RECEIVED IN CON-TRACTING | DATE TO CIVIL ENGI-NEERING | RETURN SUSPENSE DATE | SUBMITTAL NUMBERS | DATE CONTRACTOR NOTIFIED | | CONTRACTOR RESUBMITTAL | FINAL APPROVAL | REMARKS |
| | | CERTIFICATION OF COMPLIANCE | SHOP DRAWINGS | SAMPLES | COLOR SELECTION | MANUFACTURER'S RECOMMENDATIONS | MANUFACTURER'S WARRANTY | CATALOG DATA | OPERATING INSTRUCTIONS | TEST RESULTS | OTHER | | | | | | APPROVED | DIS-APPROVED | | | |
| 22 | 092216 - NON-STRUCTURAL METAL FRAMING | | | | | | | 4 | | | | see spec | | | | | | | | | |
| 23 | 092400 - PORTLAND CEMENT PLASTERING | | | | 4 | | | 4 | | | | see spec | | | | | | | | | |
| 24 | 092900 - GYPSUM BOARD | | | | | | | 4 | | | | see spec | | | | | | | | | |
| 25 | 093000 - TILING | | 4 | 1 | 4 | | | 4 | | | | see spec | | | | | | | | | |
| 26 | 095113 - ACOUSTICAL PANEL CEILINGS | | | 1 | 4 | | | 4 | | | | see spec | | | | | | | | | |
| 27 | 096513 - RESILIENT BASE AND ACCESSORIES | | | 1 | 4 | | | 4 | | | | see spec | | | | | | | | | |
| 28 | 099113 - EXTERIOR PAINTING | | | 1 | 4 | | | 4 | | | | see spec | | | | | | | | | |
| 29 | 099123 - INTERIOR PAINTING | | | 1 | 4 | | | 4 | | | | see spec | | | | | | | | | |
| 30 | 101400 - SIGNAGE | | 4 | | | | | 4 | | | | see spec | | | | | | | | | |
| 31 | 102800 - TOILET AND BATH ACCESSORIES | | | | | | | 4 | | | | see spec | | | | | | | | | |
| 32 | 104416 FIRE EXTINGUISHER | | | | | | | 4 | | | | see spec | | | | | | | | | |

| SCHEDULE OF MATERIAL SUBMITTALS | PROJECT NUMBER | PROJECT TITLE | SOLICITATION/CONTRACT NO. |
|---|---|---|---|
| | SGBP 07-0019 | OFFUTT CONSTUCT VET CLINIC, B595 | |

| TO BE COMPLETED BY PROJECT ENGINEER | | | | | | | | | | | | TO BE COMPLETED BY CONTRACT ADMINISTRATOR | | | | | | | | |
|---|---|---|---|---|---|---|---|---|---|---|---|---|---|---|---|---|---|---|---|---|
| LINE NUMBER | ITEM OR DESCRIPTION OF ITEM, CONTRACT REFERENCE, TYPE OF SUBMITTAL | NO. OF COPIES REQUIRED | | | | | | | | | | REQUIRED SUBMISSION DATE | DATE RECEIVED IN CON-TRACTING | DATE TO CIVIL ENGI-NEERING | RETURN SUSPENSE DATE | SUBMITTAL NUMBERS | DATE CONTRACTOR NOTIFIED | | CONTRACTOR RESUBMITTAL | FINAL APPROVAL | REMARKS |
| | | CERTIFICATION OF COMPLIANCE | SHOP DRAWINGS | SAMPLES | COLOR SELECTION | MANUFACTURER'S RECOMMENDATIONS | MANUFACTURER'S WARRANTY | CATALOG DATA | OPERATING INSTRUCTIONS | TEST RESULTS | OTHER | | | | | | APPROVED | DIS-APPROVED | | | |
| 33 | 210100 - WATER-BASED FIRE-SUPPRESSION SYSTEMS | | | | | | | 4 | 1 | | | see spec | | | | | | | | | Provide O & M Manuals and Warranty book |
| 34 | 220523 - VALVES | | | | | | | 4 | | | | see spec | | | | | | | | | |
| 35 | 220720 - PIPE INSULATION | | | | | | | 4 | | | | see spec | | | | | | | | | |
| 36 | 221123 - DOMESTIC WATER PUMPS | | 4 | | | | | 4 | 1 | | | see spec | | | | | | | | | Provide O & M Manuals and Warranty book |
| 37 | 221319 - PLUMBING SPECIALTIES | | | | | | | 4 | | | | see spec | | | | | | | | | |
| 38 | 223300 - DOMESTIC WATER HEATERS | | 4 | | | | | 4 | 1 | | | see spec | | | | | | | | | Provide O & M Manuals and Warranty book |
| 39 | 224000 - PLUMBING FIXTURES | | | | | | | 4 | 1 | | | see spec | | | | | | | | | Provide O & M Manuals and Warranty book |
| 40 | 230500 - BASIC MECHANICAL MATERIALS AND METHODS | | 4 | | | | | 4 | | | | see spec | | | | | | | | | |
| 41 | 230505- BASIC PIPING MATERIALS AND METHODS | | | | | | | 4 | | | | see spec | | | | | | | | | |
| 42 | 230700 - DUCT INSULATION | | | | | | | 4 | | | | see spec | | | | | | | | | |
| 43 | 230720 - PIPE INSULATION | | | | | | | 4 | | | | see spec | | | | | | | | | |

| SCHEDULE OF MATERIAL SUBMITTALS | PROJECT NUMBER | PROJECT TITLE | SOLICITATION/CONTRACT NO. |
|---|---|---|---|
| | SGBP 07-0019 | OFFUTT CONSTUCT VET CLINIC, B595 | |

| TO BE COMPLETED BY PROJECT ENGINEER | | | | | | | | | | | | TO BE COMPLETED BY CONTRACT ADMINISTRATOR | | | | | | | | |
|---|---|---|---|---|---|---|---|---|---|---|---|---|---|---|---|---|---|---|---|---|
| LINE NUMBER | ITEM OR DESCRIPTION OF ITEM, CONTRACT REFERENCE, TYPE OF SUBMITTAL | NO. OF COPIES REQUIRED | | | | | | | | | | REQUIRED SUBMISSION DATE | DATE RECEIVED IN CON-TRACTING | DATE TO CIVIL ENGI-NEERING | RETURN SUSPENSE DATE | SUBMITTAL NUMBERS | DATE CONTRACTOR NOTIFIED | | CONTRACTOR RESUBMITTAL | FINAL APPROVAL | REMARKS |
| | | CERTIFICATION OF COMPLIANCE | SHOP DRAWINGS | SAMPLES | COLOR SELECTION | MANUFACTURER'S RECOMMENDATIONS | MANUFACTURER'S WARRANTY | CATALOG DATA | OPERATING INSTRUCTIONS | TEST RESULTS | OTHER | | | | | | APPROVED | DIS-APPROVED | | | |
| 44 | 233113 - METAL DUCTS AND ACCESSORIES | | 4 | | | | | 4 | | | | see spec | | | | | | | | | |
| 45 | 233423 - POWER VENTILATORS | | 4 | | | | | 4 | 1 | | | see spec | | | | | | | | | Provide O & M Manuals and Warranty book |
| 46 | 235400 - FURNACES | | | | | | | 4 | 1 | | | see spec | | | | | | | | | Provide O & M Manuals and Warranty book |
| 47 | 236200-AIR TO AIR HEAT PUMPS | | | | | | | 4 | 1 | | | see spec | | | | | | | | | Provide O & M Manuals and Warranty book |
| 48 | 262416 - PANELBOARDS | | 4 | | | | | 4 | | | | see spec | | | | | | | | | |
| 49 | 262726 - WIRING DEVICES | | | | | | | 4 | | | | see spec | | | | | | | | | |
| 50 | 262816 – ENCLOSED SWITCHES AND CIRCUIT BREAKERS | | 4 | | | | | 4 | 1 | | | see spec | | | | | | | | | Provide O & M Manuals and Warranty book |
| 51 | 265100 INTERIOR LIGHTING | | | | | | | 4 | 1 | | | see spec | | | | | | | | | Provide O & M Manuals and Warranty book |
| 52 | 267200-TELCOMM | | 4 | | | | | 4 | | | | see spec | | | | | | | | | |
| 53 | 268100- FIRE ALARM | | 4 | | | | | 4 | 1 | | | see spec | | | | | | | | | Provide O & M Manuals and Warranty book |
| 54 | 313116 - TERMITE CONTROL | | | | | | 4 | 4 | | | | see spec | | | | | | | | | |
| 55 | 323113 - CHAIN LINK FENCES AND GATES | | 4 | | | | | 4 | | | | see spec | | | | | | | | | |

| SCHEDULE OF MATERIAL SUBMITTALS | PROJECT NUMBER<br>SGBP 07-0019 | PROJECT TITLE<br>OFFUTT CONSTUCT VET CLINIC, B595 | SOLICITATION/CONTRACT NO. |
|---|---|---|---|

| TO BE COMPLETED BY PROJECT ENGINEER | | | | | | | | | | | | | TO BE COMPLETED BY CONTRACT ADMINISTRATOR | | | | | | | | |
|---|---|---|---|---|---|---|---|---|---|---|---|---|---|---|---|---|---|---|---|---|---|
| LINE NUMBER | ITEM OR DESCRIPTION OF ITEM, CONTRACT REFERENCE, TYPE OF SUBMITTAL | NO. OF COPIES REQUIRED | | | | | | | | | | REQUIRED SUBMISSION DATE | DATE RECEIVED IN CON-TRACTING | DATE TO CIVIL ENGI-NEERING | RETURN SUSPENSE DATE | SUBMITTAL NUMBERS | DATE CONTRACTOR NOTIFIED | | CONTRACTOR RESUBMITTAL | FINAL APPROVAL | REMARKS |
| | | CERTIFICATION OF COMPLIANCE | SHOP DRAWINGS | SAMPLES | COLOR SELECTION | MANUFACTURER'S RECOMMENDATIONS | MANUFACTURER'S WARRANTY | CATALOG DATA | OPERATING INSTRUCTIONS | TEST RESULTS | OTHER | | | | | | APPROVED | DIS-APPROVED | | | |
| 56 | 329200 - TURF AND GRASSES | | | | | | | 4 | | | | see spec | | | | | | | | | |
| 57 | 329300 - PLANTS | | | | | | | 4 | | | | see spec | | | | | | | | | |
| 58 | SEC 1A – DAILY LOGS | | | | | | | | | | 4 | see spec | | | | | | | | | |
| 59 | SEC 1A- TRAFFIC CONTROL | | | | | | | | | | 4 | see spec | | | | | | | | | |
| 60 | SEC 1A- AF3064 PROGRESS SCHEDULE | | | | | | | | | | 4 | see spec | | | | | | | | | |
| 61 | SEC 1A- SECURITY REQUIRMENT | | | | | | | | | | 4 | see spec | | | | | | | | | |
| 62 | SEC 1A- CONST. PERMINTS | | | | | | | | | | 4 | see spec | | | | | | | | | |
| 63 | SEC 1A- TERMINTE TREATMENT | | | | | | | | | | 4 | see spec | | | | | | | | | |
| 64 | SEC 1B-AS CONSTRUCT DRAWINGS | | | | | | | | | | 4 | see spec | | | | | | | | | |
| 65 | SEC 1B- RECORD DRAWINGS/ GUARANTEES | | | | | | 4 | | | | | see spec | | | | | | | | | |
| 66 | SEC 1B- DD FORM 1354 | | | | | | | | | | 4 | see spec | | | | | | | | | |

| SCHEDULE OF MATERIAL SUBMITTALS | PROJECT NUMBER | PROJECT TITLE | SOLICITATION/CONTRACT NO. |
|---|---|---|---|
| | SGBP 07-0019 | OFFUTT CONSTUCT VET CLINIC, B595 | |

| TO BE COMPLETED BY PROJECT ENGINEER | | | | | | | | | | | | | TO BE COMPLETED BY CONTRACT ADMINISTRATOR | | | | | | | | |
|---|---|---|---|---|---|---|---|---|---|---|---|---|---|---|---|---|---|---|---|---|---|
| LINE NUMBER | ITEM OR DESCRIPTION OF ITEM, CONTRACT REFERENCE, TYPE OF SUBMITTAL | NO. OF COPIES REQUIRED | | | | | | | | | | REQUIRED SUBMISSION DATE | DATE RECEIVED IN CON-TRACTING | DATE TO CIVIL ENGI-NEERING | RETURN SUSPENSE DATE | SUBMITTAL NUMBERS | DATE CONTRACTOR NOTIFIED | | CONTRACTOR RESUBMITTAL | FINAL APPROVAL | REMARKS |
| | | CERTIFICATION OF COMPLIANCE | SHOP DRAWINGS | SAMPLES | COLOR SELECTION | MANUFACTURER'S RECOMMENDATIONS | MANUFACTURER'S WARRANTY | CATALOG DATA | OPERATING INSTRUCTIONS | TEST RESULTS | OTHER | | | | | | APPROVED | DIS-APPROVED | | | |
| 67 | SEC 1A-BELOW GROUND SURVEY | | | | | | | 4 | | | | see spec | | | | | | | | | |
| 68 | SEC 1C-HAZARDOUS MATERIAL AND SAFETY DATA SHEETS | | | | | | | 4 | | | | see spec | | | | | | | | | |
| | | | | | | | | | | | | | | | | | | | | | |
| | | | | | | | | | | | | | | | | | | | | | |
| | | | | | | | | | | | | | | | | | | | | | |
| | | | | | | | | | | | | | | | | | | | | | |
| | | | | | | | | | | | | | | | | | | | | | |
| | | | | | | | | | | | | | | | | | | | | | |
| | | | | | | | | | | | | | | | | | | | | | |
| | | | | | | | | | | | | | | | | | | | | | |
| | | | | | | | | | | | | | | | | | | | | | |

# SPECIFICATIONS

**PROJECT NO. SGBP 07-0019**
**DRAWING NO. OFF-B-6052**
**CONSTRUCT VETERINARY CLINIC, B595**
**OFFUTT AFB, NEBRASKA**

**30 MAY 2008**

**Offutt AFB**
**Nebraska**

**SECTION 011000 - SUMMARY**

PART 1 - GENERAL

1.1 RELATED DOCUMENTS

A. Drawings and general provisions of the Contract, including General and Supplementary Conditions and other Division 01 Specification Sections, apply to this Section.

1.2 SUMMARY

A. Section includes:

1. Project information.
2. Work covered by Contract Documents.
3. Contractor-furnished, Owner-installed products.
4. Access to site.
5. Work restrictions.
6. .

B. Related Section:

1. Division 01 Section "Temporary Facilities and Controls" for limitations and procedures governing temporary use of Owner's facilities.

1.3 PROJECT INFORMATION

A. Project Identification: OFFUTT AFB SGBP 07-0019 Construct Veterinary Clinic, B595.

1. Project Location: OFFUTT AFB Building 595.

B. Owner: OFFUTT AFB

1. Owner's Representative: 55th Contracting Squadron

C. Architect: Alley Poyner Macchietto Architecture.

1.4 WORK COVERED BY CONTRACT DOCUMENTS

A. The Work of the Project is defined by the Contract Documents and consists of the following:

1. The project is the construction of a new Veterinarian Clinic on Offutt Air Force Base. It is Business Occupancy with a Construction Type IIIB masonry building with 3,563 sqft.

B. Type of Contract

1. Project will be constructed under a single prime contract.
   a.

1.5 CONTRACTOR -INSTALLED PRODUCTS, OWNER -FURNISHED

A. Owner shall furnish products indicated. The Work includes unloading, handling, installing, storing, and protecting Contractor-furnished products as directed and turning over to Owner at Project closeout.

B. Contractor -Installed Product Owner -Furnished s, :

1. There are some owner furnished and contractor installed equipment. See Drawings and Section 113000 for specifics.

1.6 ACCESS TO SITE

A. General: Contractor shall have full use of Project site for construction operations during construction period. Contractor's use of Project site is limited only by Owner's right to perform work or to retain other contractors on portions of Project.

B. General: Contractor shall have limited use of Project site for construction operations as indicated on Drawings by the Contract limits and as indicated by requirements of this Section.

C. Use of Site: Limit use of Project site to work in areas within the Contract limits indicated. Do not disturb portions of Project site beyond areas in which the Work is indicated.

1. Limits: Confine construction operations to construction site, remaining Offutt Base area is restricted.
2. Limits: Limit site disturbance, including earthwork and clearing of vegetation, to 40 feet (12.2 m) beyond building perimeter; 10 feet (3 m) beyond surface walkways, patios, surface parking, and utilities less than 12 inches (300 mm) in diameter; 15 feet (4.5 m) beyond primary roadway curbs and main utility branch trenches; and 25 feet (7.6 m) beyond constructed areas with permeable surfaces (such as pervious paving areas, stormwater detention facilities, and playing fields) that require additional staging areas in order to limit compaction in the constructed area.
3. Driveways, Walkways and Entrances: Keep driveways loading areas**,** and entrances serving premises clear and available to Owner, Owner's employees, and emergency vehicles at all times. Do not use these areas for parking or storage of materials.

   a. Schedule deliveries to minimize use of driveways and entrances by construction operations.
   b. Schedule deliveries to minimize space and time requirements for storage of materials and equipment on-site.

D. Condition of Existing Building: Maintain portions of existing building affected by construction operations in a weathertight condition throughout construction period. Repair damage caused by construction operations.

1.7 WORK RESTRICTIONS

A. Work Restrictions, General: Comply with restrictions on construction operations.

1. See Section 1.A of this specification for other requirements , if contradictions occur see referenced section.

2. Comply with limitations on use of public streets and other requirements of authorities having jurisdiction.

B. On-Site Work Hours: Limit work in the existing building to normal business working hours of 7:30 a.m. to 5:00 p.m., Monday through Friday, except as otherwise indicated. No work allowed on Federal Holidays.

1. Weekend Hours: Shall be coordinated on an as-needed basis.
2. Early Morning Hours: Shall be coordinated on an as-needed basis.
3. Hours for Utility Shutdowns: Coordinate per Special Conditions Section 1.
4. Hours for Core Drilling or other noisy activity: See Offutt Regulations.

C. Existing Utility Interruptions: Do not interrupt utilities serving facilities occupied by Owner or others unless permitted under the following conditions and then only after providing temporary utility services according to requirements indicated:

1. Notify 55th Contracting Squadron not less than fourteen (14) days in advance of proposed utility interruptions.
2. Obtain 55th Contracting Squadron written permission before proceeding with utility interruptions.

D. Noise, Vibration, and Odors: Coordinate operations that may result in high levels of noise and vibration, odors, or other disruption to Owner occupancy with Owner.

1. Notify 55th Contracting Squadron not less than two days in advance of proposed disruptive operations.
2. Obtain 55th Contracting Squadron written permission before proceeding with disruptive operations.

E. Nonsmoking Building: Smoking is not permitted within the building or within 25 feet (8 m) of entrances, operable windows, or outdoor air intakes.

F. Controlled Substances: Use of tobacco products and other controlled substances is not permitted.

G. Employee Identification: Identification must be obtained through the Construction Management Office and the Project Inspector (Contact for tags) will be assigned at the pre-construction meeting. Identification tags for Contractor personnel working on the Project site are required. Contractor will require personnel to utilize identification tags at all times.

H. Employee Screening: Comply with Owner's requirements regarding drug and background screening of Contractor personnel working on the Project site.

1. Maintain list of approved screened personnel with Owner's Representative.

## 1.8 SPECIFICATION AND DRAWING CONVENTIONS

A. Specification Content: The Specifications use certain conventions for the style of language and the intended meaning of certain terms, words, and phrases when used in particular situations. These conventions are as follows:

1. Imperative mood and streamlined language are generally used in the Specifications. The words "shall," "shall be," or "shall comply with," depending on the context, are implied where a colon (:) is used within a sentence or phrase.
2. Specification requirements are to be performed by Contractor unless specifically stated otherwise.

B. Division 01 General Requirements: Requirements of Sections in Division 01 apply to the Work of all Sections in the Specifications.

C. Drawing Coordination: Requirements for materials and products identified on the Drawings are described in detail in the Specifications. One or more of the following are used on the Drawings to identify materials and products:

1. Terminology: Materials and products are identified by the typical generic terms used in the individual Specifications Sections.
2. Abbreviations: Materials and products are identified by abbreviations published as part of the U.S. National CAD Standard and scheduled on Drawings.
3. Keynoting: Materials and products are identified by reference keynotes referencing Specification Section numbers found in this Project Manual.

1.9 MISCELLANEOUS PROVISIONS

A. Testing and Inspections:
1. Contractor is responsible for all special inspections. Contractor will engage a qualified independent testing and inspecting agency to perform field tests and inspections and prepare test reports.

PART 2 - PRODUCTS (Not Used)

PART 3 - EXECUTION (Not Used)

**END OF SECTION 011000**

# SECTION 024119 - SELECTIVE STRUCTURE DEMOLITION

## PART 1 - GENERAL

### 1.1 RELATED DOCUMENTS

A. Drawings and general provisions of the Contract, including General and Supplementary Conditions and other Division 01 Specification Sections, apply to this Section.

### 1.2 SUMMARY

A. This Section includes the following:

1. Demolition, removal and slavage of selected site elements.

B. Related Sections include the following:

1. Division 01 Sections

### 1.3 DEFINITIONS

A. Remove: Detach items from existing construction and legally dispose of them off-site, unless indicated to be removed and salvaged or removed and reinstalled.

### 1.4 MATERIALS OWNERSHIP

A. Historic items, relics, and similar objects including, but not limited to, cornerstones and their contents, commemorative plaques and tablets, antiques, and other items of interest or value to Owner that may be encountered during selective demolition remain Owner's property. Carefully remove and salvage each item or object in a manner to prevent damage and deliver promptly to Owner.

### 1.5 QUALITY ASSURANCE

A. Demolition Firm Qualifications: An experienced firm that has specialized in demolition work similar in material and extent to that indicated for this Project.

B. Regulatory Requirements: Comply with governing EPA notification regulations before beginning selective demolition. Comply with hauling and disposal regulations of authorities having jurisdiction.

C. Standards: Comply with ANSI A10.6 and NFPA 241.

1.6 PROJECT CONDITIONS

A. Conditions existing at time of inspection for bidding purpose will be maintained by Owner as far as practical.

a. Notify Owner of discrepancies between existing conditions and Drawings before proceeding with selective demolition.

B. Hazardous Materials: It is not expected that hazardous materials will be encountered in the Work.

1. If materials suspected of containing hazardous materials are encountered, do not disturb; immediately notify Owner. Owner will remove hazardous materials under a separate contract.

C. Storage or sale of removed items or materials on-site is not permitted.

D. Utility Service: Maintain existing utilities indicated to remain in service and protect them against damage during selective demolition operations.

1. Maintain fire-protection facilities in service during selective demolition operations.

PART 2 - PRODUCTS (Not Used)

PART 3 - EXECUTION

3.1 GENERAL

A. General, See Section “Environmental Special Conditions 1.C of this specification related to the following paragraphs.

3.2 EXAMINATION

A. Verify that utilities have been disconnected and capped.

B. Survey existing conditions and correlate with requirements indicated to determine extent of selective demolition required.

C. When unanticipated mechanical, electrical, or structural elements that conflict with intended function or design are encountered, investigate and measure the nature and extent of conflict. Promptly submit a written report to Owner.

D. Perform surveys as the Work progresses to detect hazards resulting from selective demolition activities.

3.3 UTILITY SERVICES AND MECHANICAL/ELECTRICAL SYSTEMS

A. Existing Services/Systems: Maintain services/systems indicated to remain and protect them against damage during selective demolition operations.

1. Comply with requirements for existing services/systems interruptions specified in Division 01 Section "Summary."

B. Service/System Requirements: Locate, identify, disconnect, and seal or cap off indicated utility services and mechanical/electrical systems serving areas to be selectively demolished.

## 3.4 PREPARATION

A. Site Access and Temporary Controls: Conduct selective demolition and debris-removal operations to ensure minimum interference with roads, streets, walks, walkways, and other adjacent occupied and used facilities.

1. Comply with requirements for access and protection specified in Division 01 Section "Temporary Facilities and Controls."

B. Temporary Facilities: Provide temporary barricades and other protection required to prevent injury to people and damage to adjacent buildings and facilities to remain.

1. Provide protection to ensure safe passage of people around selective demolition area and to and from occupied portions of building.
2. Comply with requirements for temporary enclosures, dust control, heating, and cooling specified in Division 01 Section "Temporary Facilities and Controls."

## 3.5 SELECTIVE DEMOLITION, GENERAL

A. General: Demolish and remove existing construction only to the extent required by new construction and as indicated. Use methods required to complete the Work within limitations of governing regulations and as follows:

1. Dispose of demolished items and materials promptly. Comply with requirements in Division 01 Section "Construction Waste Management and Disposal.

## 3.6 SELECTIVE DEMOLITION PROCEDURES FOR SPECIFIC MATERIALS

A. Concrete: Demolish in sections. Cut concrete full depth at junctures with construction to remain and at regular intervals, using power-driven saw, then remove concrete between saw cuts.

B. Fence: Remove fencing and save for reuse as indicated on the drawings. Store salvaged fencing in a protected area to prevent damage prior to reinstallation.

## 3.7 DISPOSAL OF DEMOLISHED MATERIALS

A. General: Except for items or materials indicated to be **recycled,** reused, salvaged, reinstalled, or otherwise indicated to remain Owner's property, remove demolished materials from Project site and legally dispose of them in an EPA-approved landfill.

1. Do not allow demolished materials to accumulate on-site.
2. Remove and transport debris in a manner that will prevent spillage on adjacent surfaces and areas.
3. Remove debris from elevated portions of building by chute, hoist, or other device that will convey debris to grade level in a controlled descent.
4. Comply with requirements specified in Division 01 Section "Construction Waste Management and Disposal."

B. Burning: Do not burn demolished materials.

C. Disposal: Transport demolished materials off Owner's property and legally dispose of them.

3.8 CLEANING

A. Clean adjacent structures and improvements of dust, dirt, and debris caused by selective demolition operations. Return adjacent areas to condition existing before selective demolition operations began.

**END OF SECTION 024119**

**SECTION 033000 - CAST-IN-PLACE CONCRETE**

PART 1 - GENERAL

1.1 SUMMARY

A. This Section specifies cast-in place concrete, including formwork, reinforcement, concrete materials, mixture design, placement procedures, and finishes.

B. See Division 31 Section "Earth Moving" for drainage fill under slabs-on-grade.

1.2 SUBMITTALS

A. Product Data: For each type of product indicated.

B. Design Mixtures: For each concrete mixture.

C. Shop Drawings: For steel reinforcement. Material: test reports & certificates.

1.3 QUALITY ASSURANCE

A. Manufacturer Qualifications: A firm experienced in manufacturing ready-mixed concrete products and that complies with ASTM C 94/C 94M requirements for production facilities and equipment.

1. Manufacturer certified according to NRMCA's "Certification of Ready Mixed Concrete Production Facilities."

B. Testing Agency Qualifications: An independent agency, acceptable to authorities having jurisdiction, qualified according to ASTM C 1077 and ASTM E 329 for testing indicated, as documented according to ASTM E 548.

1. Personnel conducting field tests shall be qualified as ACI Concrete Field Testing Technician, Grade 1, according to ACI CP-01 or an equivalent certification program.

C. ACI Publications: Comply with the following unless modified by requirements in the Contract Documents:

1. ACI 301, "Specification for Structural Concrete," Sections 1 through 5.
2. ACI 117, "Specifications for Tolerances for Concrete Construction and Materials."

D. Preinstallation Conference: Conduct conference at Project site.

PART 2 - PRODUCTS

2.1 STEEL REINFORCEMENT

A. Reinforcing Bars: ASTM A 615, Grade 60, deformed.

B. Plain-Steel Welded Wire Reinforcement: ASTM A 185, plain, fabricated from as-drawn steel wire into flat sheets.

C. Bar Supports: Bolsters, chairs, spacers, and other devices for spacing, supporting, and fastening reinforcing bars and welded wire reinforcement in place. Manufacture bar supports from steel wire, plastic, or precast concrete according to CRSI's "Manual of Standard Practice."

## 2.2 CONCRETE MATERIALS

A. Cementitious Material: Use the following cementitious materials, of the same type, brand, and source, throughout Project:

1. Portland Cement: ASTM C 150, Type I or III. Supplement with the following:

   a. Fly Ash: ASTM C 618, Class C.
   b. Ground Granulated Blast-Furnace Slag: ASTM C 989, Grade 100 or 120.

B. Normal-Weight Aggregates: ASTM C 33, graded, 3/4-inch nominal maximum coarse-aggregate size.

1. Fine Aggregate: Free of materials with deleterious reactivity to alkali in cement.

C. Water: ASTM C 94 potable.

D. Air-Entraining Admixture: ASTM C 260.

E. Chemical Admixtures: Provide admixtures certified by manufacturer to be compatible with other admixtures and that will not contribute water-soluble chloride ions exceeding those permitted in hardened concrete. Do not use calcium chloride or admixtures containing calcium chloride.

1. Water-Reducing Admixture: ASTM C 494, Type A.
2. Retarding Admixture: ASTM C 494, Type B.
3. Water-Reducing and Retarding Admixture: ASTM C 494, Type D.
4. High-Range, Water-Reducing Admixture: ASTM C 494, Type F.
5. High-Range, Water-Reducing and Retarding Admixture: ASTM C 494, Type G.
6. Plasticizing and Retarding Admixture: ASTM C 1017, Type II.

## 2.3 VAPOR RETARDERS

A. 60 Mil. HDPE Membrane as specified by geotechnical engineer.

## 2.4 CURING MATERIALS

A. Evaporation Retarder: Waterborne, monomolecular film forming, manufactured for application to fresh concrete.

B. Absorptive Cover: AASHTO M 182, Class 2, burlap cloth made from jute or kenaf, weighing approximately 9 oz./sq. yd. when dry.

C. Moisture-Retaining Cover: ASTM C 171, polyethylene film or white burlap-polyethylene sheet.

D. Water: Potable.

E. Clear, Waterborne, Membrane-Forming Curing Compound: ASTM C 309, Type 1, Class B, dissipating.

F. Clear, Solvent-Borne, Membrane-Forming Curing and Sealing Compound: ASTM C 1315, Type 1, Class A.

G. Clear, Waterborne, Membrane-Forming Curing and Sealing Compound: ASTM C 1315, Type 1, Class A.

## 2.5 RELATED MATERIALS

A. Expansion- and Isolation-Joint-Filler Strips: ASTM D 1752, cork or self-expanding cork.

## 2.6 CONCRETE MIXTURES

A. Prepare design mixtures for each type and strength of concrete, proportioned on the basis of laboratory trial mixture or field test data, or both, according to ACI 301.

B. Cementitious Materials: Use fly ash, pozzolan, ground granulated blast-furnace slag, and silica fume as needed to reduce the total amount of portland cement, which would otherwise be used, by not less than 40 percent.

C. Proportion normal-weight concrete mixture as follows:

1. Minimum Compressive Strength: 4000 psi at 28 days.
2. Maximum Water-Cementitious Materials Ratio: 0.45.
3. Slump Limit: 4 inches for concrete with verified slump of 2 to 4 inches before adding high-range water-reducing admixture or plasticizing admixture, plus or minus 1 inch.
4. Air Content: 6 percent, plus or minus 1.5 percent at point of delivery for 3/4-inch nominal maximum aggregate size.
5. Air Content: Do not allow air entrainment for concrete slabs.

## 2.7 FABRICATING REINFORCEMENT

A. Fabricate steel reinforcement according to CRSI's "Manual of Standard Practice."

## 2.8 CONCRETE MIXING

A. Ready-Mixed Concrete: Measure, batch, mix, and deliver concrete according to ASTM C 94, and furnish batch ticket information.

1. When air temperature is between 85 and 90 deg F reduce mixing and delivery time from 1-1/2 hours to 75 minutes; when air temperature is above 90 deg F reduce mixing and delivery time to 60 minutes.

PART 3 - EXECUTION

3.1 FORMWORK

A. Design, erect, shore, brace, and maintain formwork according to ACI 301 to support vertical, lateral, static, and dynamic loads, and construction loads that might be applied, until structure can support such loads.

B. Construct formwork so concrete members and structures are of size, shape, alignment, elevation, and position indicated, within tolerance limits of ACI 117.

C. Chamfer exterior corners and edges of permanently exposed concrete.

3.2 EMBEDDED ITEMS

A. Place and secure anchorage devices and other embedded items required for adjoining work that is attached to or supported by cast-in-place concrete. Use setting drawings, templates, diagrams, instructions, and directions furnished with items to be embedded.

3.3 VAPOR RETARDERS

A. Plastic Vapor Retarders: Place, protect, and repair vapor retarders according to ASTM E 1643 and manufacturer's written instructions.

1. Lap joints 6 inches and seal with manufacturer's recommended tape.

3.4 STEEL REINFORCEMENT

A. General: Comply with CRSI's "Manual of Standard Practice" for placing reinforcement.

1. Do not cut or puncture vapor retarder. Repair damage and reseal vapor retarder before placing concrete.

3.5 JOINTS

A. General: Construct joints true to line with faces perpendicular to surface plane of concrete.

B. Construction Joints: Install so strength and appearance of concrete are not impaired, at locations indicated or as approved by Architect.

C. Contraction Joints in Slabs-on-Grade: Form weakened-plane contraction joints, sectioning concrete into areas as indicated. Construct contraction joints for a depth equal to at least one-fourth of concrete thickness as follows:

1. Grooved Joints: Form contraction joints after initial floating by grooving and finishing each edge of joint to a radius of 1/8 inch. Repeat grooving of contraction joints after applying surface finishes. Eliminate groover tool marks on concrete surfaces.
2. Sawed Joints: Form contraction joints with power saws equipped with shatterproof abrasive or diamond-rimmed blades. Cut 1/8-inch wide joints into concrete when cutting action will not tear, abrade, or otherwise damage surface and before concrete develops random contraction cracks.

D. Isolation Joints in Slabs-on-Grade: After removing formwork, install joint-filler strips at slab junctions with vertical surfaces, such as column pedestals, foundation walls, grade beams, and other locations, as indicated.

## 3.6 CONCRETE PLACEMENT

A. Before placing concrete, verify that installation of formwork, reinforcement, and embedded items is complete and that required inspections have been performed.

B. Deposit concrete continuously in one layer or in horizontal layers of such thickness that no new concrete will be placed on concrete that has hardened enough to cause seams or planes of weakness. If a section cannot be placed continuously, provide construction joints as indicated. Deposit concrete to avoid segregation.

1. Consolidate placed concrete with mechanical vibrating equipment according to ACI 301.

C. Cold-Weather Placement: Comply with ACI 306.1.

D. Hot-Weather Placement: Comply with ACI 301.

## 3.7 FINISHING FORMED SURFACES

A. Rough-Formed Finish: As-cast concrete texture imparted by form-facing material with tie holes and defects repaired and patched. Remove fins and other projections that exceed specified limits on formed-surface irregularities.

1. Apply to concrete surfaces not exposed to public view.

## 3.8 FINISHING FLOORS AND SLABS

A. General: Comply with ACI 302.1R recommendations for screeding, restraightening, and finishing operations for concrete surfaces. Do not wet concrete surfaces.

B. Float Finish: Consolidate surface with power-driven floats or by hand floating if area is small or inaccessible to power driven floats. Restraighten, cut down high spots, and fill low spots. Repeat float passes and restraightening until surface is left with a uniform, smooth, granular texture.

1. Apply float finish to surfaces indicated by architect.

C. Trowel Finish: After applying float finish, apply first troweling and consolidate concrete by hand or power-driven trowel. Continue troweling passes and restraighten until surface is free of trowel marks and uniform in texture and appearance. Grind smooth any surface defects that would telegraph through applied coatings or floor coverings.

1. Apply a trowel finish to surfaces indicated by architect.
2. Finish and measure surface so gap at any point between concrete surface and an unleveled, freestanding, 10-foot long straightedge resting on 2 high spots and placed anywhere on the surface does not exceed 1/4 inch.

## 3.9 CONCRETE PROTECTING AND CURING

A. General: Protect freshly placed concrete from premature drying and excessive cold or hot temperatures. Comply with ACI 306.1 for cold-weather protection and ACI 301 for hot-weather protection during curing.

B. Evaporation Retarder: Apply evaporation retarder to unformed concrete surfaces if hot, dry, or windy conditions cause moisture loss approaching 0.2 lb/sq. ft. x h before and during finishing operations. Apply according to manufacturer's written instructions after placing, screeding, and bull floating or darbying concrete, but before float finishing.

C. Cure concrete according to ACI 308.1, by one or a combination of the following methods:

1. Moisture Curing: Keep surfaces continuously moist for not less than seven days.
2. Moisture-Retaining-Cover Curing: Cover concrete surfaces with moisture-retaining cover for curing concrete, placed in widest practicable width, with sides and ends lapped at least 12 inches and sealed by waterproof tape or adhesive. Cure for not less than seven days. Immediately repair any holes or tears during curing period using cover material and waterproof tape.
3. Curing Compound: Apply uniformly in continuous operation by power spray or roller according to manufacturer's written instructions. Recoat areas subjected to heavy rainfall within three hours after initial application. Maintain continuity of coating and repair damage during curing period.

    a. After curing period has elapsed, remove curing compound without damaging concrete surfaces by method recommended by curing compound manufacturer.

4. Curing and Sealing Compound: Apply uniformly to floors and slabs indicated in a continuous operation by power spray or roller according to manufacturer's written instructions. Recoat areas subjected to heavy rainfall within three hours after initial application. Repeat process 24 hours later and apply a second coat. Maintain continuity of coating and repair damage during curing period.

## 3.10 CONCRETE SURFACE REPAIRS

A. Defective Concrete: Repair and patch defective areas when approved by Architect. Remove and replace concrete that cannot be repaired and patched to Architect's approval.

## 3.11 FIELD QUALITY CONTROL

A. Testing and Inspecting: Contractor will engage a qualified testing and inspecting agency to perform tests and inspections and to submit reports.

B. Inspections:

1. Steel reinforcement placement.
2. Steel reinforcement welding.
3. Headed bolts and studs.
4. Verification of use of required design mixture.
5. Concrete placement, including conveying and depositing.
6. Curing procedures and maintenance of curing temperature.
7. Verification of concrete strength before removal of shores and forms from beams and slabs.

C. Concrete Tests: Testing of composite samples of fresh concrete obtained according to ASTM C 172 shall be performed according to the following requirements:

1. Testing Frequency: Obtain one composite sample for each day's pour of each concrete mixture exceeding 5 cu. yd., but less than 15 cu. yd., plus one set for each additional 50 cu. yd. (38 cu. m) or fraction thereof.

2. Slump: ASTM C 143/C 143M; one test at point of placement for each composite sample, but not less than one test for each day's pour of each concrete mixture. Perform additional tests when concrete consistency appears to change.
3. Air Content: ASTM C 231, pressure method, for normal-weight concrete; one test for each composite sample, but not less than one test for each day's pour of each concrete mixture.
4. Concrete Temperature: ASTM C 1064/C 1064M; one test hourly when air temperature is 40 deg F and below and when 80 deg F and above, and one test for each composite sample.
5. Compression Test Specimens: ASTM C 31.

    a. Cast and field cure three sets of two standard cylinder specimens for each composite sample.

6. Compressive-Strength Tests: ASTM C 39/C 39M; test one set of two field-cured specimens at 7 days and one set of two specimens at 28 days. Hold third set for possible retesting for 56 days unless otherwise notified.

7. When strength of field-cured cylinders is less than 85 percent of companion laboratory-cured cylinders, Contractor shall evaluate operations and provide corrective procedures for protecting and curing in-place concrete.
8. Strength of each concrete mixture will be satisfactory if every average of any three consecutive compressive-strength tests equals or exceeds specified compressive strength and no compressive-strength test value falls below specified compressive strength by more than 500 psi.
9. Test results shall be reported in writing to, concrete manufacturer, and Contractor within 48 hours of testing. Reports of compressive-strength tests shall contain Project identification name and number, date of concrete placement, name of concrete testing and inspecting agency, location of concrete batch in Work, design compressive strength at 28 days, concrete mixture proportions and materials, compressive breaking strength, and type of break for both 7- and 28-day tests.
10. Additional Tests: Testing and inspecting agency shall make additional tests of concrete when test results indicate that slump, air entrainment, compressive strengths, or other requirements have not been met, as directed by Contractor. Testing and inspecting agency may conduct tests to determine adequacy of concrete by cored cylinders complying with ASTM C 42/C 42M or by other methods as directed by Contractor.
11. Additional testing and inspecting, at Contractor's expense, will be performed to determine compliance of replaced or additional work with specified requirements.
12. Correct deficiencies in the Work that test reports and inspections indicate dos not comply with the Contract Documents.

**END OF SECTION 033000**

**SECTION 033510 – SPECIAL CONCRETE FLOOR FINISHES**

PART 1 - GENERAL

1.1 SUMMARY

A. This section includes the following.
1. Applying Sealer and Hardener, and polishing concrete to specified finish level.

B. Related Work:
1. Section 03300 Cast-In-Place Concrete.

1.2 REFERENCES

A. American Society for Testing and Materials.
1. ASTM-C779, Standard Test Method for Abrasion Resistance of Horizontal Concrete Surfaces.
2. ASTM G23-81, Ultraviolet Light and Water Spray.
3. ASTM C805, Impact Strength.

B. American Concrete Institute
1. ACI 302. 1R-89, Guide for Concrete Floor and Slab Construction.

1.3 SUBMITTALS

A. Product Data:
1. Submit special concrete finishes describing product to be provided, giving manufacturer's name and product name for the specified material proposed to be provided under this section.
2. Submit special concrete finishes manufacturer's recommended installation procedures; which when approved by the Architect, will become the basis for accepting or rejecting actual installation procedures used on the work.
3. Follow all special concrete finishes published manufacturer's installation instructions.

B. Test Reports:
1. Provide certified test reports, prepared by an independent testing laboratory, confirming compliance with specified performance criteria.

1.4 QUALITY ASSURANCE

A. Installer Qualifications:
1. Use an experienced installer and adequate number of skilled workmen who are thoroughly trained and experienced in the necessary craft.
2. Applicator shall be familiar with the specified requirements and the methods needed for proper performance of work of this section.

B. Manufacturer's Certification:
1. Provide letter of certification from concrete finish manufacturer stating that installer is certified applicator of special concrete finishes, and is familiar with proper procedures and installation requirements required by the manufacturer.
a.

C. Protection:
1. No satisfactory chemical or cleaning procedure is available to remove petroleum stains from the concrete surface. Prevention is therefore essential.
   a. All hydraulic powered equipment must be diapered to avoid staining of the concrete.
   b. No trade will park vehicles on the inside slab scheduled to receive polishing. If necessary to complete their scope of work, drop cloths will be placed under vehicles at all times.
   c. No pipe cutting machine will be used on the inside floor slab.
   d. Steel will not be placed on interior slab to avoid rust staining.
   e. Acids and acidic detergents will not come into contract with slab.
   f. All trades informed that the slab must be protected at all times.

1.5 DELIVERY, STORAGE, AND HANDLING

A. Deliver materials in original containers, with seal's unbroken, bearing manufacturer labels indicating brand name and directions for storage.

B. Dispense special concrete finish material from factory numbered and sealed containers. Maintain record of container numbers.

1.6 PROJECT CONDITIONS

A. Environmental limitations:
1. Comply with manufacturers written instructions for substrate temperature and moisture content, ambient temperature and humidity, ventilation, and other conditions affecting topping performance.
   a. Concrete floor "F" rating recommended at least 30 / 25, where possible.
   b. Concrete must be cured a minimum of 45 days or as directed by the manufacturer before application of Retro Plate can begin.
   c. Application of Retro-Plate shall take place 10 days prior to installation of equipment and substantial completion, thus providing a complete, uninhibited concrete slab for application.

B. Close areas to traffic during floor application and after application, for time period recommended in writing by manufacturer.

PART 2 - PRODUCTS

2.1 MATERIALS AND MANUFACTURERS

A. Hardening/Sealing Agent, Products: Subject to compliance with requirements, available products that may be incorporated into the Work include, but are not limited to, the following:

1. Retro-Plate 99, manufactured by Advanced Floor Products, Inc., P.O. Box 50533, Provo, Utah 84605, 801-812-3420.
   a. Performance Criteria:
      1) Abrasion Resistance: ASTM C779 – Up to 400% increase in abrasion resistance.
      2) Impact Strength: ASTM C805 – Up to 21% increase impact strength.
      3) Ultra Violet Light and Water Spray: ASTM G23-81 – No adverse effect to ultra violet and water spray.
      4) Reflectivity: Up to 30% increase in reflectivity.

## 2.2 RELATED MATERIALS

A. Neutralizing Agent:
   1. Tri-Sodium Phosphate.

B. Water:
   1. Potable.

# PART 3 - EXECUTION

## 3.1 SURFACE CONDITIONS

A. Examine substrate, with installer present, for conditions affecting performance of finish. Correct conditions detrimental to timely and proper work. Do not proceed until unsatisfactory conditions are corrected.

B. Verify that base slab meet finish and surface profile requirements in Division 3 Section "Cast-In-Place Concrete," and Project Conditions above.

C. Prior to application, verify that floor surfaces are free of construction latents.

## 3.2 APPLICATION

A. Start any of the floor finish applications in presence of manufacturer's technical representative.

B. Sealing, Hardening and Polishing of Concrete Surface
   1. Concrete must be in place a minimum of 45 days or as directed by the manufacturer before application can begin.
   2. Application is to take place at least 10 days prior to racking and other in-store accessory installation, thus providing a complete, uninhibited concrete slab for application.
   3. Only a certified applicator shall apply Retro-Plate 99. Applicable procedures must be followed as recommended by the product manufacturer and as required to match approved test sample.
   4. Achieve waterproofing, hardening, dust-proofing, and abrasion resistance of the surface without changing the natural appearance of the concrete, except for the sheen.
   5. Polish to minimum 800 grit and an acceptable sheen as determined by providing and reviewing a 12" X 12" sample with the Government Representative.

## 3.3 WORKMANSHIP AND CLEANING

A. The premises shall be kept clean and free of debris at all times.

B. Remove spatter from adjoining surfaces, as necessary.

C. Repair damages to surface caused by cleaning operations.

D. Remove debris from jobsite.
   1. Dispose of materials in separate, closed containers in accordance with local regulations.

3.4 PROTECTION

A. Protect finished work until fully cured in accordance with manufacturer's recommendations.

**END OF SECTION 033510**

**SECTION 042000 - UNIT MASONRY**

PART 1 - GENERAL

1.1 RELATED DOCUMENTS

A. Drawings and general provisions of the Contract, including General and Supplementary Conditions and Division 01 Specification Sections, apply to this Section.

1.2 SUMMARY

A. This Section includes unit masonry assemblies consisting of the following:

1. Concrete masonry units (CMUs).
2. Architectural Masonry Units.
3. Mortar and grout.
4. Masonry joint reinforcement.
5. Embedded flashing.
6. Miscellaneous masonry accessories.
7. Cavity-wall insulation.

B. Related Sections include the following:

1. Division 07 Section "Sheet Metal Flashing and Trim" for exposed sheet metal flashing.
2. Division 07 Section "Joint Sealants" for sealing control and expansion joints in unit masonry.

C. Products installed, but not furnished, under this Section include the following:

1. Cast-stone trim, furnished under Division 04 Section "Cast Stone Masonry."
2. Miscellaneous loose steel angles used as lintels.

1.3 SUBMITTALS

A. Product Data: For each type of product indicated.

B. Shop Drawings: For the following:

1. Masonry Units: Show sizes, profiles, coursing, and locations of special shapes.

C. Samples for Verification: For each type and color of the following:

1. Exposed concrete masonry units.
2. Face brick, in the form of straps of five or more bricks.
3. Special brick shapes.
4. Pigmented mortar. Make Samples using same sand and mortar ingredients to be used on Project. Label Samples to indicate types and amounts of pigments used.
5. Accessories embedded in masonry.

D. Mix Designs: For each type of mortar and grout. Include description of type and proportions of ingredients.

1. Include test reports, per ASTM C 780, for mortar mixes required to comply with property specification.
2. Include test reports, per ASTM C 1019, for grout mixes required to comply with compressive strength requirement.

E. Cold-Weather Procedures: Detailed description of methods, materials, and equipment to be used to comply with cold-weather requirements.

1.4 QUALITY ASSURANCE

A. Testing Agency Qualifications: An independent agency qualified according to ASTM C 1093 for testing indicated, as documented according to ASTM E 548.

B. Source Limitations for Masonry Units: Obtain exposed masonry units of a uniform texture and color, or a uniform blend within the ranges accepted for these characteristics, through one source from a single manufacturer for each product required.

C. Source Limitations for Mortar Materials: Obtain mortar ingredients of a uniform quality, including color for exposed masonry, from a single manufacturer for each cementitious component and from one source or producer for each aggregate.

D. Fire-Resistance Ratings: Where indicated, provide materials and construction identical to those of assemblies with fire-resistance ratings determined per ASTM E 119 by a testing and inspecting agency, by equivalent concrete masonry thickness, or by other means, as acceptable to authorities having jurisdiction.

E. Mockups: Build mockups to verify selections made under sample submittals and to demonstrate aesthetic effects and set quality standards for materials and execution.

1. Build mockup of typical wall area as shown on Drawings.
2. Build mockups for each type of exposed unit masonry construction, typical exterior and interior walls in sizes approximately 48 inches long by 48 inches high by full thickness, including face and backup wythes and accessories.

    a. Include a sealant-filled joint at least 16 inches long in each mockup.
    b. Include lower corner of window opening at upper corner of exterior wall mockup. Make opening approximately 12 inches wide by 16 inches high.
    c. Include through-wall flashing installed for a 24-inch length in corner of exterior wall mockup approximately 16 inches down from top of mockup, with a 12-inch length of flashing left exposed to view (omit masonry above half of flashing).
    d. Include metal / wood studs, sheathing, veneer anchors, flashing, and weep holes in exterior masonry-veneer wall mockup where applicable.

3. Where masonry is to match existing, erect mockups adjacent and parallel to existing surface.
4. Clean one-half of exposed faces of mockups with masonry cleaner as indicated.
5. Protect accepted mockups from the elements with weather-resistant membrane.
6. Approval of mockups is for color, texture, and blending of masonry units; relationship of mortar and sealant colors to masonry unit colors; tooling of joints; and aesthetic qualities of workmanship.

a. Approval of mockups is also for other material and construction qualities specifically approved by Architect in writing.
b. Approval of mockups does not constitute approval of deviations from the Contract Documents contained in mockups unless such deviations are specifically approved by Architect in writing.

7. Approved mockups may become part of the completed Work if undisturbed at time of Substantial Completion.

1.5 DELIVERY, STORAGE, AND HANDLING

A. Store masonry units on elevated platforms in a dry location. If units are not stored in an enclosed location, cover tops and sides of stacks with waterproof sheeting, securely tied. If units become wet, do not install until they are dry.

B. Store cementitious materials on elevated platforms, under cover, and in a dry location. Do not use cementitious materials that have become damp.

C. Store aggregates where grading and other required characteristics can be maintained and contamination avoided.

D. Deliver preblended, dry mortar mix in moisture-resistant containers designed for lifting and emptying into dispensing silo. Store preblended, dry mortar mix in delivery containers on elevated platforms, under cover, and in a dry location or in a metal dispensing silo with weatherproof cover.

E. Store masonry accessories, including metal items, to prevent corrosion and accumulation of dirt and oil.

1.6 PROJECT CONDITIONS

A. Protection of Masonry: During construction, cover tops of walls, projections, and sills with waterproof sheeting at end of each day's work. Cover partially completed masonry when construction is not in progress.

1. Extend cover a minimum of 24 inches down both sides and hold cover securely in place.
2. Where 1 wythe of multiwythe masonry walls is completed in advance of other wythes, secure cover a minimum of 24 inches down face next to unconstructed wythe and hold cover in place.

B. Do not apply uniform floor or roof loads for at least 24 hours and concentrated loads for at least 3 days after building masonry walls or columns.

C. Stain Prevention: Prevent grout, mortar, and soil from staining the face of masonry to be left exposed or painted. Immediately remove grout, mortar, and soil that come in contact with such masonry.

1. Protect base of walls from rain-splashed mud and from mortar splatter by spreading coverings on ground and over wall surface.
2. Protect sills, ledges, and projections from mortar droppings.
3. Protect surfaces of window and door frames, as well as similar products with painted and integral finishes, from mortar droppings.
4. Turn scaffold boards near the wall on edge at the end of each day to prevent rain from splashing mortar and dirt onto completed masonry.

D. Cold-Weather Requirements: Do not use frozen materials or materials mixed or coated with ice or frost. Do not build on frozen substrates. Remove and replace unit masonry damaged by frost or by freezing

conditions. Comply with cold-weather construction requirements contained in ACI 530.1/ASCE 6/TMS 602.

1. Cold-Weather Cleaning: Use liquid cleaning methods only when air temperature is 40 deg F and above and will remain so until masonry has dried, but not less than 7 days after completing cleaning.

E. Hot-Weather Requirements: Comply with hot-weather construction requirements contained in ACI 530.1/ASCE 6/TMS 602.

PART 2 - PRODUCTS

2.1 MANUFACTURERS

A. In other Part 2 articles where titles below introduce lists, the following requirements apply to product selection:

1. Products: Subject to compliance with requirements, available products that may be incorporated into the Work include, but are not limited to, the following

2.2 MASONRY UNITS, GENERAL

A. Defective Units: Referenced masonry unit standards may allow a certain percentage of units to exceed tolerances and to contain chips, cracks, or other defects exceeding limits stated in the standard. Do not uses units where such defects, including dimensions that vary from specified dimensions by more than stated tolerances, will be exposed in the completed Work or will impair the quality of completed masonry.

2.3 CONCRETE MASONRY UNITS (CMUs)

A. Shapes: Provide shapes indicated and as follows:

1. Provide special shapes for lintels, corners, jambs, sashes, movement joints, headers, bonding, and other special conditions.
2. Provide square-edged units for outside corners, unless otherwise indicated.

B. Concrete Masonry Units: ASTM C 90.

1. Weight Classification: Normal weight, unless otherwise indicated.
2. Size (Width): Manufactured to dimensions 3/8 inch less than nominal dimensions.
3. Exposed Faces: Standard Finish as indicated.
4. Faces to Receive Plaster: Where units are indicated to receive a direct application of plaster, provide textured-face units made with gap-graded aggregates.

C. Split Faced Concrete Masonry Units: ASTM C 90.

1. Weight Classification: Normal weight, unless otherwise indicated.
2. Size (Width): Manufactured to dimensions 3/8 inch less than nominal dimensions as indicated.
3. Exposed Faces: “Split-Faced”.
   a. CMU #1, “Watkins Concrete Block, Putty”.
   b. CMU #2, “Watkins Concrete Block, Wheat”.

D. Architectural Masonry Units:

1. “Trenwyth, Prairie Stone”.
2. Size: 4” X 16” X 16” as indicated.
3. Exposed Face: “Ground Face”.

2.4 MORTAR AND GROUT MATERIALS

A. Portland Cement: ASTM C 150, Type I or II, except Type III may be used for cold-weather construction. Provide natural color or white cement as required to produce mortar color indicated.

B. Hydrated Lime: ASTM C 207, Type S.

C. Portland Cement-Lime Mix: Packaged blend of portland cement complying with ASTM C 150, Type I or Type III, and hydrated lime complying with ASTM C 207, Type S.

D. Masonry Cement: ASTM C 91.

1. Products:

a. Holcim (US) Inc.; Mortamix Masonry Cement, Rainbow Mortamix Masonry Cement, White Mortamix Masonry Cement.
b. National Cement Company, Inc.; Coosa Masonry Cement.

E. Mortar Pigments: Natural and synthetic iron oxides and chromium oxides, compounded for use in mortar mixes. Use only pigments with a record of satisfactory performance in masonry mortar.

1. Products:

a. Bayer Corporation, Industrial Chemicals Div.; Bayferrox Iron Oxide Pigments.
b. Davis Colors; True Tone Mortar Colors.
c. Solomon Grind-Chem Services, Inc.; SGS Mortar Colors.

F. Colored Cement Product: Packaged blend made from portland cement and lime or masonry cement and mortar pigments, all complying with specified requirements, and containing no other ingredients.

1. Formulate blend as required to produce color indicated or, if not indicated, as selected from manufacturer's standard colors.
2. Pigments shall not exceed 10 percent of portland cement by weight.
3. Pigments shall not exceed 5 percent of masonry cement by weight.
4. Products:

a. Colored Portland Cement-Lime Mix:

1) Holcim (US) Inc.; Rainbow Mortamix Custom Color Cement/Lime.
2) Lafarge North America Inc.; Eaglebond.

b. Colored Masonry Cement:

1) Holcim (US) Inc.; Rainbow Mortamix Custom Color Masonry Cement.
2) Lehigh Cement Company; Lehigh Custom Color Masonry Cement.
3) National Cement Company, Inc.; Coosa Masonry Cement.

G. Aggregate for Mortar: ASTM C 144.

1. For mortar that is exposed to view, use washed aggregate consisting of natural sand or crushed stone.

H. Aggregate for Grout: ASTM C 404.

I. Cold-Weather Admixture: Nonchloride, noncorrosive, accelerating admixture complying with ASTM C 494/C 494M, Type C, and recommended by manufacturer for use in masonry mortar of composition indicated.

1. Products:

a. Grace Construction Products, a unit of W. R. Grace & Co. - Conn.; Morset.
b. Sonneborn, Div. of ChemRex; Trimix-NCA.

J. Water: Potable.

## 2.5 REINFORCEMENT

A. Masonry Joint Reinforcement, General: ASTM A 951.

1. Interior Walls: Hot-dip galvanized, carbon steel.
2. Exterior Walls: Hot-dip galvanized, carbon steel.
3. Wire Size for Side Rods: W2.8 or 0.188-inch diameter.
4. Wire Size for Cross Rods: W2.8 or 0.188-inch diameter.
5. Wire Size for Veneer Ties: W2.8 or 0.188-inch diameter.
6. Spacing of Cross Rods, Tabs, and Cross Ties: Not more than 16 inches o.c.
7. Provide in lengths of not less than 10 feet, with prefabricated corner and tee units.

B. Masonry Joint Reinforcement for Single-Wythe Masonry: Either ladder or truss type with single pair of side rods.

C. Masonry Joint Reinforcement for Multiwythe Masonry:

1. Adjustable (two-piece) type, either ladder or truss design, with one side rod at each face shell of backing wythe and with separate ties that extend into facing wythe. Ties have two hooks that engage eyes or slots in reinforcement and resist movement perpendicular to wall. Ties extend at least halfway through facing wythe but with at least 5/8-inch (16-mm) cover on outside face. Ties have hooks or clips to engage a continuous horizontal wire in the facing wythe.

## 2.6 EMBEDDED FLASHING MATERIALS

A. Flexible Flashing: For flashing not exposed to the exterior, use one of the following, unless otherwise indicated:

1. Rubberized-Asphalt Flashing: Composite flashing product consisting of a pliable, adhesive rubberized-asphalt compound, bonded to a high-density, cross-laminated polyethylene film to produce an overall thickness of not less than 0.040 inch.

a. Products:

1) Grace Construction Products, a unit of W. R. Grace & Co. - Conn.; Perm-A-Barrier Wall Flashing.
2) Heckmann Building Products Inc.; No. 82 Rubberized-Asphalt Thru-Wall Flashing.
3) Hohmann & Barnard, Inc.; Textroflash.

2. EPDM Flashing: Sheet flashing product made from ethylene-propylene-diene terpolymer, complying with ASTM D 4637, 0.040 inch thick.

a. Products:

1) Firestone Building Products; FlashGuard.
2) Heckmann Building Products Inc.; No. 81 EPDM Thru-Wall Flashing.

B. Adhesives, Primers, and Seam Tapes for Flashings: Flashing manufacturer's standard products or products recommended by flashing manufacturer for bonding flashing sheets to each other and to substrates.

## 2.7 MISCELLANEOUS MASONRY ACCESSORIES

A. Compressible Filler: Premolded filler strips complying with ASTM D 1056, Grade 2A1; compressible up to 35 percent; of width and thickness indicated; formulated from neoprene or similar material.

B. Bond-Breaker Strips: Asphalt-saturated, organic roofing felt complying with ASTM D 226, Type I (No. 15 asphalt felt).

C. Weep/Vent Products: Use the following, unless otherwise indicated:

1. Wicking Material: Absorbent rope, made from cotton or UV-resistant synthetic fiber, 1/4 to 3/8 inch in diameter, in length required to produce 2-inch exposure on exterior and 18 inches in cavity between wythes. Use only for weeps. Exterior to be cut flush with face of brick after wash down has been completed.

D. Cavity Drainage Material: Free-draining mesh, made from polymer strands that will not degrade within the wall cavity.

1. Provide one of the following configurations:

a. Strips, full-depth of cavity and 10 inches wide, with dovetail shaped notches 7 inches deep that prevent mesh from being clogged with mortar droppings.

2. Products:

a. Mortar Net USA, Ltd.; Mortar Net.

## 2.8 CAVITY-WALL INSULATION

A. Extruded-Polystyrene Board Insulation: ASTM C 578, Type X, closed-cell product extruded with an integral skin.

B. Adhesive: Type recommended by insulation board manufacturer for application indicated.

## 2.9 MASONRY CLEANERS

A. Proprietary Acidic Cleaner: Manufacturer's standard-strength cleaner designed for removing mortar/grout stains, efflorescence, and other new construction stains from new masonry without discoloring or damaging masonry surfaces. Use product expressly approved for intended use by cleaner manufacturer and manufacturer of masonry units being cleaned.

## 2.10 MORTAR AND GROUT MIXES

A. General: Do not use admixtures, including pigments, air-entraining agents, accelerators, retarders, water-repellent agents, antifreeze compounds, or other admixtures, unless otherwise indicated.

1. Do not use calcium chloride in mortar or grout.
2. Limit cementitious materials in mortar to portland cement and lime.
3. Limit cementitious materials in mortar for exterior masonry to portland cement and lime.
4. Add cold-weather admixture (if used) at same rate for all mortar that will be exposed to view, regardless of weather conditions, to ensure that mortar color is consistent.

B. Preblended, Dry Mortar Mix: Furnish dry mortar ingredients in form of a preblended mix. Measure quantities by weight to ensure accurate proportions, and thoroughly blend ingredients before delivering to Project site.

C. Mortar for Unit Masonry: Comply with ASTM C 270, Property Specification. Provide the following types of mortar for applications stated unless another type is indicated or needed to provide required compressive strength of masonry.

1. For masonry below grade or in contact with earth, use Type S.
2. For mortar parge coats, use Type S.
3. For exterior, above-grade, load-bearing and non-load-bearing walls and parapet walls; for interior load-bearing walls; for interior non-load-bearing partitions; and for other applications where another type is not indicated, use TypeS.
4. For interior non-load-bearing partitions, Type N .

D. Pigmented Mortar: Use colored cement product or select and proportion pigments with other ingredients to produce color required. Do not add pigments to colored cement products.

1. Pigments shall not exceed 10 percent of portland cement by weight.
2. Pigments shall not exceed 5 percent of masonry cement by weight.
3. Color to be selected by the Architect from the manufacturers full range of colors..

E. Grout for Unit Masonry: Comply with ASTM C 476.

1. Use grout of type indicated or, if not otherwise indicated, of type (fine or coarse) that will comply with Table 1.15.1 in ACI 530.1/ASCE 6/TMS 602 for dimensions of grout spaces and pour height.
2. Provide grout with a slump of 8 to 11 inches as measured according to ASTM C 143/C 143M.

# PART 3 - EXECUTION

## 3.1 EXAMINATION

A. Examine conditions, with Installer present, for compliance with requirements for installation tolerances and other conditions affecting performance of work.

1. For the record, prepare written report, endorsed by Installer, listing conditions detrimental to performance of work.
2. Verify that foundations are within tolerances specified.

B. Before installation, examine rough-in and built-in construction for piping systems to verify actual locations of piping connections.

C. Proceed with installation only after unsatisfactory conditions have been corrected.

3.2 INSTALLATION, GENERAL

A. Thickness: Build cavity and composite walls and other masonry construction to full thickness shown. Build single-wythe walls to actual widths of masonry units, using units of widths indicated.

B. Build chases and recesses to accommodate items specified in this and other Sections.

C. Leave openings for equipment to be installed before completing masonry. After installing equipment, complete masonry to match the construction immediately adjacent to opening.

D. Use full-size units without cutting if possible. If cutting is required to provide a continuous pattern or to fit adjoining construction, cut units with motor-driven saws; provide clean, sharp, unchipped edges. Allow units to dry before laying unless wetting of units is specified. Install cut units with cut surfaces and, where possible, cut edges concealed.

E. Select and arrange units for exposed unit masonry to produce a uniform blend of colors and textures.

1. Mix units from several pallets or cubes as they are placed.

F. Matching Existing Masonry: Match coursing, bonding, color, and texture of existing masonry.

G. Comply with construction tolerances in ACI 530.1/ASCE 6/TMS 602 and with the following:

1. For conspicuous vertical lines, such as external corners, door jambs, reveals, and expansion and control joints, do not vary from plumb by more than 1/8 inch in 10 feet, 1/4 inch in 20 feet, or 1/2 inch maximum.
2. For vertical alignment of exposed head joints, do not vary from plumb by more than 1/4 inch in 10 feet, or 1/2 inch maximum.
3. For conspicuous horizontal lines, such as lintels, sills, parapets, and reveals, do not vary from level by more than 1/8 inch in 10 feet, 1/4 inch in 20 feet, or 1/2 inch maximum.
4. For exposed bed joints, do not vary from thickness indicated by more than plus or minus 1/8 inch, with a maximum thickness limited to 1/2 inch. Do not vary from bed-joint thickness of adjacent courses by more than 1/8 inch.
5. For exposed head joints, do not vary from thickness indicated by more than plus or minus 1/8 inch. Do not vary from adjacent bed-joint and head-joint thicknesses by more than 1/8 inch.
6. For faces of adjacent exposed masonry units, do not vary from flush alignment by more than 1/16 inch except due to warpage of masonry units within tolerances specified for warpage of units.
7. For exposed bed joints and head joints of stacked bond, do not vary from a straight line by more than 1/16 inch from one masonry unit to the next.

## 3.3 LAYING MASONRY WALLS

A. Lay out walls in advance for accurate spacing of surface bond patterns with uniform joint thicknesses and for accurate location of openings, movement-type joints, returns, and offsets. Avoid using less-than-half-size units, particularly at corners, jambs, and, where possible, at other locations.

B. Bond Pattern for Exposed Masonry: Unless otherwise indicated, lay exposed masonry in running bond and as indicated on Drawings; do not use units with less than nominal 4-inch (100-mm) horizontal face dimensions at corners or jambs.

C. Bond and interlock each course of each wythe at corners. Do not use units with less than nominal 4-inch (100-mm) horizontal face dimensions at corners or jambs.

D. Stopping and Resuming Work: Stop work by racking back units in each course from those in course below; do not tooth. When resuming work, clean masonry surfaces that are to receive mortar, remove loose masonry units and mortar, and wet brick if required before laying fresh masonry.

E. Built-in Work: As construction progresses, build in items specified in this and other Sections. Fill in solidly with masonry around built-in items.

F. Fill space between steel frames and masonry solidly with mortar, unless otherwise indicated.

G. Where built-in items are to be embedded in cores of hollow masonry units, place a layer of metal lath, wire mesh, or plastic mesh in the joint below and rod mortar or grout into core.

H. Fill cores in hollow concrete masonry units with grout 24 inches nder bearing plates, beams, lintels, posts, and similar items, unless otherwise indicated (see structural).

I. Build non-load-bearing interior partitions full height of story to underside of solid floor or roof structure above, unless otherwise indicated.

1. Install compressible filler in joint between top of partition and underside of structure above.
2. Fasten partition top anchors to structure above and build into top of partition. Grout cells of CMUs solidly around plastic tubes of anchors and push tubes down into grout to provide 1/2-inch clearance between end of anchor rod and end of tube. Space anchors 48 inches o.c., unless otherwise indicated.
3. Wedge non-load-bearing partitions against structure above with small pieces of tile, slate, or metal. Fill joint with mortar after dead-load deflection of structure above approaches final position.
4. At fire-rated partitions, treat joint between top of partition and underside of structure above to comply with Division 07 Section "Fire-Resistive Joint Systems."

## 3.4 MORTAR BEDDING AND JOINTING

A. Lay hollow concrete masonry units as follows:

1. With face shells fully bedded in mortar and with head joints of depth equal to bed joints.
2. With webs fully bedded in mortar in all courses of piers, columns, and pilasters.
3. With webs fully bedded in mortar in grouted masonry, including starting course on footings.
4. With entire units, including areas under cells, fully bedded in mortar at starting course on footings where cells are not grouted.

B. Lay solid masonry units with completely filled bed and head joints; butter ends with sufficient mortar to fill head joints and shove into place. Do not deeply furrow bed joints or slush head joints.

C. Set cast-stone trim units in full bed of mortar with full vertical joints. Fill dowel, anchor, and similar holes.

1. Clean soiled surfaces with fiber brush and soap powder and rinse thoroughly with clear water.
2. Allow cleaned surfaces to dry before setting.
3. Wet joint surfaces thoroughly before applying mortar.

D. Tool exposed joints slightly concave when thumbprint hard, using a jointer larger than joint thickness, unless otherwise indicated.

E. Where indicated rake joints back to received caulk ( ie, parapet caps, stone supported by dissimilar materials, etc.).

F. Cut joints flush for masonry walls to receive plaster or other direct-applied finishes (other than paint), unless otherwise indicated.

## 3.5 CAVITY WALLS

A. Bond wythes of cavity walls together using the following method:

1. Masonry Joint Reinforcement: Installed in horizontal mortar joints.

a. Where one wythe is of clay masonry and the other of concrete masonry, use adjustable (two-piece) type reinforcement with continuous horizontal wire in facing wythe attached to ties to allow for differential movement regardless of whether bed joints align.

B. Keep cavities clean of mortar droppings and other materials during construction. Bevel beds away from cavity, to minimize mortar protrusions into cavity. Do not attempt to trowel or remove mortar fins protruding into cavity.

C. Installing Cavity-Wall Insulation: Place small dabs of adhesive, spaced approximately 12 inches o.c. both ways, on inside face of insulation boards, or attach with plastic fasteners designed for this purpose. Fit courses of insulation between wall ties and other confining obstructions in cavity, with edges butted tightly both ways. Press units firmly against inside wythe of masonry or other construction as shown.

1. Fill cracks and open gaps in insulation with crack sealer compatible with insulation and masonry.

## 3.6 MASONRY JOINT REINFORCEMENT

A. General: Install entire length of longitudinal side rods in mortar with a minimum cover of 5/8 inch on exterior side of walls, 1/2 inch elsewhere. Lap reinforcement a minimum of 6 inches.

1. Space reinforcement not more than 16 inches o.c.
2. Provide reinforcement not more than 8 inches (203 mm) above and below wall openings and extending 12 inches (305 mm) beyond openings.

a. Reinforcement above is in addition to continuous reinforcement.

B. Interrupt joint reinforcement at control and expansion joints, unless otherwise indicated (see structural).

C. Provide continuity at wall intersections by using prefabricated T-shaped units.

D. Cut and bend reinforcing units as directed by manufacturer for continuity at corners, returns, offsets, column fireproofing, pipe enclosures, and other special conditions.

3.7 CONTROL AND EXPANSION JOINTS

A. General: Install control and expansion joint materials in unit masonry as masonry progresses. Do not allow materials to span control and expansion joints without provision to allow for in-plane wall or partition movement.

B. Form control joints in concrete masonry as follows:

1. Fit bond-breaker strips into hollow contour in ends of concrete masonry units on one side of control joint. Fill resultant core with grout and rake out joints in exposed faces for application of sealant.

C. Provide horizontal, pressure-relieving joints by either leaving an air space or inserting a compressible filler of width required for installing sealant and backer rod .

1. Locate horizontal, pressure-relieving joints (where applicable) beneath shelf angles (see structural) supporting masonry.

3.8 FLASHING, WEEP HOLES, CAVITY DRAINAGE, AND VENTS

A. General: Install embedded flashing and weep holes in masonry at shelf angles, lintels, ledges, other obstructions to downward flow of water in wall, and where indicated.

B. Install flashing as follows, unless otherwise indicated:

1. Prepare masonry surfaces so they are smooth and free from projections that could puncture flashing. Where flashing is within mortar joint, place through-wall flashing on sloping bed of mortar and cover with mortar. Before covering with mortar, seal penetrations in flashing with adhesive, sealant, or tape as recommended by flashing manufacturer.
2. At multiwythe masonry walls, including cavity walls, extend flashing through outer wythe, turned up a minimum of 8 inches, and through inner wythe to within 1/2 inch (13 mm) of the interior face of wall in exposed masonry.
3. At lintels and shelf angles, extend flashing a minimum of 6 inches into masonry at each end. At heads and sills, extend flashing 6 inches at ends and turn up not less than 2 inches to form end dams.
4. Cut flexible flashing off flush with face of wall after masonry wall construction is completed.

C. Install reglets and nailers for flashing and other related construction where they are shown to be built into masonry.

D. Install weep holes in head joints in exterior wythes of first course of masonry immediately above embedded flashing and as follows:

1. Use specified weep/vent products to form weep holes.
2. Use wicking material to form weep holes above flashing under brick sills. Turn wicking down at lip of sill to be as inconspicuous as possible.
3. Space weep holes formed from 24 inches o.c.
4. Cover cavity side of weep holes with plastic insect screening at cavities insulated with loose-fill insulation.
5. Trim wicking material flush with outside face of wall after mortar has set.

E. Place cavity drainage material in cavities to comply with configuration requirements for cavity drainage material in Part 2 "Miscellaneous Masonry Accessories" Article.

3.9 FIELD QUALITY CONTROL

A. Inspectors: Contractor will engage qualified independent inspectors to perform inspections and prepare reports. Allow inspectors access to scaffolding and work areas, as needed to perform inspections.

B. PREPAIRING, POINTING, AND CLEANING

C. Remove and replace masonry units that are loose, chipped, broken, stained, or otherwise damaged or that do not match adjoining units. Install new units to match adjoining units; install in fresh mortar, pointed to eliminate evidence of replacement.

D. Pointing: During the tooling of joints, enlarge voids and holes, except weep holes, and completely fill with mortar. Point up joints, including corners, openings, and adjacent construction, to provide a neat, uniform appearance. Prepare joints for sealant application, where indicated.

E. In-Progress Cleaning: Clean unit masonry as work progresses by dry brushing to remove mortar fins and smears before tooling joints.

F. Final Cleaning: After mortar is thoroughly set and cured, clean exposed masonry as follows:

1. Remove large mortar particles by hand with wooden paddles and nonmetallic scrape hoes or chisels.
2. Test cleaning methods on sample wall panel; leave one-half of panel uncleaned for comparison purposes. Obtain Architect's approval of sample cleaning before proceeding with cleaning of masonry.
3. Protect adjacent stone and nonmasonry surfaces from contact with cleaner by covering them with liquid strippable masking agent or polyethylene film and waterproof masking tape.
4. Wet wall surfaces with water before applying cleaners; remove cleaners promptly by rinsing surfaces thoroughly with clear water.
5. Clean brick by bucket-and-brush hand-cleaning method described in BIA Technical Notes 20.
6. Clean concrete masonry by cleaning method indicated in NCMA TEK 8-2A applicable to type of stain on exposed surfaces.

3.10 MASONRY WASTE DISPOSAL

A. Salvageable Materials: Unless otherwise indicated, excess masonry materials are Contractor's property. At completion of unit masonry work, remove from Project site.

B. Waste Disposal as Fill Material: Dispose of all masonry waste, including excess or soil-contaminated sand, waste mortar, and broken masonry units, by legally disposing of off Owner's property.

**END OF SECTION 042000**

**SECTION 047200 - CAST STONE MASONRY**

PART 1 - GENERAL

1.1 RELATED DOCUMENTS

A. Drawings and general provisions of the Contract, including General and Supplementary Conditions and Division 01 Specification Sections, apply to this Section.

1.2 SUMMARY

A. Section Includes:

1. Cast stone including the following:

a. Window sills.
b. Wall caps.

B. Related Sections:

1. Division 04 Section "Unit Masonry" for installing cast stone units in unit masonry.

1.3 SUBMITTALS

A. Product Data: For each type of product indicated.

1. For cast stone units, include construction details, material descriptions, dimensions of individual components and profiles, and finishes.

B. Shop Drawings: Show fabrication and installation details for cast stone units. Include dimensions, details of reinforcement and anchorages if any, and indication of finished faces.

1. Include building elevations showing layout of units and locations of joints and anchors.

C. Samples for Initial Selection: For colored mortar.

D. Samples for Verification:

1. For each color and texture of cast stone required, 10 inches square in size.

E. Qualification Data: For manufacturer.

1. Include copies of material test reports for completed projects, indicating compliance of cast stone with ASTM C 1364.

F. Material Test Reports: For each mix required to produce cast stone, based on testing according to ASTM C 1364, including test for resistance to freezing and thawing.

1. Provide test reports based on testing within previous two years.

1.4 QUALITY ASSURANCE

A. Manufacturer Qualifications: A qualified manufacturer of cast stone units similar to those indicated for this Project, that has sufficient production capacity to manufacture required units.

B. Testing Agency Qualifications: Qualified according to ASTM E 329 for testing indicated.

C. Source Limitations for Cast Stone: Obtain cast stone units through single source from single manufacturer.

D. Mockups: Furnish cast stone for installation in mockups specified in Division 04 Section "Unit Masonry."

1.5 DELIVERY, STORAGE, AND HANDLING

A. Coordinate delivery of cast stone with unit masonry work to avoid delaying the Work and to minimize the need for on-site storage.

B. Pack, handle, and ship cast stone units in suitable packs or pallets.

1. Lift with wide-belt slings; do not use wire rope or ropes that might cause staining. Move cast stone units, if required, using dollies with wood supports.
2. Store cast stone units on wood skids or pallets with nonstaining, waterproof covers, securely tied. Arrange to distribute weight evenly and to prevent damage to units. Ventilate under covers to prevent condensation.

C. Store cementitious materials on elevated platforms, under cover, and in a dry location. Do not use cementitious materials that have become damp.

D. Store mortar aggregates where grading and other required characteristics can be maintained and contamination can be avoided.

1.6 PROJECT CONDITIONS

A. Cold-Weather Requirements: Do not use frozen materials or materials mixed or coated with ice or frost. Do not build on frozen substrates. Comply with cold-weather construction requirements in ACI 530.1/ASCE 6/TMS 602.

1. Cold-Weather Cleaning: Use liquid cleaning methods only when air temperature is 40 deg F and above and will remain so until cast stone has dried, but no fewer than seven days after completing cleaning.

B. Hot-Weather Requirements: Comply with hot-weather construction requirements in ACI 530.1/ASCE 6/TMS 602.

PART 2 - PRODUCTS

2.1 CAST STONE MATERIALS

A. General: Comply with ASTM C 1364 and the following:

B. Portland Cement: ASTM C 150, Type I or Type III, containing not more than 0.60 percent total alkali when tested according to ASTM C 114. Provide natural color or white cement as required to produce cast stone color indicated.

C. Coarse Aggregates: Granite, quartz, or limestone complying with ASTM C 33; gradation and colors as needed to produce required cast stone textures and colors.

D. Fine Aggregates: Natural sand or crushed stone complying with ASTM C 33, gradation and colors as needed to produce required cast stone textures and colors.

E. Color Pigment: ASTM C 979, synthetic mineral-oxide pigments or colored water-reducing admixtures; color stable, free of carbon black, nonfading, and resistant to lime and other alkalis.

F. Admixtures: Use only admixtures specified or approved in writing by Architect.

1. Do not use admixtures that contain more than 0.1 percent water-soluble chloride ions by mass of cementitious materials. Do not use admixtures containing calcium chloride.
2. Use only admixtures that are certified by manufacturer to be compatible with cement and other admixtures used.
3. Air-Entraining Admixture: ASTM C 260. Add to mixes for units exposed to the exterior at manufacturer's prescribed rate to result in an air content of 4 to 6 percent, except do not add to zero-slump concrete mixes.
4. Water-Reducing Admixture: ASTM C 494/C 494M, Type A.
5. Water-Reducing, Retarding Admixture: ASTM C 494/C 494M, Type D.
6. Water-Reducing, Accelerating Admixture: ASTM C 494/C 494M, Type E.

G. Reinforcement: Deformed steel bars complying with ASTM A 615/A 615M, Grade 60. Use galvanized or epoxy-coated reinforcement when covered with less than 1-1/2 inches of cast stone material.

1. Epoxy Coating: ASTM A 775/A 775M.
2. Galvanized Coating: ASTM A 767/A 767M.

H. Embedded Anchors and Other Inserts: Fabricated from steel complying with ASTM A 36, and hot-dip galvanized to comply with ASTM A 123.

## 2.2 CAST STONE UNITS

A. Manufacturers: Subject to compliance with requirements, available manufacturers offering products that may be incorporated into the Work include, but are not limited to, the following:

1. Lumberman’s Cast Stone.
2. Stonco Cast Stone Incorporated..
3.

B. Provide cast stone units complying with ASTM C 1364 using either the vibrant dry tamp or wet-cast method.

1. Provide units that are resistant to freezing and thawing as determined by laboratory testing according to ASTM C 666/C 666M, Procedure A, as modified by ASTM C 1364.

C. Fabricate units with sharp arris and accurately reproduced details, with indicated texture on all exposed surfaces unless otherwise indicated.

1. Slope exposed horizontal surfaces 1:12 to drain unless otherwise indicated.

2. Provide raised fillets at backs of sills and at ends indicated to be built into jambs.
3. Provide drips on projecting elements unless otherwise indicated.

D. Fabrication Tolerances:

1. Variation in Cross Section: Do not vary from indicated dimensions by more than 1/8 inch.
2. Variation in Length: Do not vary from indicated dimensions by more than 1/360 of the length of unit or 1/8 inch, whichever is greater, but in no case by more than 1/4 inch.
3. Warp, Bow, and Twist: Not to exceed 1/360 of the length of unit or 1/8 inch, whichever is greater.
4. Location of Grooves, False Joints, Holes, Anchorages, and Similar Features: Do not vary from indicated position by more than 1/8 inch on formed surfaces of units and 3/8 inch on unformed surfaces.

E. Cure units as follows:

1. Cure units in enclosed moist curing room at 95 to 100 percent relative humidity and temperature of 100 deg F for 12 hours or 70 deg F for 16 hours.
2. Keep units damp and continue curing to comply with one of the following:

a. No fewer than five days at mean daily temperature of 70 deg F or above.
b. No fewer than six days at mean daily temperature of 60 deg F or above.
c. No fewer than seven days at mean daily temperature of 50 deg F or above.
d. No fewer than eight days at mean daily temperature of 45 deg F or above.

F. Acid etch units after curing to remove cement film from surfaces to be exposed to view.

G. Color and Texture: Provide units with fine-grained texture and buff color resembling “Continental Cast Stone #1103”.

## 2.3 MORTAR MATERIALS

A. Provide mortar materials that comply with Division 04 Section "Unit Masonry."

## 2.4 ACCESSORIES

A. Anchors: Type and size indicated, fabricated from steel complying with ASTM A 36, and hot-dip galvanized to comply with ASTM A 123.

B. Dowels: 1/2-inch- diameter, round bars, fabricated from steel complying with ASTM A 36, and hot-dip galvanized to comply with ASTM A 123.

C. Proprietary Acidic Cleaner: Manufacturer's standard-strength cleaner designed for removing mortar/grout stains, efflorescence, and other new construction stains from new masonry without discoloring or damaging masonry surfaces. Use product expressly approved for intended use by cast stone manufacturer and expressly approved by cleaner manufacturer for use on cast stone and adjacent masonry materials.

1. Manufacturers: Subject to compliance with requirements, available manufacturers offering products that may be incorporated into the Work include, but are not limited to, the following:

a. Diedrich Technologies, Inc.
b. EaCo Chem, Inc.
c. ProSoCo, Inc.

2.5 MORTAR MIXES

A. Comply with requirements in Division 04 Section "Unit Masonry" for mortar mixes.

2.6 SOURCE QUALITY CONTROL

A. Engage a qualified independent testing agency to sample and test cast stone units according to ASTM C 1364.

1. Include one test for resistance to freezing and thawing.

PART 3 - EXECUTION

3.1 EXAMINATION

A. Examine substrates and conditions, with Installer present, for compliance with requirements for installation tolerances and other conditions affecting performance of work.

B. Proceed with installation only after unsatisfactory conditions have been corrected.

3.2 SETTING CAST STONE IN MORTAR

A. Install cast stone units to comply with requirements in Division 04 Section "Unit Masonry."

B. Set cast stone as indicated on Drawings. Set units accurately in locations indicated with edges and faces aligned according to established relationships and indicated tolerances.

1. Install anchors, supports, fasteners, and other attachments indicated or necessary to secure units in place.
2. Coordinate installation of cast stone with installation of flashing specified in other Sections.

C. Wet joint surfaces thoroughly before applying mortar or setting in mortar.

D. Set units in full bed of mortar with full head joints unless otherwise indicated.

1. Set units with joints 1/4 to 3/8 inch wide unless otherwise indicated.
2. Build anchors and ties into mortar joints as units are set.
3. Fill dowel holes and anchor slots with mortar.
4. Fill collar joints solid as units are set.
5. Build concealed flashing into mortar joints as units are set.
6. Keep head joints in coping and other units with exposed horizontal surfaces open to receive sealant.
7. Keep joints at shelf angles open to receive sealant.

E. Rake out joints for pointing with mortar to depths of not less than 3/4 inch. Rake joints to uniform depths with square bottoms and clean sides. Scrub faces of units to remove excess mortar as joints are raked.

F. Point mortar joints by placing and compacting mortar in layers not greater than 3/8 inch. Compact each layer thoroughly and allow it to become thumbprint hard before applying next layer.

G. Tool exposed joints slightly concave when thumbprint hard, using a jointer larger than joint thickness unless otherwise indicated.

H. Provide sealant joints at copings and other horizontal surfaces, at expansion, control, and pressure-relieving joints, and at locations indicated.

1. Keep joints free of mortar and other rigid materials.
2. Build in compressible foam-plastic joint fillers where indicated.
3. Form joint of width indicated, but not less than 3/8 inch.
4. Prime cast stone surfaces to receive sealant and install compressible backer rod in joints before applying sealant unless otherwise indicated.
5. Prepare and apply sealant of type and at locations indicated to comply with applicable requirements in Division 07 Section "Joint Sealants."

## 3.3 SETTING ANCHORED CAST STONE WITH SEALANT-FILLED JOINTS

A. Set cast stone as indicated on Drawings. Set units accurately in locations indicated with edges and faces aligned according to established relationships and indicated tolerances.

1. Install anchors, supports, fasteners, and other attachments indicated or necessary to secure units in place.
2. Shim and adjust anchors, supports, and accessories to set cast stone in locations indicated with uniform joints.

B. Keep cavities open where unfilled space is indicated between back of cast stone units and backup wall; do not fill cavities with mortar or grout.

C. Fill anchor holes with sealant.

1. Where dowel holes occur at pressure-relieving joints, provide compressible material at ends of dowels.

D. Set cast stone supported on clip or continuous angles on resilient setting shims. Use material of thickness required to maintain uniform joint widths. Hold shims back from face of cast stone a distance at least equal to width of joint.

E. Keep joints free of mortar and other rigid materials. Remove temporary shims and spacers from joints after anchors and supports are secured in place and cast stone units are anchored. Do not begin sealant installation until temporary shims and spacers are removed.

1. Form open joint of width indicated, but not less than 3/8 inch .

F. Prime cast stone surfaces to receive sealant and install compressible backer rod in joints before applying sealant unless otherwise indicated.

G. Prepare and apply sealant of type and at locations indicated to comply with applicable requirements in Division 07 Section "Joint Sealants."

## 3.4 INSTALLATION TOLERANCES

A. Variation from Plumb: Do not exceed 1/8 inch in 10 feet, 1/4 inch in 20 feet, or 1/2 inch maximum.

B. Variation from Level: Do not exceed 1/8 inch in 10 feet, 1/4 inch in 20 feet, or 1/2 inch maximum.

C. Variation in Joint Width: Do not vary joint thickness more than 1/8 inch in 36 inches or one-fourth of nominal joint width, whichever is less.

D. Variation in Plane between Adjacent Surfaces (Lipping): Do not vary from flush alignment with adjacent units or adjacent surfaces indicated to be flush with units by more than 1/16 inch, except where variation is due to warpage of units within tolerances specified.

3.5 ADJUSTING AND CLEANING

A. Remove and replace stained and otherwise damaged units and units not matching approved Samples. Cast stone may be repaired if methods and results are approved by Architect.

B. Replace units in a manner that results in cast stone matching approved Samples, complying with other requirements, and showing no evidence of replacement.

C. In-Progress Cleaning: Clean cast stone as work progresses.

1. Remove mortar fins and smears before tooling joints.
2. Remove excess sealant immediately, including spills, smears, and spatter.

D. Final Cleaning: After mortar is thoroughly set and cured, clean exposed cast stone as follows:

1. Remove large mortar particles by hand with wooden paddles and nonmetallic scrape hoes or chisels.
2. Test cleaning methods on sample; leave one sample uncleaned for comparison purposes. Obtain Architect's approval of sample cleaning before proceeding with cleaning of cast stone.
3. Protect adjacent surfaces from contact with cleaner by covering them with liquid strippable masking agent or polyethylene film and waterproof masking tape.
4. Wet surfaces with water before applying cleaners; remove cleaners promptly by rinsing thoroughly with clear water.
5. Clean cast stone by bucket-and-brush hand-cleaning method described in BIA Technical Notes 20.
6. Clean cast stone with proprietary acidic cleaner applied according to manufacturer's written instructions.

**END OF SECTION 047200**

# SECTION 055000 - METAL FABRICATIONS

## PART 1 - GENERAL

### 1.1 RELATED DOCUMENTS

A. Drawings and general provisions of the Contract, including General and Supplementary Conditions and Division 01 Specification Sections, apply to this Section.

### 1.2 SUMMARY

A. Section Includes:

1. Metal bollards.

B. Products furnished, but not installed, under this Section:

1. Loose steel lintels.

C. Related Sections:

1. Division 03 Section "Cast-in-Place Concrete" for installing items cast into concrete.
2. Division 04 Section "Unit Masonry" for installing loose lintels, anchor bolts, and other items built into unit masonry.

### 1.3 PERFORMANCE REQUIREMENTS

A. Thermal Movements: Allow for thermal movements from ambient and surface temperature changes acting on exterior metal fabrications by preventing buckling, opening of joints, overstressing of components, failure of connections, and other detrimental effects.

1. Temperature Change: 120 deg F, ambient; 180 deg F, material surfaces.

### 1.4 SUBMITTALS

A. Shop Drawings: Show fabrication and installation details for metal fabrications.

1. Include plans, elevations, sections, and details of metal fabrications and their connections. Show anchorage and accessory items.

### 1.5 PROJECT CONDITIONS

A. Field Measurements: Verify actual locations of walls and other construction contiguous with metal fabrications by field measurements before fabrication.

1.6 COORDINATION

A. Coordinate selection of shop primers with topcoats to be applied over them. Comply with paint and coating manufacturers' written recommendations to ensure that shop primers and topcoats are compatible with one another.

PART 2 - PRODUCTS

2.1 METALS, GENERAL

A. Metal Surfaces, General: Provide materials with smooth, flat surfaces unless otherwise indicated. For metal fabrications exposed to view in the completed Work, provide materials without seam marks, roller marks, rolled trade names, or blemishes.

2.2 FERROUS METALS

A. Steel Plates, Shapes, and Bars: ASTM A 36/A 36M.

B. Steel Tubing: ASTM A 500, cold-formed steel tubing.

C. Steel Pipe: ASTM A 53/A 53M, standard weight (Schedule 40) unless otherwise indicated.

2.3 MISCELLANEOUS MATERIALS

A. Epoxy Zinc-Rich Primer: Complying with MPI#20 and compatible with topcoat.

B. Galvanizing Repair Paint: High-zinc-dust-content paint complying with SSPC-Paint 20 and compatible with paints specified to be used over it.

C. Concrete: Comply with requirements in Division 03 Section "Cast-in-Place Concrete" for normal-weight, air-entrained, concrete with a minimum 28-day compressive strength of 3000 psi .

2.4 FABRICATION, GENERAL

A. Shop Assembly: Preassemble items in the shop to greatest extent possible. Disassemble units only as necessary for shipping and handling limitations. Use connections that maintain structural value of joined pieces. Clearly mark units for reassembly and coordinated installation.

B. Cut, drill, and punch metals cleanly and accurately. Remove burrs and ease edges to a radius of approximately 1/32 inch unless otherwise indicated. Remove sharp or rough areas on exposed surfaces.

C. Form bent-metal corners to smallest radius possible without causing grain separation or otherwise impairing work.

D. Form exposed work with accurate angles and surfaces and straight edges.

E. Form exposed connections with hairline joints, flush and smooth, using concealed fasteners or welds where possible. Where exposed fasteners are required, use Phillips flat-head (countersunk) fasteners unless otherwise indicated. Locate joints where least conspicuous.

F. Fabricate seams and other connections that will be exposed to weather in a manner to exclude water. Provide weep holes where water may accumulate.

G. Cut, reinforce, drill, and tap metal fabrications as indicated to receive finish hardware, screws, and similar items.

H. Provide for anchorage of type indicated; coordinate with supporting structure. Space anchoring devices to secure metal fabrications rigidly in place and to support indicated loads.

2.5 METAL BOLLARDS

A. Fabricate metal bollards from **Schedule 40 steel pipe as indicated**.

1. Where bollards are indicated to receive controls for door operators, provide necessary cutouts for controls and holes for wire.
2. Where bollards are indicated to receive light fixtures, provide necessary cutouts for fixtures and holes for wire.

B. Galvanize bollards located in exterior walls.

2.6 LOOSE STEEL LINTELS

A. Fabricate loose steel lintels from steel angles and shapes of size indicated for openings and recesses in masonry walls and partitions at locations indicated. Fabricate in single lengths for each opening unless otherwise indicated. Weld adjoining members together to form a single unit where indicated.

B. Size loose lintels to provide bearing length at each side of openings equal to 1/12 of clear span but not less than 8 inches (200 mm) unless otherwise indicated.

C. Galvanize loose steel lintels located in exterior walls.

2.7 STEEL AND IRON FINISHES

A. Galvanizing: Hot-dip galvanize items as indicated to comply with ASTM A 153/A 153M for steel and iron hardware and with ASTM A 123/A 123M for other steel and iron products.

1. Do not quench or apply post galvanizing treatments that might interfere with paint adhesion.

B. Shop prime iron and steel items **not indicated to be galvanized** unless they are to be embedded in concrete, sprayed-on fireproofing, or masonry, or unless otherwise indicated.

PART 3 - EXECUTION

3.1 INSTALLATION, GENERAL

A. Cutting, Fitting, and Placement: Perform cutting, drilling, and fitting required for installing metal fabrications. Set metal fabrications accurately in location, alignment, and elevation; with edges and surfaces level, plumb, true, and free of rack; and measured from established lines and levels.

B. Fit exposed connections accurately together to form hairline joints. Weld connections that are not to be left as exposed joints but cannot be shop welded because of shipping size limitations. Do not weld, cut, or abrade surfaces of exterior units that have been hot-dip galvanized after fabrication and are for bolted or screwed field connections.

C. Fastening to In-Place Construction: Provide anchorage devices and fasteners where metal fabrications are required to be fastened to in-place construction. Provide threaded fasteners for use with concrete and masonry inserts, toggle bolts, through bolts, lag screws, wood screws, and other connectors.

D. Provide temporary bracing or anchors in formwork for items that are to be built into concrete, masonry, or similar construction.

E. Corrosion Protection: Coat concealed surfaces of aluminum that will come into contact with grout, concrete, masonry, wood, or dissimilar metals with the following:

## 3.2 INSTALLING METAL BOLLARDS

A. Fill metal-capped bollards solidly with concrete and allow concrete to cure seven days before installing.

1. Do not fill removable bollards with concrete.

B. Anchor bollards in concrete **in formed or core-drilled holes not less than 36 inches deep and 4 inch larger than OD of bollard**.

C. Fill bollards solidly with concrete, mounding top surface to shed water.

1. Do not fill removable bollards with concrete.

## 3.3 ADJUSTING AND CLEANING

A. Touchup Painting: Immediately after erection, clean field welds, bolted connections, and abraded areas. Paint uncoated and abraded areas with the same material as used for shop painting to comply with SSPC-PA 1 for touching up shop-painted surfaces.

1. Apply by brush or spray to provide a minimum 2.0-mil dry film thickness.

B. Touchup Painting: Cleaning and touchup painting of field welds, bolted connections, and abraded areas of shop paint are specified in Division 09 painting Sections.

C. Galvanized Surfaces: Clean field welds, bolted connections, and abraded areas and repair galvanizing to comply with ASTM A 780.

**END OF SECTION 055000**

**SECTION 061000 - ROUGH CARPENTRY**

PART 1 - GENERAL

1.1 RELATED DOCUMENTS

A. Drawings and general provisions of the Contract, including General and Supplementary Conditions and Division 01 Specification Sections, apply to this Section.

1.2 SUMMARY

A. This Section includes the following:

1. Wood blocking, cants, sleepers and nailers.
2. Plywood backing panels.
3. Building wrap.

B. Related Sections include the following:

1. Division 06 Section "Sheathing."
2. Division 06 Section “Interior Architectural Woodwork”.

1.3 DEFINITIONS

A. Dimension Lumber: Lumber of 2 inches nominal or greater but less than 5 inches nominal in least dimension.

B. Lumber grading agencies, and the abbreviations used to reference them, include the following:

1. NLGA: National Lumber Grades Authority.

1.4 SUBMITTALS

A. Product Data: For each type of process and factory-fabricated product. Indicate component materials and dimensions and include construction and application details.

1. Include data for wood-preservative treatment from chemical treatment manufacturer and certification by treating plant that treated materials comply with requirements. Indicate type of preservative used and net amount of preservative retained.
2. Include data for fire-retardant treatment from chemical treatment manufacturer and certification by treating plant that treated materials comply with requirements. Include physical properties of treated materials based on testing by a qualified independent testing agency.
3. For products receiving a waterborne treatment, include statement that moisture content of treated materials was reduced to levels specified before shipment to Project site.
4. Include copies of warranties from chemical treatment manufacturers for each type of treatment.

1.5 DELIVERY, STORAGE, AND HANDLING

A. Stack lumber flat with spacers between each bundle to provide air circulation. Provide for air circulation around stacks and under coverings.

PART 2 - PRODUCTS

2.1 Available Manufacturers: Subject to compliance with requirements, manufacturers offering products that may be incorporated into the Work include, but are not limited to, the following:

A. Building Wrap:
   1. Tenneco Building Products
   2. Celotex Corporation (The); Building Products Division.

2.2 WOOD PRODUCTS, GENERAL

A. Lumber: DOC PS 20 and applicable rules of grading agencies indicated. If no grading agency is indicated, provide lumber that complies with the applicable rules of any rules-writing agency certified by the ALSC Board of Review. Provide lumber graded by an agency certified by the ALSC Board of Review to inspect and grade lumber under the rules indicated.

   1. Factory mark each piece of lumber with grade stamp of grading agency.
   2. For exposed lumber indicated to receive a stained or natural finish, mark grade stamp on end or back of each piece or omit grade stamp and provide certificates of grade compliance issued by grading agency.
   3. Where nominal sizes are indicated, provide actual sizes required by DOC PS 20 for moisture content specified. Where actual sizes are indicated, they are minimum dressed sizes for dry lumber.
   4. Provide dressed lumber, S4S, unless otherwise indicated.

2.3 WOOD-PRESERVATIVE-TREATED LUMBER

A. Preservative Treatment by Pressure Process: AWPA C2, except that lumber that is not in contact with the ground and is continuously protected from liquid water may be treated according to AWPA C31 with inorganic boron (SBX).

   1. Preservative Chemicals: Acceptable to authorities having jurisdiction and containing no arsenic or chromium.

B. Kiln-dry lumber after treatment to a maximum moisture content of 19 percent. Do not use material that is warped or does not comply with requirements for untreated material.

C. Mark lumber with treatment quality mark of an inspection agency approved by the ALSC Board of Review.

D. Application: Treat all rough carpentry, unless otherwise indicated.

## 2.4 FIRE-RETARDANT-TREATED MATERIALS

A. General: Comply with performance requirements in AWPA C20 (lumber) and AWPA C27 (plywood).

1. Use Exterior type for exterior locations and where indicated.
2. Use Interior Type A, unless otherwise indicated.

B. Identify fire-retardant-treated wood with appropriate classification marking of testing and inspecting agency acceptable to authorities having jurisdiction.

C. Application: Treat all rough carpentry, unless otherwise indicated.

1. Framing for raised platforms.
2. Concealed blocking.
3. Plywood backing panels.

## 2.5 MISCELLANEOUS LUMBER

A. General: Provide miscellaneous lumber indicated and lumber for support or attachment of other construction, including the following:

1. Blocking.
2. Nailers.
3. Sleepers
4. Cants.

B. For items of dimension lumber size, provide Construction or No. 2 grade lumber with 19 percent maximum moisture content and any of the following species:

1. Spruce-pine-fir; NLGA.

C. For blocking not used for attachment of other construction, Utility, Stud, or No. 3 grade lumber of any species may be used provided that it is cut and selected to eliminate defects that will interfere with its attachment and purpose.

D. For blocking and nailers used for attachment of other construction, select and cut lumber to eliminate knots and other defects that will interfere with attachment of other work.

## 2.6 PLYWOOD BACKING PANELS

A. Telephone and Electrical Equipment Backing Panels: DOC PS 1, Interior or Exterior AC, fire-retardant treated, in thickness indicated or, if not indicated, not less than 3/4-inch nominal thickness.

## 2.7 FASTENERS

A. General: Provide fasteners of size and type indicated that comply with requirements specified in this Article for material and manufacture.

1. Where rough carpentry is exposed to weather, in ground contact, pressure-preservative treated, or in area of high relative humidity, provide fasteners with hot-dip zinc coating complying with ASTM A 153.

B. Power-Driven Fasteners: NES NER-272.

C. Wood Screws: ASME B18.6.1.

D. Expansion Anchors: Anchor bolt and sleeve assembly of material indicated below with capability to sustain, without failure, a load equal to 6 times the load imposed when installed in unit masonry assemblies and equal to 4 times the load imposed when installed in concrete as determined by testing per ASTM E 488 conducted by a qualified independent testing and inspecting agency.

1. Material: Stainless steel with bolts and nuts complying with ASTM F 593 and ASTM F 594, Alloy Group 1 or 2.

PART 3 - EXECUTION

3.1 INSTALLATION, GENERAL

A. Set rough carpentry to required levels and lines, with members plumb, true to line, cut, and fitted. Fit rough carpentry to other construction; scribe and cope as needed for accurate fit. Locate nailers, blocking, and similar supports to comply with requirements for attaching other construction.

B. Framing Standard: Comply with AF&PA's "Details for Conventional Wood Frame Construction," unless otherwise indicated.

C. Do not splice structural members between supports, unless otherwise indicated.

D. Provide blocking and framing as indicated and as required to support facing materials, fixtures, specialty items, and trim.

1. Provide metal clips for fastening gypsum board or lath at corners and intersections where framing or blocking does not provide a surface for fastening edges of panels. Space clips not more than 16 inches o.c.

E. Provide blocking and framing at all door stop locations.

F. Provide fire blocking in furred spaces, stud spaces, and other concealed cavities as indicated and as follows:

1. Fire block concealed spaces of wood-framed walls and partitions at each floor level, at ceiling line of top story, and at not more than 96 inches o.c. Where fire blocking is not inherent in framing system used, provide closely fitted solid wood blocks of same width as framing members and 2-inch nominal thickness.
2. Fire block concealed spaces behind combustible cornices and exterior trim at not more than 20 feet o.c.

G. Sort and select lumber so that natural characteristics will not interfere with installation or with fastening other materials to lumber. Do not use materials with defects that interfere with function of member or pieces that are too small to use with minimum number of joints or optimum joint arrangement.

H. Comply with AWPA M4 for applying field treatment to cut surfaces of preservative-treated lumber.

1. Use inorganic boron for items that are continuously protected from liquid water.
2. Use copper naphthenate for items not continuously protected from liquid water.

I. Securely attach rough carpentry work to substrate by anchoring and fastening as indicated, complying with the following:

1. Table 2304.9.1, "Fastening Schedule," in ICC's International Building Code.
2. Table 2305.2, "Fastening Schedule," in BOCA's BOCA National Building Code.
3. Table 2306.1, "Fastening Schedule," in SBCCI's Standard Building Code.

J. Use common wire nails, unless otherwise indicated. Select fasteners of size that will not fully penetrate members where opposite side will be exposed to view or will receive finish materials. Make tight connections between members. Install fasteners without splitting wood; do not countersink nail heads, unless otherwise indicated.

3.2 WOOD BLOCKING, AND NAILER INSTALLATION

A. Install where indicated and where required for screeding or attaching other work. Form to shapes indicated and cut as required for true line and level of attached work. Coordinate locations with other work involved.

B. Attach items to substrates to support applied loading. Recess bolts and nuts flush with surfaces, unless otherwise indicated.

3.3 PROTECTION

A. Protect wood that has been treated with inorganic boron (SBX) from weather. If, despite protection, inorganic boron-treated wood becomes wet, apply EPA-registered borate treatment. Apply borate solution by spraying to comply with EPA-registered label.

B. Protect rough carpentry from weather. If, despite protection, rough carpentry becomes wet, apply EPA-registered borate treatment. Apply borate solution by spraying to comply with EPA-registered label.

**END OF SECTION 061000**

# SECTION 061600 - SHEATHING

## PART 1 - GENERAL

### 1.1 RELATED DOCUMENTS

A. Drawings and general provisions of the Contract, including General and Supplementary Conditions and Division 01 Specification Sections, apply to this Section.

### 1.2 SUMMARY

A. This Section includes the following:

1. Roof sheathing.
2. Flexible flashing at openings in sheathing.

B. Related Sections include the following:

1. Division 06 Section "**Rough Carpentry**" for plywood backing panels.

### 1.3 SUBMITTALS

A. Product Data: For each type of process and factory-fabricated product. Indicate component materials and dimensions and include construction and application details.

### 1.4 QUALITY ASSURANCE

A. Fire-Test-Response Characteristics: For assemblies with fire-resistance ratings, provide materials and construction identical to those of assemblies tested for fire resistance per ASTM E 119 by a testing and inspecting agency acceptable to authorities having jurisdiction.

1. Fire-Resistance Ratings: Indicated by design designations from **UL's "Fire Resistance Directory."**

### 1.5 DELIVERY, STORAGE, AND HANDLING

A. Stack plywood and other panels flat with spacers between each bundle to provide air circulation. Provide for air circulation around stacks and under coverings.

## PART 2 - PRODUCTS

### 2.1 WOOD PANEL PRODUCTS, GENERAL

A. Oriented Strand Board: DOC PS 2.

B. Thickness: As needed to comply with requirements specified, but not less than thickness indicated.

C. Factory mark panels to indicate compliance with applicable standard.

## 2.2 ROOF SHEATHING

A. Oriented-Strand-Board Roof Sheathing: **Exposure 1, Structural I** sheathing.

1. Span Rating: Not less than **32/16**.
2. Nominal Thickness: Not less than 5/8 inch.

## 2.3 FASTENERS

A. General: Provide fasteners of size and type indicated that comply with requirements specified in this Article for material and manufacture.

1. For roof sheathing, provide fasteners **with hot-dip zinc coating complying with ASTM A 153**.

B. Nails, Brads, and Staples: ASTM F 1667.

C. Power-Driven Fasteners: NES NER-272.

D. Wood Screws: ASME B18.6.1.

E. Screws for Fastening Wood Structural Panels to Cold-Formed Metal Framing: ASTM C 954, except with wafer heads and reamer wings, length as recommended by screw manufacturer for material being fastened.

1. For wall and roof sheathing panels, provide screws with organic-polymer or other corrosion-protective coating having a salt-spray resistance of more than 800 hours according to ASTM B 117.

## 2.4 MISCELLANEOUS MATERIALS

A. Adhesives for Field Gluing Panels to Framing: Formulation complying with **APA AFG-01** that is approved for use with type of construction panel indicated by manufacturers of both adhesives and panels.

B. Flexible Flashing: Composite, self-adhesive, flashing product consisting of a pliable, rubberized-asphalt compound, bonded to a high-density, cross-laminated polyethylene film to produce an overall thickness of not less than **0.030 inch**.

1. Available Products: Subject to compliance with requirements, products that may be incorporated into the Work include, but are not limited to, the following:

a. Grace Construction Products, a unit of W. R. Grace & Co. - Conn.;
b. Polyguard Products, Inc.; Polyguard 300.

C. Primer for Flexible Flashing: Product recommended by manufacturer of flexible flashing for substrate.

PART 3 - EXECUTION

3.1 INSTALLATION, GENERAL

A. Do not use materials with defects that impair quality of sheathing or pieces that are too small to use with minimum number of joints or optimum joint arrangement.

B. Cut panels at penetrations, edges, and other obstructions of work; fit tightly against abutting construction, unless otherwise indicated.

C. Securely attach to substrate by fastening as indicated, complying with the following:

1. NES NER-272 for power-driven fasteners.
2. Table 2304.9.1, "Fastening Schedule," in ICC's "International Building Code."
3. Table 23-II-B-1, "Nailing Schedule," and Table 23-II-B-2, "Wood Structural Panel Roof Sheathing Nailing Schedule," in ICBO's "Uniform Building Code."
4. Table 2305.2, "Fastening Schedule," in BOCA's "BOCA National Building Code."
5. Table 2306.1, "Fastening Schedule," in SBCCI's "Standard Building Code."
6. Table R602.3(1), "Fastener Schedule for Structural Members," and Table R602.3(2), "Alternate Attachments," in ICC's "International Residential Code for One- and Two-Family Dwellings."
7. Table 602.3(1), "Fastener Schedule for Structural Members," and Table 602.3(2), "Alternate Attachments," in ICC's "International One- and Two-Family Dwelling Code."

D. Use common wire nails, unless otherwise indicated. Select fasteners of size that will not fully penetrate members where opposite side will be exposed to view or will receive finish materials. Make tight connections. Install fasteners without splitting wood.

E. Coordinate **roof** sheathing installation with flashing and joint-sealant installation so these materials are installed in sequence and manner that prevent exterior moisture from passing through completed assembly.

F. Do not bridge building expansion joints; cut and space edges of panels to match spacing of structural support elements.

G. Coordinate sheathing installation with installation of materials installed over sheathing so sheathing is not exposed to precipitation or left exposed at end of the workday when rain is forecast.

3.2 WOOD STRUCTURAL PANEL INSTALLATION

A. General: Comply with applicable recommendations in APA Form No. E30S, "Engineered Wood Construction Guide," for types of structural-use panels and applications indicated.

B. Fastening Methods: Fasten panels as indicated below:

1. Wall and Roof Sheathing:

a. **Nail or staple** to wood framing, **Apply a continuous bead of glue to framing members at edges of wall sheathing panels.**
b. Space panels 1/8 inch apart at edges and ends.

3.3 FLEXIBLE FLASHING INSTALLATION

A. Apply flexible flashing where indicated to comply with manufacturers written instructions.

1. Prime substrates as recommended by flashing manufacturer.
2. Lap seams and junctures with other materials at least 4 inches, except that at flashing flanges of other construction, laps need not exceed flange width.
3. After flashing has been applied, roll surfaces with a hard rubber or metal roller to ensure that flashing is completely adhered to substrates.

**END OF SECTION 061600**

# SECTION 061753 - SHOP-FABRICATED WOOD TRUSSES

## PART 1 - GENERAL

### 1.1 SUMMARY

A. This Section includes the following:

1. Wood roof trusses.
2. Wood girder trusses.
3. Wood truss bracing.
4. Metal truss accessories.

### 1.2 PERFORMANCE REQUIREMENTS

A. Structural Performance: Provide metal-plate-connected wood trusses capable of withstanding design loads indicated. Comply with requirements in TPI 1.

### 1.3 SUBMITTALS

A. Product Data: For metal-plate connectors, metal truss accessories, and fasteners.

B. Shop Drawings: Show fabrication and installation details for trusses.

1. Show location, pitch, span, camber, configuration, and spacing for each type of truss required.
2. Indicate sizes, stress grades, and species of lumber.
3. Indicate locations of permanent bracing required to prevent buckling of individual truss members due to design loads.
4. Indicate type, size, material, finish, design values, orientation, and location of metal connector plates.
5. Show splice details and bearing details.
6. For installed products indicated to comply with design loads, include structural analysis data signed and sealed by the qualified professional engineer responsible for their preparation.

C. Qualification Data: For metal-plate manufacturer, professional engineer, and fabricator.

D. Research/Evaluation Reports: For the following, showing compliance with building code in effect for Project:

1. Metal-plate connectors.
2. Metal truss accessories.

### 1.4 QUALITY ASSURANCE

A. Metal Connector-Plate Manufacturer Qualifications: A manufacturer that is a member of TPI and that complies with quality-control procedures in TPI 1 for manufacture of connector plates.

1. Manufacturer's responsibilities include providing professional engineering services needed to assume engineering responsibility.

2. Engineering Responsibility: Preparation of Shop Drawings and comprehensive engineering analysis by a qualified professional engineer.

B. Fabricator Qualifications: Shop that participates in a recognized quality-assurance program that complies with quality-control procedures in TPI 1 and that involves third-party inspection by an independent testing and inspecting agency acceptable to Architect and authorities having jurisdiction.

C. Comply with applicable requirements and recommendations of the following publications:

1. TPI 1, "National Design Standard for Metal Plate Connected Wood Truss Construction."
2. TPI DSB, "Recommended Design Specification for Temporary Bracing of Metal Plate Connected Wood Trusses."
3. TPI HIB, "Commentary and Recommendations for Handling, Installing & Bracing Metal Plate Connected Wood Trusses."

D. Wood Structural Design Standard: Comply with applicable requirements in AF&PA's "National Design Specifications for Wood Construction" and its "Supplement."

E. Forest Certification: Provide metal-plate-connected wood trusses produced from wood obtained from forests certified by an FSC-accredited certification body to comply with FSC STD-01-001, "FSC Principles and Criteria for Forest Stewardship."

## PART 2 - PRODUCTS

### 2.1 DIMENSION LUMBER

A. Lumber: DOC PS 20. Provide lumber that complies with the applicable rules of any rules writing agency certified by the ALSC Board of Review. Provide lumber graded by an agency certified by the ALSC Board of Review to inspect and grade lumber under the rules indicated.

1. Provide dry lumber with 19 percent maximum moisture content at time of dressing.

B. Grade and Species: For truss chord and web members, provide dimension lumber of any species, graded visually or mechanically, and capable of supporting required loads without exceeding allowable design values according to AF&PA's "National Design Specifications for Wood Construction" and its "Supplement."

C. Permanent Bracing: Provide wood bracing that complies with requirements for miscellaneous lumber in Division 06 Section Rough Carpentry.

### 2.2 METAL PRODUCTS

A. Connector Plates: Fabricate connector plates to comply with TPI 1 from hot-dip galvanized steel sheet complying with ASTM A 653/A 653M; Structural Steel (SS), high-strength low-alloy steel Type A (HSLAS Type A), or high-strength low-alloy steel Type B (HSLAS Type B); G60 (Z180) coating designation; and not less than 0.036 inch (0.9 mm) thick.

1. Available Manufacturers: Subject to compliance with requirements, manufacturers offering products that may be incorporated into the Work include, but are not limited to, the following:
2. Manufacturers: Subject to compliance with requirements, provide products by one of the following:

a. Alpine Engineered Products, Inc.
b. Cherokee Metal Products, Inc.; Masengill Machinery Company.
c. CompuTrus, Inc.
d. Eagle Metal Products.
e. Jager Building Systems, Inc.
f. MiTek Industries, Inc.; a subsidiary of Berkshire Hathaway Inc.
g. Robbins Engineering, Inc.
h. TEE-LOK Corporation; a subsidiary of Berkshire Hathaway Inc.
i. Truswal Systems Corporation.

B. Fasteners: Where trusses are exposed to weather, in ground contact, or in area of high relative humidity, provide fasteners with hot-dip zinc coating complying with ASTM A 153/A 153M.

1. Nails, Brads, and Staples: ASTM F 1667.
2. Power-Driven Fasteners: NES NER-272.
3. Wood Screws: ASME B18.6.1.
4. Lag Bolts: ASME B18.2.1 (ASME B18.2.3.8M).
5. Bolts: Steel bolts complying with ASTM A 307, Grade A (ASTM F 568M, Property Class 4.6); with ASTM A 563 (ASTM A 563M) hex nuts and, where indicated, flat washers.

C. Metal Truss Accessories: Provide truss accessories made from hot-dip, zinc-coated steel sheet complying with ASTM A 653/A 653M, G60 (Z180) coating designation.

1. Available Manufacturers: Subject to compliance with requirements, manufacturers offering products that may be incorporated into the Work include, but are not limited to, the following:
2. Manufacturers: Subject to compliance with requirements, provide products by one of the following:
3. Basis-of-Design Products: Subject to compliance with requirements, provide products indicated on Drawings, or comparable products by one of the following:

a. Cleveland Steel Specialty Co.
b. Harlen Metal Products, Inc.
c. KC Metals Products, Inc.
d. Simpson Strong-Tie Co., Inc.
e. Southeastern Metals Manufacturing Co., Inc.
f. USP Structural Connectors.

4. Allowable Design Loads: Provide products with allowable design loads, as published by manufacturer, that meet or exceed those indicated. Manufacturer's published values shall be determined from empirical data or by rational engineering analysis and demonstrated by comprehensive testing performed by a qualified independent testing agency.

## 2.3 FABRICATION

A. Assemble truss members in design configuration indicated; use jigs or other means to ensure uniformity and accuracy of assembly with joints closely fitted to comply with tolerances in TPI 1. Position members to produce design camber indicated.

1. Fabricate wood trusses within manufacturing tolerances in TPI 1.

B. Connect truss members by metal connector plates located and securely embedded simultaneously in both sides of wood members by air or hydraulic press.

PART 3 - EXECUTION

3.1 INSTALLATION

A. Install wood trusses only after supporting construction is in place and is braced and secured.

B. If trusses are delivered to Project site in more than one piece, assemble trusses before installing.

C. Hoist trusses in place by lifting equipment suited to sizes and types of trusses required, exercising care not to damage truss members or joints by out-of-plane bending or other causes.

D. Install and brace trusses according to TPI recommendations and as indicated.

E. Anchor trusses securely at bearing points; use metal truss tie-downs or floor truss hangers as applicable. Install fasteners through each fastener hole in truss accessories according to manufacturer's fastening schedules and written instructions.

F. Securely connect each truss ply required for forming built-up girder trusses.

G. Install and fasten permanent bracing during truss erection and before construction loads are applied. Anchor ends of permanent bracing where terminating at walls or beams.

1. Install bracing to comply with Division 06 Section Rough Carpentry. Retain subparagraph below if floor trusses are required.
2. Install and fasten strongback bracing vertically against vertical web of parallel-chord floor trusses at centers indicated.

H. Install wood trusses within installation tolerances in TPI 1.

I. Do not cut or remove truss members.

J. Replace wood trusses that are damaged or do not meet requirements.

**END OF SECTION 061753**

**SECTION 062013 - EXTERIOR FINISH CARPENTRY**

1.1 GENERAL

1.2 RELATED DOCUMENTS

A. Drawings and general provisions of the Contract, including General and Supplementary Conditions and Division 01 Specification Sections, apply to this Section.

1.3 SUMMARY

A. This Section includes the following:
   1. Hardboard soffits.
   2. Hardborad Fascia.

B. Related Sections include the following:

   1. Division 06 Section "Rough Carpentry" for furring, blocking, and other carpentry work not exposed to view .
   2. Division 06 Section "Structural Trusses".
   3. Division 07 Section "Metal Roofing Panels."
   4. Division 07 Section "Sheet Metal Flashing”.

1.4 SUBMITTALS

A. Product Data: For each type of process and factory-fabricated product. Indicate component materials, dimensions, profiles, textures, and colors and include construction and application details.

B. Samples for Verification:

   1. 12 inch length for each product, with exposed surface finish.

1.5 DELIVERY, STORAGE, AND HANDLING

A. Protect materials against weather and contact with damp or wet surfaces. Stack lumber, plywood, and other panels flat with spacers between each bundle to provide air circulation. Provide for air circulation within and around stacks and under temporary coverings.

1.6 PROJECT CONDITIONS

A. Weather Limitations: Proceed with installation only when existing and forecasted weather conditions permit work to be performed and at least one coat of specified finish can be applied without exposure to rain, snow, or dampness.

   1. For exterior ornamental wood columns, comply with manufacturer's written instructions and warranty requirements.

B. Do not install finish carpentry materials that are wet, moisture damaged, or mold damaged.

1. Indications that materials are wet or moisture damaged include, but are not limited to, discoloration, sagging, or irregular shape.
2. Indications that materials are mold damaged include, but are not limited to, fuzzy or splotchy surface contamination and discoloration.

## PART 2 - PRODUCTS

### 2.1 MATERIALS, GENERAL

A. Hardboard, Available Products: Subject to compliance with requirements, products that may be incorporated into the Work include, but are not limited to, the following.

B. Soffit Panels:
1. Manufacturer: “James Hardie, Hardie Trim”.
2. Type: ¼ inch thick flat panels, smooth with manufacturer's standard exterior primer.
3. Size: As indicated in longest lengths available for practical installation procedures.

C. Fascia Boards:
1. Manufacturer: “James Hardie, Hardie Trim”.
2. Type: 1 inch thick smooth with manufacturer’s standard primer.
3. Size: As indicated in longest lengths available for practical installation procedures.

### 2.2 MISCELLANEOUS MATERIALS

A. Fasteners for Exterior Finish Carpentry: Provide nails or screws, in sufficient length to penetrate not less than 1-1/2 inches into wood substrate.

1. For prefinished items, provide matching prefinished aluminum fasteners where face fastening is required.
2. For applications not otherwise indicated, provide hot-dip galvanized steel fasteners.

B. Wood Glue: Waterproof resorcinol glue recommended by manufacturer for exterior carpentry use.

C. Flashing: Comply with requirements in Division 07 Section "Sheet Metal Flashing and Trim" for flashing materials installed in exterior finish carpentry.

D. Insect Screening for Soffit Vents: Aluminum, 18-by-16 mesh.

E. Continuous Soffit Vents: Aluminum hat channel shape with stamped louvers, 2 inches wide, and in lengths not less than 96 inches.

1. Net Free Area: 6 sq. in./linear ft..
2. Finish: Mill finish.

F. Sealants: Latex, complying with ASTM C 834, Type P, Grade NF and with applicable requirements in Division 07 Section "Joint Sealants," recommended by sealant manufacturer and manufacturer of substrates for intended application.

1. Available Products: Subject to compliance with requirements, products that may be incorporated into the Work include, but are not limited to, the following:

a. Bostik Findley; Chem-Calk 600.
b. Pecora Corporation; AC-20+.
c. Schnee-Morehead, Inc.; SM 8200.
d. Sonneborn, Division of ChemRex Inc.; Sonolac.
e. Tremco; Tremflex 834.

## PART 3 - EXECUTION

### 3.1 EXAMINATION

A. Examine substrates, with Installer present, for compliance with requirements for installation tolerances and other conditions affecting performance.

B. Examine finish carpentry materials before installation. Reject materials that are wet, moisture damaged, and mold damaged.

C. Proceed with installation only after unsatisfactory conditions have been corrected.

### 3.2 PREPARATION

A. Clean substrates of projections and substances detrimental to application.

### 3.3 INSTALLATION, GENERAL

A. Do not use materials that are unsound, warped, improperly treated or finished, inadequately seasoned, or too small to fabricate with proper jointing arrangements.

1. Do not use manufactured units with defective surfaces, sizes, or patterns.

B. Install exterior finish carpentry level, plumb, true, and aligned with adjacent materials. Use concealed shims where necessary for alignment.

1. Scribe and cut exterior finish carpentry to fit adjoining work. Refinish and seal cuts as recommended by manufacturer.
2. Install to tolerance of 1/8 inch in 96 inches for level and plumb. Install adjoining exterior finish carpentry with 1/32-inch maximum offset for flush installation and 1/16-inch maximum offset for reveal installation.
3. Coordinate exterior finish carpentry with materials and systems in or adjacent to it. Provide cutouts for mechanical and electrical items that penetrate exterior finish carpentry.

### 3.4 ADJUSTING

A. Replace exterior finish carpentry that is damaged or does not comply with requirements. Exterior finish carpentry may be repaired or refinished if work complies with requirements and shows no evidence of repair or refinishing. Adjust joinery for uniform appearance.

3.5 CLEANING

A. Clean exterior finish carpentry on exposed and semiexposed surfaces. Touch up factory-applied finishes to restore damaged or soiled areas.

3.6 PROTECTION

A. Protect installed products from damage from weather and other causes during construction.

B. Remove and replace finish carpentry materials that are wet, moisture damaged, and mold damaged.

1. Indications that materials are wet or moisture damaged include, but are not limited to, discoloration, sagging, or irregular shape.
2. Indications that materials are mold damaged include, but are not limited to, fuzzy or splotchy surface contamination and discoloration.

**END OF SECTION 062013**

# SECTION 064023 - INTERIOR ARCHITECTURAL WOODWORK

## PART 1 - GENERAL

### 1.1 RELATED DOCUMENTS

A. Drawings and general provisions of the Contract, including General and Supplementary Conditions and Division 01 Specification Sections, apply to this Section.

### 1.2 SUMMARY

A. This Section includes the following:

1. Plastic-laminate cabinets.
2. Plastic-laminate countertops.
3. Chemical Resistant Plastic-laminate countertops.
4. Shop finishing of interior woodwork.
5. Solid Surface Countertops.

B. Related Sections include the following:

1. Division 06 Section "Rough Carpentry" for wood furring, blocking, shims, and hanging strips required for installing woodwork and concealed within other construction before woodwork installation.

### 1.3 DEFINITIONS

A. Interior architectural woodwork includes wood furring, blocking, shims, and hanging strips for installing woodwork items unless concealed within other construction before woodwork installation.

### 1.4 SUBMITTALS

A. Product Data: For each type of product indicated including cabinet hardware and accessories.

B. Shop Drawings: Show location of each item, dimensioned plans and elevations, large-scale details, attachment devices, and other components.

1. Show locations and sizes of furring, blocking, and hanging strips, including concealed blocking and reinforcement specified in other Sections.
2. Show locations and sizes of cutouts and holes for plumbing fixtures, soap dispensers and other items installed in architectural woodwork.

C. Samples for Verification:

1. Plastic laminates, 8 by 10 inches, for each type, color, pattern, and surface finish.
2. Thermoset decorative-panels, 8 by 10 inches, for each type, color, pattern, and surface finish, with edge banding on 1 edge.
3. Solid-surfacing materials, 6 inches (150 mm) square.

4. Exposed cabinet hardware and accessories, one unit for each type and finish.

1.5 QUALITY ASSURANCE

A. Installer Qualifications: Certified participant in AWI's Quality Certification Program.

B. Source Limitations: Engage a qualified woodworking firm to assume undivided responsibility for production of interior architectural woodwork.

C. Quality Standard: Unless otherwise indicated, comply with AWI's "Architectural Woodwork Quality Standards" for grades of interior architectural woodwork indicated for construction, finishes, installation, and other requirements.

1. Provide AWI Quality Certification Program labels and certificates indicating that woodwork, including installation, complies with requirements of grades specified.

1.6 DELIVERY, STORAGE, AND HANDLING

A. Do not deliver woodwork until painting and similar operations that could damage woodwork have been completed in installation areas. If woodwork must be stored in other than installation areas, store only in areas where environmental conditions comply with requirements specified in "Project Conditions" Article.

1.7 PROJECT CONDITIONS

A. Environmental Limitations: Do not deliver or install woodwork until building is enclosed, wet work is complete, and HVAC system is operating and maintaining temperature and relative humidity at occupancy levels during the remainder of the construction period.

B. Field Measurements: Where woodwork is indicated to fit to other construction, verify dimensions of other construction by field measurements before fabrication, and indicate measurements on Shop Drawings. Coordinate fabrication schedule with construction progress to avoid delaying the Work.

1. Locate concealed framing, blocking, and reinforcements that support woodwork by field measurements before being enclosed, and indicate measurements on Shop Drawings.
2. Established Dimensions: Where field measurements cannot be made without delaying the Work, establish dimensions and proceed with fabricating woodwork without field measurements. Provide allowance for trimming at site, and coordinate construction to ensure that actual dimensions correspond to established dimensions.

1.8 COORDINATION

A. Coordinate sizes and locations of framing, blocking, furring, reinforcements, and other related units of Work specified in other Sections to ensure that interior architectural woodwork can be supported and installed as indicated.

PART 2 - PRODUCTS

2.1 MATERIALS

A. General: Provide materials that comply with requirements of AWI's quality standard for each type of woodwork and quality grade specified, unless otherwise indicated.

B. Wood Products: Comply with the following:
   1. Hardboard: AHA A135.4.
   2. Medium-Density Fiberboard: ANSI A208.2, Grade MD.
   3. Particleboard: ANSI A208.1, Grade M-2-Exterior Glue.
   4. Softwood Plywood: DOC PS 1, Medium Density Overlay.
   5. Veneer-Faced Panel Products (Hardwood Plywood): HPVA HP-1.

C. Thermoset Decorative Panels: Particleboard or medium-density fiberboard finished with thermally fused, melamine-impregnated decorative paper complying with LMA SAT-1.

   1. Provide PVC or polyester edge banding complying with LMA EDG-1 on components with exposed or semiexposed edges.

D. High-Pressure Decorative Laminate: NEMA LD 3, grades as indicated or, if not indicated, as required by woodwork quality standard.

   1. Available Manufacturers: Subject to compliance with requirements, manufacturers offering high-pressure decorative laminates that may be incorporated into the Work include, but are not limited to, the following:

      a. Formica Corporation.
      b. Nevamar Company, LLC; Decorative Products Div.
      c. Wilsonart International; Div. of Premark International, Inc.

E. Solid-Surfacing Material: Homogeneous solid sheets of filled plastic resin complying with ISSFA-2.

F. Basis of design: Formica Solid Surfaces, Night Mist 302, any substitutions to match and be approved by Project Manager.

   1. Available Manufacturers: Subject to compliance with requirements, manufacturers offering products that may be incorporated into the Work include, but are not limited to, the following:

      a. Avonite, Inc.
      b. E. I. du Pont de Nemours and Company.
      c. Formica Corporation.
      d. LG Chemical, Ltd.
      e. Meganite Inc.; a division of the Pyrochem Group.
      f. Nevamar Company, LLC; Decorative Products Div.
      g. Samsung; Cheil Industries Inc.
      h. Swan Corporation (The).
      i. Transolid, Inc.
      j. Wilsonart International; Div. of Premark International, Inc.

## 2.2 CABINET HARDWARE AND ACCESSORIES

A. General: Provide cabinet hardware and accessory materials associated with architectural cabinets, except for items specified in Division 08 Section "Door Hardware (Scheduled by Describing Products)."

B. Frameless Concealed Hinges (European Type): BHMA A156.9, B01602, 135 degrees of opening, self-closing.

C. Wire Pulls: Back mounted, solid metal, 4 inches long, 5/16 inch in diameter.

D. Adjustable Shelf Standards and Supports: BHMA A156.9, B04071; with shelf rests, B04081.

E. Drawer Slides: BHMA A156.9, B05091.
   1. Heavy Duty (Grade 1HD-100 and Grade 1HD-200): Side mounted; full-extension type; zinc-plated steel ball-bearing slides.
   2. Box Drawer Slides: Grade 1HD-100; for drawers not more than 6 inches high and 24 inches wide.
   3. File Drawer Slides: Grade 1HD-200; for drawers more than 6 inches high or 24 inches wide.

F. Door Locks: BHMA A156.11, E07121.

G. Drawer Locks: BHMA A156.11, E07041.

H. Grommets for Cable Passage through Countertops: 2-inch OD, black, molded-plastic grommets and matching plastic caps with slot for wire passage.

I. Exposed Hardware Finishes: For exposed hardware, provide finish that complies with BHMA A156.18 for BHMA finish number indicated.

   1. Satin Stainless Steel: BHMA 630.

J. For concealed hardware, provide manufacturer's standard finish that complies with product class requirements in BHMA A156.9.

## 2.3 MISCELLANEOUS MATERIALS

A. Furring, Blocking, Shims, and Hanging Strips: Softwood or hardwood lumber, kiln dried to less than 15 percent moisture content.

B. Anchors: Select material, type, size, and finish required for each substrate for secure anchorage. Provide nonferrous-metal or hot-dip galvanized anchors and inserts on inside face of exterior walls and elsewhere as required for corrosion resistance. Provide toothed-steel or lead expansion sleeves for drilled-in-place anchors.

C. Adhesive for Bonding Plastic Laminate: Unpigmented contact cement.

   1. Adhesive for Bonding Edges: Hot-melt adhesive or adhesive specified above for faces.

## 2.4 FABRICATION, GENERAL

A. Interior Woodwork Grade: Unless otherwise indicated, provide Custom-grade interior woodwork complying with referenced quality standard.

B. Wood Moisture Content: Comply with requirements of referenced quality standard for wood moisture content in relation to ambient relative humidity during fabrication and in installation areas.

C. Complete fabrication, including assembly, finishing, and hardware application, to maximum extent possible before shipment to Project site. Disassemble components only as necessary for shipment and installation. Where necessary for fitting at site, provide ample allowance for scribing, trimming, and fitting.

   1. Trial fit assemblies at fabrication shop that cannot be shipped completely assembled. Install dowels, screws, bolted connectors, and other fastening devices that can be removed after trial fitting. Verify that various parts fit as intended and check measurements of assemblies against field measurements indicated on Shop Drawings before disassembling for shipment.

D. Shop-cut openings to maximum extent possible to receive hardware, appliances, plumbing fixtures, electrical work, and similar items. Locate openings accurately and use templates or roughing-in diagrams to produce accurately sized and shaped openings. Sand edges of cutouts to remove splinters and burrs.

1. Seal edges of openings in countertops with a coat of varnish.

2.5 PLASTIC-LAMINATE CABINETS

A. AWI Type of Cabinet Construction: Flush overlay unless otherwise indicated.

B. Laminate Cladding for Exposed Surfaces: High-pressure decorative laminate complying with the following requirements:

1. Horizontal Surfaces Other Than Tops: Grade HGS].
2. Vertical Surfaces: Grade HGS.
3. Edges: Grade HGS or PVC T-mold matching laminate in color, pattern, and finish.

C. Materials for Semiexposed Surfaces:

1. Surfaces Other Than Drawer Bodies: Thermoset decorative panels.

2. Drawer Sides and Backs: Solid-hardwood lumber.
3. Drawer Bottoms: Hardwood plywood.

D. Concealed Backs of Panels with Exposed Plastic Laminate Surfaces: High-pressure decorative laminate, Grade BKL.

E. Colors, Patterns, and Finishes: Provide materials and products that result in colors and textures of exposed laminate surfaces complying with the following requirements:

1. Exposed surfaces of cabinets and drawers.

a. Formica, Bisque Ceramic, 7697-58.

F. Provide dust panels of 1/4-inch (6.4-mm) plywood or tempered hardboard above compartments and drawers, unless located directly under tops.

2.6 PLASTIC-LAMINATE COUNTERTOPS

A. High-Pressure Decorative Laminate Grade: HGS.

B. Colors, Patterns, and Finishes: Provide materials and products that result in colors and textures of exposed laminate surfaces complying with the following requirements:

1. Countertops and chemical resistant countertops:

a. Formica, Storm Solidz 3505-CT. Where designated (Surgery Prep and Lab) to be Chemical resistant add “Chemtop”.

C. Grain Direction: Parallel to cabinet fronts.

D. Edge Treatment: Same as laminate cladding on horizontal surfaces.

E. Core Material: Particleboard made with exterior glue or Medium-density fiberboard made with exterior glue.

2.7 SOLID-SURFACING-MATERIAL COUNTERTOPS

A. Basis of design: Formica Solid Surface, Night Mist 302

B. Solid-Surfacing-Material Thickness: As noted on the drawings

C. Fabricate tops in one piece, unless otherwise indicated. Comply with solid-surfacing-material manufacturer's written recommendations for adhesives, sealers, fabrication, and finishing.

1. Fabricate tops with shop-applied edges of materials and configuration indicated.

PART 3 - EXECUTION

3.1 PREPARATION

A. Before installation, condition woodwork to average prevailing humidity conditions in installation areas.

B. Before installing architectural woodwork, examine shop-fabricated work for completion and complete work as required, including removal of packing and backpriming.

3.2 INSTALLATION

A. Grade: Install woodwork to comply with requirements for the same grade specified in Part 2 for fabrication of type of woodwork involved.

B. Assemble woodwork and complete fabrication at Project site to comply with requirements for fabrication in Part 2, to extent that it was not completed in the shop.

C. Install woodwork level, plumb, true, and straight. Shim as required with concealed shims. Install level and plumb (including tops) to a tolerance of 1/8 inch in 96 inches.

D. Scribe and cut woodwork to fit adjoining work, refinish cut surfaces, and repair damaged finish at cuts.

E. Cabinets: Install without distortion so doors and drawers fit openings properly and are accurately aligned. Adjust hardware to center doors and drawers in openings and to provide unencumbered operation. Complete installation of hardware and accessory items as indicated.

1. Install cabinets with no more than 1/8 inch in 96-inch sag, bow, or other variation from a straight line.
2. Fasten wall cabinets through back, near top and bottom, at ends and not more than 16 inches o.c. with No. 10 wafer-head screws with washers sized for 1 ½ -inch penetration into wood framing, blocking, or hanging strips.

F. Countertops: Anchor securely by screwing through corner blocks of base cabinets or other supports into underside of countertop.

1. Install countertops with no more than 1/8 inch in 96-inch sag, bow, or other variation from a straight line.
2. Secure backsplashes to walls with adhesive.
3. Calk space between backsplash and wall with sealant specified in Division 07 Section "Joint Sealants."

3.3 ADJUSTING AND CLEANING

A. Repair damaged and defective woodwork, where possible, to eliminate functional and visual defects; where not possible to repair, replace woodwork. Adjust joinery for uniform appearance.

B. Clean, lubricate, and adjust hardware.

C. Clean woodwork on exposed and semiexposed surfaces. Touch up shop-applied finishes to restore damaged or soiled areas.

**END OF SECTION 064023**

**SECTION 220100 – GENERAL REQUIREMENTS FOR PLUMBING**

PART 1 - GENERAL

1.1 RELATED DOCUMENTS

A. Drawings and general provisions of the Contract, including General and Supplementary Conditions apply to this Section.

B. Division 21, 22 and 23 Conditions apply to this Section.

1.2 SUMMARY

A. This Section includes general mechanical requirements and shall apply to all phases of the work specified, indicated on the drawings or required to provide for complete installation of plumbing systems.

B. Refer to Section 230100 for General Requirements for Mechanical

C. Refer to Section 230500 for Basic Mechanical Materials and Methods

D. Refer to Section 230505 for Basic Piping Materials and Methods

PART 2 - PRODUCTS (Not Applicable)
PART 3 - EXECUTION (Not Applicable)

**END OF SECTION 220100**

**SECTION 220523 – VALVES FOR PLUMBING**

PART 1 - GENERAL

1.1 RELATED DOCUMENTS

A. Drawings and general provisions of the Contract, including General and Supplementary Conditions and Division 1 Specification Sections, apply to this Section.

1.2 SUMMARY

A. This Section includes general duty valves common to several mechanical piping systems. Special purpose valves are specified in Division 22 piping system Sections.

1.3 SUBMITTALS

A. General: Submit each item in this Article according to the Conditions of the Contract and Division 1 Specification Sections.

B. Product Data for each valve type. Include body material, valve design, pressure and temperature classification, end connection details, seating materials, trim material and arrangement, dimensions and required clearances, and installation instructions. Include list indicating valve and its application.

C. Maintenance data for valves to include in the operation and maintenance manual specified in Division 1. Include detailed manufacturer's instructions on adjusting, servicing, disassembling, and repairing.

D. See Submittal Schedule located at the end of Section 220100 – General Mechanical Requirements.

1.4 QUALITY ASSURANCE

A. ASME Compliance: Comply with ASME B31.9 for building services piping and ASME B31.1 for power piping.

PART 2 - PRODUCTS

2.1 MANUFACTURERS

A. Manufacturers: Subject to compliance with requirements, provide products by one of the following:

1. Gate and Globe Valves:

a. Crane Company; Valves and Fitting Division.
b. Hammond Valve Corporation.
c. Kitz Corp. of America.
d. Lunkenheimer/Cincinnati Valve Co.
e. Milwaukee Valve Company, Inc.
f. NIBCO Inc.

g. Powell: Wm. Powell Company (The).
h. Red-White Valve Corp.
i. Stockham Valves & Fittings, Inc.

2. Ball Valves:

a. Conbraco Industries, Inc.; Apollo Division.
b. Hammond Valve Corporation.
c. Milwaukee Valve Company, Inc.
d. NIBCO Inc.
e. Stockham Valves & Fittings, Inc.
f. Tyler Pipe.
g. Victaulic Company of America.

3. Butterfly Valves:

a. Center Line, Mark Controls Corporation.
b. Crane Company; Valves and Fitting Division.
c. General Signal; DeZurik Unit.
d. Grinnell Corp.
e. Hammond Valve Corporation.
f. Keystone Valve USA, Inc.
g. Milwaukee Valve Company, Inc.
h. NIBCO Inc.
i. Red-White Valve Corp.
j. Stockham Valves & Fittings, Inc.
k. Tyler Pipe.
l. Ultraflo Corporation.
m. Victaulic Company of America.

4. Check Valves:

a. Cla-Val Co.
b. Conbraco Industries, Inc.; Apollo Division.
c. Hammond Valve Corporation.
d. Keystone Valve USA, Inc.
e. Kitz Corp. of America.
f. Metraflex Company.
g. Milwaukee Valve Company, Inc.
h. NIBCO Inc.
i. Red-White Valve Corp.
j. Stockham Valves & Fittings, Inc.
k. Tyler Pipe.
l. Val-Matic Valve & Mfg. Corp.
m. Victaulic Company of America.

## 2.2 BASIC, COMMON FEATURES

A. Pressure and Temperature Ratings: As indicated in the "Application Schedule" of Part 3 of this Section and as required to suit system pressures and temperatures.

B. Sizes: Same size as upstream pipe, unless otherwise indicated.

C. Operators: Use specified operators and handwheels, except provide the following special operator features:

1. Handwheels: For valves other than quarter turn.
2. Lever Handles: For quarter-turn valves 6 inches and smaller, except for plug valves, which shall have square heads. Furnish Owner with 1 wrench for every 10 plug valves.
3. Memory Stops: For balancing applications.

D. Extended Stems: Where insulation is indicated or specified, provide extended stems arranged to receive insulation.

E. Threads: ASME B1.20.1.

F. Flanges: ASME B16.1 for cast iron, ASME B16.5 for steel, and ASME B16.24 for bronze valves.

G. Solder Joint: ASME B16.18.

## 2.3 GATE VALVES

A. Gate Valves, 2-1/2 Inches and Smaller: MSS SP-80; Class 125, 200-psi cold working pressure (CWP), or Class 150, 300-psi CWP; ASTM B 62 cast-bronze body and bonnet, solid-bronze wedge, copper-silicon alloy rising stem, teflon-impregnated packing with bronze packing nut, threaded or soldered end connections; and with aluminum or malleable-iron handwheel.

B. Gate Valves, 3 Inches and Larger: MSS SP-70, Class 125, 200-psi CWP, ASTM A 126 cast-iron body and bonnet, solid cast-iron wedge, brass-alloy stem, outside screw and yoke, teflon-impregnated packing with 2-piece packing gland assembly, flanged end connections; and with cast-iron handwheel.

## 2.4 BALL VALVES

A. Ball Valves, 4 Inches and Smaller: MSS SP-110, Class 150, 600-psi CWP, ASTM B 584 bronze body and bonnet, 2-piece construction; chrome-plated brass ball, standard port for 1/2-inch valves and smaller and conventional port for 3/4-inch valves and larger; blowout proof; bronze or brass stem; teflon seats and seals; threaded or soldered end connections, lever handle operator.

## 2.5 GLOBE VALVES

A. Globe Valves, 2-1/2 Inches and Smaller: MSS SP-80; Class 125, 200-psi CWP, or Class 150, 300-psi CWP; ASTM B 62 cast-bronze body and screwed bonnet, rubber, bronze, or teflon disc, silicon bronze-alloy stem, teflon-impregnated packing with bronze nut, threaded or soldered end connections; and with aluminum or malleable-iron handwheel.

B. Globe Valves, 3 Inches and Larger: MSS SP-85, Class 125, 200-psi CWP, ASTM A 126 cast-iron body and bolted bonnet with bronze fittings, renewable bronze seat and disc, brass-alloy stem, outside screw and yoke, teflon-impregnated packing with cast-iron follower, flanged end connections; and with cast-iron handwheel.

## 2.6 BUTTERFLY VALVES

A. Butterfly Valves: MSS SP-67, 200-psi CWP, 150-psi maximum pressure differential, ASTM A 126 cast-iron body and bonnet, extended neck, stainless-steel stem, field-replaceable EPDM or Buna N sleeve and stem seals, wafer, lug, or grooved style, nickel-plated ductile iron, disk per application.

## 2.7 CHECK VALVES

A. Swing Check Valves, 2-1/2 Inches and Smaller: MSS SP-80; Class 125, 200-psi CWP, or Class 150, 300-psi CWP; horizontal swing, Y-pattern, ASTM B 62 cast-bronze body and cap, rotating bronze disc with rubber seat or composition seat, threaded or soldered end connections:

B. Swing Check Valves, 3 Inches and Larger: MSS SP-71, Class 125, 200-psi CWP, ASTM A 126 cast-iron body and bolted cap, horizontal-swing bronze disc, flanged or grooved end connections.

C. Wafer Check Valves: Class 125, 200-psi CWP, ASTM A 126 cast-iron body, bronze disc/plates, stainless-steel pins and springs, Buna N seals, installed between flanges.

D. Lift Check Valves: Class 125, ASTM B 62 bronze body and cap (main components), horizontal or vertical pattern, lift-type, bronze disc or Buna N rubber disc with stainless-steel holder threaded or soldered end connections.

# PART 3 - EXECUTION

## 3.1 EXAMINATION

A. Examine piping system for compliance with requirements for installation tolerances and other conditions affecting performance of valves. Do not proceed with installation until unsatisfactory conditions have been corrected.

B. Examine valve interior for cleanliness, freedom from foreign matter, and corrosion. Remove special packing materials, such as blocks, used to prevent disc movement during shipping and handling.

C. Operate valves from fully open to fully closed positions. Examine guides and seats made accessible by such operation.

D. Examine threads on valve and mating pipe for form and cleanliness.

E. Examine mating flange faces for conditions that might cause leakage. Check bolting for proper size, length, and material. Check gasket material for proper size, material composition suitable for service, and freedom from defects and damage.

F. Do not attempt to repair defective valves; replace with new valves.

## 3.2 INSTALLATION

A. Install valves as indicated, according to manufacturer's written instructions.

B. Piping installation requirements are specified in other Division 22 Sections. Drawings indicate the general arrangement of piping, fittings, and specialties.

C. Install valves with unions or flanges at each piece of equipment arranged to allow servicing, maintenance, and equipment removal without system shutdown.

D. Locate valves for easy access and provide separate support where necessary.

E. Install valves in horizontal piping with stem at or above the center of the pipe.

F. Install valves in a position to allow full stem movement.

G. Installation of Check Valves: Install for proper direction of flow as follows:

1. Swing Check Valves: Horizontal position with hinge pin level.
2. Wafer Check Valves: Horizontal or vertical position, between flanges.
3. Lift Check Valve: With stem upright and plumb.

3.3 VALVE END SELECTION

A. Select valves with the following ends or types of pipe/tube connections:

1. Copper Tube Size, 2-1/2 Inches and Smaller: Solder ends, except provide threaded ends for heating hot water and low-pressure steam service.
2. Steel Pipe Sizes, 2-1/2 Inches and Smaller: Threaded or grooved end.
3. Steel Pipe Sizes, 3 Inches and Larger: Grooved end or flanged.

3.4 APPLICATION SCHEDULE

A. General Application: Use gate, ball, and butterfly valves for shutoff duty; globe, ball, and butterfly for throttling duty. Refer to piping system Specification Sections for specific valve applications and arrangements.

B. Domestic Water Systems: Use the following valve types:

1. Gate Valves: Class 125, bronze or cast-iron body to suit piping system.
2. Ball Valves: Class 150, 600-psi CWP, with stem extension.
3. Globe Valves: Class 125, bronze or cast-iron body to suit piping system, and bronze or teflon disc.
4. Butterfly Valves: Nickel-plated ductile iron, aluminum bronze, or elastomer-coated ductile iron disc; EPDM or Buna N sleeve and stem seals.
5. Bronze Swing Check: Class 125, with rubber seat.
6. Check Valves: Class 125, swing or wafer type as indicated.

3.5 ADJUSTING

A. Adjust or replace packing after piping systems have been tested and put into service, but before final adjusting and balancing. Replace valves if leak persists.

**END OF SECTION 220523**

**SECTION 220720 - PIPE INSULATION FOR PLUMBING**

PART 1 - GENERAL

1.1 RELATED DOCUMENTS

A. Drawings and general provisions of the Contract, including General and Supplementary Conditions and Division 1 Specification Sections, apply to this Section.

1.2 SUMMARY

A. This Section includes preformed, rigid and flexible pipe insulation; insulating cements; field-applied jackets; accessories and attachments; and sealing compounds.

1.3 SUBMITTALS

A. Product Data: Include product data description, list of materials, thickness, density, k-values and r-values for each product type, locations, manufacturer's installation instructions, flames spread and smoke developed ratings.

B. See "Submittal Schedule" located at the end of Section 220720 – General Mechanical Requirements.

1.4 QUALITY ASSURANCE

A. Fire-Test-Response Characteristics: As determined by testing materials identical to those specified in this Section according to ASTM E 84, by a testing and inspecting agency acceptable to authorities having jurisdiction. Factory label insulation and jacket materials and sealer and cement material containers with appropriate markings of applicable testing and inspecting agency.

1. Insulation Installed Indoors: Flame-spread rating of 25 or less, and smoke-developed rating of 50 or less.
2. Insulation Installed Outdoors: Flame-spread rating of 75 or less, and smoke-developed rating of 150 or less.

PART 2 - PRODUCTS

2.1 MANUFACTURERS

A. Manufacturers: Subject to compliance with requirements, provide products by one of the following:

1. Mineral-Fiber Insulation:

a. CertainTeed Manson.
b. Knauf FiberGlass GmbH.
c. Owens-Corning Fiberglas Corp.
d. Schuller International, Inc.

2. Flexible Elastomeric Thermal Insulation:

   a. Armstrong World Industries, Inc.
   b. Rubatex Corp.

## 2.2 INSULATION MATERIALS

A. Mineral-Fiber Insulation: Glass fibers bonded with a thermosetting resin complying with the following:

1. Preformed Pipe Insulation: Comply with ASTM C 547, Type 1, with factory-applied, all-purpose, vapor-retarder jacket.
2. Blanket Insulation: Comply with ASTM C 553, Type II, without facing.
3. Fire-Resistant Adhesive: Comply with MIL-A-3316C in the following classes and grades:

   a. Class 1, Grade A for bonding glass cloth and tape to unfaced glass-fiber insulation, for sealing edges of glass-fiber insulation, and for bonding lagging cloth to unfaced glass-fiber insulation.
   b. Class 2, Grade A for bonding glass-fiber insulation to metal surfaces.

4. Vapor-Retarder Mastics: Fire- and water-resistant, vapor-retarder mastic for indoor applications. Comply with MIL-C-19565C, Type II.
5. Mineral-Fiber Insulating Cements: Comply with ASTM C 195.
6. Mineral-Fiber, Hydraulic-Setting Insulating and Finishing Cement: Comply with ASTM C 449/C 449M.

B. Flexible Elastomeric Thermal Insulation: Closed-cell, sponge- or expanded-rubber materials. Comply with ASTM C 534, Type I for tubular materials and Type II for sheet materials.

1. Adhesive: As recommended by insulation material manufacturer.
2. Ultraviolet-Protective Coating: As recommended by insulation manufacturer.

C. Prefabricated Thermal Insulating Fitting Covers: Comply with ASTM C 450 for dimensions used in pre-forming insulation to cover valves, elbows, tees, and flanges.

D. Standard PVC Fitting Covers: Factory-fabricated fitting covers manufactured from 20-mil- thick, high-impact, ultraviolet-resistant PVC.

1. Shapes: 45- and 90-degree, short- and long-radius elbows, tees, valves, flanges, reducers, end caps, soil-pipe hubs, traps, mechanical joints, and P-trap and supply covers for lavatories for the disabled.
2. Adhesive: As recommended by insulation material manufacturer.

## 2.3 ACCESSORIES AND ATTACHMENTS

A. Glass Cloth and Tape: Comply with MIL-C-20079H, Type I for cloth and Type II for tape. Woven glass-fiber fabrics, plain weave, pre-sized a minimum of 8 oz./sq. yd, 4 inch tape width.

B. Bands: 3/4 inch wide, materials compatible with jacket:

C. Wire: 0.080-inch, nickel-copper alloy; 0.062-inch, soft-annealed, stainless steel; or 0.062-inch, soft-annealed, galvanized steel.

## 2.4 VAPOR RETARDERS

A. Mastics: Materials recommended by insulation material manufacturer that are compatible with insulation materials, jackets, and substrates.

# PART 3 - EXECUTION

## 3.1 EXAMINATION AND PREPARATION

A. Examine substrates and conditions for compliance with requirements for installation and other conditions affecting performance of insulation application.

B. Surface Preparation: Clean and dry pipe and fitting surfaces. Remove materials that will adversely affect insulation application.

## 3.2 GENERAL APPLICATION REQUIREMENTS

A. Apply insulation materials, accessories, and finishes according to the manufacturer's written instructions; with smooth, straight, and even surfaces; free of voids throughout the length of piping, including fittings, valves, and specialties.

B. Refer to schedules at the end of this Section for materials, forms, jackets, and thicknesses required for each piping system.

C. Seal joints and seams with vapor-retarder mastic on insulation indicated to receive a vapor retarder.

D. Apply insulation with tight longitudinal seams and end joints. Bond seams and joints with adhesive recommended by the insulation material manufacturer.

E. Apply insulation with the least number of joints practical.

F. Apply insulation over fittings, valves, and specialties, with continuous thermal and vapor-retarder integrity, unless otherwise indicated. Refer to special instructions for applying insulation over fittings, valves, and specialties.

G. Hangers and Anchors: Where vapor retarder is indicated, seal penetrations in insulation at hangers, supports, anchors, and other projections with vapor-retarder mastic.

H. Insulation Terminations: For insulation application where vapor retarders are indicated, taper insulation ends. Seal tapered ends with a compound recommended by the insulation material manufacturer to maintain vapor retarder.

I. Apply adhesives and mastics at the manufacturer's recommended coverage rate.

J. Apply insulation with integral jackets as follows:

1. Pull jacket tight and smooth.
2. Circumferential Joints: Cover with 3-inch- wide strips, of same material as insulation jacket. Secure strips with adhesive and outward clinching staples along both edges of strip and spaced 4 inches o.c.
3. Longitudinal Seams: Overlap jacket seams at least 1-1/2 inches. Apply insulation with longitudinal seams at bottom of pipe. Clean and dry surface to receive self-sealing lap.

4. Vapor-Retarder Mastics: Where vapor retarders are indicated, apply mastic on seams and joints and at ends adjacent to flanges, unions, valves, and fittings.
5. At penetrations in jackets for thermometers and pressure gages, fill and seal voids with vapor-retarder mastic.

K. Roof Penetrations: Apply insulation for interior applications to a point even with top of roof flashing.

L. Exterior Wall Penetrations: For penetrations of below-grade exterior walls, terminate insulation flush with mechanical sleeve seal. Seal terminations with vapor-retarder mastic.

M. Interior Wall and Partition Penetrations: Apply insulation continuously through walls and floors.

N. Floor Penetrations: Apply insulation continuously through floor assembly.

## 3.3 MINERAL-FIBER INSULATION APPLICATION

A. Apply insulation to straight pipes and tubes buy securing each layer of preformed pipe insulation to pipe with wire, tape, or bands without deforming insulation materials.

B. Apply preformed pipe insulation to outer diameter of pipe flange.

C. Apply insulation to fittings and elbows as follows:

1. Apply premolded insulation sections of the same material as straight segments of pipe insulation when available. Secure according to manufacturer's written instructions.
2. When premolded insulation elbows and fittings are not available, apply mitered sections of pipe insulation, or glass-fiber blanket insulation, to a thickness equal to adjoining pipe insulation. Secure insulation materials with wire, tape, or bands.
3. Cover fittings with standard PVC fitting covers.

D. Apply insulation to valves and specialties as follows:

1. Apply premolded insulation sections of the same material as straight segments of pipe insulation when available. Secure according to manufacturer's written instructions.
2. When premolded insulation sections are not available, apply glass-fiber blanket insulation to valve body. Arrange insulation to permit access to packing and to allow valve operation without disturbing insulation.
3. Use preformed standard PVC fitting covers for valve sizes where available. Secure fitting covers with manufacturer's attachments and accessories. Seal seams with tape and vapor-retarder mastic.
4. For larger sizes where PVC fitting covers are not available, seal insulation with canvas jacket and sealing compound recommended by the insulation material manufacturer.

## 3.4 FLEXIBLE ELASTOMERIC THERMAL INSULATION APPLICATION

A. Apply insulation to straight pipes and tubes as follows:

1. Follow manufacturer's written instructions for applying insulation.
2. Seal longitudinal seams and end joints with manufacturer's recommended adhesive. Cement to avoid openings in insulation that will allow passage of air to the pipe surface.

B. Apply pipe insulation to outer diameter of pipe flanges.

C. Apply insulation to fittings and elbows as follows:

1. Apply mitered sections of pipe insulation.
2. Secure insulation materials and seal seams with manufacturer's recommended adhesive. Cement to avoid openings in insulation that will allow passage of air to the pipe surface.

D. Apply insulation to valves and specialties as follows:

1. Apply preformed valve covers manufactured of the same material as pipe insulation and attached according to the manufacturer's written instructions.
2. Apply cut segments of pipe and sheet insulation to valve body. Arrange insulation to permit access to packing and to allow valve operation without disturbing insulation.
3. Secure insulation to valves and specialties and seal seams with manufacturer's recommended adhesive. Cement to avoid openings in insulation that will allow passage of air to the pipe surface.

3.5 INSULATION APPLICATION SCHEDULE

A. Items Not Insulated: Unless otherwise indicated, do not apply insulation to the following systems, materials, and equipment:

1. Flexible connectors.
2. Vibration-control devices.
3. Fire-suppression piping.
4. Drainage piping located in crawl spaces, unless otherwise indicated.
5. Below-grade piping, unless otherwise indicated.
6. Chrome-plated pipes and fittings, unless potential for personnel injury.
7. Air chambers, unions, strainers, check valves, plug valves, and flow regulators.

B. Service: Domestic cold water (CW).

1. Insulation Material: Mineral fiber.
2. Insulation Thickness: 1/2”
3. Vapor Retarder Required: Yes.

C. Service: Domestic hot water and circulating water (HW, HWC).

1. Insulation Material: Mineral fiber
2. Insulation Thickness: Apply the following insulation thicknesses:
   a. Systems Without Recirculation: 1/2”
   b. 1/2” to 2” pipe: 1”
   c. 2 ½” and larger: 1-1/2”
3. Vapor Retarder Required: No.

D. Service: Domestic hot and cold water, direct buried.

1. Insulation Material: Flexible elastomeric.
2. Insulation Thickness: 3/4”
3. Vapor Retarder Required: Yes.

**END OF SECTION 220720**

**SECTION 221116 - WATER DISTRIBUTION PIPING**

PART 1 - GENERAL

1.1 RELATED DOCUMENTS

A. Drawings and general provisions of the Contract, including General and Supplementary Conditions and Division 1 Specification Sections, apply to this Section.

1.2 SUMMARY

A. This Section includes water distribution piping from locations indicated to fixtures and equipment inside building.

1.3 SYSTEM PERFORMANCE REQUIREMENTS

A. Provide components and installation capable of producing piping systems with the 125 psig minimum working-pressure ratings, unless otherwise indicated:

1.4 QUALITY ASSURANCE

A. Provide listing/approval stamp, label, or other marking on piping made to specified standards.

B. Comply with ASME B31.9, "Building Services Piping," for materials, products, and installation.

PART 2 - PRODUCTS

2.1 PIPES AND TUBES

A. General: Applications of the following pipe and tube materials are indicated in Part 3 "Piping Applications" Article.

B. Soft Copper Tube: ASTM B 88, Types K, water tube, annealed temper.

C. Hard Copper Tube: ASTM B 88, Types L, water tube, drawn temper.

D. Ductile-Iron Pipe: AWWA C151, 250-psig minimum pressure rating with mechanical- or push-on-joint bell, plain spigot end, and AWWA C104 cement-mortar lining. Include AWWA C111 ductile-iron gland, rubber gasket, and steel bolts with mechanical-joint pipe. Include AWWA C111 rubber gasket with push-on-joint pipe.

2.2 PIPE AND TUBE FITTINGS

A. General: Applications of the following pipe and tube fitting materials are indicated in Part 3 "Piping Applications" Article.

B. Copper, Solder-Joint Pressure Fittings: ASME B16.18 cast-copper alloy or ASME B16.22 wrought copper.

C. Copper, Grooved-End Fittings: ASTM B 75 copper tube or ASTM B 584 bronze castings.

D. Bronze Flanges: ASME B16.24, Class 150, with solder-joint end. Furnish Class 300 flanges if required to match piping.

E. Copper Unions: ASME B16.18, cast-copper-alloy, hexagonal-stock body with ball-and-socket joint, metal-to-metal seating surfaces, and solder-joint, threaded, or solder-joint and threaded ends. Include threads conforming to ASME B1.20.1 on threaded ends.

F. Ductile-Iron, Mechanical-Joint Fittings: AWWA C110, ductile- or gray-iron standard pattern; or AWWA C153, ductile-iron compact pattern; with 250-psig minimum pressure rating and AWWA C104 cement-mortar lining. Include AWWA C111 ductile- or gray-iron glands, rubber gaskets, and steel bolts with mechanical-joint fittings. Include AWWA C111 rubber gaskets with push-on-joint fittings.

## 2.3 JOINING MATERIALS

A. General: Applications of the following piping joining materials are indicated in Part 3 "Piping Applications" Article.

B. Refer to Division 22 Section "Basic Mechanical Materials and Methods" for commonly used joining materials.

C. Solder: ASTM B 32, Alloy Sn95, Sn94, or E; lead free.

D. Brazing Filler Metal: AWS A5.8, BCuP, copper phosphorus or BAg, silver classification.

E. Transition Couplings: Coupling or other manufactured fitting same size as, with pressure rating at least equal to, and with ends compatible with piping to be joined.

## 2.4 VALVES

A. Refer to Division 22 Section "Valves" for general-duty valves.

B. Refer to Division 22 Section "Plumbing Specialties" for special-duty valves.

# PART 3 - EXECUTION

## 3.1 PIPING APPLICATIONS

A. Transition and special fittings with pressure ratings at least equal to piping pressure rating may be used in applications below, unless otherwise indicated.

B. Service Entrance Piping, Underground:

1. 3 Inch NPS and Smaller: Soft copper tube, Type K; copper, solder-joint pressure fittings; and brazed joints.
2. 4- to 12-Inch NPS: Ductile-iron pipe and fittings, and mechanical or push-on joints.

C. Water Distribution Piping:

1. Aboveground: 1/2” to 6-Inch NPS: Hard copper tube, Type L; copper, solder-joint fittings; and soldered joints.
2. Underground: Soft copper tube, Type K; wrought-copper, solder-joint pressure fittings; and soldered joints.

## 3.2 VALVE APPLICATIONS

A. Drawings indicate valve types to be used. Where specific valve types are not indicated, the following requirements apply:

1. Shutoff Duty: Use gate, ball, or butterfly valves.
2. Throttling Duty: Use globe, ball, or butterfly valves.

B. Grooved-end butterfly valves may be used with grooved-end piping.

## 3.3 PIPING INSTALLATION, GENERAL

A. Refer to Division 23 Section "Basic Piping Materials and Methods" for basic piping installation.

B. Install piping level without pitch or with 0.25 percent slope downward toward drain when drains are indicated.

## 3.4 SERVICE ENTRANCE PIPING INSTALLATION

A. Extend service entrance piping to exterior water service piping in sizes and locations indicated for service entrances into building.

B. Rough-in water piping for water meter installation according to utility company's requirements. Verify water meter requirements with utility company. Provide water meters as required by utility company.

C. Install shutoff valve, hose-end drain valve, strainer, pressure gage, and test tee with valve, inside building at each service entrance pipe.

D. Install water-pressure regulators downstream from shutoff valves. Refer to Division 22 Section "Plumbing Specialties" for water-pressure regulators.

E. Ductile-Iron, Service Entrance Piping: Comply with AWWA C600. Install buried piping between shutoff valve and connection to water service piping with restrained joints. Anchor pipe to wall or floor at entrance. Include thrust-block supports at vertical and horizontal offsets.

F. Install wall penetration system at each service entrance pipe penetration through foundation wall. Make installation watertight. Refer to Division 22 Section "Basic Mechanical Materials and Methods" for wall penetration systems.

## 3.5 JOINT CONSTRUCTION

A. Refer to Division 22 Section "Basic Mechanical Materials and Methods" for basic piping joint construction.

## 3.6 VALVE INSTALLATION

A. Sectional Valves: Install sectional valves close to main on each branch and riser serving plumbing fixtures or equipment, and where indicated. Use gate or ball valves for piping 2-inch NPS and smaller. Use gate or butterfly valves for piping 2-1/2-inch NPS and larger.

B. Shutoff Valves: Install shutoff valve on each water supply to equipment, on each supply to plumbing fixtures without supply stops, and where indicated. Use gate or ball valves for piping 2-inch NPS and smaller. Use gate or butterfly valves for piping 2-1/2-inch NPS and larger.

C. Drain Valves: Install hose-end drain valves for equipment, at base of each water riser, at low points in horizontal piping, and where required to drain water piping.

D. Calibrated Balancing Valves: Install in each hot-water circulation return branch, discharge side of each pump and circulator, and where indicated. Refer to Division 22 Section "Plumbing Specialties" for calibrated balancing valves.

## 3.7 FIELD QUALITY CONTROL

A. Do not enclose, cover, or put piping into operation until it is inspected and approved by authorities having jurisdiction.

B. Test service entrance piping and water distribution piping as follows:

1. Test for leaks and defects in new piping and parts of existing piping that have been altered, extended, or repaired. If testing is performed in segments, submit separate report for each test, complete with diagram of portion of piping tested.
2. Leave uncovered and unconcealed new, altered, extended, or replaced water piping until it has been tested and approved. Expose work that has been covered or concealed before it has been tested and approved.
3. Cap and subject piping to static water pressure of 50 psig above operating pressure, without exceeding pressure rating of piping system materials. Isolate test source and allow to stand for 4 hours. Leaks and loss in test pressure constitute defects that must be repaired.
4. Repair leaks and defects with new materials and retest piping or portion thereof until satisfactory results are obtained.
5. Prepare reports for tests and required corrective action.

## 3.8 CLEANING

A. Clean and disinfect service entrance piping and water distribution piping as follows:

1. Purge new piping and parts of existing water piping that have been altered, extended, or repaired before using.
2. Use purging and disinfecting procedure prescribed by authorities having jurisdiction or, if method is not prescribed, procedure described in either AWWA C651 or AWWA C652 or as described below:

   a. Flush piping system with clean, potable water until dirty water does not appear at outlets.
   b. Fill and isolate system according to either of the following:

      1) Fill system or part thereof with water/chlorine solution with at least 50 ppm of chlorine. Isolate with valves and allow to stand for 24 hours.

2) Fill system or part thereof with water/chlorine solution with at least 200 ppm of chlorine. Isolate and allow to stand for 3 hours.

c. Flush system with clean, potable water until chlorine is no longer in water coming from system after the standing time.

B. Prepare and submit reports for purging and disinfecting activities.

C. Clean interior of piping system. Remove dirt and debris as work progresses.

3.9 START-UP

A. Fill water piping. Check components to determine that they are not air bound and that piping is full of water.

B. Perform the following steps before putting into operation:

1. Close drain valves, hydrants, and hose bibbs.
2. Open shutoff valves to fully open position.
3. Open throttling valves to proper setting.
4. Remove plugs used during testing of piping and plugs used for temporary sealing of piping during installation.
5. Remove and clean strainer screens. Close drain valves and replace drain plugs.

C. Check plumbing equipment and verify proper settings, adjustments, and operation. Do not operate water heaters before filling with water.

D. Set water-pressure regulators at 80 psig maximum outlet pressure, unless otherwise indicated.

**END OF SECTION 221116**

**SECTION 221123 - DOMESTIC WATER PUMPS**

PART 1 - GENERAL

1.1 RELATED DOCUMENTS

A. Drawings and general provisions of the Contract, including General and Supplementary Conditions and Division 1 Specification Sections, apply to this Section.

1.2 SUMMARY

A. This Section includes all-bronze and bronze-fitted centrifugal pumps for domestic cold- and hot-water circulation.

1.3 SUBMITTALS

A. Product Data: For each type and size of domestic water pump specified. Include certified performance curves with operating points plotted on curves; and rated capacities of selected models, furnished specialties, and accessories.

B. Shop Drawings: Diagram power, signal, and control wiring.

C. Operation and Maintenance Data: For domestic water pumps to include in operation and maintenance manuals.

D. See “Submittal Schedule” located at the end of Section 220100 – General Mechanical Requirements.

1.4 QUALITY ASSURANCE

A. Product Options: Drawings indicate size, profiles, and dimensional requirements of domestic water pumps and are based on the specific system indicated. Refer to Division 1 Section "Product Requirements."

B. Electrical Components, Devices, and Accessories: Listed and labeled as defined in NFPA 70, Article 100, by a testing agency acceptable to authorities having jurisdiction, and marked for intended use.

C. UL Compliance: Comply with UL 778 for motor-operated water pumps.

PART 2 - PRODUCTS

2.1 MANUFACTURERS

A. Manufacturers: Subject to compliance with requirements, provide products by one of the manufacturers specified.

1. Armstrong Pumps Inc.

2. Bell & Gossett Domestic Pump; ITT Industries.
3. Grundfos Pumps Corp.
4. Taco, Inc.

## 2.2 CLOSE COUPLED, IN-LINE, CENTRIFUGAL PUMPS

A. Description: Factory-assembled and -tested, single-stage, close-coupled, in-line, sealless centrifugal pumps as defined in HI 5.1-5.6.

1. Pump and Motor Assembly: Hermetically sealed, replaceable-cartridge-type unit with motor and impeller on common shaft and designed for installation with pump and motor shaft mounted horizontally.
2. Casing: Bronze, with threaded companion-flange connections.
3. Impeller: Corrosion-resistant material.
4. Motor: Single speed, unless otherwise indicated.

# PART 3 - EXECUTION

## 3.1 PUMP INSTALLATION

A. Comply with HI 1.4.

B. Install pumps with access for periodic maintenance including removal of motors, impellers, couplings, and accessories.

C. Independently support pumps and piping so weight of piping is not supported by pumps and weight of pumps is not supported by piping.

## 3.2 CONNECTIONS

A. Piping installation requirements are specified in other Division 22 Sections. Drawings indicate general arrangement of piping, fittings, and specialties.

B. Install piping adjacent to pumps to allow service and maintenance.

C. Connect domestic water piping to pumps. Install suction and discharge piping equal to or greater than size of pump nozzles.

D. Install shutoff valve and strainer on suction side of pumps, and check valve and throttling valve on discharge side of pumps. Install valves same size as connected piping.

## 3.3 START UP

A. Verify that pumps are installed and connected according to the Contract Documents.

B. Perform the following preventive maintenance operations and checks before starting:
1. Verify that pumps are free to rotate by hand and that pumps for handling hot liquids are free to rotate with pumps hot and cold. Do not operate pumps if they are bound or drag, until cause of trouble is determined and corrected.
2. Check suction piping connections for tightness to avoid drawing air into pumps.

3. Clean strainers.
4. Verify that pump controls are correct for required application.

3.4 DEMONSTRATION

A. Engage a factory-authorized service representative to train Owner's maintenance personnel to adjust, operate, and maintain domestic water pumps.

**END OF SECTION 221123**

# SECTION 221316 - DRAINAGE AND VENT PIPING

## PART 1 - GENERAL

### 1.1 RELATED DOCUMENTS

A. Drawings and general provisions of the Contract, including General and Supplementary Conditions and Division 1 Specification Sections, apply to this Section.

### 1.2 SUMMARY

A. This Section includes sanitary drainage and vent piping, and storm drainage piping inside building and to locations indicated.

### 1.3 SYSTEM PERFORMANCE REQUIREMENTS

A. Provide components and installation capable of producing piping systems with following minimum working-pressure ratings, unless otherwise indicated:

1. Soil, Waste, and Vent Piping: 10-foot head of water.
2. Storm Drainage Piping: 10-foot head of water.
3. Force-Main Piping: 100 psig.

### 1.4 SUBMITTALS

A. Test Results and Reports: Specified in "Field Quality Control" Article.

### 1.5 QUALITY ASSURANCE

A. Provide listing/approval stamp, label, or other marking on piping made to specified standards.

B. Comply with ASME B31.9, "Building Services Piping," for materials, products, and installation.

## PART 2 - PRODUCTS

### 2.1 PIPES AND TUBES

A. General: Applications of the following pipe and tube materials are indicated in Part 3 "Piping Applications" Article.

B. Hub-and-Spigot, Cast-Iron Soil Pipe: ASTM A 74, Service and Extra Heavy classes. Include ASTM C 564 rubber gasket, with dimensions required for pipe class, for each hub.

C. Hubless, Cast-Iron Soil Pipe: ASTM A 888 or CISPI 301.

D. Hard Copper Tube: ASTM B 88, Types L and M, water tube, drawn temper.

E. Hard Copper Tube: ASTM B 306, drainage tube, drawn temper.

F. Galvanized Steel Pipe: ASTM A 53, Type E or S, Grade A or B, Schedule 40.

G. PVC Plastic Pipe: ASTM D 2661, Schedule 40.

2.2 PIPE AND TUBE FITTINGS

A. General: Applications of the following pipe and tube fitting materials are indicated in Part 3 "Piping Applications" Article.

B. Threaded-Fitting, End Connections: ASME B1.20.1.

C. Hub-and-Spigot, Cast-Iron, Soil-Pipe Fittings: ASTM A 74, Service and Extra Heavy classes, hub and spigot. Include ASTM C 564 rubber gasket, with dimensions required for pipe class, for each hub.

D. Hubless, Cast-Iron, Soil-Pipe Fittings: CISPI 301.

E. Copper, Solder-Joint Drainage Fittings: ASME B16.23 cast copper or ASME B16.29 wrought copper.

F. PVC Socket Fittings: ASTM D 2665, made to ASTM D 3311 drain, waste, and vent pipe patterns.

2.3 JOINING MATERIALS

A. Refer to Division 23 Section "Basic Piping Materials and Methods" for commonly used joining materials.

B. Solder: ASTM B 32, Alloy Sn95, Sn94, or E; lead free.

C. Hubless, Cast-Iron, Soil-Piping Couplings: ASTM C 1277 assembly of metal housing, corrosion-resistant fasteners, and ASTM C 564 rubber sleeve or gasket with integral, center pipe stop. Neoprene Couplings with stainless steel clamps, CISPI 310.

PART 3 - EXECUTION

3.1 PIPING APPLICATIONS

A. Transition and special fittings with pressure ratings at least equal to piping pressure rating may be used in applications below, unless otherwise indicated.

B. Aboveground, Sanitary Waste, and Vent Piping: Use the following:

1. 1-1/2 to 10-Inch NPS: Hubless, cast-iron soil pipe; hubless, cast-iron, soil-pipe fittings; and hubless, cast-iron, soil-piping couplings:
2. 1-1/4 to 4-Inch NPS: Hard copper drainage tube; copper, solder-joint drainage fittings; and soldered joints.
3. 1-1/4 to 12-Inch NPS: PVC plastic pipe, PVC socket fittings, and solvent-cemented joints. Do not install PVC piping in return air plenum.

C. Underground, Sanitary Waste, and Vent Piping: Use the following:

1. 2- to 12-Inch NPS: Hub-and-spigot, cast-iron soil pipe, Service class; hub-and-spigot, cast-iron, soil-pipe fittings, Service class; and compression joints.
2. 2- to 12-Inch NPS: PVC plastic pipe, PVC socket fittings and solvent welded joints.

D. Forced Mains (piping under pressure): Use the following:

1. Hard copper water tube, Type L; copper, solder-joint pressure fittings; and soldered joints.
2. Galvanized steel pipe and cast-iron, threaded fittings.

## 3.2 PIPING INSTALLATION

A. Refer to Division 22 Section "Basic Piping Materials and Methods" for basic piping installation.

B. Extend building sanitary drain piping and connect to sanitary sewer piping in sizes and locations indicated for service entrances into building. Install double grade cleanout and extension to grade at connections of building sanitary drains with building sanitary sewers.

C. Extend building storm drain piping and connect to storm sewer piping in sizes and locations indicated for service entrances into building. Install double grade cleanout and extension to grade at connections of building storm drains and building storm sewers.

D. Install wall penetration system at each service entrance pipe penetration through foundation wall. Make installation watertight. Refer to Division 23 Section "Basic Mechanical Materials and Methods" for wall penetration systems.

E. Install cast-iron soil piping according to CISPI's "Cast Iron Soil Pipe and Fittings Handbook," Chapter IV, "Installation of Cast Iron Soil Pipe and Fittings."

F. Make changes in direction for drainage and vent piping using appropriate branches, bends, and long-sweep bends. Sanitary tees and short-sweep 1/4 bends may be used on vertical stacks if change in direction of flow is from horizontal to vertical. Use long-turn, double Y-branch and 1/8-bend fittings if 2 fixtures are installed back to back or side by side with common drain pipe. Straight tees, elbows, and crosses may be used on vent lines. Do not make change in direction of flow greater than 90 degrees. Use proper size of standard increasers and reducers if different sizes of piping are connected. Reducing size of drainage piping in direction of flow is prohibited.

G. Lay buried building drain piping beginning at low point of each system. Install true to grades and alignment indicated, with unbroken continuity of invert. Place hub ends of piping upstream. Install required gaskets according to manufacturer's written instructions for use of lubricants, cements, and other installation requirements. Maintain swab in piping and pull past each joint as completed.

H. Install drainage and vent piping at the following minimum slopes, unless otherwise indicated:

1. Sanitary Drain: 1/4” per foot downward in direction of flow for piping 3-inch NPS and smaller; 1/8” per foot downward in direction of flow for piping 4-inch NPS and larger.
2. Vent Piping: 1/8” per foot downward toward vertical fixture vent or toward vent stack.

I. Cast-Iron, Soil-Piping Joints: Make joints according to CISPI's "Cast Iron Soil Pipe and Fittings Handbook," Chapter IV, "Installation of Cast Iron Soil Pipe and Fittings."

1. Compression Joints: Make with rubber gasket matching class of pipe and fittings.
2. Hubless Joints: Make with rubber gasket and sleeve or clamp.

J. PVC Piping Joints: Join drainage piping according to ASTM D 2665.

K. Install indirect waste piping per local code requirements. Maintain code required air gaps.

## 3.3 FIELD QUALITY CONTROL

A. Do not enclose, cover, or put piping into operation until it is inspected and approved by authorities having jurisdiction.

B. Test drainage and vent piping according to procedures of authorities having jurisdiction or, in absence of published procedure, as follows:

1. Test for leaks and defects in new piping and parts of existing piping that have been altered, extended, or repaired. If testing is performed in segments, submit separate report for each test, complete with diagram of portion of piping tested.
2. Leave uncovered and unconcealed new, altered, extended, or replaced drainage and vent piping until it has been tested and approved. Expose work that has been covered or concealed before it has been tested and approved.
3. Roughing-In Plumbing Test Procedure: Test drainage and vent piping, except outside leaders, on completion of roughing-in. Close openings in piping system and fill with water to point of overflow, but not less than 10 feet of head. Water level must not drop from 15 minutes before inspection starts through completion of inspection. Inspect joints for leaks.
4. Finished Plumbing Test Procedure: After plumbing fixtures have been set and traps filled with water, test connections and prove they are gastight and watertight. Plug vent-stack openings on roof and building drains where they leave building. Introduce air into piping system equal to pressure of 1-inch wg. Use U-tube or manometer inserted in trap of water closet to measure this pressure. Air pressure must remain constant without introducing additional air throughout period of inspection. Inspect plumbing fixture connections for gas and water leaks.
5. Repair leaks and defects using new materials and retest piping or portion thereof until satisfactory results are obtained.
6. Prepare reports for tests and required corrective action.

## 3.4 CLEANING AND PROTECTING

A. Clean interior of piping system. Remove dirt and debris as work progresses.

B. Protect drains during remainder of construction period to avoid clogging with dirt and debris and to prevent damage from traffic and construction work.

C. Place plugs in ends of uncompleted piping at end of day and when work stops.

**END OF SECTION 221316**

**SECTION 221319 - PLUMBING SPECIALTIES**

PART 1 - GENERAL

1.1 RELATED DOCUMENTS

A. Drawings and general provisions of the Contract, including General and Supplementary Conditions and Division 1 Specification Sections, apply to this Section.

1.2 SUMMARY

A. This Section includes plumbing specialties for the following:

1. Water distribution systems.
2. Soil, waste, and vent systems.
3. Storm drainage systems.

1.3 SYSTEM PERFORMANCE REQUIREMENTS

A. Provide components and installation capable of producing piping systems with following minimum working-pressure ratings, unless otherwise indicated:

1. Water Distribution Piping: 125 psig.
2. Soil, Waste, and Vent Piping: 10-foot head of water.
3. Storm Drainage Piping: 10-foot head of water.
4. Force-Main Piping: 100 psig.

1.4 SUBMITTALS

A. Product Data: For each plumbing specialty indicated. Include rated capacities of selected equipment and shipping, installed, and operating weights. Indicate materials, finishes, dimensions, required clearances, and methods of assembly of components; and piping and wiring connections for the following plumbing specialty products:

1. Backflow preventers.
2. Water regulators.
3. Balancing valves.
4. Strainers.
5. Water hammer arresters.
6. Trap seal primer valves and systems.
7. Drain valves.
8. Hose bibbs and hydrants.
9. Outlet boxes.
10. Backwater valves.
11. Cleanouts.
12. Floor drains and trench drains.
13. Vent caps, vent terminals, and roof flashing assemblies.

B. Reports: Specified in "Field Quality Control" Article.

C. Maintenance Data: For specialties to include in the maintenance manuals. Include the following:

1. Backflow preventers.
2. Water regulators.
3. Thermostatic water mixing valves and water tempering valves.
4. Trap seal primer valves and systems.
5. Hose stations.
6. Sanitary hydrants.
7. Backwater valves.

1.5 QUALITY ASSURANCE

A. Product Options: Drawings indicate size, profiles, dimensional requirements, and characteristics of plumbing specialties and are based on the specific types and models indicated. Other manufacturers' products with equal performance characteristics may be considered. Refer to Division 1 Section "Substitutions."

B. Provide listing/approval stamp, label, or other marking on plumbing specialties made to specified standards.

C. Listing and Labeling: Provide electrically operated plumbing specialties specified in this Section that are listed and labeled as defined in National Electrical Code, Article 100.

D. Comply with ASME B31.9, "Building Services Piping," for materials, products, and installation.

E. Comply with NFPA 70, "National Electrical Code," for electrical components.

PART 2 - PRODUCTS

2.1 MANUFACTURERS

A. Manufacturers: Subject to compliance with requirements, provide products by one of the following:

1. Backflow Preventers:

a. Ames Co., Inc.
b. B & K Industries, Inc.
c. Cla-Val Co.
d. CMB Industries; Febco Div.
e. Conbraco Industries, Inc.
f. FLOMATIC Corp.
g. Grinnell Corp.; Mueller Co. Marketing Group for Hersey Products Div.
h. IMI Cash Valve.
i. Sparco, Inc.
j. Watts Industries, Inc.; Water Products Div.
k. Zurn Industries, Inc.; Wilkins Div.

2. Water Pressure Regulators:

a. Bermad, Inc.
b. Cashco, Inc.
c. Cla-Val Co.

d. Conbraco Industries, Inc.
e. FLOMATIC Corp.
f. G A Industries, Inc.
g. Honeywell Braukmann.
h. IMI Cash Valve.
i. Kaye & Mac Donald, Inc.
j. Keckley: O.C. Keckley Co.
k. Spence Engineering Co., Inc.
l. Watts Industries, Inc.; Water Products Div.
m. Zurn Industries, Inc.; Wilkins Div.

3. Calibrated Balancing Valves:

a. Amtrol, Inc.
b. Armstrong Pumps, Inc.
c. Flow Design, Inc.
d. ITT Fluid Technology Corp.; ITT Bell & Gossett Div.
e. Taco, Inc.
f. Tour & Andersson, Inc.; Valve Div.
g. Watts Industries, Inc.; Water Products Div.

4. Memory-Stop Balancing Valves:

a. Crane Co.; Valve Div.
b. Grinnell Corp.
c. Hammond Valve Corp.
d. Milwaukee Valve Co., Inc.
e. Nibco, Inc.

5. Water Tempering Valves:

a. Conbraco Industries, Inc.
b. Heat-Timer Corp.
c. Holby Valve Co., Inc.
d. Honeywell Braukmann.
e. IMI Cash Valve.
f. Leonard Valve Co.
g. Sparco, Inc.
h. Watts Industries, Inc.; Water Products Div.

6. Outlet Boxes:

a. Acorn Engineering Co.
b. Guy Gray Manufacturing Co., Inc.
c. IPS Corp.
d. LSP-Specialty Products Co.
e. Oatey Co.
f. Plastic Oddities, Inc.
g. Symmons Industries, Inc.

7. Hydrants:

   a. Enpoco, Inc.
   b. Josam Co.
   c. Murdock, Inc.
   d. Smith: Jay R. Smith Mfg. Co.
   e. Tyler Pipe; Wade Div.
   f. Watts Industries, Inc.; Ancon Drain Div.
   g. Watts Industries, Inc.; Water Products Div.
   h. Woodford Manufacturing Co.
   i. Zurn Industries, Inc.; Hydromechanics Div.

8. Water Hammer Arresters:

   a. Amtrol, Inc.
   b. Enpoco, Inc.
   c. Josam Co.
   d. Precision Plumbing Products, Inc.
   e. Sioux Chief Manufacturing Co., Inc.
   f. Smith: Jay R. Smith Mfg. Co.
   g. Sparco, Inc.
   h. Tyler Pipe; Wade Div.
   i. Watts Industries, Inc.; Ancon Drain Div.
   j. Watts Industries, Inc.; Water Products Div.
   k. Zurn Industries, Inc.; Hydromechanics Div.

9. Trap Seal Primer Valves:

   a. Enpoco, Inc.
   b. Josam Co.
   c. Precision Plumbing Products, Inc.
   d. Smith: Jay R. Smith Mfg. Co.
   e. Tyler Pipe; Wade Div.
   f. Watts Industries, Inc.; Ancon Drain Div.
   g. Watts Industries, Inc.; Water Products Div.
   h. Zurn Industries, Inc.; Hydromechanics Div.

10. Backwater Valves:

   a. Enpoco, Inc.
   b. Josam Co.
   c. Smith: Jay R. Smith Mfg. Co.
   d. Watts Industries, Inc.; Ancon Drain Div.
   e. Zurn Industries, Inc.; Hydromechanics Div.
   f. Enpoco, Inc.
   g. Enpoco, Inc.

11. Floor Drains, Drain Specialties

   a. Josam Co.
   b. Sioux Chief Manufacturing Co., Inc.
   c. Smith: Jay R. Smith Mfg. Co.
   d. Tyler Pipe, Wade Div.
   e. Watts Industries, Inc., Ancon Drain Div.
   f. Zurn Industries, Inc., Hydromechanics Div.

## 2.2 BACKFLOW PREVENTERS

A. General: ASSE standard, backflow preventers, of size indicated for maximum flow rate and maximum pressure loss indicated.

1. 2-Inch NPS and Smaller: Bronze body with threaded ends.
2. 2-1/2-Inch NPS and Larger: Bronze, cast-iron, steel, or stainless-steel body with flanged ends.

   a. Interior Lining: AWWA C550 or FDA-approved, epoxy coating for backflow preventers having cast-iron or steel body.

3. Interior Components: Corrosion-resistant materials.
4. Exterior Finish: Polished chrome-plate if used in chrome-plated piping system.
5. Strainer on inlet.

B. Pipe-Applied, Atmospheric-Type Vacuum Breakers: ASSE 1001, with floating disc and atmospheric vent.

C. Hose-Connection Vacuum Breakers: ASSE 1011, nickel plated, with nonremovable and manual drain features, and ASME B1.20.7 garden-hose threads on outlet. Units attached to rough-bronze-finish hose connections may be rough bronze.

D. Intermediate Atmospheric-Vent Backflow Preventers: ASSE 1012, suitable for continuous pressure application. Include inlet screen and 2 independent check valves with intermediate atmospheric vent.

E. Reduced-Pressure-Principle Backflow Preventers: ASSE 1013, suitable for continuous pressure application. Include outside screw and yoke gate valves on inlet and outlet, and strainer on inlet; test cocks; and pressure-differential relief valve with ASME A112.1.2 air-gap fitting located between 2 positive-seating check valves.

F. Double-Check Backflow Prevention Assemblies: ASSE 1015, suitable for continuous pressure application. Include shutoff valves on inlet and outlet, and strainer on inlet; and test cocks with 2 positive-seating check valves.

G. Laboratory Faucet Vacuum Breakers: ASSE 1035, suitable for continuous pressure application and chrome plated; consisting of primary and secondary checks; intermediate vacuum breaker; and threaded ends, 1/4- or 3/8-inch NPS as required.

H. Hose-Connection Backflow Preventers: ASSE 1052, suitable for at least 3-gpm flow and applications with up to 10-foot head back pressure. Include 2 check valves; intermediate atmospheric vent; and non-removable, ASME B1.20.7 garden-hose thread on outlet.

## 2.3 WATER PRESSURE REGULATORS

A. General: water regulators, rated for initial working pressure of 150 psig minimum, of size, flow rate, and inlet and outlet pressures indicated. Include integral factory-installed or separate field-installed Y-pattern strainer.

1. 2-Inch NPS and Smaller: Bronze body, renewable nickel alloy seats, stainless steel internal parts, with threaded ends.
2. 2-1/2-Inch NPS and Larger: Bronze or cast-iron body, renewable stainless steel seats and renewable disc, with flanged ends.

## 2.4 BALANCING VALVES

A. Calibrated Balancing Valves: Adjustable, with 2 readout ports and memory setting indicator. Include manufacturer's standard hoses, fittings, valves, differential pressure meter, and carrying case.

1. 2-Inch NPS and Smaller: Bronze body with brass ball, adjustment knob, calibrated nameplate, and threaded or solder-joint ends.
2. 2-Inch NPS and Smaller: Bronze, Y-pattern body with adjustment knob and threaded ends.
3. 2-1/2-Inch NPS and Larger: Cast-iron, Y-pattern body with bronze disc and flanged or grooved ends.

B. Memory-Stop Balancing Valves, 2-Inch NPS and Smaller: ball valve, rated for 400-psig minimum CWP. Include 2-piece, ASTM B 62 bronze body with standard port, chrome-plated brass ball, replaceable seats and seals, blowout-proof stem, solder-joint ends, and vinyl-covered steel handle with memory-stop device.

## 2.5 STRAINERS

A. Strainers: Y-pattern, unless otherwise indicated, and full size of connecting piping. Include ASTM A 666, Type 304, stainless-steel screens with 3/64-inch round perforations, unless otherwise indicated. Screwed screen retainer with centered blowdown with hose-end drain valve

## 2.6 OUTLET BOXES

A. General: Recessed-mounting outlet boxes with fittings complying with ASME A112.18.1M. Include box with faceplate, services indicated for equipment connections, and wood-blocking reinforcement.

B. Clothes Washer Outlet Boxes: With recessed box and faceplate, two ½” hose connections with shut-off valves, 2” standpipe and drain, as indicated on drawings.

C. Ice Maker Outlet Boxes: With recessed box and faceplate, hose connection and shut-off valve.

## 2.7 INTERCEPTORS

A. Grease Interceptor: Construct grease interceptor per local code requirements.

B. Oil Interceptor: Construct oil interceptor per local code requirements.

C. Solids Interceptor: Construct solids interceptor per local code requirements.

## 2.8 HYDRANTS

A. Hose Bibb (HB-1): Bronze body, with renewable composition disc, 3/4-inch NPS threaded or solder-joint inlet. Provide garden-hose threads on outlet and integral, nonremovable, drainable, hose-connection with anti-siphon vacuum breaker Woodford model 24 or equal.

1. Finish: Rough brass.
2. Operation: Wheel handle.

B. Wall Hydrants (WH-1), nonfreeze, automatic draining, antibackflow type, key operation, with 3/4-inch NPS threaded or solder-joint inlet, and garden-hose threads on outlet. Include operating key for each hydrant. Woodford model 65 or equal.

1. Type: Surface Mount.
2. Finish: Chrome Plated.

## 2.9 CLEANOUTS

A. Cleanout Plugs: PVC Cast iron or brass, threads complying with ANSI B2.1, countersunk head. Engrave heads to identify system.

B. Floor Cleanouts: Cast iron body and frame with cleanout plug and adjustable round nickel bronze top. Provide to match floor system:

1. Exposed finish type, standard mill finish.
2. Exposed flush type, standard non-slip scored or abrasive finish.
3. Exposed flush type, standard mill finish and carpet marker.
4. Heavy duty for traffic applications.

C. Wall Cleanouts: Cast iron or PVC body adaptable to pipe with cast bronze, brass or PVC cleanout plug; stainless steel cover, vandal proof screws.

## 2.10 FLOOR DRAINS

A. Floor Drain D-1: See Schedule on drawings.

B. Floor Drain D-2: See Schedule on drawings.

## 2.11 FLASHING

A. Floor Drains: Non-plasticized, chlorinated, polyethylene, concealed, water-proof membrane, 0.40” thick, solvent weldable. 48” square minimum.

B. Vents thru Roof (VTR): 24” square minimum

1. Non-plasticized, chlorinated, polyethylene, concealed, water-proof membrane, 0.40” thick, solvent weldable.

## 2.12 MISCELLANEOUS PIPING SPECIALTIES

A. Backwater Valves: ASME A112.14.1, cast-iron body, with removable bronze swing-check valve and threaded or bolted cover.

B. Water Hammer Arresters: ASME A112.26.1M, ASSE 1010, or PDI-WH 201, bellows or piston type with pressurized cushioning chamber. Sizes are based on water-supply fixture units, ASME A112.26.1M sizes A through F and PDI-WH 201 sizes A through F.

C. Domestic water expansion tanks: Precharged hydropneumatic expansion tank approved for potable water, with steel shell, polyproylene liner, stainless steel system connection and FDA diaphragm. Working temperature and pressure shall be 200ºF and 150 psig. Tanks over 5 cubic feet capacity of 250 psi shall be ASME constructed.

D. Roof Flashing Assemblies: Manufactured assembly made of 4-lb/sq. ft., 0.0625-inch- thick, lead flashing collar and skirt extending at least 8 inches from pipe with galvanized steel boot reinforcement, and counterflashing fitting.

E. Deep-Seal Traps: Cast iron or bronze, with inlet and outlet matching connected piping, cleanout where indicated, and trap seal primer valve connection where indicated.

1. 2-Inch NPS: 4-inch- minimum water seal.
2. 2-1/2 Inch NPS and Larger: 5-inch- minimum water seal.

F. Floor-Drain Inlet Fittings: Cast iron, with threaded inlet and threaded or spigot outlet, and trap seal primer valve connection.

G. Air-Gap Fittings: ASME A112.1.2, cast iron or cast bronze, with fixed air gap, inlet for drain pipe or tube, and threaded or spigot outlet.

H. Stack Flashing Fittings: Counterflashing-type, cast-iron fitting, with bottom recess for terminating roof membrane, and with threaded or hub top for extending vent pipe.

I. Vent Terminals: Commercially manufactured, shop-fabricated or field-fabricated, frost-proof assembly constructed of galvanized steel, copper, or lead-coated copper. Size to provide 1-inch enclosed air space between outside of pipe and inside of flashing collar extension, with counterflashing, as indicated.

## PART 3 - EXECUTION

### 3.1 PLUMBING SPECIALTY INSTALLATION

A. General: Install plumbing specialty components, connections, and devices according to manufacturer's written instructions.

B. Install backflow preventers of type, size, and capacity indicated, at each water-supply connection to mechanical equipment and systems, and to other equipment and water systems as indicated. Comply with authorities having jurisdiction. Locate backflow preventers in same room as connected equipment. Install air-gap fitting on units with atmospheric-vent connection and pipe relief outlet drain to nearest floor drain. Do not install bypass around backflow preventer.

C. Install pressure regulators with inlet and outlet shutoff valves and balance valve bypass. Install pressure gages on inlet and outlet.

D. Install strainers on supply side of each control valve, pressure regulator, and solenoid valve, and where indicated.

E. Install trap seal primer valves with valve outlet piping pitched down toward drain trap a minimum of one percent and connect to floor-drain body, trap, or inlet fitting. Adjust valve for proper flow.

F. Install backwater valves in building drain piping as required to prevent sewer backup. For interior installation, provide cleanout deck plate flush with floor and centered over backwater valve cover, and of adequate size to remove valve cover for servicing.

G. Install cleanouts in aboveground piping and building drain piping as indicated, and where not indicated, according to the following:

1. Size same as drainage piping up to 4-inch NPS. Use 4-inch NPS for larger drainage piping unless larger cleanout is indicated.
2. Locate at each change in direction of piping greater than 45 degrees.
3. Locate at minimum intervals of 50 feet for piping 4-inch NPS and smaller and 100 feet for larger piping.
4. Locate at base of each vertical soil and waste stack.

H. Install cleanout deck plates with top flush with finished floor, for floor cleanouts for piping below floors.

I. Install cleanout wall access covers with frame and cover flush with finished wall, for cleanouts located in concealed piping.

J. Install flashing flange and clamping device with each stack and cleanout passing through floors with waterproof membrane.

K. Install vent flashing sleeves on stacks passing through roof. Secure over stack flashing according to manufacturer's written instructions.

L. Install frost-proof vent caps on each vent pipe passing through roof. Maintain 1-inch clearance between vent pipe and roof substrate.

M. Install floor drains at low points of surface areas to be drained. Set grates of drains flush with finished floor or as indicated. Size outlets as indicated.

N. Install individual traps for floor drains connected to sanitary building drain, unless otherwise indicated.

O. Install floor-drain flashing collar or flange so no leakage occurs between drain and adjoining flooring. Maintain integrity of waterproof membranes where penetrated.

P. Position floor drains for easy access and maintenance.

Q. Install interceptors, including trapping, venting, and flow-control fitting, according to authorities having jurisdiction and with clear space for servicing.

R. Install individual stop valve in each water supply to plumbing specialties. Use ball, gate, or globe valve if specific valve is not indicated. Install water-supply stop valves in accessible locations.

S. Install traps on plumbing specialty drain outlets. Omit traps on indirect wastes unless trap is indicated.

T. Locate drainage piping as close as possible to bottom of floor slab supporting fixtures and drains.

U. Install escutcheons at wall, floor, and ceiling penetrations in exposed finished locations and within cabinets and millwork. Use deep-pattern escutcheons if required to conceal protruding pipe fittings.

V. Install water hammer arrestor at each battery of plumbing fixture connections and additionally as required to eliminate water hammer. Locate in easily accessible location.

W. Install flashing on pipes, sleeves, and specialties passing through or embedded in floors and roofs with waterproof membrane.

## 3.2 CONNECTIONS

A. Piping installation requirements are specified in other Division 22 Sections. Drawings indicate general arrangement of piping, fittings, and specialties.

B. Arrange for electric-power connections to plumbing specialties and devices that require power. Electric power, wiring, and disconnect switches are specified in Division 16 Sections.

C. Supply Runouts to Plumbing Specialties: Install hot- and cold-water-supply piping of sizes indicated, but not smaller than required by authorities having jurisdiction

D. Drainage Runouts to Plumbing Specialties: Install drainage and vent piping, with approved trap, of sizes indicated, but not smaller than required by authorities having jurisdiction.

## 3.3 START-UP

A. Before startup, perform the following checks:

1. System tests are complete.
2. Damaged and defective specialties and accessories have been replaced or repaired.
3. Clear space is provided for servicing specialties.

B. Before operating systems, perform the following steps:

1. Close drain valves, hydrants, and hose bibbs.
2. Open general-duty valves to fully open position.
3. Remove and clean strainers.
4. Verify that drainage and vent piping are clear of obstructions. Flush with water until clear.

C. Startup Procedures: Follow manufacturer's written instructions. If no procedures are prescribed by manufacturer, energize circuits for electrically operated units. Start and run units through complete sequence of operations.

D. Adjust operation and correct deficiencies discovered during commissioning.

## 3.4 PROTECTION

A. Protect drains during remainder of construction period to avoid clogging with dirt and debris and to prevent damage from traffic and construction work.

B. Place plugs in ends of uncompleted piping at end of each day or when work stops.

## 3.5 DEMONSTRATION

A. Engage a factory-authorized service representative to train Owner’s maintenance personnel to adjust, operate, and maintain, plumbing specialties.

**END OF SECTION 221319**

**SECTION 223300 – DOMESTIC WATER HEATERS**

PART 1 - GENERAL

1.1 RELATED DOCUMENTS

A. Drawings and general provisions of the Contract, including General and Supplementary Conditions and Division 1 Specification Sections, apply to this Section.

1.2 SUMMARY

A. This Section includes the following electric water heaters:

1. Light-commercial electric water heaters.
2. Compression tanks.
3. Water heater accessories.

1.3 SUBMITTALS

A. Product Data: For each type and size of water heater indicated. Include rated capacities, operating characteristics, furnished specialties, and accessories.

B. Shop Drawings: Diagram power, signal, and control wiring.

C. Operation and Maintenance Data: For electric water heaters to include in operation and maintenance manuals.

D. Warranty: Special warranty specified in this Section.

E. See “Submittal Schedule” located at the end of Section 220100 – General Mechanical Requirements.

1.4 QUALITY ASSURANCE

A. Source Limitations: Obtain same type of water heaters through one source from a single manufacturer.

B. Product Options: Drawings indicate size, profiles, and dimensional requirements of electric water heaters and are based on the specific system indicated. Refer to Division 1 Section "Product Requirements."

C. Electrical Components, Devices, and Accessories: Listed and labeled as defined in NFPA 70, Article 100, by a testing agency acceptable to authorities having jurisdiction, and marked for intended use.

D. ASME Compliance: Where indicated, fabricate and label commercial water heater storage tanks to comply with ASME Boiler and Pressure Vessel Code: Section VIII, Division 1.

E. Comply with NSF 61, "Drinking Water System Components - Health Effects; Sections 1 through 9," for all components that will be in contact with potable water.

F. ASHRAE Standards: Comply with performance efficiencies prescribed for the following:

1. ASHRAE 90.1, "Energy Efficient Design of New Buildings except Low-Rise Residential Buildings," for commercial water heaters.
2. ASHRAE 90.2, "Energy Efficient Design of New Low-Rise Residential Buildings," for household water heaters.

1.5 WARRANTY

A. Special Warranty: Manufacturer's standard form in which manufacturer agrees to repair or replace components of electric water heaters that fail in materials or workmanship within specified warranty period.

1. Failures include, but are not limited to, the following:

a. Structural failures including storage tank and supports.
b. Faulty operation of controls.
c. Deterioration of metals, metal finishes, and other materials beyond normal use.

2. Warranty Period(s): From date of Substantial Completion:

a. Electric Water Heaters:

1) Storage Tank: Three years.
2) Controls and Other Components: Three years.

b. Compression Tanks: One year.

PART 2 - PRODUCTS

2.1 MANUFACTURERS

A. In other Part 2 articles where titles below introduce lists, the following requirements apply to product selection:

1. Manufacturers: Subject to compliance with requirements, provide products by one of the manufacturers specified.

2.2 LIGHT-COMMERCIAL ELECTRIC WATER HEATERS

A. Description: Comply with UL 174 for household, storage electric water heaters.

1. Manufacturers:

a. American Water Heater Company.
b. Bradford White Corporation.
c. Electric Heater Company (The); Hubbell Heaters Division.
d. GSW Water Heating Company.
e. Heat Transfer Products, Inc.
f. Lochinvar Corporation.
g. Rheem Water Heater Div.; Rheem Manufacturing Company.

h. Ruud Water Heater Div.; Rheem Manufacturing Company.
i. Smith, A. O. Water Products Company.
j. State Industries, Inc.

2. Storage-Tank Construction: Steel, vertical arrangement.

a. Tappings: ASME B1.20.1 pipe thread.
b. Pressure Rating: 150 psig.
c. Interior Finish: Comply with NSF 61 barrier materials for potable-water tank linings, including extending lining material into tappings.

3. Factory-Installed Storage-Tank Appurtenances:

a. Anode Rod: Replaceable magnesium.
b. Dip Tube: Provide unless cold-water inlet is near bottom of tank.
c. Drain Valve: ASSE 1005.
d. Insulation: Comply with ASHRAE/IESNA 90.1 or ASHRAE 90.2.
e. Jacket: Steel with enameled finish.
f. Heat Trap Fittings: Inlet type in cold-water inlet and outlet type in hot-water outlet.
g. Heating Elements: Screw-in immersion type; wired for simultaneous or non-simultaneous operation as indicated on drawings.
h. Temperature Control: Adjustable thermostat for each element.
i. Safety Control: High-temperature-limit cutoff device or system.
j. Relief Valve: ASME rated and stamped and complying with ASME PTC 25.3 for combination temperature and pressure relief valves. Include relieving capacity at least as great as heat input, and include pressure setting less than water heater working-pressure rating. Select relief valve with sensing element that extends into storage tank.

## 2.3 COMPRESSION TANKS

A. Description: Steel pressure-rated tank constructed with welded joints and factory-installed butyl-rubber diaphragm. Include air precharge to minimum system-operating pressure at tank.

1. Manufacturers:

a. AMTROL Inc.
b. Armstrong Pumps, Inc.
c. Flexcon Industries.
d. Honeywell Sparco.
e. Myers, F. E.; Pentair Pump Group (The).
f. Smith, A. O.; Aqua-Air Div.
g. State Industries, Inc.
h. Taco, Inc.
i. Watts Regulator Co.
j. Wessels Co.

2. Construction:

a. Tappings: Factory-fabricated steel, welded to tank before testing and labeling. Include ASME B1.20.1, pipe thread.
b. Interior Finish: Comply with NSF 61 barrier materials for potable-water tank linings, including extending finish into and through tank fittings and outlets.
c. Air-Charging Valve: Factory installed.

## 2.4 WATER HEATER ACCESSORIES

A. Combination Temperature and Pressure Relief Valves: ASME rated and stamped and complying with ASME PTC 25.3. Include relieving capacity at least as great as heat input, and include pressure setting less than water heater working-pressure rating. Select relief valves with sensing element that extends into storage tank.

# PART 3 - EXECUTION

## 3.1 WATER HEATER INSTALLATION

A. Install water heaters level and plumb, according to layout drawings, original design, and referenced standards. Maintain manufacturer's recommended clearances. Arrange units so controls and devices needing service are accessible.

B. Install combination temperature and pressure relief valves in top portion of storage tanks. Use relief valves with sensing elements that extend into tanks. Extend water-heater relief-valve outlet, with drain piping same as domestic water piping in continuous downward pitch, and discharge by positive air gap onto closest floor drain.

C. Install water-heater drain piping as indirect waste to spill by positive air gap into open drains or over floor drains. Install hose-end drain valves at low points in water piping for water heaters that do not have tank drains.

D. Fill water heaters with water.

E. Charge compression tanks with air.

## 3.2 CONNECTIONS

A. Piping installation requirements are specified in other Division 22 Sections. Drawings indicate general arrangement of piping, fittings, and specialties.

B. Install piping adjacent to water heaters to allow service and maintenance. Arrange piping for easy removal of water heaters.

C. Connect hot- and cold-water piping with shutoff valves and unions. Connect hot-water-circulating piping with shutoff valve, check valve, and union.

D. Make connections with dielectric fittings where piping is made of dissimilar metal.

## 3.3 FIELD QUALITY CONTROL

A. Perform startup service per manufacturer’s recommendations.

B. In addition to manufacturer's written installation and startup checks, perform the following:

1. Test and adjust controls and safeties. Replace damaged and malfunctioning controls and equipment.
2. Verify that piping system tests are complete.
3. Check for piping connection leaks.

4. Check for clear relief valve inlets, outlets, and drain piping.
5. Test operation of safety controls, relief valves, and devices.
6. Adjust hot-water-outlet temperature settings. Do not set above 140 deg F unless piping system application requires higher temperature.

3.4 DEMONSTRATION

A. Train Owner's maintenance personnel to adjust, operate, and maintain water heaters.

1. Train Owner's maintenance personnel on procedures for starting and stopping, troubleshooting, servicing, and maintaining equipment.
2. Review data in maintenance manuals.
3. Schedule training with Owner, through Architect, with at least seven days' advance notice.

**END OF SECTION 223300**

**SECTION 224000 - PLUMBING FIXTURES**

PART 1 - GENERAL

1.1 RELATED DOCUMENTS

A. Drawings and general provisions of the Contract, including General and Supplementary Conditions and Division 1 Specification Sections, apply to this Section.

1.2 SUMMARY

A. This Section includes plumbing fixtures and trim, faucets, other fittings, and related components.

1.3 DEFINITIONS

A. Accessible: Plumbing fixture, building, facility, or portion thereof that can be approached, entered, and used by physically handicapped, disabled, and elderly people.

1.4 SUBMITTALS

A. Product Data for each plumbing fixture category and type specified. Include selected fixture, trim, fittings, accessories, appliances, appurtenances, equipment, and supports. Indicate materials and finishes, dimensions, construction details, and flow-control rates.

B. Wiring diagrams from manufacturer for electrically operated units.

C. Maintenance data for plumbing fixtures and components to include in the operation and maintenance manuals.

1.5 QUALITY ASSURANCE

A. Regulatory Requirements: Comply with requirements of CABO A117.1, "Accessible and Usable Buildings and Facilities"; Public Law 90-480, "Architectural Barriers Act"; and Public Law 101-336, "Americans with Disabilities Act"; regarding plumbing fixtures for physically handicapped people.

B. Energy Policy Act Requirements: Comply with requirements of Public Law 102-486, "Energy Policy Act," regarding water flow rate and water consumption of plumbing fixtures.

C. Select combinations of fixtures and trim, faucets, fittings, and other components that are compatible.

1.6 EXTRA MATERIALS

A. Repair kits complete with all necessary washers, springs, pins, retainers, packings, O-rings, sleeves and seats: Furnish quantity of identical units not less than 5 percent of each type and size installed.

PART 2 - PRODUCTS

2.1 MANUFACTURERS

A. Manufacturers: Subject to compliance with requirements, provide products by one of the following:

1. Vitreous-China and Enameled Fixtures:

   a. Kohler Co.
   b. American Standard, Inc.
   c. Briggs Industries, Inc.
   d. ProFlo (Manufactured by Briggs, supplied by Ferguson)
   e. Crane Plumbing.
   f. Eljer Industries.
   g. Gerber Plumbing Fixtures Corp.
   h. Mansfield Plumbing Products, Inc.
   i. Universal-Rundle Corp.

2. Flushometer Valves:

   a. Sloan Valve Co
   b. Coyne & Delany Co.
   c. TOTO KIKI USA, Inc.
   d. Zurn Industries, Inc.; Flush Valve Operations.

3. Toilet Seats:

   a. American Standard, Inc.
   b. Bemis Mfg. Co.
   c. Centoco Manufacturing Corp.
   d. Church Seat Co.
   e. Eljer Industries.
   f. Kohler Co.
   g. Olsonite Corp.
   h. Sanderson Plumbing Products, Inc.; Beneke Industries, Ltd.
   i. Sperzel.

4. Supply Fittings and Faucets:

   a. American Standard, Inc.
   b. Chicago Faucet Co.
   c. Crane Plumbing.
   d. Eljer Industries.
   e. Kohler Co.
   f. Masco Canada, Ltd.; Cambridge Brass Div.
   g. Masco Corp.; Delta Faucet Co.
   h. Moen, Inc.
   i. Price Pfister, Inc.
   j. Symmons Industries, Inc.
   k. T & S Brass and Bronze Works, Inc.
   l. Zurn Industries, Inc.

5. Stainless-Steel Sinks:

   a. Elkay Manufacturing Co.
   b. Just Manufacturing Co.
   c. Kohler Co.
   d. Moen, Inc.

6. Disposers:

   a. Emerson Electric Co.; In-Sink-Erator Div.
   b. General Electric Co.; GE Answer Center.
   c. Kitchen Aid, Inc.
   d. Maytag Co.
   e. Waste King, Inc.
   f. White Consolidated Industries, Inc.; Major Appliance Group.

7. Fitting Insulation Kit:

   a. Brocar Products, Inc.
   b. Engineered Brass Co.
   c. McGuire Manufacturing Co., Inc.
   d. Plumberex Specialty Products.
   e. TCI Products.
   f. TRUEBRO, Inc.

8. Mop-Sinks and Basins:

   a. Fiat Products, Inc.
   b. Stern-Williams Co., Inc.
   c. Aqua Glass Corp.
   d. Mustee: E.L. Mustee & Sons, Inc.

9. Fixture Carriers

   a. J. R. Smith
   b. Josam
   c. Zurn
   d. Wade
   e. Acorn

## 2.2 FITTINGS

A. Fittings for Plumbing Fixtures: Refer to plumbing fixture schedules at the end of this Section for materials for supplies, supply stops, supply risers, traps, and other fittings.

1. Supply Inlets: Brass pipe or copper tube, size required for final connection.
2. Supply Stops: Chrome-plated brass, angle or straight; compression, wheel-handle or loose-key type; same size as supply inlet and with outlet matching supply riser.
3. Supply Risers: flexible copper tube with knob end. Use chrome-plated tube for exposed applications.
4. Traps: Tubular brass with 0.045-inch wall thickness, slip-joint inlet, cleanout, wall flange, escutcheons, and size to match equipment. Use chrome-plated tube for exposed applications.
5. Continuous Waste: Tubular brass, 0.045-inch wall thickness, with slip-joint inlet, and size to match equipment.

6. Indirect Waste: Tubular brass, 0.045-inch wall thickness, and size to match equipment.

PART 3 - EXECUTION

3.1 EXAMINATION

A. Examine roughing-in for potable, hot- and cold-water supply piping systems; soil, waste, and vent piping systems; and supports. Verify that locations and sizes of piping and locations and types of supports match those indicated, before installing and connecting fixtures. Use manufacturer's roughing-in data when roughing-in data are not indicated.

3.2 APPLICATIONS

A. Include supports for plumbing fixtures according to the following:

1. Carriers: For wall-hanging water closets and fixtures supported from wall construction.
2. Chair Carriers: For wall-hanging urinals, lavatories, sinks, drinking fountains, and electric water coolers.
3. Heavy-Duty Chair Carriers: For accessible urinals, lavatories, and other fixtures where indicated.

B. Include fitting insulation kits for accessible fixtures according to the following:

1. Lavatories: Cover hot- and cold-water supplies, stops and handles, drain, trap, and waste to wall.
2. Sinks: Cover hot- and cold-water supplies, stops and handles, drain, trap, and waste to wall.
3. Other Fixtures: Cover exposed fittings below fixture.

3.3 PLUMBING FIXTURE INSTALLATION

A. Field Measurements: Coordinate roughing-in and final fixture locations and verify that plumbing fixtures can be installed to comply with original design and referenced standards.

B. Assemble plumbing fixtures and trim, fittings, faucets, and other components according to manufacturers' written instructions.

C. Install fixtures level and plumb according to manufacturers' written instructions, roughing-in drawings, and referenced standards.

D. Install floor-mounted, floor-outlet water closets with closet flanges and gasket seals.

E. Install wall hanging, back-outlet water closets with support manufacturer's tiling frame or setting gage.

F. Install toilet seats on water closets.

G. Install wall hanging, back-outlet urinals with gasket seals.

H. Install flushometer valves for accessible water closets and urinals with handle mounted on wide side of compartment. Install other actuators in locations that are easy for handicapped people to reach.

I. Install tanks for accessible, tank-type water closets with lever handle mounted on wide side of compartment.

J. Fasten wall-hanging plumbing fixtures securely to supports attached to building substrate when supports are specified, and to building wall construction where no support is indicated.

K. Fasten floor-mounted fixtures to substrate. Fasten fixtures having holes for securing fixture to wall construction, to reinforcement built into walls.

L. Fasten recessed, wall-mounted fittings to reinforcement built into walls.

M. Fasten wall-mounted fittings to reinforcement built into walls.

N. Fasten counter-mounting plumbing fixtures to casework.

O. Secure supplies to supports or substrate within pipe space behind fixture.

P. Set shower receptors and mop basins in leveling bed of cement grout.

Q. Install individual stop valve in each water supply to fixture. Use gate or globe valve where specific stop valve is not specified.

1. Exception: Omit stop valves on supplies to emergency equipment, except when permitted by authorities having jurisdiction. When permitted, install valve chained and locked in OPEN position.

R. Install water supply stop valves in accessible locations.

S. Install faucet, laminar-flow fittings with specified flow rates and patterns in faucet spouts when faucets are not available with required rates and patterns. Include adapters when required.

T. Install supply, flow-control fittings with specified flow rates in fixture supplies at stop valves.

U. Install faucet, flow-control fittings with specified flow rates and patterns in faucet spouts when faucets are not available with required rates and patterns. Include adapters when required.

V. Install shower, flow-control fittings with specified maximum flow rates in shower arms.

W. Install traps on fixture outlets. Omit traps on fixtures having integral traps. Omit traps on indirect wastes, except where otherwise indicated.

X. Install disposers in sink outlets. Install switch where indicated, or in wall adjacent to sink if location is not indicated.

Y. Install hot-water dispensers in back top surface of sink or in counter with spout over sink.

Z. Install escutcheons at wall, floor, and ceiling penetrations in exposed, finished locations and within cabinets and millwork. Use deep-pattern escutcheons where required to conceal protruding pipe fittings.

AA. Seal joints between fixtures and walls, floors, and counters using sanitary-type, 1-part, mildew-resistant, silicone sealant. Match sealant color to fixture color.

## 3.4 CONNECTIONS

A. Supply and Waste Connections to Plumbing Fixtures: Refer to plumbing fixture schedules at the end of this Section for fitting sizes and connection requirements for each plumbing fixture. Install hot- and cold-water-supply, waste and vent piping of sizes indicated, but not smaller than required by authorities having jurisdiction.

## 3.5 FIELD QUALITY CONTROL

A. Check that fixtures are complete with trim, faucets, fittings, and other specified components.

B. Inspect installed fixtures for damage. Replace damaged fixtures and components.

C. Test installed fixtures after water systems are pressurized and demonstrate proper operation. Replace malfunctioning fixtures and components, then retest. Repeat procedure until units operate properly.

## 3.6 ADJUSTING AND CLEANING

A. Operate and adjust faucets and controls. Replace damaged and malfunctioning fixtures, fittings, and controls.

B. Operate and adjust disposers, hot-water dispensers, and controls. Replace damaged and malfunctioning units and controls.

C. Adjust water pressure at drinking fountains, electric water coolers, faucets, shower valves, and flushometer valves having controls, to produce proper flow and stream.

D. Replace washers and seals of leaking and dripping faucets and stops.

E. Clean fixtures, faucets, and other fittings with manufacturers' recommended cleaning methods and materials.

## 3.7 PROTECTION

A. Provide protective covering for installed fixtures and fittings.

B. Do not allow use of fixtures for temporary facilities, except when approved in writing by Owner.

## 3.8 WATER CLOSET SCHEDULE

A. Water Closet WC-1 (Accessible): See Plumbing Fixture Schedule on Drawings

1. Fixture Color: White.
2. Bowl Type and Operation: Elongated, siphon jet.
3. Mounting and Outlet: Floor mounted, floor outlet.
4. Rim Height: 17.5 to 18 inches
5. Design Water Consumption: 1.6 gal. per flushing cycle
6. Flushometer Valve: Diaphragm operation, cast-brass body, brass or copper pipe or tubing inlet with wall flange and tailpiece with spud, screwdriver check stop, and vacuum breaker. Polished, chrome-plated, exposed metal parts.
7. Toilet Seat: White Elongated, open front without cover Solid-plastic, water-closet seat with bumpers and hardware, compatible with water closet

## 3.9 LAVATORY SCHEDULE

A. Lavatory L-1 (accessible): See Plumbing Fixture Schedule on Drawings

1. Supply Inlets: 1/2-inch NPS.

2. Supply Stops: Angle or straight, compression, wheel-handle type, same size as supply inlet.
3. Supply Risers: 3/8-inch NPS flexible.
4. Drain: Grid strainer with 1-1/4-inch NPS tailpiece
5. Trap: 1-1/4-inch NPS. Use offset trap if required for ADA Compliance.
6. Fixture Support: Stud walls; Concealed arm; vertically adjustable, lavatory, chair carrier with steel-pipe upright members; and feet. Other walls; Concealed arm; vertically adjustable, steel plates with through-wall bolts
7. Supply Insulation Kit: Molded, soft-plastic covering for supplies from wall to fixture with removable covering for stops and handles. Include manufacturer's standard fasteners, straps, and adhesives.
8. Drain Insulation Kit: Molded, soft-plastic covering for drain piping from fixture to wall. Shaped, cushioned-jacket plastic covering with self-sticking fastening system for drain piping and trap. Include manufacturer's standard fasteners, straps, and adhesives.

## 3.10 SINK SCHEDULE

A. Sink S-1: See Plumbing Fixture Schedule on Drawings

1. Supply Inlets: 1/2-inch NPS.
2. Supply Stops: Angle or straight, compression, wheel-handle type, same size as supply inlet.
3. Supply Risers: 3/8-inch NPS flexible with knob end.
4. Drain: 1-1/2-inch grid strainer with 3-1/2-inch removable, stainless-steel crumb cup with 1-1/2-inch NPS tubular-brass tailpiece.
5. Trap: 1-1/2-inch NPS, Tubular brass with 0.045-inch wall thickness, slip-joint inlet, cleanout, wall flange, escutcheons. Use chrome-plated tube for exposed applications.

B. Sink S-2: See Plumbing Fixture Schedule on Drawings

1. Supply Inlets: 1/2-inch NPS.
2. Supply Stops: Angle or straight, compression, wheel-handle type, same size as supply inlet.
3. Supply Risers: 3/8-inch NPS flexible with knob end.
4. Drain: 1-1/2-inch grid strainer with 3-1/2-inch removable, stainless-steel crumb cup with 1-1/2-inch NPS tubular-brass tailpiece.
5. Trap: 1-1/2-inch NPS, Tubular brass with 0.045-inch wall thickness, slip-joint inlet, cleanout, wall flange, escutcheons. Use chrome-plated tube for exposed applications.

C. Sink S-3: Surgeon’s Scrub Sink VSSI Model No. 106-1133-10, VSSI Faucet Model No. 107-4292-00, VSSI Foot Action Faucet Valve Model No. 107-3392-00 See Plumbing Notes on Drawing M2.1, Sheet 23 of 32

1. Foot Action Valve Supply Inlets: 1/2-inch NPS.
2. Gooseneck Faucet Supply Inlet: 1/2-inch NPS.
3. Supply Stops: Angle or straight, compression, wheel-handle type, same size as supply inlet
4. Drain: 3-1/2-inch strainer basket with 1-1/4-inch drain pipe.

D. Sink S-4: Animal Wash Tub VSSI Model No. 105-0446-10, VSSI Spray Faucet Model No. 107-1112-02 See Plumbing Notes on Drawing M2.1, Sheet 23 of 32

1. Spray Faucet Supply Inlets: 1/2-inch NPS.
2. Supply Stops: Angle or straight, compression, wheel-handle type, same size as supply inlet .
3. Drain: 3-1/2-inch strainer basket with 1-1/4-inch drain pipe.
4. Sprayer: Deck mounted 72” hose and sprayer attachment

5. Accessories: With backsplash and ramp

3.11 MOP SINK SCHEDULE

A. Mop-Sink MS-1: See Plumbing Fixture Schedule on Drawings

1. Wall Brace: Assembly with wall bracket and support to faucet spout.
2. Drain: 3-inch NPS with grid strainer.
3. P-Trap: 3-inch NPS drainage piping.

**END OF SECTION 224000**

# SECTION 230100 – GENERAL MECHANICAL REQUIREMENTS

## PART 1 - GENERAL

### 1.1 RELATED DOCUMENTS

A. Drawings and general provisions of the Contract, including General and Supplementary Conditions apply to this Section.

### 1.2 SUMMARY

A. This Section includes general mechanical requirements and shall apply to all phases of the work specified, indicated on the drawings or required to provide for complete installation of mechanical systems.

### 1.3 WARRANTIES

A. All materials, workmanship and equipment shall be warranted against defects or against injury from proper and usual wear for a period of one year after the date of substantial completion. Any item which becomes defective within the warranty period shall be repaired or replaced, at no additional cost to the Owner.

B. All manufacture's warranties shall run to the benefit of the owner. No manufacturer's warranties shall be voided or impaired.

C. Warranty shall include repair of faulty workmanship.

### 1.4 ALTERNATES

A. Alternates, if required, shall be as described in the "Alternates" section of this specification, as described on the proposal form of as indicated on the drawings.

### 1.5 INTERPRETATION OF DOCUMENTS

A. Any questions regarding the meaning of any portion of the contract documents shall be submitted to the Architect/Engineer for interpretation. Definitive interpretations or clarification will be published by addenda or supplemental information. Verbal interpretation not issued by addendum or supplemental information shall not be considered part of the contract documents.

B. The Architect/Engineer shall be the sole judge of interpretations of discrepancies within the contract documents.

C. If ambiguities should appear in the contract documents, the Contractor shall request clarification from the Architect/Engineer before proceeding with the work. If the Contractor fails to make such request, no excuse will thereafter be entertained for failure to carry out the work in a manner satisfactory to the Architect/Engineer. Should a conflict occur within the contract documents, the Contractor is deemed to have estimated the more expensive way of doing the work unless a written clarification from the Architect/Engineer was requested and obtained before submission of proposed methods or materials.

1.6 DEFINITIONS ABREVIATIONS

A. The following shall apply throughout the contract documents

| | | |
|---|---|---|
| 1. | Code | All applicable national state and local codes |
| 2. | Furnish | Supply and deliver to site ready for installation |
| 3. | Indicated | Noted, scheduled or specified |
| 4. | Provide | Furnish, install and connect complete and ready for final use by owner |
| 5. | ADA | Americans with Disabilities Act |
| 6. | ANSI | American National Standards Institute |
| 7. | ARI | Air-Conditioning and Refrigeration Institute |
| 8. | ASHRAE | American Society of Heating, Refrigerating and Air-Conditioning Engineers |
| 9. | ASME | American Society of Mechanical Engineers |
| 10. | ASTM | American Society for Testing and Materials |
| 11. | FM | Factory Mutual System |
| 12. | IRI | HSB Industrial Risk Insurers |
| 13. | NEC | National Electric Code (NFPA 70) |
| 14. | NEMA | National Electrical Manufacturers Association |
| 15. | NFPA | National Fire Protection Association |
| 16. | SMACNA | Sheet Metal and Air Conditioning Contractors' National Association |
| 17. | UL | Underwriters Laboratories Inc. |

1.7 CODES AND STANDARDS

A. All work shall be performed by competent craftsmen skilled in the trade involved and shall be done in a manner consistent with normal industry standards.

B. All work shall conform to the currently adopted editions of Electric Code, Building Code, Mechanical Code Plumbing Code, Unified Facilities Criteria (UFC) and all other applicable Offutt Air Force Base codes or standards.

C. Where there is a conflict between the code and the contract documents, the code shall have precedence only then it is more stringent than the contract documents. Items that are allowed by the code but are less stringent than those specified shall not be substituted.

1.8 PERMITS

A. Contractor shall become familiar and comply with all requirements regarding permits, fees, licenses, etc. All permits, licenses, inspections and arrangements required for the work shall be obtained by Contractor's effort and expense. All utilities shall be installed in accordance with the local rules and regulations and all charges shall be paid by the Contractor.

1.9 OPERATION AND MAINTENANCE MANUALS

A. Assemble (3) complete sets of operation and maintenance data indicating the operation and maintenance of each system, subsystem, and piece of equipment not part of a system. Include operation and maintenance data required in individual Specification Sections and as follows:

1. Operation Data:

a. Emergency instructions and procedures.
b. System, subsystem, and equipment descriptions, including operating standards.
c. Operating procedures, including startup, shutdown, seasonal, and weekend operations.
d. Description of controls and sequence of operations.
e. Piping and wiring diagrams.

2. Maintenance Data:

a. Manufacturer's information, including list of spare parts.
b. Name, address, and telephone number of installer or supplier.
c. Maintenance procedures.
d. Maintenance and service schedules for preventive and routine maintenance.
e. Maintenance record forms.
f. Sources of spare parts and maintenance materials.
g. Copies of maintenance service agreements.
h. Copies of warranties and bonds.

B. Organize operation and maintenance manuals into suitable sets of manageable size. Bind and index data in heavy-duty, 3-ring, vinyl-covered, loose-leaf binders, in thickness necessary to accommodate contents, with pocket inside the covers to receive folded oversized sheets. Identify each binder on front and spine with the printed title "OPERATION AND MAINTENANCE MANUAL," Project name, and subject matter of contents.

1.10 PROJECT RECORD DOCUMENTS

A. Record Drawings: Maintain and submit one set of blue- or black-line white prints of Contract Drawings and Shop Drawings.

1. Mark Record Prints to show the actual installation where installation varies from that shown originally.
2. Mark record sets with erasable, red-colored pencil. Use other colors to distinguish between changes for different categories of the Work at the same location.
3. Mark important additional information that was either shown schematically or omitted from original Drawings.
4. Note Construction Change Directive numbers, Change Order numbers, alternate numbers, and similar identification where applicable.
5. Identify and date each Record Drawing; include the designation "PROJECT RECORD DRAWING" in a prominent location.

B. Record Specifications: Submit one copy of Project's Specifications, including addenda and contract modifications. Mark copy to indicate the actual product installation where installation varies from that indicated in Specifications, addenda, and contract modifications.

C. Record Product Data: Submit one copy of each Product Data submittal. Mark one set to indicate the actual product installation where installation varies substantially from that indicated in Product Data.

## PART 2 - PRODUCTS

### 2.1 MATERIALS

A. All materials and equipment used in the construction of the project shall be new unused and undamaged unless otherwise specified. Materials and equipment shall be of latest design standards of manufacturer specified.

B. Materials and equipment are limited by the requirements of the contract documents. Material and equipment shall be provided in accordance with the following:

1. Basis of Design Products: Basis of Design Products are those products around which the project was designed in terms of capacity, performance, physical size and quality. Basis of Design Products shall be provided unless substitutions are made in accordance with this specification.

2. Substitutions: Substitutions are product of manufacturers other than listed as Basis of Design. Substitutions shall meet each of the following requirements:

a. The product shall be manufactured by one of the acceptable manufacturers listed in the contract documents.

b. The product shall meet or exceed the requirements of the contract documents in terms of quality, performance, suitability, appearance and characteristics.

c. The contractor providing the substitution shall bear the total cost of all changes due to substitutions. These may include but are not limited to redesign costs and increased work by other contractors or the owner.

d. The Architect/Engineer shall be the sole judge of the suitability of the substation items.

C. Verify installation details and requirements for materials and equipment furnished by others and installed under this contract.

## PART 3 - EXECUTION

### 3.1 DEMONSTRATION AND TRAINING

A. Instruction: Instruct Owner's personnel to adjust, operate, and maintain systems, subsystems, and equipment not part of a system.

1. Provide instructors experienced in operation and maintenance procedures.
2. Provide instruction at mutually agreed-on times. For equipment that requires seasonal operation, provide similar instruction at the start of each season.

3. Schedule training with Owner and Architect/Engineer with at least seven days' advance notice.

B. Program Structure. Include instruction for the following:

1. System design and operational philosophy.
2. Review of documentation.
3. Operations.
4. Adjustments.
5. Troubleshooting.
6. Maintenance.
7. Safety.

3.2 STARTING AND ADJUSTING

A. Start and test all equipment and operating components to confirm proper operation. Test and adjust all systems to achieve designed capacity and performance.

B. Provide three (3) copies of all test report to the Architect/Engineer for review prior to date of substantial completion.

C. All equipment and systems discrepancies shall be corrected prior to final acceptance.

**END OF SECTION 230100**

# SECTION 230500 – BASIC MECHANICAL MATERIALS AND METHODS

## PART 1 - GENERAL

### 1.1 RELATED DOCUMENTS

A. Drawings and general provisions of the Contract, including General and Supplementary Conditions and Division 1 Specification Sections, apply to this Section.

### 1.2 SUMMARY

A. This Section includes the following basic mechanical materials and methods and shall apply to all phases of the work specified, indicated on the drawings or required to provide for complete installation of mechanical systems.

1. Indenting Devices and Labels
2. Grout
3. Sealants
4. Access Doors
5. Electrical Requirements
6. Motors
7. Mechanical Equipment Installation
8. Labeling and Identifying
9. Construction Layout
10. Data and Measurements

### 1.3 DEFINITIONS

A. Finished Spaces: Spaces other than mechanical and electrical equipment rooms, furred spaces, pipe and duct shafts, unheated spaces immediately below roof, spaces above ceilings, unexcavated spaces, crawl spaces, and tunnels.

B. Exposed, Interior Installations: Exposed to view indoors. Examples include finished occupied spaces and mechanical equipment rooms.

C. Exposed, Exterior Installations: Exposed to view outdoors, or subject to outdoor ambient temperatures and weather conditions. Examples include rooftop locations.

D. Concealed, Interior Installations: Concealed from view and protected from physical contact by building occupants. Examples include above ceilings and in duct shafts.

E. Concealed, Exterior Installations: Concealed from view and protected from weather conditions and physical contact by building occupants, but subject to outdoor ambient temperatures. Examples include installations within unheated shelters.

### 1.4 SUBMITTALS

A. Product Data: For sealants and identification materials and devices.

B. Shop Drawings: Detail fabrication and installation for metal and wood supports and anchorage for mechanical materials and equipment.

1.5 QUALITY ASSURANCE

A. Comply with ASME A13.1 for lettering size, length of color field, colors, and viewing angles of identification devices.

B. Equipment Selection: Equipment of higher electrical characteristics, physical dimensions, capacities, and ratings may be furnished provided such proposed equipment is approved in writing and connecting mechanical and electrical services, circuit breakers, conduit, motors, bases, and equipment spaces are increased. Additional costs shall be approved in advance by appropriate Contract Modification for these increases. If minimum energy ratings or efficiencies of equipment are specified, equipment must meet design and commissioning requirements.

1.6 DELIVERY, STORAGE, AND HANDLING

A. Each contractor shall make provisions for delivery and safe storage of materials. Materials shall be delivered in a timely manner to expedite the work.

B. Protect stored piping, supplies and equipment from cold, moisture and dirt. Elevate above grade. Do not exceed structural capacity of floor, if stored inside.

1.7 COORDINATION

A. Coordinate mechanical equipment installation with other building components.

B. Arrange for pipe, duct and equipment spaces, chases, slots, and openings in building structure during progress of construction to allow for mechanical installations.

C. Coordinate installation of required supporting devices and set sleeves in poured-in-place concrete and other structural components, as they are constructed.

D. Sequence, coordinate, and integrate installations of mechanical materials and equipment for efficient flow of the Work. Coordinate installation of large equipment requiring positioning before closing in building.

E. Coordinate connection of mechanical systems with exterior underground and overhead utilities and services. Comply with requirements of governing regulations, franchised service companies, and controlling agencies.

F. Coordinate requirements for access panels and doors if mechanical items requiring access are concealed behind finished surfaces.

G. Coordinate installation of identifying devices after completing covering and painting, if devices are applied to surfaces. Install identifying devices before installing acoustical ceilings and similar concealment.

H. Motors, equipment, controls, etc. shall be furnished, mounted and connected according to the following schedule unless otherwise noted (E =Electrical Contractor, M =Mechanical Contractor):

| Item | Furnished By | Set in place or mounted by | Power wiring and connection by | Control Wiring and connection by |
|---|---|---|---|---|
| 1) Equipment Motors | M | M | E | M |
| 2) Magnetic Motor Starters: | | | | |
| a) Automatically controlled, with or without HOA switches. | E | E | E | M |
| b) Automatically controlled, with or without HOA switches and furnished as part of factory-wired mechanical equipment | M | M | E | M |
| c) Manually controlled | E | E | E | --- |
| d) Manually controlled and furnished as part of factory-wired mechanical equipment | M | M | E | --- |
| 3) Disconnect switches, thermal overload switches, manual operating switches | | | | |
| a) Furnished as part of factory wired mechanical equipment | M | M | E | -- |
| b) Loose mounted | E | E | E | -- |
| 4) Transformers | | | | |
| a) Serving 24 Volt control power | M(1) | M | E | M |
| 5) Contactors | E | E | E | E |
| 6) Push-button stations, pilot lights | E | E | E | E |
| 7) Multi-speed switches | | | | |
| a) Furnished with equipment | M | E | E | M |
| 8) Line voltage thermostats and time clocks. | E | E | E | E |
| 9) Low voltage controls and thermostats | M | M | M | M (2) |
| 10) Motorized control valves, damper motors, solenoid valves, etc. | | | | |
| a) Line Voltage | M | M | E | M |
| b) Low Voltage | M | M | M | M |
| 11) Factory pre-wired control/power panels including remote sensing devices | M | M | E | M(3) |
| 12) Electric wall and unit heaters | E | E | E | E |
| 13) Fire protection controls | M | M | E | E |
| 14) Fire Smoke Dampers | | | | |
| a) At air handling unit (24 Volt) | M | M | M | M |
| b) In space (120 Volt) | M | M | E | E(4) |
| 15) Fire and smoke detectors including relays for fan shutdown | E | E | E | E(5) |

Notes:

1. When control power is not available, mechanical contractor shall provide control transformers as required to power all valves, dampers, etc.
2. Conduit rough-in for thermostats by electrical contractor.
3. Fan coil units and heat pumps control wiring including wiring of remote sensors by mechanical. Control circuit feeders by mechanical unless shown otherwise.
4. Smoke dampers will be specified as 115 volt (verify) with wiring by Electrical Contractor and control from the fire alarm panel. Smoke detectors furnished by electrical contractor are required to make dampers operate.
5. Wiring from alarm contacts to alarm system by Electrical; control function wiring by Mechanical.

PART 2 - PRODUCTS

2.1 IDENTIFYING DEVICES AND LABELS

A. General: Manufacturer's standard products of categories and types required for each application as referenced in other Division 23 Sections. If more than one type is specified for application, selection is Installer's option, but provide one selection for each product category.

B. Equipment Nameplates: Metal nameplate with operational data engraved or stamped; permanently fastened to equipment.

1. Data: Manufacturer, product name, model number, serial number, capacity, operating and power characteristics, labels of tested compliances, and similar essential data.
2. Location: Accessible and visible location.

C. Engraved Plastic-Laminate Signs: ASTM D 709, Type I, cellulose, paper-base, phenolic-resin-laminate engraving stock; Grade ES-2, black surface, black phenolic core, with white melamine subcore, unless otherwise indicated.

1. Fabricate in sizes required for message.
2. Engraved with engraver's standard letter style, of sizes and with wording to match equipment identification.

D. Fasteners: Self-tapping stainless-steel screws or contact-type permanent adhesive.

E. Valve Tags: 19 gauge, 1-1/2” diameter, polished brass, stamped or engraved ¼” high piping system abbreviation in and ½” high sequenced valve numbers.

1. Valve tag fastener: solid brass wire link or beaded chain, or ‘S’-hook or size required for proper attachment of tags to valves.

F. Snap-on Plastic Pipe Markers: Manufacturer's standard preprinted, semirigid, snap on, color-coded, complying with ASME A13.1.

G. Pressure-Sensitive Pipe Markers: Manufacturer's standard preprinted, permanent adhesive, color-coded, pressure-sensitive vinyl, complying with ASME A13.1.

H. Lettering and Graphics: Coordinate names, abbreviations, and other designations used in mechanical identification, with corresponding designations indicated. Use numbers, lettering, and wording indicated for proper identification and operation/maintenance of mechanical systems and equipment.

2.2 GROUT

A. Nonshrink, Nonmetallic Grout: ASTM C 1107, Grade B.

1. Characteristics: Post-hardening, volume-adjusting, dry, hydraulic-cement grout, nonstaining, noncorrosive, nongaseous, and recommended for interior and exterior applications.
2. Design Mix: 5000-psig, 28-day compressive strength.
3. Packaging: Premixed and factory packaged.

## 2.3 SEALANTS

A. Polyurethane Sealant: Single component, chemical curing, non-staining, non-bleeding, capable of continuous water immersion, non-sagging for application in vertical and horizontal joints. Color as selected by architect.

B. Accessories: Primer, joint cleaner, joint backing and bond breaker as recommended by sealant manufacturer to suit application.

C. Firestopping Materials: Provide firestopping material to maintain required rating of all fire-resistive assemblies according to requirements of "Firestopping" section of this specification.

## 2.4 ACCESS DOORS

A. Prime Coated 14 gauge steel, flush, with screw driver operated cam lock. Frame to accommodate construction type; size as indicated.

## 2.5 ELECTRICAL REQUIREMENTS

A. Compliance for Mechanical Equipment

1. Comply with applicable requirements of the National Electric Code (NFPA 70)
2. Provide equipment and accessories that are listed and labeled as defined in NFPA 70
3. Comply with applicable requirements of Underwriters Laboratory (UL)
4. Comply with applicable requirements of NEMA standards

B. Electrical Wire

1. Wiring material shall be in accordance with the latest version of the National Electric Code (NFPA 70) and all applicable local codes and carry the UL label where applicable.

2. All exposed wiring in return air plenums shall be rate cable for fire and smoke spread.

## 2.6 MOTORS

A. BASIC MOTOR REQUIREMENTS

1. Motors shall be single phase unless otherwise indicated

2. Frequency Rating shall be 60 Hz. Voltage Rating is determined by voltage of circuit to which motor is connected.

3. Service Factor: According to NEMA MG 1, unless otherwise indicated.

4. Capacity and Torque Characteristics: Rated for continuous duty and sufficient to start, accelerate, and operate connected loads at designated speeds, in indicated environment, with indicated operating sequence, and without exceeding nameplate ratings or considering service factor.

5. Enclosure: Open dripproof, unless otherwise indicated.

B. SINGLE-PHASE MOTORS

1. Permanent-split capacitor, Split-phase start, capacitor run or capacitor start, capacitor run as indicated or selected by manufacturer, to suit starting torque and other requirements of specific motor application.

2. Thermal Protection: Where indicated or required, internal protection automatically opens power supply circuit to motor when winding temperature exceeds a safe value calibrated to temperature rating of motor insulation. Thermal protection device automatically resets when motor temperature returns to normal range, unless otherwise indicated.

3. Bearings: Ball-bearing type for belt-connected motors and other motors with high radial forces on motor shaft. Sealed, prelubricated sleeve bearings for other single-phase motors.

PART 3 - EXECUTION

3.1 MECHANICAL EQUIPMENT INSTALLATION

A. Install equipment to provide maximum possible headroom, if mounting heights are not indicated.

B. Install equipment according to approved submittal data. Portions of the Work are shown only in diagrammatic form. Refer conflicts to Architect.

C. Install equipment level and plumb, parallel and perpendicular to other building systems and components in exposed interior spaces, unless otherwise indicated.

D. Install mechanical equipment to facilitate service, maintenance, and repair or replacement of components. Connect equipment for ease of disconnecting, with minimum interference to other installations. Extend grease fittings to accessible locations.

E. Install equipment giving right of way to piping installed at required slope.

3.2 POSITION OF DEVICES

A. Devices shall be installed at the height indicated below unless otherwise noted. All heights of outlets are measured from finished floor to centerline of device. Locate devices mounted on finish surfaces with regards to furring, trim, etc. Heights may be adjusted as necessary to clear wall mounted cabinets, electrical devices, etc. Where installed in masonry walls, mounting heights may be adjusted to correspond to block coursing. In no case shall devices requiring handicapped accessibility be mounted above 54”.

| | | |
|---|---|---|
| 1. | Thermostats located where side wheelchair accessibility can be achieved | 54” |
| 2. | Thermostats located where front wheelchair accessibility can only be achieved | 48” |
| 3. | Space Sensors (without set point adjustment) | 54” |
| 4. | Temperature Control Panels (not requiring occupant interface) | 60” |

## 3.3 LABELING AND IDENTIFYING

A. Piping Systems: Install pipe markers on each system. Include arrows showing normal direction of flow.

1. Plastic markers, with application systems. Install on insulation segment if required for hot, uninsulated piping.
2. Locate pipe markers as follows if piping is exposed in finished spaces; machine rooms; and accessible maintenance spaces such as shafts, tunnels, plenums; and exterior nonconcealed locations:

   a. Near each valve and control device.
   b. Near each branch, excluding short takeoffs for fixtures and terminal units. Mark each pipe at branch, if flow pattern is not obvious.
   c. Near locations if pipes pass through walls, floors, ceilings, or enter nonaccessible enclosures.
   d. At access doors, manholes, and similar access points that permit view of concealed piping.
   e. Near major equipment items and other points of origination and termination.
   f. Spaced at maximum of 50-foot intervals along each run. Reduce intervals to 25 feet in congested areas of piping and equipment.
   g. On piping above removable acoustical ceilings: omit intermediately spaced markers.

B. Equipment: Install engraved plastic-laminate sign or equipment marker on or near each major item of mechanical equipment.

C. Valve Tags:

1. Install valve tag at all valves in piping systems listed below

   a. Domestic water (excluding individual fixture isolation valves)

2. Provide reproducible set of drawings indicating all valve locations.

D. Adjusting: Relocate identifying devices as necessary for unobstructed view in finished construction.

## 3.4 FIRESTOPPING

A. Apply firestopping to all duct and pipe penetrations of fire-rated floor and wall assemblies to achieve fire-resistance rating of the assembly.

## 3.5 CONCRETE BASES

A. Construct concrete bases of dimensions indicated, but not less than 3-1/2” inches larger in both directions than supported unit. Follow supported equipment manufacturer's setting templates for anchor bolt and tie locations. Use 3000-psig, 28-day compressive-strength concrete and reinforcement

## 3.6 CUTTING AND PATCHING

A. Cut, channel, chase, and drill floors, walls, partitions, ceilings, and other surfaces necessary for mechanical installations. Perform cutting by skilled mechanics of trades involved.

B. Repair cut surfaces to match adjacent surfaces.

3.7 CONSTRUCTION LAYOUT

A. Layout work in advance of installation using data and measurements from the site, the appropriate architectural and structural drawings and shop drawings.

B. Confirm adequate clearance for installation, operation, maintenance and code required clearance including items installed by other contractors.

C. If layout to provide clearance is not possible, promptly notify Architect/Engineer for clarification.

3.8 DATA AND MEASUREMENTS

A. The data given herein and on the drawings is as accurate as could be secured. The existence and location of construction as indicated is not guaranteed. Before beginning work investigate and verify the existence and location of items affecting work. Obtain exact locations, measurements, levels, etc., at the site and adapt work to actual conditions.

B. Only Architectural drawings, Structural drawings, and site measurements may be utilized in calculations. Mechanical and electrical drawings are diagrammatic or schematic.

3.9 PAINTING AND FINISHING

A. Refer to individual sections for paint materials, surface preparation, and application of paint.

B. Do not paint piping specialties with factory-applied finish.

C. Damage and Touchup: Repair marred and damaged factory-painted finishes with materials and procedures to match original factory finish.

3.10 ERECTION SUPPORTS AND ANCHORAGE

A. Cut, fit, and place miscellaneous metal supports accurately in location, alignment, and elevation to support and anchor mechanical materials and equipment.

B. Field Welding: Comply with applicable codes and standards.

3.11 GROUTING

A. Install nonmetallic, non-shrink, grout for mechanical equipment base bearing surfaces, pump and other equipment base plates, and anchors. Mix and place and cure grout according to manufacturer's written instructions.

3.12 ACCESS

A. Provide access to all equipment, valves, controls, etc. as required for operation, repair and maintenance.

B. Access doors shall be provided when access through ceilings, chases, etc. is not provided by others.

3.13 ELECTRICAL WIRING

A. Install all electrical wiring in accordance with the National Electric Code and section 16050 of this specification.

B. All line voltage and low voltage wire shall be installed in metal raceways.

**END OF SECTION 230500**

# SECTION 230505 - BASIC PIPING MATERIALS AND METHODS

## PART 1 - GENERAL

### 1.1 RELATED DOCUMENTS

A. Drawings and general provisions of the Contract, including General and Supplementary Conditions and Division 1 Specification Sections, apply to this Section.

### 1.2 SUMMARY

A. This Section includes the following basic mechanical materials and methods to complement other Division 23 Sections.

1. Piping materials and installation instructions common to most piping systems.
2. Escutcheons.
3. Dielectric fittings.
4. Flexible connectors.
5. Mechanical sleeve seals.
6. Pipe hangers and supports
7. Meters and gages

B. Pipe and pipe fitting materials are specified in Division 23 piping system Sections.

### 1.3 DEFINITIONS

A. MSS: Manufacturer's Standardization Society for the Valve and Fittings Industry.

B. Terminology: As defined in MSS SP-90, "Guidelines on Terminology for Pipe Hangers and Supports."

### 1.4 PERFORMANCE REQUIREMENTS

A. Design support systems for piping to support multiple pipes capable of supporting combined weight of supported systems, system contents, and test water.

### 1.5 SUBMITTALS

A. Product Data: For dielectric fittings, mechanical sleeve seals, and each type of pipe hanger, channel support system component, and thermal-hanger shield insert indicated. Include scale range, ratings, and calibrated performance curves for each meter, gage, fitting, specialty, and accessory specified.

B. Maintenance Data: For meters and gages to include in maintenance manuals. Submit valve schedules to include in maintenance manuals for each piping system. Valve schedule shall indicate valve number, piping system and location of valve.

1.6 QUALITY ASSURANCE

A. Welders shall be qualified in accordance with applicable codes. Welding procedures and testing shall comply with ANSI B31.10 “Standard for Pressure Piping. Power Piping” and AWS Welding Handbook.

PART 2 - PRODUCTS

2.1 MANUFACTURERS

A. Available Manufacturers: Subject to compliance with requirements, manufacturers offering products that may be incorporated into the Work include, but are not limited to, the following:

1. Dielectric Unions, Couplings, Flanges:

   a. Capitol Manufacturing Co.
   b. Central Plastics Co.
   c. Eclipse, Inc.; Rockford-Eclipse Div.
   d. Epco Sales Inc.
   e. Hart Industries International, Inc.
   f. Watts Industries, Inc.; Water Products Div.
   g. Zurn Industries, Inc.; Wilkins Div.

2. Mechanical Sleeve Seals:

   a. Calpico, Inc.
   b. Metraflex Co.
   c. Thunderline/Link-Seal.

3. Pipe Hangers and Supports:

   a. AAA Technology and Specialties Co., Inc.
   b. B-Line Systems, Inc.
   c. Carpenter & Patterson, Inc.
   d. Grinnell Corp. B-Line Systems, Inc.
   e. Grinnell Corp.; Power-Strut Unit.
   f. GS Metals Corp.
   g. Michigan Hanger Co., Inc.; O-Strut Div.
   h. National Pipe Hanger Corp.
   i. Thomas & Betts Corp.
   j. Unistrut Corp.
   k. Wesanco, Inc.
   l. Thermal-Hanger Shield Inserts

4. Thermometers:

   a. AMETEK, Inc.; U.S. Gauge Div
   b. Dresser Industries, Inc.; Instrument Div.; Ashcroft Commercial Sales Operation.
   c. Dresser Industries, Inc.; Instrument Div.; Weksler Instruments Operating Unit.
   d. Ernst Gage Co.
   e. Marshalltown Instruments
   f. Miljoc Corporation
   g. Noshok, Inc.
   h. Reotemp Instrument Corp.

i. Tel-Tru Manufacturing Co., Inc.
j. Trerice: H. O. Trerice Co.
k. Weiss Instruments, Inc.
l. Winter's Thermogauges, Inc.

5. Pressure Gages:

a. AMETEK, Inc.; U.S. Gauge Div.
b. Dresser Industries, Inc.; Instrument Div.; Ashcroft Commercial Sales Operation.
c. Dresser Industries, Inc.; Instrument Div.; Weksler Instruments Operating Unit.
d. Ernst Gage Co.
e. Marsh Bellofram.
f. Miljoco Corporation
g. Noshok, Inc.
h. Trerice: H. O. Trerice Co.
i. Weiss Instruments, Inc.
j. WIKA Instruments Corp.
k. Winter's Thermogauges, Inc.

6. Test Plugs:

a. Flow Design, Inc.
b. MG Piping Products Co.
c. Miljoco Corporation
d. National Meter.
e. Peterson Equipment Co., Inc.
f. Sisco Manufacturing Co.
g. Trerice: H. O. Trerice Co.
h. Watts Industries, Inc.; Water Products Div.

## 2.2 PIPE AND PIPE FITTINGS

A. Refer to individual Division 23 piping Sections for pipe and fitting materials and joining methods.

B. Pipe Threads: ASME B1.20.1 for factory-threaded pipe and pipe fittings.

## 2.3 JOINING MATERIALS

A. Refer to individual Division 23 piping Sections for special joining materials not listed below.

B. Pipe-Flange Gasket Materials: Suitable for chemical and thermal conditions of piping system contents.

1. ASME B16.21, nonmetallic, flat, asbestos-free, 1/8-inch maximum thickness, unless thickness or specific material is indicated.

a. Full-Face Type: For flat-face, Class 125, cast-iron and cast-bronze flanges.
b. Narrow-Face Type: For raised-face, Class 250, cast-iron and steel flanges.

2. AWWA C110, rubber, flat face, 1/8 inch thick, unless otherwise indicated; and full-face or ring type, unless otherwise indicated.

C. Flange Bolts and Nuts: ASME B18.2.1, carbon steel, unless otherwise indicated.

D. Plastic, Pipe-Flange Gasket, Bolts, and Nuts: Type and material recommended by piping system manufacturer, unless otherwise indicated.

E. Solder Filler Metals: ASTM B 32.

1. Alloy Sn95 or Alloy Sn94: Approximately 95 percent tin and 5 percent silver, with 0.10 percent lead content.
2. Alloy E: Approximately 95 percent tin and 5 percent copper, with 0.10 percent maximum lead content.
3. Alloy HA: Tin-antimony-silver-copper zinc, with 0.10 percent maximum lead content.
4. Alloy HB: Tin-antimony-silver-copper nickel, with 0.10 percent maximum lead content.
5. Alloy Sb5: 95 percent tin and 5 percent antimony, with 0.20 percent maximum lead content.

F. Brazing Filler Metals: AWS A5.8.

1. BCuP Series: Copper-phosphorus alloys.
2. BAg1: Silver alloy.

G. Welding Filler Metals: Comply with AWS D10.12 for welding materials appropriate for wall thickness and chemical analysis of steel pipe being welded.

H. Solvent Cements: Manufacturer's standard solvent cements for PVC Piping. ASTM D 2564. Include primer according to ASTM F 656.

I. Flanged, Ductile-Iron Pipe Gasket, Bolts, and Nuts: AWWA C110, rubber gasket, carbon-steel bolts and nuts.

J. Couplings: Iron-body sleeve assembly, fabricated to match OD of plain-end, pressure pipes.

1. Sleeve: ASTM A 126, Class B, gray iron.
2. Followers: ASTM A 47 malleable iron or ASTM A 536 ductile iron.
3. Gaskets: Rubber.
4. Bolts and Nuts: AWWA C111.
5. Finish: Enamel paint.

## 2.4 DIELECTRIC FITTINGS

A. General: Assembly or fitting with insulating material isolating joined dissimilar metals, to prevent galvanic action and stop corrosion.

B. Description: Combination of copper alloy and ferrous; threaded, solder, plain, and weld-neck end types and matching piping system materials.

C. Insulating Material: Suitable for system fluid, pressure, and temperature.

D. Factory-fabricated, union assembly, for 250-psig minimum working pressure at 180 deg F.

## 2.5 MECHANICAL SLEEVE SEALS

A. Description: Modular design, with interlocking rubber links shaped to continuously fill annular space between pipe and sleeve. Include connecting bolts and pressure plates.

## 2.6 PIPING SPECIALTIES

A. Sleeves: The following materials are for wall, floor, slab, and roof penetrations:

1. Steel Sheet Metal: 0.0239-inch minimum thickness, galvanized, round tube closed with welded longitudinal joint.
2. Steel Pipe: ASTM A 53, Type E, Grade A, Schedule 40, galvanized, plain ends.
3. Cast Iron: Cast or fabricated "wall pipe" equivalent to ductile-iron pressure pipe, with plain ends and integral waterstop, unless otherwise indicated.
4. PVC: Manufactured, permanent, with nailing flange for attaching to wooden forms.
5. PVC Pipe: ASTM D 1785, Schedule 40.

B. Escutcheons: Manufactured wall, ceiling, and floor plates; deep-pattern type if required to conceal protruding fittings and sleeves.

1. ID: Closely fit around pipe, tube, and insulation of insulated piping.
2. OD: Completely cover opening.
3. Stamped Steel: One piece, with set screw, spring clips, concealed hinge and chrome-plated finish.

## 2.7 PIPE HANGERS AND SUPPORTS

A. Pipe Hangers, Supports, and Components: factory-fabricated components.

1. Galvanized, Metallic Coatings: For piping and equipment that will not have field-applied finish.
2. Nonmetallic Coatings: On attachments for electrolytic protection where attachments are in direct contact with copper tubing.

B. Channel Support Systems: MFMA-2, factory-fabricated components for field assembly.

1. Coatings: Manufacturer's standard finish, unless bare metal surfaces are indicated.
2. Nonmetallic Coatings: On attachments for electrolytic protection where attachments are in direct contact with copper tubing.

C. Thermal-Hanger Shield Inserts: 100-psi minimum compressive-strength insulation, encased in sheet metal shield. ASTM C 552, Type I cellular glass or water-repellent-treated, ASTM C 533, Type I calcium silicate with vapor barrier

## 2.8 MISCELLANEOUS PIPE SUPPORTING MATERIALS

A. Powder-Actuated Drive-Pin Fasteners: Powder-actuated-type, drive-pin attachments with pull-out and shear capacities appropriate for supported loads and building materials where used.

B. Mechanical-Anchor Fasteners: Insert-type attachments with pull-out and shear capacities appropriate for supported loads and building materials where used.

C. Structural Steel: ASTM A 36/A 36M, steel plates, shapes, and bars, black and galvanized.

D. Grout: ASTM C 1107, Grade B, factory-mixed and -packaged, nonshrink and nonmetallic, dry, hydraulic-cement grout.

2.9 THERMOMETERS, GENERAL

A. Scale Range: Temperature ranges for services listed are as follows:

1. Domestic Hot Water: 30 to 240 deg F, with 2-degree scale divisions.
2. Domestic Cold Water: 0 to 120 deg F, with 1-degree scale divisions.

B. Accuracy: Plus or minus 1 percent of range span or plus or minus one scale division to maximum of 1.5 percent of range span.

2.10 LIQUID-IN-GLASS THERMOMETERS

A. Case: Die-cast aluminum with hard powder-coat finish, acrylic front, 9 inches long.

B. Adjustable Joint: Finish to match case, 180-degree adjustment in vertical plane, 360-degree adjustment in horizontal plane, with locking device.

C. Tube: Blue reading, organic-liquid filled with magnifying lens.

D. Scale: Satin-faced nonreflective aluminum with permanently etched markings or white finished aluminum with black markings.

E. Stem: Die-cast aluminum for separable socket; of length to suit installation.

2.11 SEPARABLE SOCKETS (THERMOWELLS)

A. Description: Fitting with protective socket for installation in threaded pipe fitting to hold fixed thermometer stem.

1. Material: to match piping.
2. Extension-Neck Length: Nominal thickness of 2 inches, but not less than thickness of insulation. Omit extension neck for sockets for piping not insulated.
3. Insertion Length: To extend to one-third of diameter of pipe or 2 inches into pipe.

2.12 PRESSURE GAGES

A. Description: ASME B40.1, phosphor-bronze bourdon-tube type with bottom connection; dry type, unless liquid-filled-case type is indicated.

B. Case: Stainless steel with 4-1/2-inch diameter, clear acrylic lens.

C. Connector: Brass, NPS 1/4.

D. Scale: White-coated aluminum with permanently etched markings or white finished aluminum with black markings.

E. Accuracy: Grade 1A, plus or minus 1 percent of full scale.

F. Range: Comply with the following:

1. Vacuum: 30 inches Hg of vacuum to 15 psig of pressure.
2. Fluids under Pressure: Two times the operating pressure.

G. Gage Fitting Valves: NPS 1/4 brass or stainless-steel needle type.

2.13 TEST PLUGS

A. Description: Brass-body test plug in NPS 1/2 fitting.

B. Body: Length as required to extend beyond insulation.

C. Pressure Rating: 500 psig minimum.

D. Core Inserts: Two self-sealing valves, suitable for inserting 1/8-inch OD probe from dial-type thermometer or pressure gage adapter with probe.

E. Core Material for Air and Water: Nordel, good up to 350 deg F.

F. Core material for Natural Gas: Neoprene, good up to 200 deg F.

G. Test-Plug Cap: Gasketed and threaded cap, of same material as plug.

PART 3 - EXECUTION

3.1 PIPING SYSTEMS - COMMON REQUIREMENTS

A. General: Install piping as described below, unless piping Sections specify otherwise. Individual Division 23 piping Sections specify unique piping installation requirements.

B. General Locations and Arrangements: Drawing plans, schematics, and diagrams indicate general location and arrangement of piping systems. Indicated locations and arrangements were used to size pipe and calculate friction loss, expansion, pump sizing, and other design considerations.

C. Install piping at indicated slope.

D. Install components with pressure rating equal to or greater than system operating pressure.

E. Install piping in concealed interior and exterior locations, except in equipment rooms and service areas.

F. Install piping free of sags and bends.

G. Install exposed interior and exterior piping at right angles or parallel to building walls. Diagonal runs are prohibited, unless otherwise indicated.

H. Install piping tight to slabs, beams, joists, columns, walls, and other building elements. Allow sufficient space above removable ceiling panels to allow for ceiling panel removal.

I. Install piping to allow application of insulation plus 1-inch clearance around insulation.

J. Locate groups of pipes parallel to each other, spaced to permit valve servicing.

K. Install fittings for changes in direction and branch connections.

L. Install couplings according to manufacturer's written instructions.

M. Install pipe escutcheons for pipe penetrations of concrete and masonry walls, wall board partitions, and suspended ceilings.

N. Install sleeves for pipes passing through concrete and masonry walls, and concrete floor and roof slabs.

1. Cut sleeves to length for mounting flush with both surfaces.

a. Exception: Extend sleeves installed in floors of mechanical equipment areas or other wet areas 2 inches above finished floor level. Extend cast-iron sleeve fittings below floor slab as required to secure clamping ring if ring is specified.

2. Build sleeves into new walls and slabs as work progresses.
3. Install sleeves large enough to provide 1/4-inch annular clear space between sleeve and pipe or pipe insulation. Use the following sleeve materials:

O. Aboveground, Exterior-Wall, Pipe Penetrations: Seal penetrations using sleeves and mechanical sleeve seals. Size sleeve for 1-inch annular clear space between pipe and sleeve for installing mechanical sleeve seals.

P. Underground, Exterior-Wall, Pipe Penetrations: Install cast-iron "wall pipes" for sleeves. Seal pipe penetrations using mechanical sleeve seals. Size sleeve for 1-inch annular clear space between pipe and sleeve for installing mechanical sleeve seals.

Q. Fire-Barrier Penetrations: Maintain indicated fire rating of walls, partitions, ceilings, and floors at pipe penetrations. Seal pipe penetrations with firestopping materials

R. Verify final equipment locations for roughing-in.

S. Refer to equipment specifications in other Sections of these Specifications for roughing-in requirements.

T. Piping Joint Construction: Join pipe and fittings as follows and as specifically required in individual piping specification Sections:

1. Ream ends of pipes and tubes and remove burrs. Bevel plain ends of steel pipe.
2. Remove scale, slag, dirt, and debris from inside and outside of pipe and fittings before assembly.
3. Soldered Joints: Construct joints according to AWS's "Soldering Manual," Chapter "The Soldering of Pipe and Tube"; or CDA's "Copper Tube Handbook."
4. Brazed Joints: Construct joints according to AWS's "Brazing Handbook," Chapter "Pipe and Tube."
5. Threaded Joints: Thread pipe with tapered pipe threads according to ASME B1.20.1. Cut threads full and clean using sharp dies. Ream threaded pipe ends to remove burrs and restore full ID. Join pipe fittings and valves as follows:
6. Welded Joints: Construct joints according to AWS D10.12, "Recommended Practices and Procedures for Welding Low Carbon Steel Pipe," using qualified processes and welding operators according to "Quality Assurance" Article.
7. Flanged Joints: Align flange surfaces parallel. Select appropriate gasket material, size, type, and thickness for service application. Install gasket concentrically positioned. Assemble joints by sequencing bolt tightening to make initial contact of flanges and gaskets as flat and parallel as possible. Use suitable lubricants on bolt threads. Tighten bolts gradually and uniformly using torque wrench.
8. Plastic Piping Solvent-Cement Joints: Clean and dry joining surfaces by wiping with clean cloth or paper towels. Join pipe and fittings according to manufacturer’s recommendations.

U. Piping Connections: Make connections according to the following, unless otherwise indicated:

1. Install unions, in piping 2-inch NPS and smaller, adjacent to each valve and at final connection to each piece of equipment with 2-inch NPS or smaller threaded pipe connection.
2. Install flanges, in piping 2-1/2-inch NPS and larger, adjacent to flanged valves and at final connection to each piece of equipment with flanged pipe connection.
3. Install dielectric unions and flanges to connect piping materials of dissimilar metals.

## 3.2 HANGER AND SUPPORT APPLICATIONS

A. Comply with MSS SP-69 for pipe hanger selections and applications.

B. Comply with MSS SP-89 for fabrication and installation procedures.

C. Horizontal-Piping Hangers and Supports: Use swivel ring or clelvis type hangers.

D. Vertical-Piping: Use riser clamps.

E. Saddles and Shields: Install of length recommended by manufacturer to prevent crushing insulation.

## 3.3 HANGER AND SUPPORT INSTALLATION

A. Pipe Hanger and Support Installation: Comply with MSS SP-69 and MSS SP-89. Install hangers, supports, clamps, and attachments as required to properly support piping from building structure.

B. Channel Support System Installation: Arrange for grouping of parallel runs of piping and support together on field-assembled channel systems. Field assemble and install according to manufacturer's written instructions.

C. Heavy-Duty Steel Trapeze Installation: Arrange for grouping of parallel runs of horizontal piping and support together on field-fabricated, heavy-duty trapezes.

D. Install building attachments within concrete slabs or attach to structural steel. Install additional attachments at concentrated loads, including valves, flanges, guides, strainers, and expansion joints, and at changes in direction of piping. Install concrete inserts before concrete is placed; fasten inserts to forms and install reinforcing bars through openings at top of inserts.

E. Install hangers and supports complete with necessary inserts, bolts, rods, nuts, washers, and other accessories.

F. Install hangers and supports to allow controlled thermal movement of piping systems, to permit freedom of movement between pipe anchors, and to facilitate action of expansion joints, expansion loops, expansion bends, and similar units.

G. Load Distribution: Install hangers and supports so that piping live and dead loads and stresses from movement will not be transmitted to connected equipment.

H. Pipe Slopes: Install hangers and supports to provide indicated pipe slopes and so maximum pipe deflections allowed by ASME B31.9, "Building Services Piping," is not exceeded.

I. Insulated Piping: Comply with the following:

1. Piping Operating above Ambient Air Temperature: Clamp may project through insulation.

2. Piping Operating below Ambient Air Temperature: Use thermal-hanger shield insert with clamp sized to match OD of insert.
3. Do not exceed pipe stress limits according to ASME B31.9.
4. Install protection saddles or thermal hanger shields, if insulation without vapor barrier is indicated. Fill interior voids with insulation that matches adjoining insulation.
5. Install protective shields on cold piping with vapor barrier. Shields shall span arc of 180 degrees.

J. Support vertical piping and tubing at base and at each floor.

K. Install hangers for copper tubing with the following maximum spacing and minimum rod diameters:

1. 3/4-Inch NPS and Smaller: Maximum horizontal spacing, 60 inches with 3/8-inch minimum rod diameter; maximum vertical spacing, 10 feet.
2. 1-Inch NPS: Maximum horizontal spacing, 72 inches with 3/8-inch minimum rod diameter; maximum vertical spacing, 10 feet.
3. 1-1/4-Inch NPS: Maximum horizontal spacing, 72 inches with 3/8-inch minimum rod diameter; maximum vertical spacing, 10 feet.
4. 1-1/2 and 2-Inch NPS: Maximum horizontal spacing, 96 inches with 3/8-inch minimum rod diameter; maximum vertical spacing, 10 feet.
5. 2-1/2-Inch NPS: Maximum horizontal spacing, 108 inches with 1/2-inch minimum rod diameter; maximum vertical spacing, 10 feet.
6. 3-Inch NPS: Maximum horizontal spacing, 10 feet with 1/2-inch minimum rod diameter; maximum vertical spacing, 10 feet.
7. 4- and 5-Inch NPS: Maximum horizontal spacing, 10 feet with 1/2-inch minimum rod diameter; maximum vertical spacing, 10 feet.
8. 6-Inch NPS: Maximum horizontal spacing, 10 feet with 5/8-inch minimum rod diameter; maximum vertical spacing, 10 feet.
9. 8-Inch NPS: Maximum horizontal spacing, 10 feet with 3/4-inch minimum rod diameter; maximum vertical spacing, 10 feet.

L. Install hangers for steel and ductile-iron piping with the following maximum spacing and minimum rod diameters:

1. 1-1/4-Inch NPS and Smaller: Maximum horizontal spacing, 84 inches with 3/8-inch minimum rod diameter; maximum vertical spacing, 15 feet.
2. 1-1/2-Inch NPS: Maximum horizontal spacing, 108 inches with 3/8-inch minimum rod diameter; maximum vertical spacing, 15 feet.
3. 2-Inch NPS: Maximum horizontal spacing, 10 feet with 3/8-inch minimum rod diameter; maximum vertical spacing, 15 feet.
4. 2-1/2-Inch NPS: Maximum horizontal spacing, 11 feet with 1/2-inch minimum rod diameter; maximum vertical spacing, 15 feet.
5. 3-Inch NPS: Maximum horizontal spacing, 12 feet with 1/2-inch minimum rod diameter; maximum vertical spacing, 15 feet.
6. 4- and 5-Inch NPS: Maximum horizontal spacing, 12 feet with 5/8-inch minimum rod diameter; maximum vertical spacing, 15 feet.
7. 6-Inch NPS: Maximum horizontal spacing, 12 feet with 3/4-inch minimum rod diameter; maximum vertical spacing, 15 feet.
8. 8- through 12-Inch NPS: Maximum horizontal spacing, 12 feet with 7/8-inch minimum rod diameter; maximum vertical spacing, 15 feet.

M. Install hangers for PVC plastic piping with the following maximum spacing and minimum rod diameters:

1. 2-Inch NPS and Smaller: Maximum horizontal spacing, 48 inches with 3/8-inch minimum rod diameter; maximum vertical spacing, 48 inches.
2. 2-1/2- to 3-1/2-Inch NPS: Maximum horizontal spacing, 48 inches with 1/2-inch minimum rod diameter; maximum vertical spacing, 48 inches.
3. 4- and 5-Inch NPS: Maximum horizontal spacing, 48 inches with 5/8-inch minimum rod diameter; maximum vertical spacing, 48 inches.
4. 6-Inch NPS: Maximum horizontal spacing, 48 inches with 3/4-inch minimum rod diameter; maximum vertical spacing, 48 inches.
5. 8-Inch NPS: Maximum horizontal spacing, 48 inches with 7/8-inch minimum rod diameter; maximum vertical spacing, 48 inches.

## 3.4 EQUIPMENT SUPPORTS

A. Fabricate structural-steel stands to suspend equipment from structure above or to support equipment above floor.

B. Grouting: Place grout under supports for equipment and make smooth bearing surface.

C. Cut, drill, and fit miscellaneous metal fabrications for heavy-duty steel trapezes and equipment supports.

D. Hanger Adjustment: Adjust hangers to distribute loads equally on attachments and to achieve indicated slope of pipe.

## 3.5 METER AND GAGE INSTALLATION, GENERAL

A. Install meters, gages, and accessories according to manufacturer's written instructions for applications where used.

B. Install meters and gages adjacent to machines and equipment to allow service and maintenance.

C. Calibrate meters and gauges according to manufacturer's written instructions, after installation

## 3.6 THERMOMETER INSTALLATION

A. Install thermometers and adjust vertical and tilted positions.

B. Install at locations indicated on plans.

C. Install separable sockets in vertical position in piping tees where fixed thermometers are indicated.

D. When thermometers are installed in piping 1” and smaller, install well in 1-1/4” with reducers to prevent restriction of flow.

## 3.7 PRESSURE-GAGE INSTALLATION

A. Install pressure gages in piping tees with pressure-gage valve located on pipe at most readable position.

B. Install pressure gages in the following locations:

1. Discharge of each pressure-reducing valve.
2. Building water-service entrance.
3. Chilled-water and condenser-water inlets and outlets of chillers.
4. Install liquid-filled-type pressure gages at suction and discharge of each pump.

C. Install pressure-gage needle valve and snubber in piping to pressure gages.

**END OF SECTION 230505**

**SECTION 230700 - DUCT INSULATION**

PART 1 - GENERAL

1.1 RELATED DOCUMENTS

A. Drawings and general provisions of the Contract, including General and Supplementary Conditions and Division 1 Specification Sections, apply to this Section.

1.2 SUMMARY

A. This Section includes semirigid and flexible duct, plenum; acoustical duct liner; accessories and attachments; and sealing compounds.

1.3 SUBMITTALS

A. Product Data: Include product data description, list of materials, thickness, density and k-values for each product type, locations, manufacturer's installation instructions, flames spread and smoke developed ratings.

1.4 QUALITY ASSURANCE

A. Fire-Test-Response Characteristics: As determined by testing materials identical to those specified in this Section according to ASTM E 84, by a testing and inspecting agency acceptable to authorities having jurisdiction. Factory label insulation and jacket materials and sealer and cement material containers with appropriate markings of applicable testing and inspecting agency.

1. Insulation Installed Indoors: Flame-spread rating of 25 or less, and smoke-developed rating of 50 or less.

2. Insulation Installed Outdoors: Flame-spread rating of 75 or less, and smoke-developed rating of 150 or less.

PART 2 - PRODUCTS

2.1 MANUFACTURERS

A. Manufacturers: Subject to compliance with requirements, provide products by one of the following:

1. Insulation:

a. CertainTeed
b. Armaflex
c. Rubatex
d. Knauf
e. Owens-Corning
f. Halstead

g. Armstrong
h. Manville
i. Pittsburgh Corning

2.2 INSULATION MATERIALS

A. Mineral-Fiber Board Thermal Insulation: Glass fibers bonded with a thermosetting resin. Comply with ASTM C 612, Type IB, without facing and with all-service jacket manufactured from kraft paper, reinforcing scrim, aluminum foil, and vinyl film.

B. Mineral-Fiber Blanket Thermal Insulation: Glass fibers bonded with a thermosetting resin. Comply with ASTM C 553, Type I, 0.75 pcf density, without facing and with all-service jacket manufactured from kraft paper, reinforcing scrim, aluminum foil, and vinyl film.

C. Acoustical duct liner: ASTM C 518 with resin and black mat coated surface exposed to air stream to prevent erosion of glass fibers. Thermal Conductivity (k-Value): 0.26 at 75 deg F mean temperature. Nominal Density 1.5 lbs per cubic foot, minimum noise reduction characteristic shall be 0.55 for 1" thickness; rated for 6000 fpm air velocity; air friction multiplier less than 1.6 at 2000 fpm.

2.3 ACCESSORIES AND ATTACHMENTS

A. Glass Cloth and Tape: Comply with MIL-C-20079H, Type I for cloth and Type II for tape. Woven glass-fiber fabrics, plain weave, presized a minimum of 8 oz./sq. yd..

B. Bands: 3/4 inch wide, materials compatible with jacket:

C. Wire: 0.080-inch, nickel-copper alloy; 0.062-inch, soft-annealed, stainless steel; or 0.062-inch, soft-annealed, galvanized steel.

D. Weld-Attached Anchor Pins and Washers: Copper-coated steel pin for capacitor-discharge welding and galvanized speed washer. Pin length sufficient for insulation thickness indicated.

E. Adhesive-Attached Anchor Pins and Speed Washers: Galvanized steel plate, pin, and washer manufactured for attachment to duct and plenum with adhesive. Pin length sufficient for insulation thickness indicated.

2.4 VAPOR RETARDERS

A. Mastics: Materials recommended by insulation material manufacturer that are compatible with insulation materials, jackets, and substrates.

PART 3 - EXECUTION

3.1 EXAMINATION AND PREPARATION

A. Examine substrates and conditions for compliance with requirements for installation and other conditions affecting performance of insulation application. Proceed with installation only after unsatisfactory conditions have been corrected.

B. Surface Preparation: Clean and dry surfaces to receive insulation. Remove materials that will adversely affect insulation application.

## 3.2 MINERAL-FIBER INSULATION APPLICATION

A. Apply insulation materials, accessories, and finishes according to the manufacturer's written instructions; with smooth, straight, and even surfaces; and free of voids throughout the length of ducts and fittings.

B. Refer to schedules at the end of this Section for materials, forms, jackets, and thicknesses required for each duct system.

C. Seal joints and seams with vapor-retarder mastic on insulation indicated to receive a vapor retarder.

D. Apply insulation with tight longitudinal seams and end joints. Bond seams and joints with adhesive recommended by the insulation material manufacturer.

E. Apply insulation with the least number of joints practical.

F. Apply insulation over fittings and specialties, with continuous thermal and vapor-retarder integrity, unless otherwise indicated.

G. Hangers and Anchors: Where vapor retarder is indicated, seal penetrations in insulation at hangers, supports, anchors, and other projections with vapor-retarder mastic. Apply insulation continuously through hangers and around anchor attachments.

H. Apply insulation with integral jackets as follows:

1. Pull jacket tight and smooth.
2. Joints and Seams: Cover with tape and vapor retarder as recommended by insulation material manufacturer to maintain vapor seal.
3. Vapor-Retarder Mastics: Where vapor retarders are indicated, apply mastic on seams and joints and at ends adjacent to duct flanges and fittings.

I. Interior Wall and Partition Penetrations: Apply insulation continuously through walls and partitions, except fire-rated walls and partitions.

J. Fire-Rated Wall and Partition Penetrations: Terminate insulation at fire/smoke damper sleeves for fire-rated wall and partition penetrations.

K. Secure insulation with adhesive and anchor pins and speed washers.

## 3.3 SHOP APPLICATION OF LINER IN RECTANGULAR DUCTS

A. Adhere a single layer of indicated thickness of duct liner with 90 percent coverage of adhesive at liner contact surface area. Multiple layers of insulation to achieve indicated thickness are prohibited.

B. Butt transverse joints without gaps and coat joint with adhesive.

C. Fold and compress liner in corners of rectangular ducts or cut and fit to ensure butted-edge overlapping.

D. Do not apply liners in rectangular ducts with longitudinal joints, except at corners of ducts, unless duct size and standard liner product dimensions make longitudinal joints necessary.

E. Secure liner with mechanical fasteners 4 inches from corners and at intervals not exceeding 12 inches transversely around perimeter; at 3 inches from transverse joints and at intervals not exceeding 18 inches longitudinally.

F. Secure transversely oriented liner edges facing the airstream with metal nosings that have either channel or "Z" profile or are integrally formed from duct wall.

G. Ductwork sizes indicated on drawings are the free area size. Ductwork sizes shall be increased to accommodate the addition of liner to maintain the plan indicated free area size.

3.4 DUCT AND PLENUM APPLICATION SCHEDULE

A. Items Not Insulated: Unless otherwise indicated, do not apply insulation to the following systems, materials, and equipment:

1. Fibrous-glass ducts.
2. Factory-insulated flexible ducts.
3. Factory-insulated plenums, casings, terminal boxes, and filter boxes and sections.
4. Flexible connectors.
5. Vibration-control devices.
6. Testing agency labels and stamps.
7. Nameplates and data plates.
8. Access panels and doors in air-distribution systems.

B. Service: Supply air, Rectangular, above ceiling

1. Material: Duct Liner
2. Thickness: 1 inch.
3. Vapor Retarder Required: Yes.

C. Service: Supply air, Round, above ceiling.

1. Material: Mineral-fiber blanket.
2. Thickness: 1-1/2 inches.
3. Vapor Retarder Required: Yes.

D. Service: Supply Air, Round, in attic

1. Material: Mineral-fiber blanket
2. Thickness: 2” minimum, additional if required to meet R-8
3. Vapor Retarder Required: Yes.
4. Minimum R-Value: R-8

E. Service: Return-air, Rectangular.

1. Material: Duct Liner.
2. Thickness: 1 inch.
3. Vapor Retarder Required: No.

F. Service: Round, return air, above ceiling.

1. Material: None
2. Thickness: None.
3. Vapor Retarder Required: No.

G. Service: Supply Air, Round, in attic

1. Material: Mineral-fiber blanket
2. Thickness: 2” minimum, additional if required to meet R-8
3. Vapor Retarder Required: Yes.
4. Minimum R-Value: R-8

H. Service: Outside air, Rectangular duct and plenums, exposed in mechanical room.

1. Material: Mineral-fiber board.
2. Thickness: 2 inches.
3. Vapor Retarder Required: Yes.

I. Service: Round, outside air.

1. Material: Mineral-fiber blanket.
2. Thickness: 2 inches.
3. Vapor Retarder Required: Yes.

J. Service: Exhaust Air, Rectangular duct and plenums, downstream of fan, exposed in mechanical room.

1. Material: Mineral-fiber board.
2. Thickness: 2 inches.
3. Vapor Retarder Required: Yes.
4.

**END OF SECTION 230700**

**SECTION 230720 - PIPE INSULATION FOR HVAC**

PART 1 - GENERAL

1.1 RELATED DOCUMENTS

A. Drawings and general provisions of the Contract, including General and Supplementary Conditions and Division 1 Specification Sections, apply to this Section.

1.2 SUMMARY

A. This Section includes preformed, rigid and flexible pipe insulation; insulating cements; field-applied jackets; accessories and attachments; and sealing compounds.

1.3 SUBMITTALS

A. Product Data: Include product data description, list of materials, thickness, density, k-values and r-values for each product type, locations, manufacturer's installation instructions, flames spread and smoke developed ratings.

1.4 QUALITY ASSURANCE

A. Fire-Test-Response Characteristics: As determined by testing materials identical to those specified in this Section according to ASTM E 84, by a testing and inspecting agency acceptable to authorities having jurisdiction. Factory label insulation and jacket materials and sealer and cement material containers with appropriate markings of applicable testing and inspecting agency.

1. Insulation Installed Indoors: Flame-spread rating of 25 or less, and smoke-developed rating of 50 or less.
2. Insulation Installed Outdoors: Flame-spread rating of 75 or less, and smoke-developed rating of 150 or less.

PART 2 - PRODUCTS

2.1 MANUFACTURERS

A. Manufacturers: Subject to compliance with requirements, provide products by one of the following:

1. Flexible Elastomeric Thermal Insulation:

a. Armstrong World Industries, Inc.
b. Rubatex Corp.

## 2.2 INSULATION MATERIALS

A. Flexible Elastomeric Thermal Insulation: Closed-cell, sponge- or expanded-rubber materials. Comply with ASTM C 534, Type I for tubular materials and Type II for sheet materials.

1. Adhesive: As recommended by insulation material manufacturer.
2. Ultraviolet-Protective Coating: As recommended by insulation manufacturer.

## 2.3 VAPOR RETARDERS

A. Mastics: Materials recommended by insulation material manufacturer that are compatible with insulation materials, jackets, and substrates.

# PART 3 - EXECUTION

## 3.1 EXAMINATION AND PREPARATION

A. Examine substrates and conditions for compliance with requirements for installation and other conditions affecting performance of insulation application.

B. Surface Preparation: Clean and dry pipe and fitting surfaces. Remove materials that will adversely affect insulation application.

## 3.2 GENERAL APPLICATION REQUIREMENTS

A. Apply insulation materials, accessories, and finishes according to the manufacturer's written instructions; with smooth, straight, and even surfaces; free of voids throughout the length of piping, including fittings, valves, and specialties.

B. Refer to schedules at the end of this Section for materials, forms, jackets, and thicknesses required for each piping system.

C. Seal joints and seams with vapor-retarder mastic on insulation indicated to receive a vapor retarder.

D. Apply insulation with tight longitudinal seams and end joints. Bond seams and joints with adhesive recommended by the insulation material manufacturer.

E. Apply insulation with the least number of joints practical.

F. Apply insulation over fittings, valves, and specialties, with continuous thermal and vapor-retarder integrity, unless otherwise indicated. Refer to special instructions for applying insulation over fittings, valves, and specialties.

G. Hangers and Anchors: Where vapor retarder is indicated, seal penetrations in insulation at hangers, supports, anchors, and other projections with vapor-retarder mastic.

H. Insulation Terminations: For insulation application where vapor retarders are indicated, taper insulation ends. Seal tapered ends with a compound recommended by the insulation material manufacturer to maintain vapor retarder.

I. Apply adhesives and mastics at the manufacturer's recommended coverage rate.

J. Exterior Wall Penetrations: For penetrations of below-grade exterior walls, terminate insulation flush with mechanical sleeve seal. Seal terminations with vapor-retarder mastic.

K. Interior Wall and Partition Penetrations: Apply insulation continuously through walls and floors.

## 3.3 FLEXIBLE ELASTOMERIC THERMAL INSULATION APPLICATION

A. Apply insulation to straight pipes and tubes as follows:

1. Follow manufacturer's written instructions for applying insulation.
2. Seal longitudinal seams and end joints with manufacturer's recommended adhesive. Cement to avoid openings in insulation that will allow passage of air to the pipe surface.

B. Apply pipe insulation to outer diameter of pipe flanges.

C. Apply insulation to fittings and elbows as follows:

1. Apply mitered sections of pipe insulation.
2. Secure insulation materials and seal seams with manufacturer's recommended adhesive. Cement to avoid openings in insulation that will allow passage of air to the pipe surface.

D. Apply insulation to valves and specialties as follows:

1. Apply preformed valve covers manufactured of the same material as pipe insulation and attached according to the manufacturer's written instructions.
2. Apply cut segments of pipe and sheet insulation to valve body. Arrange insulation to permit access to packing and to allow valve operation without disturbing insulation.
3. Secure insulation to valves and specialties and seal seams with manufacturer's recommended adhesive. Cement to avoid openings in insulation that will allow passage of air to the pipe surface.

## 3.4 INSULATION APPLICATION SCHEDULE

A. Items Not Insulated: Unless otherwise indicated, do not apply insulation to the following systems, materials, and equipment:

1. Flexible connectors.
2. Vibration-control devices.
3. Fire-suppression piping.
4. Drainage piping located in crawl spaces, unless otherwise indicated.
5. Below-grade piping, unless otherwise indicated.
6. Chrome-plated pipes and fittings, unless potential for personnel injury.
7. Air chambers, unions, strainers, check valves, plug valves, and flow regulators.

B. Service: Condensate drain piping (CD).

1. Insulation Material: None.
2. Insulation Thickness: None
3. Vapor Retarder Required: No.

C. Service: Refrigerant suction (RS).

1. Insulation Material: Flexible elastomeric
2. Insulation Thickness: 3/4”
3. Vapor Retarder Required: Yes.
4. Finish: Two coats of manufacturer’s coating when exposed to outside.

D. Service: Refrigerant liquid (RL).

1. Insulation Material: None
2. Insulation Thickness: None
3. Vapor Retarder Required: No

E. Service: Refrigerant hot gas discharge (RD).

1. Insulation Material: Flexible elastomeric
2. Insulation Thickness: 1/2”
3. Vapor Retarder Required: Yes.
4. Finish: Two coats of manufacturer’s coating when exposed to outside.

**END OF SECTION 230720**

# SECTION 233113 - METAL DUCTS AND ACCESSORIES

## PART 1 - GENERAL

### 1.1 RELATED DOCUMENTS

A. Drawings and general provisions of the Contract, including General and Supplementary Conditions and Division 1 Specification Sections, apply to this Section.

### 1.2 SUMMARY

A. This Section includes metal ducts and accessories for heating, ventilating, and air-conditioning systems, diffusers, registers and grilles, and gas vents.

### 1.3 DEFINITIONS

A. Pressure Classification for Ductwork: As defined by to SMACNA's "HVAC Duct Construction Standards--Metal and Flexible" and applicable codes.

1. Low Pressure: Maximum 2500 fpm velocity; maximum 2.0" WG positive or –2.0" WG negative static pressure class.

2. Medium Pressure: Maximum 4000 fpm velocity; maximum 4.0" WG positive or –3.0" WG negative static pressure class.

### 1.4 SUBMITTALS

A. Product data including product construction, installation instructions and performance data for the following:

1. Sealing materials.
2. Backdraft dampers.
3. Manual-volume dampers.
4. Fire and smoke dampers.
5. Duct-mounted access doors and panels.
6. Flexible ducts
7. Diffuser's Registers & Grilles

B. No requirement for shop drawings if after examining the contract documents and actual conditions, contractor agrees system can be installed as shown.

C. Shop Drawings: Show details of the following:

1. Fabrication, assembly, and installation, including plans, elevations, sections, components, and attachments to other work.
2. Duct layout indicating pressure classifications and sizes on plans.
3. Fittings.
4. Reinforcement and spacing.
5. Seam and joint construction.

6. Penetrations through fire-rated and other partitions.
7. Terminal unit, coil, and humidifier installations.
8. Hangers and supports, including methods for building attachment, vibration isolation, seismic restraints, and duct attachment.

D. Field Test Reports: Indicate and interpret test results for compliance with performance requirements.

E. Record Drawings: Indicate actual routing, fitting details, reinforcement, support, and installed accessories and devices.

1.5 QUALITY ASSURANCE

A. Comply with NFPA 90A, "Installation of Air Conditioning and Ventilating Systems," unless otherwise indicated.

PART 2 - PRODUCTS

2.1 MANUFACTURERS

A. Manufacturers: Subject to compliance with requirements, provide products by one of the following:

1. Backdraft and Volume Dampers

a. Greenheck
b. Air Balance
c. American Warming
d. Cesco
e. Louvers and Dampers, Inc.
f. Penn
g. Prefco
h. Carnes
i. Ruskin
j. Vent Products

2. Fire and Smoke Dampers

a. Greenheck
b. Air Balance
c. American Warming
d. Cesco
e. Louvers and Dampers, Inc.
f. Penn
g. Pottorff
h. Prefco
i. Carnes
j. Ruskin
k. Vent Products
l. Nailor Industries

3. Flexible Ducts

    a. Flexible Air Products
    b. Flexmaster
    c. Thermaflex
    d. Certainteed
    e. Wiremold
    f. General Flex Corp
    g. H.K. Porter

4. Duct Access Doors

    a. Air Balance
    b. American Warming
    c. Cesco
    d. Ventfrabrics
    e. Penn
    f. Prefco
    g. Carnes
    h. Ruskin
    i. Kees
    j. United McGill
    k. Nailor Industries

5. Diffusers, Registers, Grilles

    a. Carnes
    b. J & J Register
    c. Krueger
    d. Reliable
    e. Price
    f. Tuttle and Bailey
    g. Metal-Aire
    h. Titus
    i. Hart and Cooly
    j. Anemostat
    k. Nailor Industies

6. Louvers

    a. American Warming
    b. Dowco
    c. Louvers and Dampers, Inc.
    d. Airline
    e. Greenheck
    f. Ruskin
    g. Aerolite
    h. Vent Products
    i. Arrow
    j. Reliable

## 2.2 SHEET METAL MATERIALS

A. Galvanized, Sheet Steel: Lock-forming quality; ASTM A 653/A 653M, G90 coating designation; mill-phosphatized finish for surfaces of ducts exposed to view.

B. Reinforcement Shapes and Plates: Galvanized steel reinforcement where installed on galvanized, sheet metal ducts; compatible materials for aluminum and stainless-steel ducts.

C. Tie Rods: Galvanized steel, 1/4-inch minimum diameter for 36-inch length or less; 3/8-inch minimum diameter for lengths longer than 36 inches.

## 2.3 SEALANT MATERIALS

A. Duct Sealant: UL classified, non-combustible, flame spread 25 or less, smoke developed rating of 540 or less, resistant to water, pressure rupture rating of 16” WG minimum, suitable for use alone or with tape, application an operational temperature ranges appropriate for usage.

## 2.4 MANUFACTURED DUCT JOINTS

A. Manufactured duct joining system to consistent of roll formed angles, corner pieces, metal cleats and gasket material. Construct and join ductwork in accordance with the latest SMACNA test data and joint reinforcement schedule corresponding to duct gauge used. Corners to be down set design, no bolt design except bolting is required for medium pressure applications. Reinforcements requirement for sheet metal to comply with latest SMACNA for manufactured duct Joining technique appropriate to get to pressure class.

## 2.5 BACKDRAFT DAMPERS

A. Dampers to be multi-blade, parallel action, counter-balanced backdraft dampers of galvanized steel or extruded aluminum, with center pivoted blades linked together with blade edge seals, brass or steel bearings, and plated steel pivot pin.

## 2.6 MANUAL-VOLUME DAMPERS

A. Fabricate in accordance with latest edition of SMACNA HVAC Duct Construction Standards – Metal and Flexible and as indicated.

B. Fabricate single blade dampers for duct sizes 9 ½: high x 30” width maximum. Single blade dampers to have spring end bearing regulator. Provide end brace for static pressure greater than 2.0” WG. Provide end brace for static pressure greater than 2.0”.

C. Fabricate multi-blade damper of opposed blade pattern using minimum 16 gauge steel with maximum blade sizes 6” x 48”. Where width exceeds 48”, provide regulator at both ends. Assemble center and edge crimped blades in 16 gauge channel frame with suitable hardware. Blades and frame to be galvanized or prime coated steel except where indicated for special application.

D. Provide end bearings with end seals for pressure class required except in round duct 12” in diameter and smaller.

## 2.7 FIRE DAMPERS

A. General: Labeled to UL 555, One and one-half hours fire rating with 165ºF fusible link unless otherwise indicated.

B. Frame: SMACNA Type A with blades in airstream; fabricated with roll-formed, 0.034-inch- thick galvanized steel; with mitered and interlocking corners. Allowed only if duct free area loss is less than 5%.

C. Frame: SMACNA Type B with blades out of airstream; fabricated with roll-formed, 0.034-inch- thick galvanized steel; with mitered and interlocking corners.

D. Mounting Sleeve: Factory- or field-installed galvanized, sheet steel.

1. Minimum Thickness: 0.052 inch or 0.138 inch thick as indicated, and length to suit application.
2. Exceptions: Omit sleeve where damper frame width permits direct attachment of perimeter mounting angles on each side of wall or floor, and thickness of damper frame complies with sleeve requirements.

E. Mounting Orientation: Vertical or horizontal as indicated.

F. Blades: Roll-formed, interlocking, 0.034-inch- thick, galvanized, sheet steel. In place of interlocking blades, use full-length, 0.034-inch- thick, galvanized steel blade connectors.

G. Horizontal Dampers: Include a blade lock and stainless-steel negator closure spring.

## 2.8 CEILING FIRE DAMPERS

A. General: Labeled to UL 555C, ; comply with construction details for tested floor- and roof-ceiling assemblies as indicated in UL's "Fire Resistance Directory."

B. Frame: 0.040-inch- thick, galvanized, sheet steel; round or rectangular; style to suit ceiling construction.

C. Blades: 0.034-inch- thick, galvanized, sheet steel with nonasbestos refractory insulation.

D. Volume Adjustment: UL-labeled, fusible volume-control adjustment.

E. Fusible Link: Replaceable, 165 deg F rated unless otherwise indicated.

## 2.9 SMOKE DAMPERS

A. General: Labeled to UL 555S. Combination fire and smoke dampers shall be labeled for one-and-one-half-hour rating to UL 555.

B. Fusible Link: Replaceable, 165 deg F unless otherwise as indicated.

C. Frame and Blades: 0.064-inch- thick, galvanized, sheet steel.

D. Mounting Sleeve: Factory-installed, 0.052-inch- thick, galvanized, sheet steel; length to suit wall or floor application.

E. Damper Motors: 115 V, single phase, 60 Hz., provide for modulating or two-position action per application.

## 2.10 TURNING VANES

A. Fabricate to comply with SMACNA's "HVAC Duct Construction Standards--Metal and Flexible."

B. Manufactured Turning Vanes: Fabricate of 1-1/2-inch- wide, curved blades set 3/4 inch o.c.; support with bars perpendicular to blades set 2 inches on center; and set into side strips suitable for mounting in ducts.

## 2.11 DUCT-MOUNTED ACCESS DOORS AND PANELS

A. General: Fabricate doors and panels airtight and suitable for duct pressure class.

B. Frame: Galvanized, sheet steel, with bend-over tabs and foam gaskets.

C. Door: Double-wall, galvanized, sheet metal construction with insulation fill and thickness, and number of hinges and locks as indicated for duct pressure class. Include vision panel where indicated. Include 1-by-1-inch butt or piano hinge and cam latches.

D. Seal around frame attachment to duct and door to frame with neoprene or foam rubber.

E. Insulation: 1-inch- thick, fibrous-glass or polystyrene-foam board.

F. Label: Label access doors at fire and smoke damper locations per NFPA 90A.

## 2.12 FLEXIBLE CONNECTORS

A. General: Flame-retarded or noncombustible fabrics, coatings, and adhesives complying with UL 181, Class 1.

B. Neoprene double-coated woven glass fibber fabric in accordance with NFPA 90A, suitable for temperatures and pressures of application, approximately 6” wide, crimped into metal edge strip.

## 2.13 FLEXIBLE DUCTS

A. General: Comply with UL 181, Class 1.

B. Factory-fabricated, insulated, round duct, with an outer jacket enclosing 1-1/2-inch- thick, glass-fiber insulation around a continuous inner liner.

1. Reinforcement: Steel-wire helix encapsulated in inner liner.
2. Outer Jacket: Polyethylene film or Glass-reinforced, silver Mylar with a continuous hanging tab, integral fibrous-glass tape, and nylon hanging cord.
3. Inner Liner: Polyethylene film.

C. Pressure Rating: 4-inch wg positive, 3/4-inch wg negative.

## 2.14 DIFFUSER, REGISTERS AND GRILLES

A. General: Sizes, types and capacities as indicated. Verify ceiling and wall frame types and dimensions from architectural drawings. Factory baked enamel finish with color selected by Architect unless otherwise indicated.

B. Diffusers: Circular, square, or rectangular air distribution outlet comprised of deflecting members discharging supply air in various directions and planes and arranged to promote mixing of primary air with secondary room air. Opposed blade dampers.

C. Grilles: Streamlined blades, single or double deflection as indicated.

D. Registers: Combination grille and opposed damper assembly.

## 2.15 LOUVERS AND LOUVERED PENTHOUSES

A. Ruskin ELF375DX, Extruded aluminum; 4” deep frame, drainable and storm-proof blade configuration, 0.90” frame and 0.81” nominal wall thickness blades, 3 ½” blade spacing, 50% minimum free area based on 48”x 48” louver size; ¾” aluminum mesh birdscreen. Finish baked enamel, color selected by Architect.

## 2.16 LOUVER BLANK-OFF PANELS

A. Double wall construction with minimum 22 gauge galvanized steel sheet metal and 2” rigid insulation. Paint louver size flat black. Seal weathertight to frame.

## 2.17 ROOF HOODS

A. Intake hoods shall be designed for intake velocity of 50% or neck. Relief hoods shall be designed for equal velocity to neck.

## 2.18 ACCESSORY HARDWARE

A. Flexible Duct Clamps: Stainless-steel band with cadmium-plated hex screw to tighten band with a worm-gear action, in sizes 3 to 18 inches to suit duct size.

B. Adhesives: High strength, quick setting, neoprene based, waterproof, and resistant to gasoline and grease.

## 2.19 HANGERS AND SUPPORTS

A. Building Attachments: Concrete inserts, powder-actuated fasteners, or structural-steel fasteners appropriate for building materials.

B. Hanger Materials: Galvanized, sheet steel or round, threaded steel rod. Comply with SMACNA's "HVAC Duct Construction Standards--Metal and Flexible" for sheet steel width and thickness and for steel rod diameters

C. Duct Attachments: Sheet metal screws, blind rivets, or self-tapping metal screws; compatible with duct materials.

PART 3 - EXECUTION

3.1 DUCT FABRICATION

A. General: Fabricate ducts, elbows, transitions, offsets, branch connections, and other construction with galvanized, sheet steel, according to SMACNA's "HVAC Duct Construction Standards--Metal and Flexible." Comply with requirements for metal thickness, reinforcing types and intervals, tie-rod applications, and joint types and intervals.

B. Low Pressure duct

1. Seams and Joints (Rectangular Ducts): Longitudinal seams shall be Pittsburg lock, grooved seams or button punch snap lock. Transverse joints shall be drive slip. Joints 36” and larger shall be manufactured duct joining system with downset corners, or SMACNA T-25 formed on flanges with corner and cleat. Contractor option on smaller sizes

2. Seams and Joints (Concealed Round Duct): Transverse joints in low velocity concealed round ducts shall be slip type secured with sheet metal screws equally spaced on 6” centers maximum with a minimum of three screws per joint. Joints shall be sealed with mastic during joining. Exposed inside edge of duct at joint shall point in direction of airflow. All duct joints exposed to weather shall be caulked weathertight.

3. Seams and joints (Exposed Round Duct): Longitudinal seams shall be lock type spiral or grooved seams rolled spirally. Transverse joints shall be slip type up to 36” in diameter and shall be sealed with mastic during joining. Flanged and gasketed joints shall be used on size larger than 36” diameter.

C. Medium Pressure duct

1. Seams and Joints (Rectangular Ducts): Longitudinal seams shall be grooved seams with sealant and center punched at 12” maximum intervals or Pittsburg lock type with sealant. Transverse joints shall be flanged and gasketed manufactured duct joining system with downset corners bolted corners.

2. Seams and joints (Oval or Round Duct): Longitudinal seams shall be lock type spiral or grooved seams rolled spirally. Transverse joints shall be slip type up to 36” in diameter and shall be sealed with mastic during joining. Flanged and gasketed joints shall be used on size larger than 36” diameter.

3. Duct Seal Requirements: Ductwork shall be sealed per SMACNA Seal Class “B”. Sealant material shall be installed per manufacturer’s recommendations.

D. Rectangular fittings: Construct tees, bends and elbows with centerline radius of 1-1/2 times width of duct.

E. Round Elbows: Fabricate in die-formed, gored, pleated, or mitered construction. Fabricate bend radius of die-formed, gored, and pleated elbows one and one-half times elbow diameter. Unless elbow construction type is indicated, fabricate elbows as follows:

F. Static-Pressure Classifications: Unless otherwise indicated, construct ducts to the following:

1. All duct in mechanical room: Medium Pressure
2. All duct outside mechanical room: Low Pressure.

G. Cross Breaking or Cross Beading: Cross break or cross bead duct sides 19 inches and larger and 0.0359 inch thick or less, with more than 10 sq. ft. of unbraced panel area, unless ducts are lined.

H. Sizes shown on plans are inside clear dimensions. Ductwork utilizing duct liner shall be increased in size to accommodate the duct liner thickness.

## 3.2 DUCT INSTALLATION

A. Drawings indicate general arrangement of ducts, fittings, and accessories. Minor modifications to route, size and shape of duct may be required to meet structural and other interference. Changes which could affect system performance shall be reviewed by Architect/Engineer prior to fabrication or installation of duct.

B. Construct and install each duct system for the specific duct pressure classification indicated.

C. Install ducts with fewest possible joints.

D. Install fabricated fittings for changes in directions, changes in size and shape, and connections.

E. Install couplings tight to duct wall surface with a minimum of projections into duct.

F. Install ducts, unless otherwise indicated, vertically and horizontally, parallel and perpendicular to building lines; avoid diagonal runs.

G. Install ducts close to walls, overhead construction, columns, and other structural and permanent enclosure elements of building.

H. Install ducts with a clearance allowance for insulation thickness.

I. Conceal ducts from view in finished spaces. Do not encase horizontal runs in solid partitions, unless specifically indicated.

J. Coordinate layout with suspended ceiling, fire- and smoke-control dampers, lighting layouts, and similar finished work.

K. Electrical Equipment Spaces: Route ductwork to avoid passing through transformer vaults and electrical equipment spaces and enclosures.

L. Non-Fire-Rated Partition Penetrations: Where ducts pass through interior partitions and exterior walls, and are exposed to view, conceal space between construction opening and duct or duct insulation with sheet metal flanges of same metal thickness as duct. Overlap opening on four sides by at least 1-1/2 inches.

M. Fire-Rated Partition Penetrations: Where ducts pass through interior partitions and exterior walls, install appropriately rated fire damper, sleeve, and firestopping sealant.

## 3.3 SEAM AND JOINT SEALING

A. Low Pressure Ductwork: Seal per SMACNA Seal Class “C”. Sealant material shall be installed per manufacturer’s recommendations.

B. Medium Pressure Ductwork: Seal per SMACNA Seal Class “B”. Sealant material shall be installed per manufacturer’s recommendations

C. Seal externally insulated ducts before insulation installation.

3.4 HANGING AND SUPPORTING

A. Install rigid round, rectangular, and flat-oval metal duct with support systems indicated in SMACNA's "HVAC Duct Construction Standards--Metal and Flexible."

B. Support horizontal ducts within 24 inches of each elbow and within 48 inches of each branch intersection.

C. Support vertical ducts at a maximum interval of 16 feet and at each floor.

3.5 DUCT ACCESSORY INSTALLATION

A. Install duct accessories according to applicable details shown in SMACNA's "HVAC Duct Construction Standards--Metal and Flexible" for metal ducts.

B. Install volume dampers at locations indicated and at all branch take-offs to air outlets and inlets.

C. Provide fire and smoke dampers at locations indicated and where required by applicable codes. Install fire and smoke dampers according to manufacturer's UL-approved written instructions.

D. Provide turning vanes in all mitered elbows and duct turns.

E. Install duct access panels for access to inlet side of coils, equipment, control dampers, fire dampers, and smoke dampers.

F. Final connections to air outlets and terminal units may be made with flexible duct. Install flexible ducts with metal collars or sleeves with draw bands. Length of flexible duct shall not exceed 36”, path shall not exceed 45º.

G. Provide flexible connections to motor driven equipment. Secure fabric to duct or fan collar with 3/16” rivets space not more than 5” on center. Provide thrust restraints so that connections are not in tension with equipment in operation.

H. Install diffusers, registers, and grilles level and plumb, according to manufacturer's written instructions, Coordination Drawings, original design, and referenced standards. Examine areas where diffusers, registers, and grilles are to be installed for compliance with requirements for installation tolerances and other conditions affecting performance of equipment. Do not proceed with installation until unsatisfactory conditions have been corrected.

I. Install gas vents, chimneys, and stacks according to manufacturer's written instructions and NFPA 54. Locate to comply with minimum clearances from combustibles.

3.6 ADJUSTING

A. Adjust volume-control dampers in ducts, outlets, and inlets to achieve design airflow. Refer to Division 23 Section "Testing, Adjusting, and Balancing" for detailed procedures.

B. Adjust duct accessories for proper settings and actions.

3.7 CLEANING

A. After completing system installation, inspect the system. Vacuum ducts before final acceptance to remove dust and debris.

B. After installation of diffusers, registers, and grilles, inspect exposed finish. Clean exposed surfaces to remove burrs, dirt, and smudges. Replace diffusers, registers, and grilles that have damaged finishes.

**END OF SECTION 233113**

**SECTION 233423 - POWER VENTILATORS**

PART 1 - GENERAL

1.1 RELATED DOCUMENTS

A. Drawings and general provisions of the Contract, including General and Supplementary Conditions and Division 1 Specification Sections, apply to this Section.

1.2 SUMMARY

A. This Section includes the following:

1. In-line centrifugal fans.
2. Ceiling-mounting ventilators.

1.3 SUBMITTALS

A. Product Data: Include rated capacities, furnished specialties, and accessories for each type of product indicated and include the following:

1. Certified fan performance curves with system operating conditions indicated.
2. Certified fan sound-power ratings.
3. Motor ratings and electrical characteristics, plus motor and electrical accessories.
4. Material gages and finishes, including color charts.
5. Dampers, including housings, linkages, and operators.

B. Shop Drawings: Detail equipment assemblies and indicate dimensions, weights, loads, required clearances, method of field assembly, components, and location and size of each field connection.

1. Wiring Diagrams: Power, signal, and control wiring. Differentiate between manufacturer-installed and field-installed wiring.

C. Maintenance Data: For power ventilators to include in operation and maintenance manuals.

D. See “Submittal Schedule” located at the end of Section 230100 – General Mechanical Requirements.

1.4 QUALITY ASSURANCE

A. Electrical Components, Devices, and Accessories: Listed and labeled as defined in NFPA 70, Article 100, by a testing agency acceptable to authorities having jurisdiction, and marked for intended use.

B. AMCA Compliance: Products shall comply with performance requirements and shall be licensed to use the AMCA-Certified Ratings Seal.

C. NEMA Compliance: Motors and electrical accessories shall comply with NEMA standards.

D. UL Standard: Power ventilators shall comply with UL 705.

1.5 COORDINATION

A. Coordinate installation of roof curbs, equipment supports, and roof penetrations.

1.6 EXTRA MATERIALS

A. Furnish extra materials described below that match products installed and that are packaged with protective covering for storage and identified with labels describing contents.

1. Belts: One set for each belt-driven unit.

PART 2 - PRODUCTS

2.1 MANUFACTURERS

A. Manufacturers: Subject to compliance with requirements, provide products by one of the following:

1. In-Line Centrifugal Fans:

a. Acme Engineering & Mfg. Corp.
b. Carnes Company HVAC.
c. Cook, Loren Company.
d. Greenheck Fan Corp.
e. ILG Industries, Inc./American Coolair Corp.
f. Penn Ventilation Companies, Inc.

2. Ceiling-Mounting Ventilators:

a. Ammerman Company, Inc./General Resource Corp.
b. Breidert Air Products, Inc.
c. Broan Mfg. Co., Inc.
d. Carnes Company HVAC.
e. Chelsea Fans & Blowers, Inc.
f. Cook, Loren Company.
g. Dayton Electric Manufacturing Co.
h. FloAire, Inc.
i. Greenheck Fan Corp.
j. ILG Industries, Inc./American Coolair Corp.
k. JennFan; Div. of Breidert Air Products, Inc.
l. NuTone Inc.
m. Penn Ventilation Companies, Inc

2.2 IN-LINE CENTRIFUGAL FANS

A. Description: In-line, belt-driven centrifugal fans consisting of housing, wheel, outlet guide vanes, fan shaft, bearings, motor and disconnect switch, drive assembly, mounting brackets, and accessories.

B. Housing: Split, spun aluminum with aluminum straightening vanes, inlet and outlet flanges, and support bracket adaptable to floor, side wall, or ceiling mounting.

C. Belt-Driven Units: Motor mounted on adjustable base, with adjustable sheaves, enclosure around belts within fan housing, and lubricating tubes from fan bearings extended to outside of fan housing.

D. Fan Wheels: Aluminum, airfoil blades welded to aluminum hub.

E. Accessories:

1. Companion Flanges: For inlet and outlet duct connections.
2. Fan Guards: 1/2- by 1-inch mesh of galvanized steel in removable frame. Provide guard for inlet or outlet for units not connected to ductwork.
3. Motor and Drive Cover (Belt Guard): Epoxy-coated steel.

## 2.3 CEILING-MOUNTING VENTILATORS

A. Description: Centrifugal fans designed for installing in ceiling or wall or for concealed in-line applications.

B. Housing: Steel, lined with acoustical insulation.

C. Fan Wheel: Centrifugal wheels directly mounted on motor shaft. Fan shrouds, motor, and fan wheel shall be removable for service.

D. Grille: Plastic, louvered grille with flange on intake and thumbscrew attachment to fan housing.

E. Electrical Requirements: Junction box for electrical connection on housing and receptacle for motor plug-in.

F. Accessories:

1. Variable-Speed Controller: Solid-state control to reduce speed from 100 percent to less than 50 percent.
2. 120 volt thermostat
3. Isolation: Rubber-in-shear vibration isolators.

## 2.4 MOTORS

A. Comply with requirements in Division 23 Section "Basic Mechanical Materials and Methods."

B. Enclosure Type: Guarded dripproof.

## 2.5 SOURCE QUALITY CONTROL

A. Sound-Power Level Ratings: Comply with AMCA 301, "Methods for Calculating Fan Sound Ratings from Laboratory Test Data." Factory test fans according to AMCA 300, "Reverberant Room Method for Sound Testing of Fans." Label fans with the AMCA-Certified Ratings Seal.

B. Fan Performance Ratings: Establish flow rate, pressure, power, air density, speed of rotation, and efficiency by factory tests and ratings according to AMCA 210, "Laboratory Methods of Testing Fans for Rating."

PART 3 - EXECUTION

3.1 INSTALLATION

A. Install power ventilators level and plumb.

B. Secure roof-mounting fans to roof curbs with cadmium-plated hardware.

C. Ceiling Units: Suspend units from structure; use vibration isolating hangers.

D. Support suspended units from structure using threaded steel rods and vibration isolators.

E. Install units with clearances for service and maintenance.

3.2 CONNECTIONS

A. Duct installation and connection requirements are specified in other Division 23 Sections. Drawings indicate general arrangement of ducts and duct accessories. Make final duct connections with flexible connectors.

B. Install ducts adjacent to power ventilators to allow service and maintenance.

3.3 FIELD QUALITY CONTROL

A. Equipment Startup Checks:

1. Verify that shipping, blocking, and bracing are removed.
2. Verify that unit is secure on mountings and supporting devices and that connections to ducts and electrical components are complete. Verify that proper thermal-overload protection is installed in motors, starters, and disconnect switches.
3. Verify that cleaning and adjusting are complete.
4. Disconnect fan drive from motor, verify proper motor rotation direction, and verify fan wheel free rotation and smooth bearing operation. Reconnect fan drive system, align and adjust belts, and install belt guards.
5. Verify lubrication for bearings and other moving parts.
6. Verify that manual and automatic volume control and fire and smoke dampers in connected ductwork systems are in fully open position.
7. Disable automatic temperature-control operators.

B. Starting Procedures:

1. Energize motor and adjust fan to indicated rpm.
2. Measure and record motor voltage and amperage.

C. Operational Test: After electrical circuitry has been energized, start units to confirm proper motor rotation and unit operation. Remove malfunctioning units, replace with new units, and retest.

D. Test and adjust controls and safeties. Replace damaged and malfunctioning controls and equipment.

E. Refer to Division 23 Section "Testing, Adjusting, and Balancing" for testing, adjusting, and balancing procedures.

F. Replace fan and motor pulleys as required to achieve design airflow.

G. Repair or replace malfunctioning units. Retest as specified above after repairs or replacements are made.

3.4 ADJUSTING

A. Adjust damper linkages for proper damper operation.

B. Adjust belt tension.

C. Lubricate bearings.

3.5 CLEANING

A. On completion of installation, internally clean fans according to manufacturer's written instructions. Remove foreign material and construction debris. Vacuum fan wheel and cabinet.

B. After completing system installation, including outlet fitting and devices, inspect exposed finish. Remove burrs, dirt, and construction debris and repair damaged finishes.

3.6 DEMONSTRATION

A. Engage a factory-authorized service representative to train Owner's maintenance personnel to adjust, operate, and maintain power ventilators.

1. Train Owner's maintenance personnel on procedures and schedules for starting and stopping, troubleshooting, servicing, and maintaining equipment and schedules.
2. Review data in maintenance manuals.
3. Schedule training with Owner, through Architect, with at least seven days' advance notice.

**END OF SECTION 233423**

**SECTION 235400 – FAN COIL UNITS**

PART 1 - GENERAL

1.1 RELATED DOCUMENTS

A. Drawings and general provisions of the Contract, including General and Supplementary Conditions and Division 1 Specification Sections, apply to this Section.

1.2 SUMMARY

A. This Section includes the following:

1. Fan coil unit with heat pump coils and electric heating coils.

B. Related Sections include the following:

1. Division 23 Section "Air to Air Heat Pumps" for units used with cooling coils provided in furnaces.

1.3 SUBMITTALS

A. Product Data: For each furnace. Include rated capacities of selected models; shipping, installed, and operating weights; furnished specialties; and accessories. Include plan and elevation views of units, minimum clearances, and data on ratings and capacities.

B. Wiring Diagrams: Power, signal, and control wiring.

C. Operation and Maintenance Data: For each furnace to include in emergency, operation, and maintenance manuals.

D. Warranties: Special warranties specified in this Section.

1.4 QUALITY ASSURANCE

A. Product Options: Drawings indicate size, profiles, and dimensional requirements of furnaces and are based on the specific system indicated. Refer to Division 1 Section "Product Requirements."

B. Electrical Components, Devices, and Accessories: Listed and labeled as defined in NFPA 70, Article 100, by a testing agency acceptable to authorities having jurisdiction, and marked for intended use.

C. Comply with NFPA 70.

1.5 WARRANTY

A. Special Warranty: Manufacturer's standard form in which manufacturer agrees to repair or replace the following components of furnaces that fail in materials or workmanship within specified warranty period:

B. Warranty Period: 5 years from date of Substantial Completion.

1.6 EXTRA MATERIALS

A. Furnish extra materials described below that match products installed and that are packaged with protective covering for storage and identified with labels describing contents.

1. Disposable Air Filters: Furnish two complete sets.

PART 2 - PRODUCTS

2.1 MANUFACTURERS

A. Available Manufacturers: Subject to compliance with requirements, manufacturers offering products that may be incorporated into the Work include, but are not limited to, the manufacturers specified.

1. Armstrong Air Conditioning Inc.
2. Carrier; Div. of United Technologies Corp.
3. Lennox Industries, Inc.
4. Rheem Mfg. Co.; Air Conditioning Div.
5. Ruud Air Conditioning.
6. Trane Company (The).
7. York International Corp.; Unitary Products Group.

2.2 FAN COIL UNITS

A. Description: Factory assembled, piped, wired, and tested.

B. Cabinet: Steel, with interior insulation around heat exchanger. Lift-out panels expose heating elements and all other items requiring access for maintenance.

1. Interior Insulation: Mineral-fiber board thermal insulation manufactured with glass fibers a minimum of 1/2 inch thick, bonded with a thermosetting resin. Comply with ASTM C 612, Type IB, with aluminum foil jacket.

C. Finish of External Casings and Cabinets: Factory painted, manufacturer's standard color.

D. Fan: Centrifugal, factory balanced, resilient mounted, direct drive.

E. Fan Motors: Multitapped, multispeed, with internal thermal protection and permanent lubrication.

F. Electric-Resistant Heating Elements: Helix-wound, nickel-chromium wire-heating elements in ceramic insulators mounted on steel supports.

G. Heating-Element Control: Sequencer relay with relay for each element; switches elements on and off, with delay between each increment; initiates, stops, or changes fan speed.

H. Filters: 2-inch thick, disposable, fiberglass type in sheet metal frame.

2.3 CONTROLS

A. Furnace Controls: Include components required for satisfactory operation of furnaces and auxiliary equipment in all seasons.

B. Control Transformer: 24-V ac output, factory installed, and wired in furnace.

C. Cooling and Heating relays: To start heat pump in cooling or heating mode.

D. Blower Fan Control: Fan on-automatic.

E. Thermostat: 24-V ac, solid-state, programmable, microprocessor-based wall-mounting unit with automatic switching from heating to cooling, preferential rate control, multiple temperature presets selectable by day and time, remote sensor and battery backup protection of program settings against power failure.

1. Provide remote sensors where indicated on drawings.
2. Provide two-stage heating thermostats for units with air-to-air heat pumps.

2.4 COOLING FEATURES

A. Evaporator Coil: Copper tubes mechanically expanded into aluminum fins. Comply with ARI 210/240, "Unitary Air-Conditioning and Air-Source Heat Pump Equipment." Match size with furnace. Match remote condensing unit specified in Division 23 Section "Air Cooled Condensing Units " with type, capacity, pressure-drop ratings, restricted distributor, or expansion valve. Include condensate drain pan with accessible drain outlet.

B. Evaporator Coil Enclosure: Steel, matching furnace and evaporator coil, with access panel and flanges for integral mounting at or on furnace cabinet and galvanized sheet metal drain pan coated with black asphaltic base paint.

C. Refrigerant Line Kits: Annealed-copper suction and liquid lines factory cleaned, dried, pressurized with nitrogen, and sealed. Insulate suction line with minimum 3/8-inch- thick, flexible elastomeric tubular insulation complying with ASTM C 534, Type I. Flared or sweat ends compatible with coil and condensing unit connections.

PART 3 - EXECUTION

3.1 FURNACE INSTALLATION

A. Base-Mounted Units: Secure units to substrate. Provide optional bottom closure base if required by installation conditions.

B. Control Wiring: Install control wiring as required for complete operational system. Route control wiring in conduit. Coordinate with electrical contractor.

3.2 CONNECTIONS

A. Piping installation requirements are specified in other Division 23 Sections. Drawings indicate general arrangement of piping, fittings, and specialties.

B. Connect ducts according to Division 23 Section "Metal Ducts and Accessories."

C. Install piping adjacent to machine to allow service and maintenance.

3.3 ADJUSTING

A. Adjust initial temperature set points.

B. Set controls, burner, and other adjustments for optimum heating performance and efficiency. Adjust heat-distribution features, including shutters, dampers, and relays, to provide optimum heating performance and system efficiency.

3.4 CLEANING

A. After completing installation, clean furnaces internally according to manufacturer's written instructions.

B. Install new filters in each furnace within 14 days after Substantial Completion.

3.5 DEMONSTRATION

A. Engage a factory-authorized service representative to train Owner’s maintenance personnel to adjust, operate, and maintain condensing units. Refer to Division 1 Sections.

**END OF SECTION 235400**

**SECTION 236200 - AIR-TO-AIR HEAT PUMPS**

PART 1 - GENERAL

1.1 RELATED DOCUMENTS

A. Drawings and general provisions of the Contract, including General and Supplementary Conditions and other Division 1 Specification Sections, apply to this Section.

1.2 SUMMARY

A. This Section includes, air-to-air heat pumps 1 to 5 tons.

1.3 SUBMITTALS

A. Product Data: Include rated capacities; shipping, installed, and operating weights; dimensions; required clearances; methods for assembling components; furnished specialties; accessories; and installation and startup instructions for each model indicated.

B. Wiring Diagrams: Detail wiring for power, signal, and control systems and differentiate between manufacturer-installed and field-installed wiring.

C. Maintenance Data: For each condensing unit to include in the maintenance manuals. Include a parts list for each condensing unit, control, and accessory; troubleshooting maintenance guide; and servicing and preventive maintenance procedures and schedule.

D. Warranties: Special warranties specified in this Section.

1.4 QUALITY ASSURANCE

A. Listing and Labeling: Provide electrically operated equipment specified in this Section that is listed and labeled as defined in NFPA 70, Article 100.

B. Comply with NFPA 70.

C. Comply with UL 303, "Refrigeration and Air-Conditioning Condensing and Compressor Units."

1.5 COORDINATION

A. Coordinate installation of concrete bases with general contractor.

1.6 WARRANTY

A. General Warranty: The special warranty specified in this Article shall not deprive the Owner of other rights the Owner may have under other provisions of the Contract Documents and shall be in addition to, and run concurrent with, other warranties made by the Contractor under requirements of the Contract Documents.

B. Special Warranty: A written warranty, executed by Contractor and signed by manufacturer, agreeing to replace components that fail in materials and workmanship within the specified warranty period, provided manufacturer's written instructions for installation, operation, and maintenance have been followed.

1. Warranty Period: Manufacturers standard, but not less than 5 years from date of Substantial Completion.

PART 2 - PRODUCTS

2.1 MANUFACTURERS

A. Manufacturers: Subject to compliance with requirements, provide condensing units by one of the following:

1. Condensing Units, Air Cooled, 1 to 5 Tons:

a. Armstrong Air Conditioning, Inc.
b. Carrier Corp.; Carrier Air Conditioning Div.
c. Lennox International, Inc.; Lennox Industries, Inc. Div.
d. Rheem Mfg. Co.; Air Conditioning Div.
e. Rudd Air Conditioning
f. Trane Co. (The); North American Commercial Group.
g. York International Corp.

2.2 CONDENSING UNITS, AIR COOLED, 1 TO 5 TONS

A. Description: Factory assembled and tested, air cooled; consisting of compressors, condenser coils, fans, motors, refrigerant reservoirs, and operating controls.

B. Compressor: Hermetically sealed and isolated for vibration.

1. Motor: Include thermal- and current-sensitive overload devices, start capacitor, relay, and contactor.

C. Condenser: Copper-tube, aluminum-fin coil, with coil hail guard.

D. Condenser Fan: Direct-drive, aluminum propeller fan; with permanently lubricated fan motor with thermal-overload protection.

E. Accessories include the following:
1. Low ambient kit to permit cooling operation down to 0°F.
2. Crankcase heater.
3. Automatic reset timer to prevent compressor rapid cycle.

F. Refrigerant piping: Annealed-copper suction and liquid lines factory cleaned, dried, pressurized, and sealed, expansion device, service valves, drier, sight glass.

G. Casing: Steel, finished with baked enamel; with removable panels for access to controls, weep holes for water drainage, and mounting holes in base. Mount service valves, fittings, and gage ports on exterior of casing.

H. Motor: NEMA MG 1, general purpose, continuous duty, Design B, single point connection, motor overload protection.

I. Reversing Valve: Reverse direction of refrigerant flow in air-to-air heat pump to change from heating mode to cooling mode.

2.3 SOURCE QUALITY CONTROL

A. Verification of Performance: Rate condensing units according to ARI 210/240.

B. Test and inspect shell and tube condensers according to ASME Boiler and Pressure Vessel Code: Section VIII, "Pressure Vessels," Division 1.

C. Testing Requirements: Factory test sound-power-level ratings according to ARI 270.

PART 3 - EXECUTION

3.1 INSTALLATION

A. Install heat pumps according to manufacturer's written instructions.

B. Install units level and plumb, firmly anchored in locations indicated; maintain manufacturer's recommended clearances.

C. Install ground mounted units on reinforce concrete base. Coordinate site of base with General Contractor.

D. Install roof-mounted units on wood treated timbers. Anchor unit to supports with removable fasteners.

E. Connect refrigerant piping to air-to-air heat pumps; maintain required access to unit. Install furnished field-mounted accessories.

3.2 FIELD QUALITY CONTROL

A. Leak Test: After installation, charge systems with refrigerant and oil and test for leaks. Repair leaks and replace lost refrigerant and oil.

B. Operational Test: After electrical circuitry has been energized, start units to confirm proper operation, product capability, and compliance with requirements.

1. Test and adjust controls and safeties. Replace damaged and malfunctioning controls and equipment.

C. Remove and replace malfunctioning units with new units and retest.

3.3 CLEANING

A. After completing system installation, including outlet fittings and devices, inspect exposed finish. Clean units to remove dirt and construction debris and repair damaged finishes.

3.4 DEMONSTRATION

A. Startup Services: Engage a factory-authorized service representative to train Owner's maintenance personnel as specified below:

1. Train Owner's maintenance personnel on procedures and schedules related to startup and shutdown, troubleshooting, servicing, and preventive maintenance.
2. Review data in the maintenance manuals.

**END OF SECTION 236200**

# SECTION 260100 – GENERAL ELECTRICAL REQUIREMENTS

## PART 1 - GENERAL

### 1.1 RELATED DOCUMENTS

A. Drawings and general provisions of the Contract, including General and Supplementary Conditions apply to this Section.

### 1.2 SUMMARY

A. This Section includes general electrical requirements and shall apply to all phases of the work specified, indicated on the drawings or required to provide for complete installation of electrical systems.

### 1.3 WARRANTIES

A. All materials, workmanship and equipment shall be warranted against defects or against injury from proper and usual wear for a period of one year after the date of substantial completion. Certain equipment shall be warranted beginning at the time of final acceptance or for longer periods of time as specified in those sections of the Project Manual. Any item which becomes defective within the warranty period shall be repaired or replaced, at no additional cost to the Owner.

B. All manufactures warranties shall run to the benefit of the owner. No manufacturer's warranties shall be voided or impaired.

C. Warranty shall include repair of faulty workmanship.

### 1.4 ALTERNATES

A. Alternates, if required, shall be as described in the "Alternates" section of this specification, as described on the proposal form or as indicated on the drawings.

### 1.5 INTERPRETATION OF DOCUMENTS

A. Any questions regarding the meaning of any portion of the contract documents shall be submitted to the Architect/Engineer for interpretation. Addenda or supplemental information will publish definitive interpretations or clarification. Verbal interpretation not issued by addendum or supplemental information shall not be considered part of the contract documents.

B. The Architect/Engineer shall be the sole judge of interpretations of discrepancies within the contract documents.

C. If ambiguities should appear in the contract documents, the Contractor shall request clarification from the Architect/Engineer before proceeding with the work. If the Contractor fails to make such request, no excuse will thereafter be entertained for failure to carry out the work in a manner satisfactory to the Architect/Engineer. Should a conflict occur within the contract documents, the Contractor is deemed to have estimated the more expensive way of doing the work unless a written clarification from the Architect/Engineer was requested and obtained before submission of proposed methods or materials.

1.6 DEFINITIONS ABREVIATIONS

A. The following shall apply throughout the contract documents

| | | |
|---|---|---|
| 1. | Code | All applicable national state and local codes |
| 2. | Furnish | Supply and deliver to site ready for installation |
| 3. | Indicated | Noted, scheduled or specified |
| 4. | Provide | Furnish, install and connect complete and ready for final use by owner |
| 5. | ADA | Americans with Disabilities Act |
| 6. | ANSI | American National Standards Institute |
| 7. | ASTM | American Society for Testing and Materials |
| 8. | FM | Factory Mutual System |
| 9. | IRI | HSB Industrial Risk Insurers |
| 10. | NEC | National Electric Code (NFPA 70) |
| 11. | NEMA | National Electrical Manufacturers Association |
| 12. | NFPA | National Fire Protection Association |
| 13. | UL | Underwriters Laboratories Inc. |

1.7 CODES AND STANDARDS

A. All work shall be performed by competent craftsmen skilled in the trade involved and shall be done in a manner consistent with normal industry standards.

B. All work shall conform to the currently adopted edition of the National Electric Code (NEC), Local Building Code, Unified Facilities Criteria (UFC) and all other applicable Offutt Air Force Base codes or standards.

C. Where there is a conflict between the code and the contract documents, the code shall have precedence only then it is more stringent than the contract documents. Items that are allowed by the code but are less stringent than those specified shall not be substituted.

1.8 PERMITS

A. Contractor shall become familiar and comply with all requirements regarding permits, fees, licenses, etc. All permits, licenses, inspections and arrangements required for the work shall be obtained by Contractor's effort and expense. All utilities shall be installed in accordance with the local rules and regulations and all charges shall be paid by the Contractor. Capital facilities fees will be paid by owner.

1.9 OPERATION AND MAINTENANCE MANUALS

A. Assemble three (3) complete sets of operation and maintenance data indicating the operation and maintenance of each system, subsystem, and piece of equipment not part of a system. Include operation and maintenance data required in individual Specification Sections and as follows:

1. Operation Data:

a. Emergency instructions and procedures.
b. System, subsystem, and equipment descriptions, including operating standards.
c. Operating procedures, including startup, shutdown, seasonal, and weekend operations.
d. Description of controls and sequence of operations.
e. Piping and wiring diagrams.

2. Maintenance Data:

a. Manufacturer's information, including list of spare parts.
b. Name, address, and telephone number of installer or supplier.
c. Maintenance procedures.
d. Maintenance and service schedules for preventive and routine maintenance.
e. Maintenance record forms.
f. Sources of spare parts and maintenance materials.
g. Copies of maintenance service agreements.
h. Copies of warranties and bonds.

B. Organize operation and maintenance manuals into suitable sets of manageable size. Bind and index data in heavy-duty, 3-ring, vinyl-covered, loose-leaf binders, in thickness necessary to accommodate contents, with pocket inside the covers to receive folded oversized sheets. Identify each binder on front and spine with the printed title "OPERATION AND MAINTENANCE MANUAL," Project name, and subject matter of contents.

1.10 PROJECT RECORD DOCUMENTS

A. Record Drawings: Maintain and submit one set of blue- or black-line white prints of Contract Drawings and Shop Drawings.

1. Mark Record Prints to show the actual installation where installation varies from that shown originally.
2. Mark record sets with erasable, red-colored pencil. Use other colors to distinguish between changes for different categories of the Work at the same location.
3. Mark important additional information that was either shown schematically or omitted from original Drawings.
4. Note Construction Change Directive numbers, Change Order numbers, alternate numbers, and similar identification where applicable.
5. Identify and date each Record Drawing; include the designation "PROJECT RECORD DRAWING" in a prominent location.

B. Record Specifications: Submit one copy of Project's Specifications, including addenda and contract modifications. Mark copy to indicate the actual product installation where installation varies from that indicated in Specifications, addenda, and contract modifications.

C. Record Product Data: Submit one copy of each Product Data submittal. Mark one set to indicate the actual product installation where installation varies substantially from that indicated in Product Data.

## PART 2 - PRODUCTS

### 2.1 MATERIALS

A. All materials and equipment used in the construction of the project shall be new unused and undamaged unless otherwise specified. Materials and equipment shall be of latest design standards of manufacturer specified.

B. Materials and equipment are limited by the requirements of the contract documents. Material and equipment shall be provided in accordance with the following:

1. Basis of Design Products: Basis of Design Products are those products around which the project was designed in terms of capacity, performance, physical size and quality. Basis of Design Products shall be provided unless substitutions are made in accordance with this specification.

2. Substitutions: Substitutions are product of manufacturers other than listed as Basis of Design. Substitutions shall meet each of the following requirements. Products not meeting these requirements shall be subject to prior approval.

a. The product shall be manufactured by one of the acceptable manufacturers listed in the contract documents.

b. The product shall meet or exceed the requirements of the contract documents in terms of quality, performance, suitability, appearance and characteristics.

c. The contractor providing the substitution shall bear the total cost of all changes due to substitutions. These may include but are not limited to redesign costs and increased work by other contractors or the owner.

d. The Architect/Engineer shall be the sole judge of the suitability of the substitution items.

C. Verify installation details and requirements for materials and equipment furnished by others and installed under this contract.

## PART 3 - EXECUTION

### 3.1 DEMONSTRATION AND TRAINING

A. Instruction: Instruct Owner's personnel to adjust, operate, and maintain systems, subsystems, and equipment not part of a system. Provide 4 hours training in up to two separate sessions.

1. Provide instructors experienced in operation and maintenance procedures.
2. Provide instruction at mutually agreed-on times. For equipment that requires seasonal operation, provide similar instruction at the start of each season.
3. Schedule training with Owner and Architect/Engineer with at least seven days' advance notice.

### 3.2 STARTING AND ADJUSTING

A. Start and test all equipment and operating components to confirm proper operation. Test and adjust all systems to achieve designed capacity and performance.

B. Provide three (3) copies of all test report to the Architect/Engineer for review prior to date of substantial completion.

C. All equipment and systems discrepancies shall be corrected prior to final acceptance.

3.3 TEMPORARY POWER AND LIGHTING

A. Electric Power Service: Provide temporary electric power from local utility with metering and with payment of use charges.

B. Electric Distribution: Provide receptacle outlets adequate for connection of power tools and construction equipment.

C. Lighting: Provide temporary lighting with local switching that provides adequate illumination for construction operations and traffic conditions.

**END OF SECTION 260100**

# SECTION 260500 - BASIC ELECTRICAL MATERIALS AND METHODS

## PART 1 - GENERAL

### 1.1 RELATED DOCUMENTS

A. Drawings and general provisions of the Contract, including General and Supplementary Conditions and Division 1 Specification Sections, apply to this Section.

### 1.2 SUMMARY

A. This Section includes the following basic electrical materials and methods and shall apply to all phases of the work specified, indicated on the drawings or required to provide for complete installation of electrical systems.

1. Raceways.
2. Building wire and connectors.
3. Supporting devices for electrical components.
4. Outlet boxes.
5. Electrical identification.
6. Cutting and patching for electrical construction.
7. Fire Stopping
8. Touchup painting.

### 1.3 DEFINITIONS

A. EMT: Electrical metallic tubing.

B. FMC: Flexible metal conduit.

C. IMC: Intermediate metal conduit.

D. LFMC: Liquidtight flexible metal conduit.

E. RNC: Rigid nonmetallic conduit.

### 1.4 QUALITY ASSURANCE

A. Electrical Components, Devices, and Accessories: Listed and labeled as defined in NFPA 70, Article 100, by a testing agency acceptable to authorities having jurisdiction, and marked for intended use.

B. Comply with NFPA 70.

### 1.5 COORDINATION

A. Coordinate chases, slots, inserts, sleeves, and openings with general construction work and arrange in building structure during progress of construction to facilitate the electrical installations that follow.

1. Set inserts and sleeves in poured-in-place concrete, masonry work, and other structural components as they are constructed.

B. Sequence, coordinate, and integrate installing electrical materials and equipment for efficient flow of the Work. Coordinate installing large equipment requiring positioning before closing in the building.

C. Coordinate location of access panels and doors for electrical items that are concealed by finished surfaces.

D. Where electrical identification devices are applied to field-finished surfaces, coordinate installation of identification devices with completion of finished surface.

E. Where electrical identification markings and devices will be concealed by acoustical ceilings and similar finishes, coordinate installation of these items before ceiling installation.

F. Motors, equipment, controls, etc. shall be furnished, mounted and connected according to the following schedule unless otherwise noted (E =Electrical Contractor, M =Mechanical Contractor):

| Item | Furnished By | Set in place or mounted by | Power wiring and connection by | Control Wiring and connection by |
|---|---|---|---|---|
| 1) Equipment Motors | M | M | E | M |
| 2) Magnetic Motor Starters: | | | | |
| a) Automatically controlled, with or without HOA switches. | E | E | E | M |
| b) Automatically controlled, with or without HOA switches and furnished as part of factory-wired mechanical equipment | M | M | E | M |
| c) Manually controlled | E | E | E | --- |
| d) Manually controlled and furnished as part of factory-wired mechanical equipment | M | M | E | --- |
| 3) Disconnect switches, thermal overload switches, manual operating switches | | | | |
| a) Furnished as part of factory wired mechanical equipment | M | M | E | -- |
| b) Loose mounted | E | E | E | -- |
| 4) Transformers | | | | |
| a) Serving 24 Volt control power | M(1) | M | E | M |
| 5) Contactors | E | E | E | E |
| 6) Push-button stations, pilot lights | E | E | E | E |
| 7) Multi-speed switches | | | | |
| a) Furnished with equipment | M | E | E | M |
| 8) Line voltage thermostats and time clocks. | E | E | E | E |
| 9) Low voltage controls and thermostats | M | M | M | M (2) |
| 10) Motorized control valves, damper motors, solenoid valves, etc. | | | | |
| a) Line Voltage | M | M | E | M |
| b) Low Voltage | M | M | M | M |
| 11) Factory pre-wired control/power panels including remote sensing devices | M | M | E | M(3) |
| 12) Electric wall and unit heaters | E | E | E | E |
| 13) Fire protection controls | M | M | E | E |

| | | | | |
|---|---|---|---|---|
| 14) Fire Smoke Dampers | | | | |
| a) At air handling unit (24 Volt) | M | M | M | M |
| b) In space (120 Volt) | M | M | E | E(4) |
| 15) Fire and smoke detectors including relays for fan shutdown | E | E | E | E(5) |

Notes:

1. When control power is not available, mechanical contractor shall provide control transformers as required to power all valves, dampers, etc.
2. Conduit rough-in for thermostats by electrical contractor.
3. Fan coil units and heat pumps control wiring including wiring of remote sensors by mechanical. Control circuit feeders by mechanical unless shown otherwise.
4. Smoke dampers will be specified as 115 volt (verify) with wiring by Electrical Contractor and control from the fire alarm panel. Smoke detectors furnished by electrical contractor are required to make dampers operate.
5. Wiring from alarm contacts to alarm system by Electrical; control function wiring by Mechanical.

## 1.6 DELIVERY, STORAGE, AND HANDLING

A. Each contractor shall make provisions for delivery and safe storage of materials. Materials shall be delivered in a timely manner to expedite the work.

B. Protect stored piping, supplies and equipment from cold, moisture and dirt. Elevate above grade. Do not exceed structural capacity of floor, if stored inside.

# PART 2 - PRODUCTS

## 2.1 RACEWAYS

A. EMT: ANSI C80.3, zinc-coated steel, with steel or cast set-screw or compression fittings.

B. FMC: Zinc-coated steel.

C. IMC: ANSI C80.6, zinc-coated steel, with threaded fittings.

D. LFMC: Zinc-coated steel with sunlight-resistant and mineral-oil-resistant plastic jacket.

E. RNC: NEMA TC 2, Schedule 40 PVC, with NEMA TC3 fittings.

F. Raceway Fittings: Specifically designed for the raceway type with which used.

## 2.2 CONDUCTORS

A. Conductors, No. 10 AWG and Smaller: Solid or stranded copper.

B. Conductors, Larger Than No. 10 AWG: Stranded copper.

C. Insulation: Thermoplastic, rated at 75 deg C minimum.

D. Wire Connectors and Splices: Units of size, ampacity rating, material, type, and class suitable for service indicated.

E. Unless otherwise indicated on the drawings, circuits are to be 20 amps with #12 AWG wire.

F. A green ground shall be installed with all branch and feeder circuits. Unless otherwise indicated on the drawings, ground wires are to be #12 AWG.

G. All multi-wire branch circuits serving receptacle loads shall include a #10 (heavy neutral) conductor.

## 2.3 SUPPORTING DEVICES

A. Material: Cold-formed steel, with corrosion-resistant coating acceptable to authorities having jurisdiction.

B. Metal Items for Use Outdoors or in Damp Locations: Hot-dip galvanized steel.

C. Slotted-Steel Channel Supports: Flange edges turned toward web, and 9/16-inch- diameter slotted holes at a maximum of 2 inches o.c., in webs.

D. Raceway and Cable Supports: Manufactured clevis hangers, riser clamps, straps, threaded C-clamps with retainers, ceiling trapeze hangers, wall brackets, and spring-steel clamps or click-type hangers.

E. Pipe Sleeves: ASTM A 53, Type E, Grade A, Schedule 40, galvanized steel, plain ends.

F. Expansion Anchors: Carbon-steel wedge or sleeve type.

G. Toggle Bolts: All-steel springhead type.

H. Powder-Driven Threaded Studs: Heat-treated steel.

## 2.4 BOXES

A. Hollow wall and ceiling spaces: Outlet boxes for concealed applications shall be 4” square with single or multiple gang plaster ring in round or square configuration to match the device or fixture being installed. Depth of ring shall be selected so that face of ring is recessed back from face of finished surface by approximately 1/8”.

B. Masonry walls: Outlet boxes in masonry walls shall be 4” square with single or multiple gang masonry rings with square edges. Masonry boxes may also be used where 4” square boxes are impractical. Slush boxes in place to prevent movement with in walls. Flush mounted boxes and conduit are to be used unless otherwise indicated.

C. Exposed Exterior boxes: Where exposed boxes are required, they shall be the cast type with threaded hubs and gasketed covers. Use of these boxes is by approval only. Flush mounted boxes and conduit are to be used unless otherwise indicated.

D. Interior junction boxes: Interior junction boxes shall be 4” square minimum with knock outs as required. Larger boxes may be required and shall be sized per NEC. Provide a flat steel coverplate.

E. Specialty junction boxes larger than 4 11/16”: Junction and pull boxes shall be sized per NEC and arranged to facilitate pulling or splicing. Boxes shall be steel without knock outs, with hinged or screw on cover plates.

F. Floor boxes: See “Wiring Devices” or the drawings.

## 2.5 ELECTRICAL IDENTIFICATION

A. Underground Warning Tape: Permanent, bright-colored, continuous-printed, vinyl tape with the following features:

1. Not less than 6 inches wide by 4 mils thick.
2. Compounded for permanent direct-burial service.
3. Embedded continuous metallic strip or core.
4. Printed legend that indicates type of underground line.

B. Tape Markers for Wire: Vinyl or vinyl-cloth, self-adhesive, wraparound type with preprinted numbers and letters.

C. Engraved-Plastic Labels, Signs, and Instruction Plates: Engraving stock, melamine plastic laminate punched or drilled for mechanical fasteners 1/16-inch minimum thickness for signs up to 20 sq. in. and 1/8-inch minimum thickness for larger sizes. Engraved legend in black letters on white background.

## 2.6 ACCESS DOORS

A. Prime Coated 14 gauge steel, flush, with screw driver operated cam lock. Frame to accommodate construction type; size as indicated.

## 2.7 TOUCHUP PAINT

A. For Equipment: Equipment manufacturer's paint selected to match installed equipment finish.

B. Galvanized Surfaces: Zinc-rich paint recommended by item manufacturer.

# PART 3 - EXECUTION

## 3.1 UTILITY COORDINATION

A. Utility locations indicated on drawings are approximate and the most accurate information available at the time of design. Prior to equipment and conduit installation, the contractor shall coordinate exact installation details and modify work plan accordingly to meet utility requirements. Correspond with utility company prior to any site development that may impact the installation such as irrigation installation, concrete or asphalt installation, landscaping, etc.

B. Contact utility locating services prior to digging.

## 3.2 ELECTRICAL EQUIPMENT INSTALLATION

A. Headroom Maintenance: If mounting heights or other location criteria are not indicated, arrange and install components and equipment to provide the maximum possible headroom.

B. Materials and Components: Install level, plumb, and parallel and perpendicular to other building systems and components, unless otherwise indicated.

C. Equipment: Install to facilitate service, maintenance, and repair or replacement of components. Connect for ease of disconnecting, with minimum interference with other installations.

D. Right of Way: Give to raceways and piping systems installed at a required slope.

3.3 RACEWAY APPLICATION

A. Use the following raceways for outdoor installations:

1. Exposed: IMC.
2. Underground: RNC.
3. Boxes and Enclosures: NEMA 250, Type 3R or Type 4.

B. Use the following raceways for indoor installations:

1. Exposed: EMT.
2. Concealed: EMT.
3. Connection to Vibrating Equipment: FMC; except in wet or damp locations, use LFMC.
4. Boxes and Enclosures: NEMA 250, Type 1, unless otherwise indicated.

3.4 RACEWAY SUPPORT

A. In general, use the following support methods for outdoor installations:

1. Individual exposed conduit: 1" and smaller; 2 hole straps.
2. Individual exposed conduit: 1-1/4" and larger; Minerallac.
3. Paired individual exposed conduit: Minerallac.
4. Rack exposed conduit: Unistrut with strut straps.
5. Concealed in concrete pour: Approved iron tie wire.

B. In general, use the following support methods for indoor installations:

1. Individual exposed conduit: 1" and smaller; 2 hole straps.
2. Individual exposed conduit: 1-1/4" and larger; Minerallac.
3. Individual lighting and power above lay-in ceilings: Dedicated ceiling wire with Caddy clips.
4. Racked exposed or concealed conduit: Unistrut with strut.

C. Install support devices to securely and permanently fasten and support electrical components.

D. Install individual and multiple raceway hangers and riser clamps to support raceways. Provide U-bolts, clamps, attachments, and other hardware necessary for hanger assemblies and for securing hanger rods and conduits.

E. Size supports for multiple raceway installations so capacity can be increased by a 25 percent minimum in the future.

F. Install 1/4-inch diameter or larger threaded steel hanger rods, unless otherwise indicated.

G. Separately support cast boxes that are threaded to raceways and used for fixture support. Support sheet-metal boxes directly from the building structure or by bar hangers. If bar hangers are used, attach bar to raceways on opposite sides of the box and support the raceway with an approved fastener not more than 24 inches from the box.

H. Install metal channel racks for mounting cabinets, panelboards, disconnect switches, control enclosures, pull and junction boxes, transformers, and other devices unless components are mounted directly to structural elements of adequate strength. Use factory hardware for all connections and assemblies including 45 and 90 degree attachment hardware.

I. Install sleeves for cable and raceway penetrations of concrete slabs and walls unless core-drilled holes are used. Install sleeves for cable and raceway penetrations of masonry and fire-rated gypsum walls and of all other fire-rated floor and wall assemblies. Install sleeves during erection of concrete and masonry walls.

J. Install PVC sleeves for ground cable riser penetrations of concrete slabs. Where ground wires are run through metal sleeves use grounding bushings on both ends of the conduit or sleeve.

K. Securely fasten electrical items and their supports to the building structure, unless otherwise indicated. Perform fastening according to the following unless other fastening methods are indicated:

1. Masonry: Toggle bolts on hollow masonry units and expansion bolts on solid masonry units.
2. New Concrete: Concrete inserts with machine screws and bolts.
3. Light Steel: Sheet-metal screws.
4. Fasteners: Select so the load applied to each fastener does not exceed 25 percent of its proof-test load.

## 3.5 RACEWAY AND CABLE INSTALLATION

A. Conceal raceways and cables, unless otherwise indicated, within finished walls, ceilings, and floors.

B. Install raceways and cables at least 6 inches away from parallel runs of flues or hot-water pipes. Locate horizontal raceway runs above water piping.

C. Use temporary raceway caps to prevent foreign matter from entering.

D. Make conduit bends and offsets so ID is not reduced. Keep legs of bends in the same plane and straight legs of offsets parallel, unless otherwise indicated.

E. Use raceway and cable fittings compatible with raceways and cables and suitable for use and location.

F. Install raceways embedded in slabs in middle third of slab thickness where practical, and leave at least 2-inch concrete cover. Do not displace more than 1/3 of the concrete thickness of the slab. For example, if the slab thickness is 3”, maximum conduit size is to be 1” OD.

1. Secure raceways to reinforcing rods to prevent sagging or shifting during concrete placement.
2. Where multiple raceways are run in an area, space raceways laterally to prevent voids in concrete. Fan out conduit runs for a minimum spacing of no less than 3 times the diameter of the larger conduit in a group. Do not place conduits within 12” of supporting beams, walls and columns.
3. Install conduit larger than 1-inch trade size parallel to or at right angles to main reinforcement. Where conduit is at right angles to reinforcement, place conduit close to slab support.
4. Where floor finish is to be exposed concrete, avoid excessive underfloor conduits and maximize cover over conduits to avoid floor cracking.
5. Transition from nonmetallic tubing to Schedule 80 nonmetallic conduit, rigid steel conduit, or IMC before rising above floor.

G. Make bends in exposed parallel or banked runs from same centerline to make bends parallel. Use factory elbows only where elbows can be installed parallel; otherwise, provide field bends for exposed parallel raceways.

H. Install pull wires in empty raceways. Use No. 14 AWG zinc-coated steel or monofilament plastic line with not less than 200-lb tensile strength. Leave at least 12 inches of slack at each end of the pull wire.

I. Install interior telephone and signal system raceways in maximum lengths of 150 feet and with a maximum of two 90-degree bends or equivalent. Separate lengths with pull or junction boxes where necessary to comply with these requirements, in addition to requirements above.

J. Install exterior telephone and signal system raceways in maximum lengths of 500 feet and with a minimal number of 90-degree bends.

K. Utilize sweep elbows for all telephone and signal system raceways 2” and larger.

L. Connect motors and equipment subject to vibration, noise transmission, or movement with a maximum of 72-inch flexible conduit. Install LFMC in wet or damp locations.

M. All conduits routed through unfinished spaces shall be routed as high as possible to avoid future conflicts with build out.

N. Route conduits parallel to building structural members in a neat and orderly manner.

O. Set floor boxes level and trim after installation to fit flush to finished floor surface.

## 3.6 WIRING METHODS FOR POWER, LIGHTING, AND CONTROL CIRCUITS

A. Feeders: Type THHN/THWN insulated conductors in raceway.

B. Underground Feeders and Branch Circuits: Type THWN in raceway.

C. Branch Circuits: Type THHN/THWN insulated conductors in raceway.

## 3.7 WIRING INSTALLATION

A. Install splices and taps that are compatible with conductor material and that possess equivalent or better mechanical strength and insulation ratings than unspliced conductors.

B. Install wiring at outlets with at least 12 inches of slack conductor at each outlet.

C. Connect outlet and component connections to wiring systems and to ground. Tighten electrical connectors and terminals, according to manufacturer's published torque-tightening values.

## 3.8 POSITION OF DEVICE OUTLETS

A. Outlets shall be installed at the height indicated below unless otherwise noted. All heights of outlets are measured from finished floor to centerline of device. Heights may be adjusted as necessary to clear wall mounted cabinets, fin tube convectors, unit heaters, etc. Where installed in masonry walls, mounting heights may be adjusted to correspond to block coursing. In no case shall outlets be mounted below 15” or switches above 48”:

| | | |
|---|---|---|
| 1. | Wall switches | 44” |
| 2. | Receptacle outlet (general) | 16” |
| 3. | Receptacle outlet (kitchen, equipment room, | |

| | | |
|---|---|---|
| | countertops, etc.) | 44” |
| 4. | Communications outlet | 16” |
| 5. | Communication system call station | 48” |
| 5. | Fire alarm signals | 82” or 6” below ceiling, (whichever is lower) |
| 6. | Fire alarm pull stations | 48” |
| 7. | Exit lights | 4” between top of door frame and bottom of exit light where possible |

## 3.9 ELECTRICAL IDENTIFICATION

A. Install at locations for most convenient viewing without interference with operation and maintenance of equipment.

B. Coordinate names, abbreviations, colors, and other designations used for electrical identification with corresponding designations indicated in the Contract Documents or required by codes and standards. Use consistent designations throughout Project.

C. Self-Adhesive Identification Products: Clean surfaces before applying.

D. Tag and label circuits designated to be extended in the future. Identify source and circuit numbers in each cabinet, pull and junction box, and outlet box. Color-coding may be used for voltage and phase identification.

E. Install continuous underground plastic markers during trench backfilling, for exterior underground power, control, signal, and communication lines located directly above power and communication lines. Locate 6 to 8 inches below finished grade or as required by NEC code. If width of multiple lines installed in a common trench or concrete envelope does not exceed 16 inches, overall, use a single line marker.

F. Color-code 208/120-V system secondary service, feeder, and branch-circuit conductors throughout the secondary electrical system as follows:

1. Phase A: Black.
2. Phase B: Red.
3. Phase C: Blue.
4. Neutral: White.
5. Ground: Green.

## 3.10 FIRESTOPPING

A. Apply firestopping to cable and raceway penetrations of fire-rated floor and wall assemblies to achieve fire-resistance rating of the assembly.

B. Where electrical outlets are to be installed in fire rated walls, provide FlameSafe FSP1077 putty pads or equal to maintain adequate fire rating.

## 3.11 CONCRETE BASES

A. Construct concrete bases of dimensions indicated, but not less than 3-1/2 inches larger, in both directions, than supported unit. Follow supported equipment manufacturer's anchorage recommendations and setting templates for anchor-bolt and tie locations, unless otherwise indicated. Use 3000-psi, 28-day compressive-strength concrete and reinforcement.

## 3.12 CUTTING AND PATCHING

A. Cut, channel, chase, and drill floors, walls, partitions, ceilings, and other surfaces necessary for electrical installations. Perform cutting by skilled mechanics of trades involved.

B. Repair cut surfaces to match adjacent surfaces.

## 3.13 CONSTRUCTION LAYOUT

A. Layout work in advance of installation using data and measurements from the site, the appropriate architectural and structural drawings and shop drawings.

B. Confirm adequate clearance for installation, operation, maintenance and code required clearance including items installed by other contractors.

C. If layout to provide clearance is not possible, promptly notify Architect/Engineer for clarification.

## 3.14 DATA AND MEASUREMENTS

A. The data given herein and on the drawings is as accurate as could be secured. The existence and location of construction as indicated is not guaranteed. Before beginning work investigate and verify the existence and location of items affecting work. Obtain exact locations, measurements, levels, etc., at the site and adapt work to actual conditions.

B. Only Architectural drawings, Structural drawings, and site measurements may be utilized in calculations. Mechanical and electrical drawings are diagrammatic or schematic.

## 3.15 FIELD QUALITY CONTROL

A. Inspect installed components for damage and faulty work, including the following:

1. Raceways.
2. Building wire and connectors.
3. Supporting devices for electrical components.
4. Electrical identification.
5. Concrete bases.
6. Cutting and patching for electrical construction.
7. Touchup painting.

## 3.16 REFINISHING AND TOUCHUP PAINTING

A. Refinish and touch up paint.

1. Clean damaged and disturbed areas and apply primer, intermediate, and finish coats to suit the degree of damage at each location.
2. Follow paint manufacturer's written instructions for surface preparation and for timing and application of successive coats.
3. Repair damage to galvanized finishes with zinc-rich paint recommended by manufacturer.
4. Repair damage to PVC or paint finishes with matching touchup coating recommended by manufacturer.

3.17 CLEANING AND PROTECTION

A. On completion of installation, including outlets, fittings, and devices, inspect exposed finish. Remove burrs, dirt, paint spots, and construction debris.

B. Protect equipment and installations and maintain conditions to ensure that coatings, finishes, and cabinets are without damage or deterioration at time of Substantial Completion.

**END OF SECTION 260500**

**SECTION 262416 - PANELBOARDS**

PART 1 - GENERAL

1.1 RELATED DOCUMENTS

A. Drawings and general provisions of the Contract, including General and Supplementary Conditions and Division 1 Specification Sections, apply to this Section.

1.2 SUMMARY

A. This Section includes load centers and panelboards, overcurrent protective devices, TVSS devices, and associated auxiliary equipment rated 600V and less for the following types:

1. Lighting and appliance branch-circuit panelboards.
2. Distribution panelboards.

B. Related Sections include the following:

1. Division 26 Section "General Electrical Requirements."
2. Division 26 Section "Basic Electrical Materials and Methods."

1.3 SUBMITTALS

A. Product Data: For each type of panelboard, overcurrent protective device, TVSS device, accessory, and component indicated. Include dimensions and manufacturers' technical data on features, performance, electrical characteristics, ratings, and finishes.

B. Shop Drawings: For each panelboard and related equipment.

1. Dimensioned plans, elevations, sections, and details. Show tabulations of installed devices, equipment features, and ratings. Include the following:

a. Enclosure types and details for types other than NEMA 250, Type 1.
b. Panel designation (same as on drawings).
c. Bus configuration, current, and voltage ratings.
d. Short-circuit current rating of panelboards and overcurrent protective devices.
e. UL listing for series rating of installed devices.
f. Features, characteristics, ratings, and factory settings of individual overcurrent protective devices, TVSS devices, and auxiliary components.
g. Accessories (ground bar, contactor, door lock, etc.)
h. Mounting (flush or surface).

2. Wiring Diagrams: Diagram power, signal, and control wiring and differentiate between manufacturer-installed and field-installed wiring.

C. Maintenance Data: For panelboards and components to include in maintenance manuals specified in Division 1. In addition to requirements specified in Division 1 Section "Contract Closeout," include the following:

1. Manufacturer's written instructions for testing and adjusting overcurrent protective devices.
2. Time-current curves, including selectable ranges for each type of overcurrent protective device.
3. Required service intervals for TVSS devices and source of replacement parts

1.4 COORDINATION

A. Coordinate layout and installation of panelboards and components with other construction that penetrates walls or is supported by them, including electrical and other types of equipment, raceways, piping, and encumbrances to workspace clearance requirements.

1.5 EXTRA MATERIALS

A. Keys: Four spares of each type of panelboard cabinet lock.

PART 2 - PRODUCTS

2.1 MANUFACTURERS

A. Manufacturers: Subject to compliance with requirements, provide products by one of the following:

1. Panelboards, Overcurrent Protective Devices, Controllers, Contactors, and Accessories:
   a. Eaton Corp.; Cutler-Hammer Products.
   b. General Electric Co.; Electrical Distribution & Control Div.
   c. Siemens Energy & Automation, Inc.
   d. Square D Co.
2. External Mounted TVSS Devices
   a. Advanced Protection Technologies
   b. Joslyn

2.2 FABRICATION AND FEATURES

A. Enclosures: Surface mounted cabinets. NEMA PB 1, Type 1, to meet environmental conditions at installed location.

B. Front: Secured to box with concealed trim clamps. For surface-mounted fronts, match box dimensions; for flush-mounted fronts, overlap box.

C. Hinged Front Cover: Entire front trim hinged to box and with standard door within hinged trim cover.

D. Finish: Manufacturer's standard enamel finish over corrosion-resistant treatment or primer coat.

E. Directory Card: With transparent protective cover, mounted inside metal frame, inside panelboard door.

F. Bus: Hard-drawn copper, 98 percent conductivity.

G. Main and Neutral Lugs: Mechanical type suitable for use with conductor material.

H. Equipment Ground Bus: Adequate for feeder and branch-circuit equipment ground conductors; bonded to box.

I. Service Equipment Label: UL labeled for use as service equipment for panelboards with main service disconnect switches.

J. Future Devices: Mounting brackets, bus connections, and necessary appurtenances required for future installation of devices.

K. Feed-through Lugs: Mechanical type suitable for use with conductor material. Locate at opposite end of bus from incoming lugs or main device.

## 2.3 PANELBOARD SHORT-CIRCUIT RATING

A. UL label indicating series-connected rating with integral or remote upstream devices. Include size and type of upstream device allowable, branch devices allowable, and UL series-connected short-circuit rating.

B. Fully rated to interrupt symmetrical short-circuit current available at terminals.

## 2.4 LIGHTING AND APPLIANCE BRANCH-CIRCUIT PANELBOARDS

A. Branch Overcurrent Protective Devices: Bolt-on circuit breakers, replaceable without disturbing adjacent units.

B. Doors: Front mounted with concealed hinges; secured with flush latch with tumbler lock; keyed alike.

C. Load center construction shall not be acceptable.

## 2.5 DISTRIBUTION PANELBOARDS

A. Doors: Front mounted, except omit in fused-switch panelboards; secured with vault-type latch with tumbler lock; keyed alike.

B. Main Overcurrent Protective Devices: Circuit breaker

C. Branch overcurrent protective devices shall be one of the following:

1. For Circuit-Breaker Frame Sizes 125 A and Smaller: Bolt-on circuit breakers.
2. For Circuit-Breaker Frame Sizes Larger Than 125 A: Bolt-on circuit breakers; plug-in circuit breakers where individual positive-locking device requires mechanical release for removal.

D. Lighting and appliance branch-circuit panelboard construction shall not be acceptable.

## 2.6 TRANSIENT VOLTAGE SURGE SUPPRESSION (TVSS)

A. IEEE C62.41, UL 1449 Second Edition Listed, plug-in style, solid-state, parallel-connected, sine-wave tracking suppression and filtering modules with front panel status display.

B. Minimum single-impulse current rating, all protection modes:

1. Minimal Exposure: 100,000 amps per phase, 50,000 amps per mode.

C. Protection modes:

1. Line to line
2. Line to neutral.
3. Line to ground.
4. Neutral to ground.

D. UL 1449 Clamping Voltage

1. 120/208V wye: 800 V maximum.

E. EMI/RFI Noise Attenuation Using 50-ohm Insertion Loss Test: 55 dB at 100 kHz.

F. Accessories:

1. Form-C contacts, one normally open and one normally closed, for remote monitoring of system operation. Contacts to reverse position on failure of any surge diversion module.
2. Audible alarm activated on failure of any surge diversion module.

G. External Mount:

1. TVSS unit in stand-alone enclosure, with front panel display through front.
2. Field replaceable suppression modules, minimum two (2) modules per phase.
3. Provide overcurrent protective device in associated panelboard to disconnect TVSS.
4. As specified on drawings or approved equivalent, with specified accessories.

## 2.7 OVERCURRENT PROTECTIVE DEVICES

A. Molded-Case Circuit Breaker: NEMA AB 1, with interrupting capacity to meet available fault currents.

1. Thermal-Magnetic Circuit Breakers: Inverse time-current element for low-level overloads, and instantaneous magnetic trip element for short circuits. Adjustable magnetic trip setting for circuit-breaker frame sizes 250 A and larger.

B. Molded-Case Circuit-Breaker Features and Accessories. Standard frame sizes, trip ratings, and number of poles.

1. Lugs: Mechanical style, suitable for number, size, trip ratings, and material of conductors.
2. Application Listing: Appropriate for application; Type SWD for switching fluorescent lighting loads; Type HACR for heating, air-conditioning, and refrigerating equipment.

## 2.8 ACCESSORY COMPONENTS AND FEATURES

A. Accessory Set: Tools and miscellaneous items required for overcurrent protective device test, inspection, maintenance, and operation.

## PART 3 - EXECUTION

### 3.1 INSTALLATION

A. Install panelboards and accessories according to NEMA PB 1.1.

B. Mounting Heights: Top of trim 74 inches above finished floor, unless otherwise indicated.

C. Mounting: Plumb and rigid without distortion of box. Mount recessed panelboards with fronts uniformly flush with wall finish.

D. Circuit Directory: Create a directory to indicate installed circuit loads after balancing panelboard loads. Obtain approval before installing. Use a computer or typewriter to create directory; handwritten directories are not acceptable.

E. Install filler plates in unused spaces.

F. Provision for Future Circuits at Flush Panelboards: Stub four 1-inch empty conduits from panelboard into accessible ceiling space or space designated to be ceiling space in the future. Stub four 1-inch empty conduits into raised floor space or below slab not on grade.

G. Wiring in Panelboard Gutters: Arrange conductors into groups and bundle and wrap with wire ties after completing load balancing.

### 3.2 IDENTIFICATION

A. Identify field-installed conductors, interconnecting wiring, and components; provide warning signs as specified in Division 26 Section "Basic Electrical Materials and Methods"

B. Panelboard Nameplates: Label each panelboard with engraved metal or laminated-plastic nameplate mounted with corrosion-resistant screws.

### 3.3 CONNECTIONS

A. Install equipment grounding connections for panelboards with ground continuity to main electrical ground bus.

B. Tighten electrical connectors and terminals according to manufacturer's published torque-tightening values.

### 3.4 FIELD QUALITY CONTROL

A. Prepare for acceptance tests as follows:

1. Test insulation resistance for each panelboard bus, component, connecting supply, feeder, and control circuit.
2. Test continuity of each circuit.
3. Test continuity of each TVSS suppression module.

B. Balancing Loads: After Substantial Completion, but not more than 60 days after Final Acceptance, measure load balancing and make circuit changes as follows:

1. Measure as directed during period of normal system loading.
2. Perform load-balancing circuit changes outside normal occupancy/working schedule of the facility and at time directed. Avoid disrupting critical 24-hour services such as fax machines and on-line data-processing, computing, transmitting, and receiving equipment.
3. After circuit changes, recheck loads during normal load period. Record all load readings before and after changes and submit test records.
4. Tolerance: Difference exceeding 20 percent between phase loads, within a panelboard, is not acceptable. Rebalance and recheck as necessary to meet this minimum requirement.

3.5 ADJUSTING

A. Set field-adjustable switches and circuit-breaker trip ranges.

3.6 CLEANING

A. On completion of installation, inspect interior and exterior of panelboards. Remove paint splatters and other spots. Vacuum dirt and debris; do not use compressed air to assist in cleaning. Repair exposed surfaces to match original finish.

**END OF SECTION 262416**

**SECTION 262726 - WIRING DEVICES**

PART 1 - GENERAL

1.1 RELATED DOCUMENTS

A. Drawings and general provisions of the Contract, including General and Supplementary Conditions and Division 1 Specification Sections, apply to this Section.

1.2 SUMMARY

A. This Section includes receptacles, connectors, switches, and finish plates.

B. This Section includes floor boxes and poke-thru floor fittings.

1.3 DEFINITIONS

A. GFCI: Ground-fault circuit interrupter.

B. DL: Damp location as defined in NFPA 70, Article 100.

C. WP: Weatherproof for wet locations as defined in NFPA 70, Article 100.

1.4 SUBMITTALS

A. Product Data: For each product specified.

1.5 QUALITY ASSURANCE

A. Electrical Components, Devices, and Accessories: Listed and labeled as defined in NFPA 70, Article 100, by a testing agency acceptable to authorities having jurisdiction.

B. Comply with NEMA WD 1.

C. Comply with NFPA 70.

1.6 COORDINATION

A. Receptacles for Owner-Furnished Equipment: Match plug configurations.

1. Cord and Plug Sets: Match equipment requirements.

PART 2 - PRODUCTS

## 2.1 MANUFACTURERS

A. Manufacturers: Subject to compliance with requirements, provide products by one of the following:
   1. Wallbox Dimmers
      a. Leviton
      b. Lutron

   2. Floor Boxes
      a. Hubbell
      b. Wiremold

   3. Other Wiring Devices
      a. Bryant Electric, Inc.
      b. Cooper Wiring Devices.
      c. Hubbell, Inc.; Wiring Devices Div.
      d. Leviton Manufacturing Co., Inc.
      e. Pass & Seymour/Legrand; Wiring Devices Div.

## 2.2 RECEPTACLES

A. Description: Impact-resistant nylon face with finder groove, thermoplastic back body, and one-piece triple-wipe power contacts. Side and back wired, back wire terminals use screw pressure plates.

B. Duplex Straight-Blade Receptacles: Specification grade; 20 ampere, 125 volt rated.

   1. Equal to: Pass & Seymour #5362.

C. Simplex Straight-Blade Receptacles: Specification grade; 20 ampere, 125 volt rated.

   1. Equal to: Pass & Seymour #5351.

D. GFCI Receptacles: Design units for installation in a 2-3/4-inch deep outlet box without an adapter.

   1. Equal to: Pass & Seymour #2094.

E. Dryer Receptacle: Specification grade; 30 ampere, 3 pole, 4 wire, 125/250 volt rated.

   1. Verify plug configuration.
   2. Equal to: Pass & Seymour #3864.

## 2.3 SWITCHES

A. Snap Switches: Specification grade; 20 ampere, 120/277 volt rated; side and back wired; quiet type.

   1. Poles: Provide switches in single-pole, double-pole, three-way, and four-way configurations as indicated on the drawings.
   2. Equal to: Pass & Seymour #20AC.

## 2.4 WALLBOX DIMMERS

A. Description: Slider with preset suitable for operation of connected load.

1. Capacity: As indicated on the drawings.
2. Compatibility: Match connected loads.
3. Faceplate: Standard decorator faceplate.
4. Derating: Observe derating restrictions for ganged devices.
5. Equal to: Commercial grade Leviton Renoir Architectural Specification Slide Dimmer with on/off toggle switch for incandescent, magnetic low voltage, and fluorescent dimming of Mark X ballasts.

## 2.5 WALL PLATES

A. Single and combination types match corresponding wiring devices.

1. Plate-Securing Screws: Metal with head color to match plate finish.
2. Material for Finished Spaces: 0.04-inch thick, Type 302, satin-finished stainless steel.
3. Material for Unfinished Spaces: Galvanized steel.
4. Weatherproof plates in damp locations (DL): Heavy cast aluminum; hinged, gasketed, equal to Pass & Seymour #4511 for horizontal mount or #4512 for vertical mount. These covers shall be installed outdoors in a location protected from the weather such as roofed open porches, canopies, eves, and the like or in other damp locations where the receptacle will not be subject to beating rain or water run-off.
5. Weatherproof while-in-use plates in wet locations (WP): Self-closing white non-metallic flat flush cover integral to one-piece non-metallic backbox for full recess mounting in building exterior, the integrity of which is not affected when the attachment plug cap is inserted. Equal to Arlington Industries Low Profile In-Box, select box and trim types to coordinate with building materials at installed location.

## 2.6 FINISHES

A. Color:

1. Grey, unless otherwise indicated for normal circuits.

## 2.7 CIRCUIT LABELS FOR RECEPTACLES

A. Brother PC clear adhesive with Arial #14 black lettering for normal circuits.

# PART 3 - EXECUTION

## 3.1 INSTALLATION

A. Install devices and assemblies plumb and secure.

B. Install wall plates when painting is complete.

C. Arrangement of Devices: Unless otherwise indicated, mount flush, with long dimension vertical, and grounding terminal of receptacles on bottom. Group adjacent switches under single, multigang wall plates.

D. Install wall dimmers to achieve indicated rating after derating for ganging as instructed by manufacturer.

E. Do not share neutral conductor on load side of dimmers.

F. Protect devices and assemblies during painting.

G. Provide a GFCI receptacle for each device indicated on the drawings. Do not connect GFCI receptacles to protect downstream devices.

3.2 IDENTIFICATION

A. Comply with Division 26 Section "Basic Electrical Materials and Methods."

1. Switches: Where three or more switches are ganged, and elsewhere as indicated, identify each switch with approved legend engraved on wall plate.
2. Receptacles: Identify serving panelboard and circuit number on faceplate of all receptacles.
3. Conductors Serving Receptacles: Identify serving panelboard and circuit number. Use durable wire markers or tags within outlet boxes.

3.3 CONNECTIONS

A. Connect wiring device grounding terminal to outlet box with bonding jumper.

B. Connect wiring device grounding terminal to branch-circuit equipment grounding conductor.

C. Tighten electrical connectors and terminals according to manufacturers published torque-tightening values.

3.4 FIELD QUALITY CONTROL

A. Test wiring devices for proper polarity and ground continuity.

B. Test GFCI operation with fault simulations according to manufacturer's written instructions.

C. Replace damaged or defective components.

3.5 CLEANING

A. Internally clean devices, device outlet boxes, and enclosures. Replace stained or improperly painted wall plates or devices.

**END OF SECTION 262726**

**SECTION 262816 - ENCLOSED SWITCHES**

PART 1 - GENERAL

1.1 RELATED DOCUMENTS

A. Drawings and general provisions of the Contract, including General and Supplementary Conditions and Division 1 Specification Sections, apply to this Section.

1.2 SUMMARY

A. This Section includes enclosed individually mounted switches used for the following:

1. Feeder and equipment disconnect switches.
2. Motor disconnect switches.

B. Related Sections: The following Sections contain requirements that relate to this Section:

1. Division 26 Section "Wiring Devices" for attachment plugs and receptacles, and snap switches used for disconnect switches.

1.3 SUBMITTALS

A. General: Submit each item in this Article according to the Conditions of the Contract and Division 1 Specification Sections.

B. Product Data: For each type of switch, accessory, and component indicated. Include dimensions and manufacturers' technical data on features, performance, electrical characteristics, ratings, and finishes.

C. Shop Drawings: For each switch and related equipment.

1. Dimensioned plans, elevations, sections, and details, including required clearances and service space around equipment. Show tabulations of installed devices and accessories, equipment features, and ratings. Include the following:

a. Enclosure types and details.
b. Bus materials, configuration, current, and voltage ratings.
c. Short-circuit current rating of switches.
d. Descriptive documentation of options or accessories such as auxiliary devices, controls, interlocks, etc.
e. UL listing for series rating of installed devices.
f. Fuse product data for fusible devices.

2. Wiring Diagrams: Diagram power, signal, and control wiring and differentiate between manufacturer-installed and field-installed wiring.

D. Field test results indicating and interpreting test results.

E. Maintenance Data: For switches to include in operation and maintenance manuals specified in Division 1. In addition to requirements specified in Division 1 Section "Contract Closeout," include the following:

1. Routine maintenance requirements for switches and all installed components.
2. Manufacturer's written instructions for testing and adjusting switches.

1.4 QUALITY ASSURANCE

A. Source Limitations: Obtain switches from one source and by a single manufacturer.

B. Comply with NFPA 70 for components and installation.

C. Listing and Labeling: Provide switches specified in this Section that are listed and labeled.

1. The Terms "Listed" and "Labeled": As defined in the National Electrical Code, Article 100.
2. Listing and Labeling Agency Qualifications: A "Nationally Recognized Testing Laboratory" (NRTL) as defined in OSHA Regulation 1910.7.

PART 2 - PRODUCTS

2.1 MANUFACTURERS

A. Manufacturers: Subject to compliance with requirements, provide switches by one of the following:

1. Enclosed Disconnect Switches:
   a. General Electric Co.; Electrical Distribution and Control Division.
   b. Siemens Energy & Automation, Inc.
   c. Square D Co.
   d. Eaton Corp.; Cutler-Hammer Products.

2.2 ENCLOSURES

A. Enclosure: NEMA KS 1, Type 1, unless otherwise specified or required to meet environmental conditions of installed location.

1. Outdoor Locations: Type 3R.

2.3 ENCLOSED DISCONNECT SWITCHES

A. Enclosed, Nonfusible Switch: NEMA KS 1, Type HD Heavy Duty, with lockable handle.

B. Enclosed, Fusible Switch, 800 A and Smaller: NEMA KS 1, Type HD Heavy Duty, clips to accommodate specified fuses, enclosure consistent with environment where located, handle lockable with 2 padlocks, and interlocked with cover in CLOSED position.

C. Features and Accessories:
1. Lugs: Mechanical lugs and power-distribution connectors for number, size, and material of conductors indicated.

2.4 FUSES

A. Fuses shall be dual element time delay Bussman Low Peak Class RK-1 or approved equivalent.

PART 3 - EXECUTION

3.1 INSTALLATION

A. All disconnect switches shall be fused type unless otherwise indicated on the drawings.

B. Install switches level and plumb in locations as indicated, according to manufacturer's written instructions.

C. Install wiring between switches, control accessories, and indication devices.

D. Connect switches and components to wiring system and to ground as indicated and instructed by manufacturer.

1. Tighten electrical connectors and terminals according to manufacturer's published torque-tightening values.

3.2 IDENTIFICATION

A. Identify field-installed conductors, interconnecting wiring, and components; provide warning signs as specified in Division 26 Section "Basic Electrical Materials and Methods."

B. Switch Nameplates: Label each switch with engraved metal or laminated-plastic nameplate mounted with corrosion-resistant screws.

3.3 FIELD QUALITY CONTROL

A. Testing: After installing switches and after electrical circuitry has been energized, demonstrate product capability and compliance with requirements.

1. Procedures: Perform each visual and mechanical inspection and electrical test stated in NETA ATS, Section 7.5 for disconnect switches. Certify compliance with test parameters.

B. Correct malfunctioning units on-site, where possible, and retest to demonstrate compliance; otherwise, remove and replace with new units and retest.

3.4 CLEANING

A. After completing system installation, including outlet fittings and devices, inspect exposed finish. Remove burrs, dirt, and construction debris and repair damaged finish including chips, scratches, and abrasions.

**END OF SECTION 262816**

# SECTION 265100 – LIGHTING AND LIGHTING CONTROL

## PART 1 - GENERAL

### 1.1 RELATED DOCUMENTS

A. Drawings and general provisions of the Contract, including General and Supplementary Conditions and Division 1 Specification Sections, apply to this Section.

### 1.2 SUMMARY

A. This Section includes lighting fixtures, lighting controls, lighting fixtures mounted on exterior building surfaces, exterior lighting, lamps, ballasts, emergency lighting units, emergency fluorescent power supply units, and accessories.

### 1.3 SUBMITTALS

A. Product Data: For each lighting fixture type, arranged in order of fixture designation. Include data on features, accessories, and the following:

1. Dimensions of fixtures.
2. Certified results of independent laboratory tests for fixtures and lamps for electrical ratings and photometric data.
3. Certified results of laboratory tests for fixtures and lamps for photometric performance.
4. Emergency lighting unit battery and charger.
5. Emergency fluorescent power supply unit battery and charger.
6. Fluorescent and high-intensity-discharge ballasts. Include manufacturer's cut sheet for specific ballasts proposed for use on job.
7. Types of lamps.

B. Product Data: For each type of lighting control.

C. Occupancy Sensor Layout Drawings: Scaled floor plans with lighting control manufacturer's layout of occupancy sensors. Sensor layout and quantity shall completely cover each area indicated, show coverage patterns for each sensor.

D. Maintenance Data: For lighting fixtures to include in maintenance manuals specified in Division 1.

### 1.4 QUALITY ASSURANCE

A. Fixtures, Controls, Emergency Lighting Units, Emergency Fluorescent Power Supply Units, and Accessories: Listed and labeled as defined in NFPA 70, Article 100, by a testing agency acceptable to authorities having jurisdiction.

B. Comply with NFPA 70.

C. FM Compliance: Fixtures for hazardous locations shall be listed and labeled for indicated class and division of hazard by FM.

D. NFPA 101 Compliance: Comply with visibility and luminance requirements for exit signs.

1.5 COORDINATION

A. Fixtures, Mounting Hardware, and Trim: Coordinate layout and installation of lighting fixtures with ceiling system and other construction.

1.6 WARRANTY

A. Ballast Warranty: 5-year replacement warranty. Include labor allowance required for ballast replacement in fixture on-site at no extra cost to the Owner.

B. Emergency Battery Warranty: 3-year pro-rated warranty.

1.7 EXTRA MATERIALS

A. Furnish extra materials described below that match products installed and that are packaged with protective covering for storage and identified with labels describing contents.

1. Lamps: 10 for every 100 of each type and rating installed. Furnish at least one of each type.

PART 2 - PRODUCTS

2.1 MANUFACTURERS

A. Products: Subject to compliance with requirements, provide one of the products indicated for each designation in the Lighting Fixture Schedules on the drawings.

B. Lighting Ballasts: Subject to compliance with requirements, provide lighting ballasts from one of the following manufacturers:
1. Advance
2. Magnetek
3. Osram/Sylvania

C. Lamps: Subject to compliance with requirements, provide lamps from one of the following manufacturers:
1. General Electric
2. Osram/Sylvania
3. Philips
4. Venture (metal halide lamps, pulse start metal halide lamps)

2.2 FIXTURES AND FIXTURE COMPONENTS, GENERAL

A. Metal Parts: Free from burrs, sharp corners, and edges.

B. Sheet Metal Components: Steel, unless otherwise indicated. Form and support to prevent warping and sagging.

C. Doors, Frames, and Other Internal Access: Smooth operating, free from light leakage under operating conditions, and arranged to permit relamping without use of tools. Arrange doors, frames, lenses, diffusers, and other pieces to prevent accidental falling during relamping and when secured in operating position.

D. Reflecting Surfaces: Minimum reflectance as follows, unless otherwise indicated:

1. White Surfaces: 85 percent.
2. Specular Surfaces: 83 percent.
3. Diffusing Specular Surfaces: 75 percent.
4. Laminated Silver Metallized Film: 90 percent.

E. Lenses, Diffusers, Covers, and Globes: 100 percent virgin acrylic plastic or annealed crystal glass, unless otherwise indicated.

1. Plastic: High resistance to yellowing and other changes due to aging, exposure to heat, and ultraviolet radiation.
2. Lens Thickness: 0.125 inch (3 mm) minimum, unless greater thickness is indicated.

## 2.3 FLUORESCENT LAMP BALLASTS

A. General Requirements: Unless otherwise indicated, features include the following:

1. Electronic type, rapid start or programmed start, designed for type and quantity of lamps indicated at full light output.
2. Total Harmonic Distortion Rating: Less than 10 percent.
3. Sound Rating: A.

B. Electronic Ballasts for Linear Lamps: Unless otherwise indicated, features include the following, besides those in "General Requirements" Paragraph above:

1. Certified Ballast Manufacturer Certification: Indicated by label.
2. Encapsulation: Without voids in potting compound.
3. Parallel Lamp Circuits: Multiple lamp ballasts connected to maintain full light output on surviving lamps if one or more lamps fail.

C. Electronic Ballasts for Compact Lamps: Unless otherwise indicated, features include the following, besides those in "General Requirements" Paragraph above:

1. Certified Ballast Manufacturer Certification: Indicated by label.
2. Encapsulation: Without voids in potting compound.
3. Power Factor: 90 percent, minimum.
4. Operating Frequency: 20 kHz or higher.
5. Flicker: Less than 5 percent.
6. Lamp Current Crest Factor: Equal or better than 1.7.
7. Transient Protection: Comply with IEEE C62.41 for Category A1 locations.
8. LampGuard: Protect ballast system upon failure of lamp.
9. Ballast Coil Temperature: 65 deg C, maximum, for nonrecessed fixtures.

D. Ballasts for Dimmer-Controlled Fixtures: Comply with general and fixture-related requirements above for electronic ballasts.

1. Mark X – 2 wire ballast.

2. Compatibility: Certified by manufacturer for use with specific dimming system indicated for use with each dimming ballast.

E. Ballasts for Low-Temperature Environments: As follows:

1. Temperatures 0 Deg F (Minus 17 Deg C) and Above: Electronic or electromagnetic type rated for 0 deg F (minus 17 deg C) starting temperature.

## 2.4 HIGH-INTENSITY-DISCHARGE LAMP BALLASTS

A. General: Comply with ANSI C82.4. Unless otherwise indicated, features include the following:

1. 150W and below: Constant wattage autotransformer type.
2. Above 150W: Constant wattage autotransformer or regulating high-power-factor type, unless otherwise indicated.
3. Operating Voltage: Match system voltage.
4. Minimum Starting Temperature: Minus 22 deg F (Minus 30 deg C) for single lamp ballasts.
5. Normal Ambient Operating Temperature: 104 deg F (40 deg C).
6. Open-circuit operation that will not reduce average life.

B. Encapsulation: Manufacturer's standard epoxy-encapsulated model designed to minimize audible fixture noise.

## 2.5 EXIT SIGNS

A. General Requirements: Comply with UL 924 and the following:
1. Sign Colors and Lettering Size: Comply with authorities having jurisdiction.

B. Internally Lighted Signs: As follows:
1. Lamps for AC Operation: Light-emitting diodes, 70,000 hours minimum rated lamp life.

## 2.6 EMERGENCY LIGHTING UNITS

A. General Requirements: Self-contained units, wall or ceiling mounted. Comply with UL 924. Units include the following features:
1. Battery: Sealed, maintenance-free, lead-acid type with minimum 10-year nominal life and warranty.
2. Charger: Fully automatic, solid-state type with sealed transfer relay.
3. Operation: Relay automatically turns lamp on when supply circuit voltage drops to 80 percent of nominal voltage or below. Lamp automatically disconnects from battery when voltage approaches deep-discharge level. When normal voltage is restored, relay disconnects lamps, and battery is automatically recharged and floated on charger.

## 2.7 EMERGENCY FLUORESCENT POWER SUPPLY UNIT

A. Internal Type: Self-contained, modular, battery-inverter unit factory mounted concealed within fixture body. Comply with UL 924.

1. Integral Test Switch and Light-Emitting Diode Indicator Light: Visible and accessible without opening fixture or entering ceiling space.
2. Battery: Sealed, maintenance-free, nickel-cadmium type with minimum 10-year nominal life.

3. Light Output Rating:
   a. Linear Lamps: Minimum 1100 lumens total while operating single or multiple low-mercury lamps.
   b. Compact Lamps: Minimum 600 lumens total while operating single or multiple low-mercury lamps.
4. Charger: Fully automatic, solid-state, constant-current type.
5. Operation: Relay automatically energizes lamp from unit when normal supply circuit voltage drops to 80 percent of nominal voltage or below. When normal voltage is restored, relay disconnects lamp, and battery is automatically recharged and floated on charger.

## 2.8 LAMPS

A. Low mercury lamps capable of disposal in landfill.

1. Fluorescent Color Temperature and Minimum Color-Rendering Index: 3500 K and 85 CRI, unless otherwise indicated.
2. Noncompact Fluorescent Lamp Life: Rated average is 20,000 hours at 3 hours per start when used on rapid-start circuits.
3. Compact Fluorescent Lamps: 4-pin base for use with electronic ballasts.
4. Metal-Halide Color Temperature and Minimum Color-Rendering Index: 3600 K and 70 CRI, unless otherwise indicated.

## 2.9 OCCUPANCY SENSORS

A. Ceiling Sensors:

1. Dual Technology: Infrared and ultrasonic sensors integrated into one housing. Ultrasonic portion of sensor shall operate at 32 kHz or 40 kHz.
2. Performance and Coverage: Sensor adapts or “learns” patterns of use specific to controlled space to reduce false switching. 360 degree field of view. Minimum coverage of 2,000 square feet per sensor, with sensor centered in coverage area. Provide accessory power packs and connect to power sensor.
3. Mounting: Sensor shall flush horizontal mount tight to ceiling surface. Sensors that protrude from ceiling or utilize drop-down mounting brackets shall not be acceptable.
4. Finish: White.
5. Load Rating: Provide accessory power packs with relay; connect to switch load. Relay in power packs shall be rated 20A for ballast loads.
6. Leviton OSC20-M or approved equivalent. Provide associated power packs with sensor power supply and load switching relay.

B. Wall Box Sensors:

1. Passive Infrared Technology: Adjustable sensitivity and range.
2. Performance and Coverage: 180 degree field of view. Integral sliding blinders adjust sensor field of view. Nominal 2,100 square feet coverage area. Sensor issues audible warning 10 seconds prior to turning load off.
   a. Automatic on/automatic off load control based on occupancy of monitored area.
   b. Manual on/manual off load control with pushbutton on face. Load may be manually turned on or off at any time.
   c. Manual on/automatic off load control requires pressing the pushbutton on sensor face to turn load on. Sensor automatically turns load off when monitored area is unoccupied.
3. Mounting: Sensor shall mount in wall box with decorator style faceplate.
4. Load Rating: Switch integral in sensor housing
   a. Rated for 1800 watt ballast or incandescent load at 120V

b. Rated for 4000 watt ballast load at 277V
c. Rated for ¼ horsepower motor load at 120V
5. Leviton ODS15-ID or approved equivalent.

2.10 FIXTURE SUPPORT COMPONENTS

A. Comply with Division 26 Section "Basic Electrical Materials and Methods," for channel- and angle-iron supports and nonmetallic channel and angle supports.

B. Twin-Stem Hangers: Two, 1/2-inch (12-mm) steel tubes with single canopy arranged to mount a single fixture. Finish same as fixture.

C. Rod Hangers: 3/8-inch minimum diameter, cadmium-plated, threaded steel rod.

2.11 FINISHES

A. Fixtures: Manufacturer's standard, unless otherwise indicated.

1. Paint Finish: Applied over corrosion-resistant treatment or primer, free of defects.
2. Metallic Finish: Corrosion resistant.

PART 3 - EXECUTION

3.1 INSTALLATION

A. Fixtures: Set level, plumb, and square with ceiling and walls, and secure according to manufacturer's written instructions and approved submittal materials. Install lamps in each fixture.

B. Occupancy Sensors: Provide required power packs with sensor power supply and load switching relay. Connect power packs per manufacturer’s instructions. Adjust settings of occupancy sensors, tailor to configuration and use of room served.

C. After Substantial Completion, but not more than 60 days after Final Acceptance, re-adjust occupancy sensors for Owner’s actual pattern of use.

D. Support for Fixtures in or on Grid-Type Suspended Ceilings: Use grid for support.

1. Install a minimum of four ceiling support system rods or wires for each fixture. Locate not more than 6 inches (150 mm) from fixture corners.
2. Support Clips: Fasten to fixtures and to ceiling grid members at or near each fixture corner.
3. Fixtures of Sizes Less Than Ceiling Grid: Arrange as indicated on reflected ceiling plans or center in acoustical panel, and support fixtures independently with at least two 3/4-inch (20-mm) metal channels spanning and secured to ceiling tees.

E. Suspended Fixture Support: As follows:

1. Pendants and Rods: Where longer than 48 inches (1200 mm), brace to limit swinging.
2. Continuous Rows: Suspend from cable installed according to fixture manufacturer's written instructions and details on Drawings.

F. Burn-In: Continuously illuminate (burn-in) lamps and fixtures per lamp manufacturer's recommendations.

3.2 CONNECTIONS

A. Ground equipment.

1. Tighten electrical connectors and terminals according to manufacturer's published torque-tightening values.

3.3 FIELD QUALITY CONTROL

A. Inspect each installed fixture for damage. Replace damaged fixtures and components.

B. Provide instruments to make and record test results.

C. Tests: As follows:

1. Verify normal operation of each fixture after installation.
2. Emergency Lighting: Interrupt electrical supply to demonstrate proper operation.
3. Verify normal transfer to battery source and retransfer to normal.
4. Verify normal operation of each lighting control.

D. Malfunctioning Fixtures and Components: Replace or repair, then retest. Repeat procedure until units operate properly.

3.4 CLEANING AND ADJUSTING

A. Clean fixtures internally and externally after installation. Use methods and materials recommended by manufacturer.

B. Adjust aimable fixtures to provide required light intensities.

**END OF SECTION 265100**

# SECTION 267200 - COMMUNICATION AND DATA-PROCESSING EQUIPMENT

## PART 1 - GENERAL

### 1.1 RELATED DOCUMENTS

A. Drawings and general provisions of the Contract, including General and Supplementary Conditions and Division 1 Specification Sections, apply to this Section.

### 1.2 SUMMARY

A. This Section includes telecommunications cables as identified on the drawings.

B. This Section includes wire, cable, connecting devices, installation, and testing for wiring systems to be used as signal pathways for voice and high-speed data transmission. Unless otherwise indicated, copper systems basis of design are designated as Cat 5e equipment.

1. The Telecommunications contractor shall install voice and data cables from the Telecommunications Closet to the outlet where indicated.

### 1.3 WARRANTY

A. General Warranty: Special warranty specified in this Article shall not deprive Owner of other rights Owner may have under other provisions of the Contract Documents and shall be in addition to, and run concurrent with, other warranties made by Contractor under requirements of the Contract Documents.

B. Special Warranty: 15 year for voice/data system or greater.

### 1.4 DEFINITIONS

A. EMI: Electromagnetic interference.

B. IDC: Insulation displacement connector.

C. LAN: Local area network.

D. PVC: Polyvinyl chloride.

E. STP: Shielded twisted pair.

F. UTP: Unshielded twisted pair.

### 1.5 SUBMITTALS

A. Product Data: Include data on features, ratings, and performance for each component specified.

1. Cables
2. Cords

3. Patch panels and patch cords
4. Outlets/Jacks
5. Adaptors
6. Mounting elements
7. Cable management products

B. Shop Drawings: Include dimensioned plan and elevation views of components. Show access and work-space requirements.

1. Equipment rack layout
2. Communication closet arrangement
3. Cable numbering scheme explanation
4. Floor plans indicating cable number(s) for each outlet. Autocad drawing files will be available in accordance with general requirements of this specification for the contractor's use in preparing floor plans.

C. Product Certificates: Signed by manufacturers of cables, connectors, and terminal equipment certifying that products furnished comply with requirements.

D. Electronic copies of certification reports on CD.

E. Maintenance Data: For products to include in maintenance manuals specified in Division 1.

F. Record drawings.

## 1.6 QUALITY ASSURANCE

A. Installer Qualifications: An experienced and approved Systimax installer who is a registered communication distribution designer certified by the Building Industry Consulting Service International.

B. Comply with NFPA 70.

C. Electrical Components, Devices, and Accessories: Listed and labeled as defined in NFPA 70, Article 100, by a testing agency acceptable to authorities having jurisdiction, and marked for intended use.

D. Comply with all applicable EIA/TIA Standards for telecommunications cabling, pathways, performance testing, grounding, and administrative standards.

## 1.7 COORDINATION

A. Coordinate Work of this Section with Owner's LAN equipment suppliers. Coordinate service entrance arrangement with local exchange carrier.

1. Meet jointly with representatives of above organizations and Owner's representatives to exchange information and agree on details of equipment arrangements and installation interfaces.
2. Record agreements reached in meetings and distribute record to other participants.
3. Adjust arrangements and locations of distribution frames, patch panels, and cross connects in equipment rooms and wiring closets to accommodate and optimize arrangement and space requirements of telephone switch and LAN equipment.

PART 2 - PRODUCTS

2.1 MANUFACTURERS

A. The following products are specified as manufactured by Systimax. Equipment, hardware, and cabling demonstrating conformance to original design intent shall be considered as equal as manufactured by the following:

1. The Siemon Company
2. Berk-Tek Ortronics
3. Panduit with Panduit Apparatus
4. Leviton
5. Krone
6. Hubbell

B. General: Coordinate the features of materials and equipment so they form an integrated system. Match components and interconnections for optimum future performance.

2.2 PATHWAYS

A. Exterior underground ductbank: PVC40, Sweep elbows by Electrical

B. Interior underground pathways: PVC40 by Electrical

C. Interior concealed data/phone pathways: EMT by Electrical and cabletray or “D” Rings above suspended ceilings.

D. Interior exposed data/phone pathways: EMT by Electrical

E. Within Telecommunications Closets: All hardware, cabletray and wire management is by Telecommunications Contractor

2.3 FIBEROPTIC CABLE

A. Optical fiber cable:
1. Lazrspeed 150 Multimode Riser Cable (50/125)
   a. 12 strands unless otherwise indicated
2. Optispeed Single Mode Riser Cable (8/125)
   a. 12 stands unless otherwise indicated
3. Fiber Patch Cords:
   a. Fiber patch cords for jumpers from fiber patch panel to equipment. Coordinate exact length with owners final layout.
   b. Furnish additional patch cords for server room equipment connection to network. Coordinate exact length with owners final layout.

2.4 CONNECTORS

A. Multimode cables

1. Duplex 1.6MM LC connectors

B. Single mode cables

1. Optispeed 1.6MM LC connectors

2.5 FIBER DISTRIBUTION

A. All fiber optic cable shall terminate using LC connectors and placed in rack mount fiber optic patch panels on each end.

B. Complete shelf, coupler housings and couplers for duplex LC connectors

1. Fiber termination sliding shelf
2. Coupler panel housing duplex
3. Multimode and single mode LC adapters
4. Systimax 600 BLS series
5. Trough management

2.6 COPPER BACKBONE TERMINATIONS/SERVER ROOM AND CLOSET TERMINATION

A. 110 blocks

1. 100 pair and as indicated, Category 5e, wall mounted with legs or rack mounted as indicated on drawings and C4 connector clips.
2. Quantity as required for termination of all cables, provide 50% spare capacity.
3. Provide horizontal jumper troughs mounted between adjacent wiring blocks and at the top and bottom of each column of blocks.
4. Provide jumper distribution system at punch down block locations to facilitate installation of cross connect wiring.
5. Provide connecting blocks and designation strips. Backbone cable frames shall employ 5-pair connecting blocks, and horizontal cable frames shall employ six 4-pair connecting blocks on each 25-pair row. Frames shall be oriented so that backbone cable frames are located on the left and horizontal cable frames are located on the right of the termination field when facing the frame assembly.

2.7 HORIZONTAL CABLES (STATION CABLES)

A. Gigaspeed XL 2071e

1. Category 5e
2. Plenum rated
3. Type: Unshielded Twisted Pair (UTP), UL Listed
4. Blue Jacket

2.8 OUTLETS

A. Faceplates:

1. Size: Single gang
2. Outlet positions: As indicated
3. Fillers: As required for unused jack openings
4. Color: Slate Grey

B. Furniture Faceplates:

1. Modular furniture faceplate suitable for Herman Miller Resolve furniture
2. Slate Grey (verify)

C. Data and Phone Jacks:

1. Gigaspeed XL MGS400 Series
2. Mounting: In modular face plate
3. Category 5e, RJ 45, 568 B pin-out configuration
4. Blue jack insert identification
5. Voice or data icon as indicated
6. Verify jack type and configuration with Owners phone equipment

2.9 PATCH PANELS

A. Patchmax GS3 Gigaspeed XL

1. Front connections: modular jacks
2. Rear connections: 110 style
3. Ports: 48
4. Quantity: As required for termination of each cable plus spares and 10% blank positions
5. Mounting: 19" rack
6. Horizontal wire management between each patch panel
7. Black finish

2.10 PATCH CORDS

A. Gigaspeed

1. Blue patch cords
   a. 2 patch cords/horizontal cable run
   b. Closet patch cord lengths – 50% - 4' long, 50% - 6' long
   c. C4 to RJ45 for voice patch – one for each designated voice horizontal cable
   d. 20% extra

B. White/Black or White/Orange, 1roll each for main equipment room.
1. Provide 24 AWG jumper wire to cross connect circuits.

2.11 MOUNTING ELEMENTS

A. Free standing racks

1. Chatsworth or equal, 19"x7'x6" 2 post or 4 post rack as indicated on the drawings
2. Chatsworth or equal, MCS double-sided vertical management
3. Chatsworth or equal, 19" jumper troughs
4. Chatsworth or equal, 2 U - UHCM DEEP to match vertical management
5. Black finish for all components
6. Quantity as required for mounting of specified equipment along with electronic equipment and 25% future expansion.

B. Cable ladder in telecommunications closets

1. Chatsworth or equal Universal cable runway, 18” width, 9” rung spacing.
2. Chatsworth or equal runway radius outside bend
3. Chatsworth or equal runway radius inside bend
4. Black finish
5. 6” elevation kit hardware above racks
6. Radius drop at all locations where cables enter or leave the runway

C. Distribution Rings

1. 6” D rings suitable for Cat 6e cables.

D. Cable Bundling Hardware

1. Reusable Velcro cable ties

2.12 IDENTIFICATION PRODUCTS

A. Comply with EIA/TIA Standards.

1. Cable Labels: Self-adhesive vinyl or vinyl-cloth wraparound tape markers, machine printed with alphanumeric cable designations.

PART 3 - EXECUTION

3.1 EXAMINATION

A. Examine pathway elements intended for cable. Check raceways, cable trays, and other elements for compliance with space allocations, installation tolerances, hazards to cable installation, and other conditions affecting installation. Proceed with installation only after unsatisfactory conditions have been corrected.

3.2 INSTALLATION

A. Wiring Method:
1. Install data/voice wiring in raceway as indicated on the drawings. Ceiling spaces are plenum rated.
2. Install cable TV cabling concealed in walls and ceilings. Install in conduit where indicated or required.

B. Install interior telephone and signal system raceways in maximum lengths of 150 feet and with a maximum of two 90-degree bends or equivalent. Separate lengths with pull or junction boxes where necessary to comply with these requirements, in addition to requirements above.

C. Utilize sweep elbows for all telephone and signal system raceways.

D. Install cable using techniques, practices, and methods that are consistent with Category 5e rating of components and that ensure Category 5e performance for data and voice outlets. A minimum of Category 5e performance for voice risers shall be required.

E. Install cable without damaging conductors, shield, or jacket.

F. Do not bend cable in handling or in installing to smaller radii than minimums recommended by manufacturer.

G. Pull cables without exceeding cable manufacturer's recommended pulling tensions.

1. Pull cables simultaneously if more than one is being installed in the same raceway.
2. Use pulling compound or lubricant if necessary. Use compounds that will not damage conductor or insulation.
3. Use pulling means, including fish tape, cable, rope, and basket-weave wire/cable grips, that will not damage media or raceway.

H. Install exposed cable parallel and perpendicular to surfaces or exposed structural members, and follow surface contours where possible.

I. Secure and support cable at intervals not exceeding 30 inches and not more than 6 inches from cabinets, boxes, fittings, outlets, racks, frames, and terminals. Provide necessary J-hooks for open air cable spans.

J. Wiring within Wiring Closets and Enclosures: Provide adequate length of conductors. Train conductors to terminal points with no excess. Use lacing bars to restrain cables, to prevent straining connections, and to prevent bending cables to smaller radii than minimums recommended by manufacturer.

K. Separation of Wires: Comply with EIA/TIA-569 rules for separating unshielded copper communication and data-processing equipment cables from potential EMI sources, including electrical power lines and equipment.

L. Make splices, taps, and terminations only at indicated outlets, terminals, and cross-connect and patch panels.

M. Use splice and tap connectors compatible with media types.

## 3.3 GROUNDING

A. Ground cable shields, drain conductors, and equipment to eliminate shock hazard and to minimize ground loops, common-mode returns, noise pickup, cross talk, and other impairments.

## 3.4 INSTALLATION IN EQUIPMENT ROOMS AND WIRING CLOSETS

A. Group connecting hardware for cables into separate logical fields.

B. Use patch panels to terminate cables entering the space, unless otherwise indicated.

## 3.5 FIBER INSTALLATION

A. Fiber cable shall be home run from the entrance space to the telecommunications closet being served in a continuous length. Cables shall not be spliced.

B. Contractor shall provide a service loop of 20’ at both ends of the cable. The location of the service loop shall be such that cable can be extended without interference of other systems such as mechanical equipment, piping, etc. The direction of the loop (clockwise or counterclockwise) shall be such that the cable enters the rack and distribution hardware with minimal bends.

C. Test fiber cables and connections in accordance with manufacturer's recommendations and provide documentation of such.

3.6 JACK INSTALLATION

A. Install filler plug for each unused faceplate opening.

B. Terminate wire in 568B pin configuration.

C. Provide connectors for CCTV and access control equipment per manufacturers literature.

3.7 STATION CABLE INSTALLATION

A. Provide quantities of horizontal cables indicated from telecommunications closet to station outlet. Cables shall not be spliced.

B. Install cables in and through pathways furnished as specified in EIA/TIA – 569.

C. Run cables parallel to building structure.

D. Provide D ring and Jhook supports at backboards and where required from cable tray to poke thru or conduit drop.

3.8 IDENTIFICATION

A. Identify system components complying with applicable requirements of EIA/TIA.

B. Workstation: Label cables within outlet boxes.

C. Distribution Racks and Frames: Label each unit and field within that unit.

D. Ground bar: Label each unit.

E. Within Connector Fields, in Wiring Closets and Equipment Rooms: Label each connector and each discrete unit of cable-terminating and connecting hardware.

F. Cables, General: Label each cable within 4 inches of each termination and tap, where it is accessible in a cabinet or junction or outlet box, and elsewhere as indicated.

G. Cable Schedule: Post in prominent location in each wiring closet and equipment room. List incoming and outgoing cables and their designations, origins, and destinations. Protect with rigid frame and clear plastic cover. Provide electronic copy of final comprehensive schedules for Project on CD to Owner.

3.9 FIELD QUALITY CONTROL

A. Testing: On installation of cable and connectors, demonstrate product capability and compliance with requirements. Test each signal path for end-to-end performance from each end of all pairs installed. Remove temporary connections when tests have been satisfactorily completed.

1. Certify all data cable performance in accordance with industry standards. Provide a report that indicates cable length, attenuation, and near end cross talk.

B. Correct malfunctioning units at Project site, where possible, and retest to demonstrate compliance; otherwise, remove and replace with new units and retest.

C. Warranty certificate, Manufacturer's or equivalent (15 year for voice data system).

D. Provide electronic copy of all test information and as built drawings.

3.10 CLEANING

A. After completing system installation, including outlet fittings and devices, inspect exposed finish. Remove burrs, dirt, and construction debris and repair damaged finish, including chips, scratches, and abrasions.

3.11 RECORD DRAWINGS

A. Maintain current documents at the construction site. Submit with Operation and Maintenance manuals.

B. Record drawings shall include all information required fore shop drawings and in addition, shall indicate the following:

1. Routing of cables from communications closets to jacks.
2. Revisions to construction documents (addenda and field changes).

**END OF SECTION 267200**

**SECTION 268100 – FIRE ALARM**

PART 1 - GENERAL

1.1 RELATED DOCUMENTS

A. Drawings and general provisions of the Contract, including General and Supplementary Conditions and Division 1 Specification Sections, apply to this Section.

1.2 SUMMARY

A. This Section includes fire alarm systems with control panel, manual stations, detectors, signal equipment, controls, and devices.

1.3 DEFINITIONS

A. FACP: Fire alarm control panel.

B. LED: Light-emitting diode.

C. Definitions in HQ ACC Fire Protection Standards and UFC 3-600-01 apply to fire alarm terms used in this Section.

1.4 SYSTEM DESCRIPTION

A. General: Noncoded, zoned system with manual and automatic alarm initiation; and hard-wired for signal transmission, using separate individual circuits for each zone of alarm initiation and notification appliances.

1.5 SUBMITTALS

A. Product Data: For each type of product indicated.

B. Shop Drawings:

1. Drawings: Prepare project specific information, drawn accurately to scale. Do not base Shop Drawings on reproductions of the Contract Documents or standard printed media.

2. Wiring Diagrams: Detail wiring and differentiate between manufacturer-installed and field-installed wiring. Include diagrams for equipment and for system with all terminals and interconnections identified.

C. Operating Instructions: For mounting at the FACP.

D. Submissions to Authorities Having Jurisdiction: Submit to authorities having jurisdiction. Include copies of annotated Contract Drawings as needed to depict component locations to facilitate review. Resubmit if required to make clarifications or revisions to obtain approval. On receipt of comments from authorities having jurisdiction, submit them to Engineer for review.

E. Certificate of Completion: Comply with HQ ACC Fire Protection Standards and UFC 3-600-01.

1.6 QUALITY ASSURANCE

A. Installer Qualifications: An experienced installer who is an authorized representative of the FACP manufacturer for both installation and maintenance of units required for this Project.

B. Manufacturer Qualifications: A firm experienced in manufacturing systems similar to those indicated for this Project and with a record of successful in-service performance.

C. Source Limitations: Obtain fire alarm system components through one source from a single manufacturer.

D. Compliance with Local Requirements: Comply with applicable building code, local ordinances and regulations, and requirements of authorities having jurisdiction.

E. Comply with HQ ACC Fire Protection Standards and UFC 3-600-01.

1.7 EXTRA MATERIALS

A. Furnish extra materials described below that match products installed and that are packaged with protective covering for storage and identified with labels describing contents.

1. Lamps for Remote Indicating Lamp Units: Quantity equal to 10 percent of amount installed, but not less than 1 unit.
2. Lamps for Strobe Units: Quantity equal to 10 percent of amount installed, but not less than 1 unit.
3. Smoke, Fire, and Flame Detectors: Quantity equal to 10 percent of amount of each type installed, but not less than 1 unit of each type.
4. Detector Bases: Quantity equal to 2 percent of amount of each type installed, but not less than 1 unit of each type.
5. Keys and Tools: One extra set for access to locked and tamperproofed components.
6. Audible and Visual Notification Appliances: One of each type installed.
7. Fuses: Two of each type installed in the system.

PART 2 - PRODUCTS

2.1 MANUFACTURERS

A. Manufacturers: Subject to compliance with requirements, provide products by one of the following:

1. Cerberus Pyrotronics.
2. Notifier; Div. of Pittway Corp.
3. Simplex Time Recorder Co.
4. Edwards Systems Technology; Unit of General Signal.
5. Fire Lite Alarms, Inc.
6. Fire Control Instruments
7. Silent Knight

2.2 FUNCTIONAL DESCRIPTION OF SYSTEM

A. Control of System: By the FACP.

B. System Supervision: Automatically detect and report open circuits, shorts, and grounds of wiring for initiating device, signaling line, and notification-appliance circuits.

C. Priority of Signals: Automatic alarm response functions resulting from an alarm signal from one zone or device are not altered by subsequent alarm, supervisory, or trouble signals. An alarm signal is the highest priority. Supervisory and trouble signals have second- and third-level priority. Higher-priority signals take precedence over signals of lower priority, even when the lower-priority condition occurs first. Annunciate and display all alarm, supervisory, and trouble signals regardless of priority or order received.

D. System Reset: All zones are manually resettable from the FACP after initiating devices are restored to normal.

E. Transmission to Remote Alarm Receiving Station: Automatically route alarm, supervisory, and trouble signals to a remote alarm station by means of a digital alarm communicator transmitter and telephone lines.

F. Loss of primary power at the FACP initiates a trouble signal at the FACP. An emergency light at the FACP indicates when the fire alarm system is operating on the secondary power supply.

G. Basic Alarm Performance Requirements: Unless otherwise indicated, operation of a manual station, automatic alarm operation of a smoke or heat detector, or operation of a sprinkler water flow device initiates the following:

1. Notification-appliance operation.
2. Identification at the FACP of the zone originating the alarm.
3. Transmission of an alarm signal to the remote alarm receiving station.
4. Shutdown of fans and other air-handling equipment serving zone where alarm was initiated.
5. Closing of smoke dampers in air ducts of system serving zone where alarm was initiated by opening a fire alarm relay to interrupt power to smoke dampers located in air supply ducts across smoke partitions in the area of the alarm.

H. Alarm Silencing, System Reset and Indication: Controlled by switches in the FACP.

1. Silencing-switch operation halts alarm operation of notification appliances and activates an "alarm silence" light. Display of identity of the alarm zone or device is retained.
2. Subsequent alarm signals from other devices or zones reactivate notification appliances until silencing switch is operated again.

I. Sprinkler valve-tamper switch operation initiates the following:

1. A supervisory, audible, and visible "valve-tamper" signal indication at the FACP.

J. Removal of an alarm-initiating device or a notification appliance initiates the following:

1. A "trouble" signal indication at the FACP for the device or zone involved.

## 2.3 MANUAL PULL STATIONS

A. Description: Fabricated of metal or plastic, and finished in red or brushed aluminum with molded operating instructions of contrasting color.

1. Single-action mechanism initiates an alarm.
2. Station Reset: Key or wrench operated.

## 2.4 SMOKE DETECTORS

A. General: Include the following features:

1. Operating Voltage: 24-V dc, nominal.
2. Self-Restoring: Detectors do not require resetting or readjustment after actuation to restore them to normal operation.
3. Plug-in Arrangement: Detector and associated electronic components are mounted in a module that connects in a tamper-resistant manner to a fixed base with a twist-locking plug connection. Terminals in the fixed base accept building wiring.
4. Integral Visual-Indicating Light: LED type. Indicates detector has operated.
5. Sensitivity: Can be tested and adjusted in-place after installation.

B. Photoelectric Smoke Detectors: Include the following features:

1. Detector style: Low Profile.

2. Sensor: LED or infrared light source with matching silicon-cell receiver.
3. Detector Sensitivity: Between 2.5 and 3.5 percent/foot smoke obscuration when tested according to UL 268A.

## 2.5 OTHER DETECTORS

A. Heat Detector, Combination Type: Actuated by either a fixed temperature of 135 deg F or rate of rise of temperature that exceeds 15 deg F per minute, unless otherwise indicated.
1. Mounting: Low profile plug-in base, interchangeable with smoke detector bases.

B. Duct Smoke Detector: Photoelectric type.

1. Sampling Tube: Design and dimensions as recommended by the manufacturer for the specific duct size, air velocity, and installation conditions where applied.
2. Relay Fan Shutdown: Rated to interrupt fan motor-control circuit.
3. Remote alarm LED Indicator: Provide for each duct smoke detector which is not readily visible such as above suspended ceilings. Furnish a label to indicate whether the detector is in the supply or return ductwork.

## 2.6 NOTIFICATION APPLIANCES

A. Description: Equip for mounting as indicated and have screw terminals for system connections.

1. Combination Devices: Factory-integrated audible and visible devices in a single-mounting assembly.
2. All alarm devices shall be semi-flush mounted unless otherwise indicated.

B. Horns: Electric-vibrating-polarized type, 24-V dc; with provision for housing the operating mechanism behind a grille. Horns produce a sound-pressure level of 90 dB, measured 10 feet from the horn.

C. Visible Alarm Devices: Synchronized Xenon strobe lights listed under UL 1971 with clear or nominal white polycarbonate lens. Mount lens on an aluminum faceplate. The word "FIRE" is engraved in minimum 1-inch- high letters on the lens.

1. Rated Light Output: Per NFPA.

2.7 CENTRAL FACP

A. Cabinet: Lockable steel enclosure. Arrange interior components so operations required for testing or for normal maintenance of the system are performed from the front of the enclosure. If more than one unit is required to form a complete control panel, fabricate with matching modular unit enclosure to accommodate components and to allow ample gutter space for field wiring and interconnecting panels.
1. Mounting: flush

B. Alarm and Supervisory Systems: Separate and independent in the FACP. Alarm-initiating zone boards consist of plug-in cards. Construction requiring removal of field wiring for module replacement is unacceptable.

C. Indications: Local, visible, and audible signals announce alarm, supervisory, and trouble conditions. Each type of audible alarm has a different sound.

D. Indicating Lights and System Controls: Individual LED devices identify zones transmitting signals. Zone lights distinguish between alarm and trouble signals, and indicate the type of device originating the signal. Manual switches and push-to-test buttons do not require a key to operate. Controls include the following:

1. Alarm acknowledge switch.
2. Alarm silence switch.
3. System reset switch.
4. LED test switch.

E. Resetting Controls: Prevent the resetting of alarm, supervisory, or trouble signals while the alarm or trouble condition still exists.

F. Instructions: Printed or typewritten instruction card mounted behind a plastic or glass cover in a stainless-steel or aluminum frame. Include interpretation and describe appropriate response for displays and signals. Briefly describe the functional operation of the system under normal, alarm, and trouble conditions.

2.8 EMERGENCY POWER SUPPLY

A. General: Components include nickel-cadmium battery, recombinant lead acid battery; charger; and an automatic transfer switch.

1. Battery Nominal Life Expectancy: 10 years, minimum.

B. Battery Charger: Solid-state, fully automatic, variable-charging-rate type. Provide capacity for 150 percent of the connected system load while maintaining batteries at full charge. If batteries are fully

discharged, the charger recharges them completely within twenty four hours. Charger output is supervised as part of system power supply supervision.

C. Integral Automatic Transfer Switch: Transfers the load to the battery without loss of signals or status indications when normal power fails.

2.9 DIGITAL ALARM COMMUNICATOR TRANSMITTER

A. Listed and labeled under UL 864 and HQ ACC Fire Protection Standards and UFC 3-600-01.

B. Functional Performance: Unit receives an alarm, supervisory, or trouble signal from the FACP panel, and automatically captures one or two telephone lines and dials a preset number for a remote central station. When contact is made with the central station(s), the signal is transmitted. The unit supervises up to two telephone lines. Where supervising two lines, if service on either line is interrupted for longer than 45 seconds, the unit initiates a local trouble signal and transmits a signal indicating loss of telephone line to the remote alarm receiving station over the remaining line. When telephone service is restored, unit automatically reports that event to the central station. If service is lost on both telephone lines, the local trouble signal is initiated.

C. Secondary Power: Integral rechargeable battery and automatic charger. Battery capacity is adequate to comply with HQ ACC Fire Protection Standards and UFC 3-600-01 requirements.

D. Self Test: Conducted automatically every 24 hours with report transmitted to central station.

2.10 WIRE

A. NFPA 70, Types FPL, FPLR, or FPLP, as recommended by manufacturer.

B. Solid wire shall be used for all signal circuits, sized as recommended by manufacturer.

PART 3 - EXECUTION

3.1 EQUIPMENT INSTALLATION

A. Connect the FACP with a disconnect switch or breaker with breaker lock.

B. Mount FACP with top of cabinets not more than 72” above the finished floor.

C. Manual Pull Stations: Mount semi-flush in recessed back boxes.

D. Water-Flow Detectors and Valve Supervisory Switches: Connect for each sprinkler valve station required to be supervised.

E. Ceiling-Mounted Smoke Detectors: Not less than 4 inches from a sidewall to the near edge.

F. Smoke Detectors near Air Registers: Install no closer than 60 inches.

G. Provide an exterior horn.

H. Provide connection to fire sprinkler PIV valve.

I. Audible Alarm-Indicating Devices: Install not less than 6 inches below the ceiling. Install on flush-mounted back boxes with the device-operating mechanism concealed behind a grille. Combine audible and visible alarms at the same location into a single unit.

## 3.2 WIRING INSTALLATION

A. Wiring within Enclosures: Separate power-limited and non-power-limited conductors as recommended by the manufacturer. Install conductors parallel with or at right angles to sides and back of the enclosure. Bundle, lace, and train conductors to terminal points with no excess. Connect conductors that are terminated, spliced, or interrupted in any enclosure associated with the fire alarm system to terminal blocks. Mark each terminal according to the system's wiring diagrams. Make all connections with approved crimp-on terminal spade lugs, pressure-type terminal blocks, or plug connectors.

B. Cable Taps: Use numbered terminal strips in junction, pull and outlet boxes, cabinets, or equipment enclosures where circuit connections are made.

C. Color-Coding: Color-code fire alarm conductors differently from the normal building power wiring. Use one color-code for alarm circuit wiring and a different color-code for supervisory circuits. Color-code audible alarm-indicating circuits differently from alarm-initiating circuits. Use different colors for visible alarm-indicating devices. Paint fire alarm system junction boxes and covers red.

D. Install in conduit.

## 3.3 IDENTIFICATION

A. Identify system components, wiring, cabling, and terminals according to Division 16 Section "Basic Electrical Materials and Methods."

B. Install instructions frame in a location visible from the FACP.

C. Paint power-supply breaker red and lock. Label "FIRE ALARM."

## 3.4 FIELD QUALITY CONTROL

A. Manufacturer's Field Service: Engage a factory-authorized service representative to inspect field-assembled components and connections and to supervise pretesting, testing, and adjustment of the system. Report results in writing.

B. Final Test Notice: Provide a minimum of 10 days' notice in writing when the system is ready for final acceptance testing.

C. Minimum System Tests: Test the system according to procedures outlined in HQ ACC Fire Protection Standards and UFC 3-600-01. Minimum required tests are as follows:

1. Verify the absence of unwanted voltages between circuit conductors and ground.
2. Test all conductors for short circuits using an insulation-testing device.
3. With each circuit pair, short circuit at the far end of the circuit and measure the circuit resistance with an ohmmeter. Record the circuit resistance of each circuit on record drawings.
4. Verify that the control unit is in the normal condition as detailed in the manufacturer's operation and maintenance manual.

5. Test initiating and indicating circuits for proper signal transmission under open circuit conditions. One connection each should be opened at not less than 10 percent of initiating and indicating devices. Observe proper signal transmission according to class of wiring used.
6. Test each initiating and indicating device for alarm operation and proper response at the control unit. Test smoke detectors with actual products of combustion.
7. Test the system for all specified functions according to the approved operation and maintenance manual. Systematically initiate specified functional performance items at each station, including making all possible alarm and monitoring initiations and using all communications options. For each item, observe related performance at all devices required to be affected by the item under all system sequences. Observe indicating lights, displays, signal tones.
8. Test Both Primary and Secondary Power: Verify by test that the secondary power system is capable of operating the system for the period and in the manner specified.

D. Retesting: Correct deficiencies indicated by tests and completely retest work affected by such deficiencies. Verify by the system test that the total system meets Specifications and complies with applicable standards.

## 3.5 CLEANING AND ADJUSTING

A. Cleaning: Remove paint splatters and other spots, dirt, and debris. Touch up scratches and marred finish to match original finish. Clean unit internally using methods and materials recommended by manufacturer.

## 3.6 DEMONSTRATION

A. Engage a factory-authorized service representative to train Owner's maintenance personnel as specified below:

1. Train Owner's maintenance personnel on procedures and schedules for starting and stopping, troubleshooting, servicing, adjusting, and maintaining equipment and schedules. Provide a minimum of 4 hours' training.
2. Schedule training with Owner with at least seven days' advance notice.

## 3.7 ON-SITE ASSISTANCE

A. Occupancy Adjustments: When requested within one year of date of Substantial Completion, provide on-site assistance in adjusting sound levels, controls, and sensitivities to suit actual occupied conditions. Provide up to two requested visits to Project site for this purpose.

**END OF SECTION 268100**

**SECTION 072100 - THERMAL INSULATION**

PART 1 - GENERAL

1.1 RELATED DOCUMENTS

A. Drawings and general provisions of the Contract, including General and Supplementary Conditions and Division 01 Specification Sections, apply to this Section.

1.2 SUMMARY

A. This Section includes the following:

1. Perimeter insulation under slabs-on-grade.
2. Cavity-wall insulation.
3. Concealed building insulation.
4. Sound Insulation.
5. Vapor Barrier.

B. Related Sections include the following:

1. Division 03 Section “Concrete” to coordinate perimeter insulation..
2. Division 0 4 Section "Unit Masonry" for insulation installed in cavity walls and masonry cells.
3. Division 22 Section "Plumbing Insulation."
4. Division 23 Section "HVAC Insulation."

1.3 DEFINITIONS

A. Mineral-Fiber Insulation: Insulation composed of rock-wool fibers, slag-wool fibers, or glass fibers; produced in boards and blanket with latter formed into batts (flat-cut lengths) or rolls.

1.4 PERFORMANCE REQUIREMENTS

A. Plenum Rating: Provide glass-fiber insulation where indicated in ceiling plenums whose test performance is rated as follows for use in plenums as determined by testing identical products per "Erosion Test" and "Mold Growth and Humidity Test" described in UL 181, or on comparable tests from another standard acceptable to authorities having jurisdiction.

1. Erosion Test Results: Insulation shows no visible evidence of cracking, flaking, peeling, or delamination of interior surface of duct assembly, after testing for 4 hours at 2500-fpm air velocity.
2. Mold Growth and Humidity Test Results: Insulation shows no evidence of mold growth, delamination, or other deterioration due to the effects of high humidity, after inoculation with Chaetomium globosium on all surfaces and storing for 60 days at 100 percent relative humidity in the dark.

1.5 SUBMITTALS

A. Product Data: For each type of product indicated.

1.6 QUALITY ASSURANCE

A. Source Limitations: Obtain each type of building insulation through one source from a single manufacturer.

B. Fire-Test-Response Characteristics: Provide insulation and related materials with the fire-test-response characteristics indicated, as determined by testing identical products per test method indicated below by UL or another testing and inspecting agency acceptable to authorities having jurisdiction. Identify materials with appropriate markings of applicable testing and inspecting agency.

1. Surface-Burning Characteristics: ASTM E 84.
2. Fire-Resistance Ratings: ASTM E 119.
3. Combustion Characteristics: ASTM E 136.

1.7 DELIVERY, STORAGE, AND HANDLING

A. Protect insulation materials from physical damage and from deterioration by moisture, soiling, and other sources. Store inside and in a dry location. Comply with manufacturer's written instructions for handling, storing, and protecting during installation.

B. Protect plastic insulation as follows:

1. Do not expose to sunlight, except to extent necessary for period of installation and concealment.
2. Protect against ignition at all times. Do not deliver plastic insulating materials to Project site before installation time.
3. Complete installation and concealment of plastic materials as rapidly as possible in each area of construction.

PART 2 - PRODUCTS

2.1 MANUFACTURERS

A. In other Part 2 articles where titles below introduce lists, the following requirements apply to product selection:

1. Available Manufacturers: Subject to compliance with requirements, manufacturers offering products that may be incorporated into the Work include, but are not limited to, manufacturers specified.

2.2 FOAM-PLASTIC BOARD INSULATION

A. Extruded-Polystyrene Board Insulation: ASTM C 578, of type and density indicated below, with maximum flame-spread and smoke-developed indexes of 75 and 450, respectively:

1. Available Manufacturers:

a. Dow Chemical Company.
b. Owens Corning.

2. Type IV, 1.60 lb/cu. ft., unless otherwise indicated.

3. Thickness: As indicated on the drawings.

2.3 VAPOR BARRIER

A. 60 Mil polyethylene plastic sheeting

2.4 GLASS-FIBER BLANKET INSULATION

A. Available Manufacturers:

1. CertainTeed Corporation.
2. Johns Manville.
3. Owens Corning.

B. Unfaced, Glass-Fiber Blanket Insulation: ASTM C 665, Type I (blankets without membrane facing); consisting of fibers; with maximum flame-spread and smoke-developed indexes of 25 and 50, respectively; passing ASTM E 136 for combustion characteristics.

C. Where glass-fiber blanket insulation is indicated by the following thicknesses, provide blankets in batt or roll form with thermal resistances indicated:

1. 3” thick sound batts at dividing Office walls.

2. 10-1/4 inches thick with a thermal resistance of 30 deg F x h x sq. ft./Btu at 75 deg F.

2.5 AUXILIARY INSULATING MATERIALS

A. Adhesive for Bonding Insulation: Product with demonstrated capability to bond insulation securely to substrates indicated without damaging insulation and substrates.

B. Eave Ventilation Troughs: Preformed, rigid fiberboard or plastic sheets designed and sized to fit between roof framing members and to provide cross ventilation between insulated attic spaces and vented eaves.

PART 3 - EXECUTION

3.1 EXAMINATION

A. Examine substrates and conditions, with Installer present, for compliance with requirements of Sections in which substrates and related work are specified and for other conditions affecting performance.

1. Proceed with installation only after unsatisfactory conditions have been corrected.

3.2 PREPARATION

A. Clean substrates of substances harmful to insulation or vapor retarders, including removing projections capable of puncturing vapor retarders or of interfering with insulation attachment.

3.3 INSTALLATION, GENERAL

A. Comply with insulation manufacturer's written instructions applicable to products and application indicated.

B. Install insulation that is undamaged, dry, and unsoiled and that has not been left exposed at any time to ice, rain, and snow.

C. Extend insulation in thickness indicated to envelop entire area to be insulated. Cut and fit tightly around obstructions and fill voids with insulation. Remove projections that interfere with placement.

D. Water-Piping Coordination: If water piping is located within insulated exterior walls, coordinate location of piping to ensure that it is placed on warm side of insulation and insulation encapsulates piping.

E. For preformed insulating units, provide sizes to fit applications indicated and selected from manufacturer's standard thicknesses, widths, and lengths. Apply single layer of insulation units to produce thickness indicated unless multiple layers are otherwise shown or required to make up total thickness.

3.4 INSTALLATION OF VAPOR BARRIER

A. Install vapor barrier on underside of wood trusses before drywall installation. Cover entire bottom cord of trusses with vapor barrier. Use stapes to secure vapor barrier to trusses.

3.5 INSTALLATION OF CAVITY-WALL INSULATION

A. On units of foam-plastic board insulation, install pads of adhesive spaced approximately 24 inches o.c. both ways on inside face, and as recommended by manufacturer. Fit courses of insulation between wall ties and other obstructions, with edges butted tightly in both directions. Press units firmly against inside substrates indicated.

1. Supplement adhesive attachment of insulation by securing boards with two-piece wall ties designed for this purpose and specified in Division 04 Section "Unit Masonry."

3.6 INSTALLATION OF GENERAL BUILDING INSULATION

A. Apply insulation units to substrates by method indicated, complying with manufacturer's written instructions. If no specific method is indicated, bond units to substrate with adhesive or use mechanical anchorage to provide permanent placement and support of units.

B. Seal joints between foam-plastic insulation units by applying adhesive, mastic, or sealant to edges of each unit to form a tight seal as units are shoved into place. Fill voids in completed installation with adhesive, mastic, or sealant as recommended by insulation manufacturer.

C. Install mineral-fiber insulation in cavities formed by framing members according to the following requirements:

1. Use insulation widths and lengths that fill the cavities formed by framing members. If more than one length is required to fill cavity, provide lengths that will produce a snug fit between ends.
2. Place insulation in cavities formed by framing members to produce a friction fit between edges of insulation and adjoining framing members.
3. Maintain 3-inch (76-mm) clearance of insulation around recessed lighting fixtures.
4. Install eave ventilation troughs between roof framing members in insulated attic spaces at vented eaves.
5. For metal-framed wall cavities where cavity heights exceed 96 inches, support unfaced blankets mechanically and support faced blankets by taping flanges of insulation to flanges of metal studs.
6. For wood-framed construction, install mineral-fiber blankets according to ASTM C 1320.

D. Install board insulation in curtain-wall construction where indicated on Drawings according to curtain-wall manufacturer's written instructions.

1. Retain insulation in place by metal clips and straps or integral pockets within window frames, spaced at intervals recommended in writing by insulation manufacturer to hold insulation securely in place without touching spandrel glass. Maintain cavity width of dimension indicated between insulation and glass.
2. Install insulation where it contacts perimeter fire-containment system to prevent insulation from bowing under pressure from perimeter fire-containment system.

3.7 PROTECTION

A. Protect installed insulation from damage due to harmful weather exposures, physical abuse, and other causes. Provide temporary coverings or enclosures where insulation is subject to abuse and cannot be concealed and protected by permanent construction immediately after installation.

**END OF SECTION 072100**

**SECTION 074113 - METAL ROOF PANELS**

PART 1 - GENERAL

1.1 RELATED DOCUMENTS

A. Drawings and general provisions of the Contract, including General and Supplementary Conditions and Division 01 Specification Sections, apply to this Section.

1.2 SUMMARY

A. Section Includes:

1. Standing-seam metal roof panels.

B. Related Sections:

1. Division 07 Section "Sheet Metal Flashing and Trim" for field-formed flashings, roof drainage systems, and other sheet metal work not part of metal roof panel assemblies.
2. Division 07 Section "Joint Sealants" for field-applied sealants not otherwise specified in this Section.

1.3 DEFINITIONS

A. Metal Roof Panel Assembly: Metal roof panels, attachment system components, miscellaneous metal framing, thermal insulation, and accessories necessary for a complete weathertight roofing system.

1.4 PERFORMANCE REQUIREMENTS

A. General Performance: Metal roof panels shall comply with performance requirements without failure due to defective manufacture, fabrication, installation, or other defects in construction.

B. Air Infiltration: Air leakage through assembly of not more than 0.06 cfm/sq. ft. of roof area when tested according to ASTM E 1680 at the following test-pressure difference:

1. Test-Pressure Difference: Positive and negative 1.57 lbf/sq. ft.

C. Water Penetration: No water penetration when tested according to ASTM E 1646 at the following test-pressure difference:
1. Test-Pressure Difference: 20 percent of positive design wind pressure, but not less than 6.24 lbf/sq. ft. and not more than 12.0 lbf/sq. ft.
2. Positive Preload Test-Pressure Difference: Greater than or equal to 15.0 lbf/sq. ft. and the greater of 75 percent of building live load or 50 percent of building design positive wind-pressure difference.
3. Negative Preload Test-Pressure Difference: 50 percent of design wind-uplift-pressure difference.

D. Hydrostatic-Head Resistance: No water penetration when tested according to ASTM E 2140.

E. Wind-Uplift Resistance: Provide metal roof panel assemblies that comply with UL 580 for wind-uplift-resistance class indicated.

1. Uplift Rating: UL 90.

F. FMG Listing: Provide metal roof panels and component materials that comply with requirements in FMG 4471 as part of a panel roofing system and that are listed in FMG's "Approval Guide" for Class 1 or noncombustible construction, as applicable. Identify materials with FMG markings.

1. Fire/Windstorm Classification: Class 1A-90.
2. Hail Resistance: SH.

G. Structural Performance: Provide metal roof panel assemblies capable of withstanding the effects of gravity loads and the following loads and stresses within limits and under conditions indicated, based on testing according to ASTM E 1592:

1. Wind Loads: Determine loads based on the following minimum design wind pressures:

a. Uniform pressure of30 lbf/sq. ft., acting inward or outward.

2. Snow Loads: 30 lbf/sq. ft.
3. Deflection Limits: Metal roof panel assemblies shall withstand wind and snow loads with vertical deflections no greater than 1/240 of the span.

H. Thermal Movements: Allow for thermal movements resulting from ambient and surface temperature changes. Base calculations on surface temperatures of materials due to both solar heat gain and nighttime-sky heat loss.

1. Temperature Change (Range): 120 deg F, ambient; 180 deg F, material surfaces.

I. Energy Performance: Provide roof panels with initial solar reflectance not less than 0.25.

## 1.5 SUBMITTALS

A. Product Data: For each type of product indicated. Include construction details, material descriptions, dimensions of individual components and profiles, and finishes for each type of roof panel and accessory.

B. Shop Drawings: Show fabrication and installation layouts of metal roof panels; details of edge conditions, side-seam and endlap joints, panel profiles, corners, anchorages, trim, flashings, closures, and accessories; and special details. Distinguish between factory- and field-assembled work.

1. Accessories: Include details of the following items, at a scale of not less than 1-1/2 inches per 12 inches:

a. Flashing and trim.
b. Snow guards.

C. Samples for Verification: For each type of exposed finish required, prepared on Samples of size indicated below:

1. Metal Roof Panels: 12 inches long by actual panel width. Include fasteners, closures, and other metal roof panel accessories.

D. Manufacturer Certificates: Signed by manufacturer certifying that roof panels comply with energy performance requirements specified in "Performance Requirements" Article.

1. Submit evidence of meeting performance requirements.

1.6 QUALITY ASSURANCE

A. Installer Qualifications: An employer of workers trained and approved by manufacturer.

B. Testing Agency Qualifications: Qualified according to ASTM E 329 for testing indicated.

C. Source Limitations: Obtain each type of metal roof panels from single source from single manufacturer.

D. Surface-Burning Characteristics: Provide metal roof panels having insulation core material with the following surface-burning characteristics as determined by testing identical products according to ASTM E 84 by a qualified testing agency. Identify products with appropriate markings of applicable testing agency.

1. Flame-Spread Index: 25 or less.
2. Smoke-Developed Index: 450 or less.

E. Fire-Resistance Ratings: Where indicated, provide metal roof panels identical to those of assemblies tested for fire resistance per ASTM E 119 by a qualified testing agency. Identify products with appropriate markings of applicable testing agency.

1. Indicate design designations from UL's "Fire Resistance Directory" or from the listings of another qualified testing agency.
2. Combustion Characteristics: ASTM E 136.

1.7 DELIVERY, STORAGE, AND HANDLING

A. Deliver components, sheets, metal roof panels, and other manufactured items so as not to be damaged or deformed. Package metal roof panels for protection during transportation and handling.

B. Unload, store, and erect metal roof panels in a manner to prevent bending, warping, twisting, and surface damage.

C. Stack metal roof panels on platforms or pallets, covered with suitable weathertight and ventilated covering. Store metal roof panels to ensure dryness. Do not store metal roof panels in contact with other materials that might cause staining, denting, or other surface damage.

D. Protect strippable protective covering on metal roof panels from exposure to sunlight and high humidity, except to extent necessary for period of metal roof panel installation.

1.8 PROJECT CONDITIONS

A. Weather Limitations: Proceed with installation only when existing and forecasted weather conditions permit metal roof panel work to be performed according to manufacturer's written instructions and warranty requirements.

B. Field Measurements: Verify actual dimensions of construction contiguous with metal roof panels by field measurements before fabrication.

1.9 COORDINATION

A. Coordinate sizes and locations of roof curbs, equipment supports, and roof penetrations with actual equipment provided.

B. Coordinate metal roof panels with rain drainage work, flashing, trim, and construction of other adjoining work to provide a leakproof, secure, and noncorrosive installation.

1.10 WARRANTY

A. Special Warranty on Panel Finishes: Manufacturer's standard form in which manufacturer agrees to repair finish or replace metal roof panels that show evidence of deterioration of factory-applied finishes within specified warranty period.

1. Exposed Panel Finish: Deterioration includes, but is not limited to, the following:

a. Color fading more than 5 Hunter units when tested according to ASTM D 2244.
b. Chalking in excess of a No. 8 rating when tested according to ASTM D 4214.
c. Cracking, checking, peeling, or failure of paint to adhere to bare metal.

2. Finish Warranty Period: 10 years from date of Substantial Completion.

B. Special Weathertightness Warranty for Standing-Seam Metal Roof Panels: Manufacturer's standard form in which manufacturer agrees to repair or replace standing-seam metal roof panel assemblies that fail to remain weathertight, including leaks, within specified warranty period.

1. Warranty Period: 20 years from date of Substantial Completion.

PART 2 - PRODUCTS

2.1 PANEL MATERIALS

A. Metallic-Coated Steel Sheet: Restricted flatness steel sheet metallic coated by the hot-dip process and prepainted by the coil-coating process to comply with ASTM A 755.

1. Surface: Smooth, flat finish.
2. Zinc-Coated (Galvanized) Steel Sheet: ASTM A 653/A 653M, G90 (Z275) coating designation; structural quality
3. Exposed Coil-Coated Finish:

a. 2-Coat Fluoropolymer: AAMA 621. Fluoropolymer finish containing not less than 70 percent PVDF resin by weight in color coat. Prepare, pretreat, and apply coating to exposed metal surfaces to comply with coating and resin manufacturers' written instructions.

4. Concealed Finish: Apply pretreatment and manufacturer's standard white or light-colored acrylic or polyester backer finish, consisting of prime coat and wash coat with a minimum total dry film thickness of 0.5 mil.

B. Panel Sealants:

1. Sealant Tape: Pressure-sensitive, 100 percent solids, gray polyisobutylene compound sealant tape with release-paper backing. Provide permanently elastic, nonsag, nontoxic, nonstaining tape 1/2 inch wide and 1/8 inch thick.
2. Joint Sealant: ASTM C 920; elastomeric polyurethane, polysulfide, or silicone sealant; of type, grade, class, and use classifications required to seal joints in metal roof panels and remain weathertight; and as recommended in writing by metal roof panel manufacturer.
3. Butyl-Rubber-Based, Solvent-Release Sealant: ASTM C 1311. 0.02 perm

## 2.2 UNDERLAYMENT MATERIALS

A. Self-Adhering, High-Temperature Sheet: 30 to 40 mils thick minimum, consisting of slip-resisting, polyethylene-film top surface laminated to layer of butyl or SBS-modified asphalt adhesive, with release-paper backing; cold applied. Provide primer when recommended by underlayment manufacturer.

1. Thermal Stability: Stable after testing at 240 deg F; ASTM D 1970.
2. Low-Temperature Flexibility: Passes after testing at minus 20 deg F; ASTM D 1970.
3. Products: Subject to compliance with requirements, available products that may be incorporated into the Work include, but are not limited to, the following:

   a. Grace Construction Products; a unit of Grace, W. R. & Co.; Ultra.
   b. Owens Corning; WeatherLock Metal High Temperature Underlayment.

B. Slip Sheet: Manufacturer's recommended slip sheet, of type required for application.

## 2.3 MISCELLANEOUS MATERIALS

A. Panel Fasteners: Self-tapping screws, bolts, nuts, self-locking rivets and bolts, end-welded studs, and other suitable fasteners designed to withstand design loads. Provide exposed fasteners with heads matching color of metal roof panels by means of plastic caps or factory-applied coating. Provide EPDM, PVC, or neoprene sealing washers.

B. Bituminous Coating: Cold-applied asphalt mastic, SSPC-Paint 12, compounded for 15-mil dry film thickness per coat. Provide inert-type noncorrosive compound free of asbestos fibers, sulfur components, and other deleterious impurities.

## 2.4 STANDING-SEAM METAL ROOF PANELS

A. General: Provide factory-formed metal roof panels designed to be installed by lapping and interconnecting raised side edges of adjacent panels with joint type indicated and mechanically attaching panels to supports using concealed clips in side laps. Include clips, cleats, pressure plates, and accessories required for weathertight installation.

1. Steel Panel Systems: Unless more stringent requirements are indicated, comply with ASTM E 1514.

B. Vertical-Rib, Seamed-Joint, Standing-Seam Metal Roof Panels : Formed with vertical ribs at panel edges and flat pan between ribs; designed for sequential installation by mechanically attaching panels to supports using concealed clips located under one side of panels and engaging opposite edge of adjacent panels, and mechanically seaming panels together.

1. Manufacturers: Subject to compliance with requirements, available manufacturers offering products that may be incorporated into the Work include, but are not limited to, the following:

   a. Firestone Unaclad "UC-6RS", 12" panel with 1 ½" ribs, Sierra Tan.

2. Material: Zinc-coated (galvanized) steel sheet, 0.022-inch nominal thickness.

   a. Exterior Finish: 2-coat fluoropolymer.
   b. Color: "Unaclad, Sierra Tan".

3. Clips: Fixed.

   a. Material: 0.028-inch-nominal thickness, zinc-coated (galvanized) steel sheet.

4. Joint Type: Double folded.
5. Panel Coverage: 12 inches.
6. Panel Height: 1.5 inches.

## 2.5 ACCESSORIES

A. Roof Panel Accessories: Provide components approved by roof panel manufacturer and as required for a complete metal roof panel assembly including trim, copings, fasciae, corner units, ridge closures, clips, flashings, sealants, gaskets, fillers, closure strips, and similar items. Match material and finish of metal roof panels unless otherwise indicated.

   1. Closures: Provide closures at eaves and ridges, fabricated of same metal as metal roof panels.
   2. Closure Strips: Closed-cell, expanded, cellular, rubber or crosslinked, polyolefin-foam or closed-cell laminated polyethylene; minimum 1-inch- thick, flexible closure strips; cut or premolded to match metal roof panel profile. Provide closure strips where indicated or necessary to ensure weathertight construction.
   3. Backing Plates: Provide metal backing plates at panel end splices, fabricated from material recommended by manufacturer.

B. Flashing and Trim: Formed from same material as roof panels, prepainted with coil coating, minimum 0.018 inch thick. Provide flashing and trim as required to seal against weather and to provide finished appearance. Locations include, but are not limited to, eaves, rakes, corners, bases, framed openings, ridges, fasciae, and fillers. Finish flashing and trim with same finish system as adjacent metal roof panels.

## 2.6 SNOW GUARDS

A. Snow Guards: Prefabricated, noncorrosive units designed to be installed without penetrating metal roof panels, and complete with predrilled holes, clamps, or hooks for anchoring.

   1. Surface-Mounted, Plastic, Stop-Type Snow Guards: Clear polycarbonate stops designed for attachment to pan surface of metal roof panels using construction adhesive, silicone or polyurethane sealant, or adhesive tape.

a. Products: Subject to compliance with requirements, available products that may be incorporated into the Work include, but are not limited to, the following:

1) SNOBLOX.
2) Snojax Inc.
3) Firestone, Unaclad.

2.7 FABRICATION

A. Fabricate and finish metal roof panels and accessories at the factory to greatest extent possible, by manufacturer's standard procedures and processes and as necessary to fulfill indicated performance requirements. Comply with indicated profiles and with dimensional and structural requirements.

B. Provide panel profile, including major ribs and intermediate stiffening ribs, if any, for full length of panel.

C. Fabricate metal roof panel side laps with factory-installed captive gaskets or separator strips that provide a tight seal and prevent metal-to-metal contact, in a manner that will seal weathertight and minimize noise from movements within panel assembly.

D. Sheet Metal Accessories: Fabricate flashing and trim to comply with recommendations in SMACNA's "Architectural Sheet Metal Manual" that apply to the design, dimensions, metal, and other characteristics of item indicated.

1. Form exposed sheet metal accessories that are without excessive oil canning, buckling, and tool marks and that are true to line and levels indicated, with exposed edges folded back to form hems.
2. End Seams for Other Than Aluminum: Fabricate nonmoving seams with flat-lock seams. Tin edges to be seamed, form seams, and solder.
3. Sealed Joints: Form nonexpansion but movable joints in metal to accommodate elastomeric sealant to comply with SMACNA standards.
4. Conceal fasteners and expansion provisions where possible. Exposed fasteners are not allowed on faces of accessories exposed to view.
5. Fabricate cleats and attachment devices of size and metal thickness recommended by SMACNA's "Architectural Sheet Metal Manual" or by metal roof panel manufacturer for application, but not less than thickness of metal being secured.

2.8 FINISHES

A. Comply with NAAMM's "Metal Finishes Manual for Architectural and Metal Products" for recommendations for applying and designating finishes.

B. Protect mechanical and painted finishes on exposed surfaces from damage by applying a strippable, temporary protective covering before shipping.

C. Appearance of Finished Work: Noticeable variations in same piece are not acceptable. Variations in appearance of adjoining components are acceptable if they are within the range of approved Samples and are assembled or installed to minimize contrast.

## PART 3 - EXECUTION

### 3.1 EXAMINATION

A. Examine substrates, areas, and conditions, with Installer present, for compliance with requirements for installation tolerances, metal roof panel supports, and other conditions affecting performance of the Work.

B. Examine primary and secondary roof framing to verify that rafters, purlins, angles, channels, and other structural panel support members and anchorages have been installed within alignment tolerances required by metal roof panel manufacturer.

C. Examine solid roof sheathing to verify that sheathing joints are supported by framing or blocking and that installation is within flatness tolerances required by metal roof panel manufacturer.

D. Examine roughing-in for components and systems penetrating metal roof panels to verify actual locations of penetrations relative to seam locations of metal roof panels before metal roof panel installation.

E. For the record, prepare written report, endorsed by Installer, listing conditions detrimental to performance of the Work.

F. Proceed with installation only after unsatisfactory conditions have been corrected.

### 3.2 PREPARATION

A. Clean substrates of substances harmful to insulation, including removing projections capable of interfering with insulation attachment.

B. Miscellaneous Framing: Install subpurlins, eave angles, furring, and other miscellaneous roof panel support members and anchorage according to metal roof panel manufacturer's written instructions.

### 3.3 UNDERLAYMENT INSTALLATION

A. Self-Adhering Sheet Underlayment: Apply primer if required by manufacturer. Comply with temperature restrictions of underlayment manufacturer for installation. Apply at locations indicated below and as recommended by the roofing panel manufacturer, wrinkle free, in shingle fashion to shed water, and with end laps of not less than 6 inches staggered 24 inches between courses. Overlap side edges not less than 3-1/2 inches. Roll laps with roller. Cover underlayment within 14 days.

1. Roof perimeter for a distance up from eaves of 36 inches beyond interior wall line.
2. Valleys, from lowest point to highest point, for a distance on each side of . Overlap ends of sheets not less than 6 inches.
3. Rake edges for a distance of 18 inches.
4. Hips and ridges for a distance on each side of 18 inches.
5. Roof to wall intersections for a distance from wall of 18 inches.
6. Around dormers, chimneys, skylights, and other penetrating elements for a distance from element of 18 inches.

B. Apply slip sheet over underlayment before installing metal roof panels.

C. Install flashings to cover underlayment to comply with requirements specified in Division 07 Section "Sheet Metal Flashing and Trim."

3.4 METAL ROOF PANEL INSTALLATION, GENERAL

A. Provide metal roof panels of full length from eave to ridge unless otherwise indicated or restricted by shipping limitations.

B. Thermal Movement. Rigidly fasten metal roof panels to structure at one and only one location for each panel. Allow remainder of panel to move freely for thermal expansion and contraction. Predrill panels for fasteners.

1. Point of Fixity: Fasten each panel along a single line of fixing located as recommended by the panel manufacturer.
2. Avoid attaching accessories through roof panels in a manner that will inhibit thermal movement.

C. Install metal roof panels as follows:

1. Commence metal roof panel installation and install minimum of 200 sq. ft. in presence of factory-authorized representative.
2. Field cutting of metal panels by torch is not permitted.
3. Locate and space fastenings in uniform vertical and horizontal alignment.
4. Flash and seal metal roof panels with weather closures at eaves, rakes, and perimeter of all openings.
5. Install ridge and hip caps as metal roof panel work proceeds.
6. End Splices: Locate panel end splices over, but not attached to, structural supports. Stagger panel end splices to avoid a four-panel splice condition.
7. Install metal flashing to allow moisture to run over and off metal roof panels.

D. Fasteners:

1. Steel Roof Panels: Use stainless-steel fasteners for surfaces exposed to the exterior and galvanized-steel fasteners for surfaces exposed to the interior.

E. Anchor Clips: Anchor metal roof panels and other components of the Work securely in place, using manufacturer's approved fasteners according to manufacturers' written instructions.

F. Metal Protection: Where dissimilar metals will contact each other or corrosive substrates, protect against galvanic action by painting contact surfaces with bituminous coating, by applying rubberized-asphalt underlayment to each contact surface, or by other permanent separation as recommended by metal roof panel manufacturer.

1. Coat back side of roof panels with bituminous coating where roof panels will contact wood, ferrous metal, or cementitious construction.

G. Joint Sealers: Install gaskets, joint fillers, and sealants where indicated and where required for weatherproof performance of metal roof panel assemblies. Provide types of gaskets, fillers, and sealants indicated or, if not indicated, types recommended by metal roof panel manufacturer.

1. Seal metal roof panel end laps with double beads of tape or sealant, full width of panel. Seal side joints where recommended by metal roof panel manufacturer.
2. Prepare joints and apply sealants to comply with requirements in Division 07 Section "Joint Sealants."

## 3.5 METAL ROOF PANEL INSTALLATION

A. Standing-Seam Metal Roof Panels: Fasten metal roof panels to supports with concealed clips at each standing-seam joint at location, spacing, and with fasteners recommended by manufacturer.

1. Install clips to supports with self-tapping fasteners.
2. Install pressure plates at locations indicated in manufacturer's written installation instructions.
3. Snap Joint: Nest standing seams and fasten together by interlocking and completely engaging factory-applied sealant.
4. Seamed Joint: Crimp standing seams with manufacturer-approved, motorized seamer tool so clip, metal roof panel, and factory-applied sealant are completely engaged.

## 3.6 ACCESSORY INSTALLATION

A. General: Install accessories with positive anchorage to building and weathertight mounting and provide for thermal expansion. Coordinate installation with flashings and other components.

1. Install components required for a complete metal roof panel assembly including trim, copings, ridge closures, seam covers, flashings, sealants, gaskets, fillers, closure strips, and similar items.

B. Flashing and Trim: Comply with performance requirements, manufacturer's written installation instructions, and SMACNA's "Architectural Sheet Metal Manual." Provide concealed fasteners where possible, and set units true to line and level as indicated. Install work with laps, joints, and seams that will be permanently watertight and weather resistant.

1. Install exposed flashing and trim that is without excessive oil canning, buckling, and tool marks and that is true to line and levels indicated, with exposed edges folded back to form hems. Install sheet metal flashing and trim to fit substrates and to result in waterproof and weather-resistant performance.
2. Expansion Provisions: Provide for thermal expansion of exposed flashing and trim. Space movement joints at a maximum of 10 feet with no joints allowed within 24 inches of corner or intersection. Where lapped expansion provisions cannot be used or would not be sufficiently weather resistant and waterproof, form expansion joints of intermeshing hooked flanges, not less than 1 inch deep, filled with mastic sealant (concealed within joints).

C. Pipe Flashing: Form flashing around pipe penetration and metal roof panels. Fasten and seal to metal roof panels as recommended by manufacturer.

## 3.7 SNOW GUARD INSTALLATION

A. Stop-Type Snow Guards: Attach snow guards to metal roof panels with adhesive, sealant, or adhesive tape, as recommended by manufacturer. Do not use fasteners that will penetrate metal roof panels.

## 3.8 ERECTION TOLERANCES

A. Installation Tolerances: Shim and align metal roof panel units within installed tolerance of 1/4 inch in 20 feet on slope and location lines as indicated and within 1/8-inch offset of adjoining faces and of alignment of matching profiles.

3.9 FIELD QUALITY CONTROL

A. Manufacturer's Field Service: Engage a factory-authorized service representative to inspect metal roof panel installation, including accessories. Report results in writing.

B. Remove and replace applications of metal roof panels where inspections indicate that they do not comply with specified requirements.

C. Additional inspections, at Contractor's expense, will be performed to determine compliance of replaced or additional work with specified requirements.

3.10 CLEANING

A. Remove temporary protective coverings and strippable films, if any, as metal roof panels are installed unless otherwise indicated in manufacturer's written installation instructions. On completion of metal roof panel installation, clean finished surfaces as recommended by metal roof panel manufacturer. Maintain in a clean condition during construction.

B. Replace metal roof panels that have been damaged or have deteriorated beyond successful repair by finish touchup or similar minor repair procedures.

**END OF SECTION 074113**

# SECTION 077100 - ROOF SPECIALTIES

## PART 1 - GENERAL

### 1.1 RELATED DOCUMENTS

A. Drawings and general provisions of the Contract, including General and Supplementary Conditions and Division 01 Specification Sections, apply to this Section.

### 1.2 SUMMARY

A. Section Includes:

1. Roof-edge flashings.
2. Roof-edge drainage systems.

B. Related Sections:

1. Division 06 Section "Rough Carpentry" for wood nailers, curbs, and blocking.
2. Division 07 Section "Metal Roof Panels" for roof-edge drainage-system components provided by metal-roof-panel manufacturer.
3. Division 07 Section "Joint Sealants" for field-applied sealants between roof specialties and adjacent materials.

### 1.3 PERFORMANCE REQUIREMENTS

A. General Performance: Roof specialties shall withstand exposure to weather and resist thermally induced movement without failure, rattling, leaking, or fastener disengagement due to defective manufacture, fabrication, installation, or other defects in construction.

B. Thermal Movements: Allow for thermal movements from ambient and surface temperature changes to prevent buckling, opening of joints, hole elongation, overstressing of components, failure of joint sealants, failure of connections, and other detrimental effects. Provide clips that resist rotation and avoid shear stress as a result of thermal movements. Base calculations on surface temperatures of materials due to both solar heat gain and nighttime-sky heat loss.

1. Temperature Change (Range): 120 deg F, ambient; 180 deg F, material surfaces.

### 1.4 SUBMITTALS

A. Shop Drawings: For roof specialties. Include plans, elevations, expansion-joint locations, keyed details, and attachments to other work. Distinguish between plant- and field-assembled work. Include the following:

1. Details for expansion and contraction; locations of expansion joints, including direction of expansion and contraction.
2. Pattern of seams and layout of fasteners, cleats, clips, and other attachments.
3. Details of termination points and assemblies, including fixed points.
4. Details of special conditions.

B. Samples for Verification: For roof-edge flashings and roof-edge drainage systems made from 12-inch lengths of full-size components including fasteners, cover joints, accessories, and attachments.

1.5 DELIVERY, STORAGE, AND HANDLING

A. Do not store roof specialties in contact with other materials that might cause staining, denting, or other surface damage. Store roof specialties away from uncured concrete and masonry.

B. Protect strippable protective covering on roof specialties from exposure to sunlight and high humidity, except to extent necessary for the period of roof specialties installation.

1.6 WARRANTY

A. Special Warranty on Painted Finishes: Manufacturer's standard form in which manufacturer agrees to repair finish or replace roof specialties that show evidence of deterioration of factory-applied finishes within specified warranty period.

1. Fluoropolymer Finish: Deterioration includes, but is not limited to, the following:

a. Color fading more than 5 Hunter units when tested according to ASTM D 2244.
b. Chalking in excess of a No. 8 rating when tested according to ASTM D 4214.
c. Cracking, checking, peeling, or failure of paint to adhere to bare metal.

2. Finish Warranty Period: 10 years from date of Substantial Completion.

PART 2 - PRODUCTS

2.1 EXPOSED METALS

A. Zinc-Coated (Galvanized) Steel Sheet: ASTM A 653/A 653M, G90 coating designation.

1. Surface: Smooth, flat finish.
2. Mill-Phosphatized Finish: Manufacturer's standard for field painting.
3. Exposed Coil-Coated Finishes: Prepainted by the coil-coating process to comply with ASTM A 755/A 755M. Prepare, pretreat, and apply coating to exposed metal surfaces to comply with coating and resin manufacturers' written instructions.

a. Two-Coat Fluoropolymer: AAMA 621. System consisting of primer and fluoropolymer color topcoat containing not less than 70 percent PVDF resin by weight.

2.2 UNDERLAYMENT MATERIALS

A. Felt: ASTM D 226, Type II (No. 30), asphalt-saturated organic felt, nonperforated.

B. Self-Adhering, High-Temperature Sheet: Minimum 30 to 40 mils thick, consisting of slip-resisting polyethylene-film top surface laminated to layer of butyl or SBS-modified asphalt adhesive, with release-paper backing; cold applied. Provide primer when recommended by underlayment manufacturer.

1. Thermal Stability: ASTM D 1970; stable after testing at 240 deg F.
2. Low-Temperature Flexibility: ASTM D 1970; passes after testing at minus 20 deg F.

C. Polyethylene Sheet: 6-mil- thick polyethylene sheet complying with ASTM D 4397.

D. Slip Sheet: Building paper, 3-lb/100 sq. ft. minimum, rosin sized.

## 2.3 MISCELLANEOUS MATERIALS

A. General: Provide materials and types of fasteners, protective coatings, sealants, and other miscellaneous items required by manufacturer for a complete installation.

## 2.4 ROOF-EDGE FLASHINGS

A. Drip Edge: Manufactured roof-edge in section lengths not exceeding 12 feet. Provide field fabricated corner units.

1. Drip Edge: Fabricated from the following exposed metal:

a. Zinc-Coated Steel: Nominal 0.0209 inch thick .

## 2.5 ROOF-EDGE DRAINAGE SYSTEMS

A. Gutters: Manufactured in uniform section lengths not exceeding 12 feet, with matching corner units, ends, outlet tubes, and other accessories. Elevate back edge at least 1 inch above front edge. Furnish flat-stock gutter straps, gutter brackets, expansion joints, and expansion-joint covers fabricated from same metal as gutters.

1. Fabricate from the following exposed metal:

a. Zinc-Coated Steel: Nominal 0.028-inch thickness.

2. Gutter Profile: Box Style Gutters according to SMACNA's "Architectural Sheet Metal Manual."
3. Corners: Factory mitered and mechanically clinched and sealed watertight.
4. Gutter Supports: Straps with finish matching the gutters.

B. Downspouts: Plain rectangular complete with machine-crimped elbows, manufactured from the following exposed metal. Furnish with metal hangers, from same material as downspouts, and anchors.

1. Zinc-Coated Steel: Nominal 0.028-inch thickness.

C. Zinc-Coated Steel Finish: Two-coat fluoropolymer.

1. Color: Match the Metal Roof Panels (“Unaclad, Sierra Tan”).

## 2.6 GENERAL FINISH REQUIREMENTS

A. Comply with NAAMM's "Metal Finishes Manual for Architectural and Metal Products" for recommendations for applying and designating finishes.

B. Protect mechanical and painted finishes on exposed surfaces from damage by applying a strippable, temporary protective covering before shipping.

C. Appearance of Finished Work: Noticeable variations in same piece are not acceptable. Variations in appearance of adjoining components are acceptable if they are within the range of approved Samples and are assembled or installed to minimize contrast.

## PART 3 - EXECUTION

### 3.1 EXAMINATION

A. Examine substrates, areas, and conditions, with Installer present, to verify actual locations, dimensions, and other conditions affecting performance of the Work.

B. Examine walls, roof edges, and parapets for suitable conditions for roof specialties.

C. Verify that substrate is sound, dry, smooth, clean, sloped for drainage, and securely anchored.

D. Proceed with installation only after unsatisfactory conditions have been corrected.

### 3.2 INSTALLATION, GENERAL

A. General: Install roof specialties according to manufacturer's written instructions. Anchor roof specialties securely in place, with provisions for thermal and structural movement. Use fasteners, solder, protective coatings, separators, sealants, and other miscellaneous items as required to complete roof-specialty systems.

1. Install roof specialties level, plumb, true to line and elevation; with limited oil-canning and without warping, jogs in alignment, buckling, or tool marks.
2. Provide uniform, neat seams with minimum exposure of solder and sealant.
3. Install roof specialties to fit substrates and to result in watertight performance. Verify shapes and dimensions of surfaces to be covered before manufacture.
4. Torch cutting of roof specialties is not permitted.
5. Do not use graphite pencils to mark metal surfaces.

B. Metal Protection: Protect metals against galvanic action by separating dissimilar metals from contact with each other or with corrosive substrates by painting contact surfaces with bituminous coating or by other permanent separation as recommended by manufacturer.

C. Expansion Provisions: Allow for thermal expansion of exposed roof specialties.

1. Space movement joints at a maximum of 12 feet with no joints within 18 inches of corners or intersections unless otherwise shown on Drawings.
2. When ambient temperature at time of installation is between 40 and 70 deg F, set joint members for 50 percent movement each way. Adjust setting proportionately for installation at higher ambient temperatures.

D. Seal joints as required for watertight construction. Place sealant to be completely concealed in joint. Do not install sealants at temperatures below 40 deg F.

3.3 ROOF-EDGE FLASHING INSTALLATION

A. Install cleats, cants, and other anchoring and attachment accessories and devices with concealed fasteners.

B. Anchor roof edgings with manufacturer's required devices, fasteners, and fastener spacing to meet performance requirements.

3.4 ROOF-EDGE DRAINAGE-SYSTEM INSTALLATION

A. General: Install components to produce a complete roof-edge drainage system according to manufacturer's written instructions. Coordinate installation of roof perimeter flashing with installation of roof-edge drainage system.

B. Gutters: Join and seal gutter lengths. Allow for thermal expansion. Attach gutters to firmly anchored gutter supports spaced not more than 30 inches apart. Attach ends to make watertight joints. Slope to downspouts.

1. Install gutter with expansion joints at locations indicated but not exceeding 50 feet apart. Install expansion joint caps.

C. Downspouts: Join sections with manufacturer's standard telescoping joints. Provide hangers with fasteners designed to hold downspouts securely to walls and 1 inch away from walls; locate fasteners at top and bottom and at approximately 60 inches o.c.

1. Provide elbows at base of downspout to direct water away from building.

3.5 CLEANING AND PROTECTION

A. Clean exposed metal surfaces of substances that interfere with uniform oxidation and weathering.

B. Clean and neutralize flux materials. Clean off excess solder and sealants.

C. Remove temporary protective coverings and strippable films as roof specialties are installed. On completion of installation, clean finished surfaces including removing unused fasteners, metal filings, pop rivet stems, and pieces of flashing. Maintain roof specialties in a clean condition during construction.

D. Replace roof specialties that have been damaged or that cannot be successfully repaired by finish touchup or similar minor repair procedures.

**END OF SECTION 077100**

**SECTION 079200 - JOINT SEALANTS**

PART 1 - GENERAL

1.1 RELATED DOCUMENTS

A. Drawings and general provisions of the Contract, including General and Supplementary Conditions and Division 01 Specification Sections, apply to this Section.

1.2 SUMMARY

A. Section Includes:

1. Urethane joint sealants.
2. Latex joint sealants.

B. Related Sections:

1. Division 04 Section "Unit Masonry" for masonry control and expansion joint fillers and gaskets.
2. Division 09 Section "Gypsum Board" for sealing perimeter joints.
3. Division 09 Section "Tiling" for sealing tile joints.
4. Division 09 Section "Acoustical Panel Ceilings" for sealing edge moldings at perimeters with acoustical sealant.
5. Division 32 Section "Concrete Paving Joint Sealants" for sealing joints in pavements, walkways, and curbing.

1.3 SUBMITTALS

A. Product Data: For each joint-sealant product indicated.

B. Samples for Verification: For each kind and color of joint sealant required, provide Samples with joint sealants in 1/2-inch- wide joints formed between two 6-inch- long strips of material matching the appearance of exposed surfaces adjacent to joint sealants.

C. Qualification Data: For qualified Installer.

D. Product Test Reports: Based on evaluation of comprehensive tests performed by a qualified testing agency, indicating that sealants comply with requirements.

E. Warranties: Sample of special warranties.

1.4 QUALITY ASSURANCE

A. Installer Qualifications: Manufacturer's authorized representative who is trained and approved for installation of units required for this Project.

B. Source Limitations: Obtain each kind of joint sealant from single source from single manufacturer.

1.5 PROJECT CONDITIONS

A. Do not proceed with installation of joint sealants under the following conditions:

1. When ambient and substrate temperature conditions are outside limits permitted by joint-sealant manufacturer or are below 40 deg F.
2. When joint substrates are wet.
3. Where joint widths are less than those allowed by joint-sealant manufacturer for applications indicated.
4. Where contaminants capable of interfering with adhesion have not yet been removed from joint substrates.

1.6 WARRANTY

A. Special warranties specified in this article exclude deterioration or failure of joint sealants from the following:

1. Movement of the structure caused by structural settlement or errors attributable to design or construction resulting in stresses on the sealant exceeding sealant manufacturer's written specifications for sealant elongation and compression.
2. Disintegration of joint substrates from natural causes exceeding design specifications.
3. Mechanical damage caused by individuals, tools, or other outside agents.
4. Changes in sealant appearance caused by accumulation of dirt or other atmospheric contaminants.

PART 2 - PRODUCTS

2.1 MATERIALS, GENERAL

A. Compatibility: Provide joint sealants, backings, and other related materials that are compatible with one another and with joint substrates under conditions of service and application, as demonstrated by joint-sealant manufacturer, based on testing and field experience.

B. Stain-Test-Response Characteristics: Where sealants are specified to be nonstaining to porous substrates, provide products that have undergone testing according to ASTM C 1248 and have not stained porous joint substrates indicated for Project.

C. Suitability for Contact with Food: Where sealants are indicated for joints that will come in repeated contact with food, provide products that comply with 21 CFR 177.2600.

D. Colors of Exposed Joint Sealants: As selected by Architect from manufacturer's full range.

2.2 URETHANE JOINT SEALANTS

A. Single-Component, Nonsag, Urethane Joint Sealant: ASTM C 920, Type S, Grade NS, Class 25, for Use NT.

1. Products: Subject to compliance with requirements, available products that may be incorporated into the Work include, but are not limited to, the following:

a. Sonneborne, Division of ChemRex; NP1.
b. Tremco; Vulkem 116.

B. Multicomponent, Nonsag, Traffic-Grade, Urethane Joint Sealant: ASTM C 920, Type M, Grade NS, Class 25, for Use T.

1. Products: Subject to compliance with requirements, available products that may be incorporated into the Work include, but are not limited to, the following:

a. Sonneborne, Division of ChemRex; NP2.
b. Tremco Incorporated; Vulkem 322 DS.

2.3 LATEX JOINT SEALANTS

A. Latex Joint Sealant: Acrylic latex or siliconized acrylic latex, ASTM C 834, Type OP, Grade NF.

1. Products: Subject to compliance with requirements, available products that may be incorporated into the Work include, but are not limited to, the following:

a. Pecora Corporation; AC-20+.
b. Tremco Incorporated; Tremflex 834.

2.4 FIRE RESISTIVE JOINT SEALANT

A. Single component Nonsag fire resistive sealant:
1. Available Products:

a. “3M, Fire Barrier”
b. “Metacaulk”

2. Uses related to penetrations at fire rated assemblies.

2.5 JOINT SEALANT BACKING

A. General: Provide sealant backings of material that are nonstaining; are compatible with joint substrates, sealants, primers, and other joint fillers; and are approved for applications indicated by sealant manufacturer based on field experience and laboratory testing.

B. Cylindrical Sealant Backings: ASTM C 1330, Type C (closed-cell material with a surface skin), Type O (open-cell material), Type B (bicellular material with a surface skin) or any of the preceding types, as approved in writing by joint-sealant manufacturer for joint application indicated, and of size and density to control sealant depth and otherwise contribute to producing optimum sealant performance.

PART 3 - EXECUTION

3.1 EXAMINATION

A. Examine joints indicated to receive joint sealants, with Installer present, for compliance with requirements for joint configuration, installation tolerances, and other conditions affecting joint-sealant performance.

B. Proceed with installation only after unsatisfactory conditions have been corrected.

## 3.2 PREPARATION

A. Surface Cleaning of Joints: Clean out joints immediately before installing joint sealants to comply with joint-sealant manufacturer's written instructions and the following requirements:

1. Remove all foreign material from joint substrates that could interfere with adhesion of joint sealant, including dust, paints (except for permanent, protective coatings tested and approved for sealant adhesion and compatibility by sealant manufacturer), old joint sealants, oil, grease, waterproofing, water repellents, water, surface dirt, and frost.
2. Clean porous joint substrate surfaces by brushing, grinding, mechanical abrading, or a combination of these methods to produce a clean, sound substrate capable of developing optimum bond with joint sealants. Remove loose particles remaining after cleaning operations above by vacuuming or blowing out joints with oil-free compressed air. Porous joint substrates include but are not limited to the following:

    a. Concrete.
    b. Masonry.
    c. Unglazed surfaces of ceramic tile.

3. Remove laitance and form-release agents from concrete.

## 3.3 INSTALLATION OF JOINT SEALANTS

A. General: Comply with joint-sealant manufacturer's written installation instructions for products and applications indicated, unless more stringent requirements apply.

B. Sealant Installation Standard: Comply with recommendations in ASTM C 1193 for use of joint sealants as applicable to materials, applications, and conditions indicated.

C. Install sealant backings of kind indicated to support sealants during application and at position required to produce cross-sectional shapes and depths of installed sealants relative to joint widths that allow optimum sealant movement capability.

1. Do not leave gaps between ends of sealant backings.
2. Do not stretch, twist, puncture, or tear sealant backings.
3. Remove absorbent sealant backings that have become wet before sealant application and replace them with dry materials.

D. Install bond-breaker tape behind sealants where sealant backings are not used between sealants and backs of joints.

E. Install sealants using proven techniques that comply with the following and at the same time backings are installed:

1. Place sealants so they directly contact and fully wet joint substrates.
2. Completely fill recesses in each joint configuration.
3. Produce uniform, cross-sectional shapes and depths relative to joint widths that allow optimum sealant movement capability.

F. Tooling of Nonsag Sealants: Immediately after sealant application and before skinning or curing begins, tool sealants according to requirements specified in subparagraphs below to form smooth, uniform beads of configuration indicated; to eliminate air pockets; and to ensure contact and adhesion of sealant with sides of joint.

1. Remove excess sealant from surfaces adjacent to joints.
2. Use tooling agents that are approved in writing by sealant manufacturer and that do not discolor sealants or adjacent surfaces.
3. Provide concave joint profile per Figure 8A in ASTM C 1193, unless otherwise indicated.
4. Provide flush joint profile where indicated per Figure 8B in ASTM C 1193.
5. Provide recessed joint configuration of recess depth and at locations indicated per Figure 8C in ASTM C 1193.

## 3.4 FIELD QUALITY CONTROL

A. Evaluation of Field-Adhesion Test Results: Sealants not evidencing adhesive failure from testing or noncompliance with other indicated requirements will be considered satisfactory. Remove sealants that fail to adhere to joint substrates during testing or to comply with other requirements. Retest failed applications until test results prove sealants comply with indicated requirements.

## 3.5 CLEANING

A. Clean off excess sealant or sealant smears adjacent to joints as the Work progresses by methods and with cleaning materials approved in writing by manufacturers of joint sealants and of products in which joints occur.

## 3.6 PROTECTION

A. Protect joint sealants during and after curing period from contact with contaminating substances and from damage resulting from construction operations or other causes so sealants are without deterioration or damage at time of Substantial Completion. If, despite such protection, damage or deterioration occurs, cut out and remove damaged or deteriorated joint sealants immediately so installations with repaired areas are indistinguishable from original work.

## 3.7 JOINT-SEALANT SCHEDULE

A. Joint-Sealant Application: Exterior joints in horizontal traffic surfaces.

1. Joint Locations:

   a. Isolation and contraction joints in cast-in-place concrete slabs.

2. Urethane Joint Sealant: Multicomponent, nonsag, traffic grade, Class 25.
3. Joint-Sealant Color: As selected by Architect from manufacturer's full range of colors .

B. Joint-Sealant Application: Exterior joints in vertical surfaces and horizontal nontraffic surfaces.

1. Joint Locations:

   a. Control and expansion joints in unit masonry.
   b. Joints between metal panels.
   c. Joints between different materials listed above.
   d. Perimeter joints between materials listed above and frames of doors and windows.

2. Urethane Joint Sealant: Single component, nonsag, Class 25.
3. Joint-Sealant Color: As selected by Architect from manufacturer's full range of colors.

C. Joint-Sealant Application: Interior joints in vertical surfaces and horizontal nontraffic surfaces.

1. Joint Locations:

a. Control and expansion joints on exposed interior surfaces of exterior walls.
b. Perimeter joints of exterior openings where indicated.
c. Tile control and expansion joints.
d. Vertical joints on exposed surfaces of walls.
e. Perimeter joints between interior wall surfaces and frames of interior doors and windows.

2. Joint Sealant: Latex.
3. Joint-Sealant Color: As selected by Architect from manufacturer's full range of colors.

D. Joint-Sealant Application: Mildew-resistant interior joints in vertical surfaces and horizontal nontraffic surfaces.

1. Joint Sealant Location:

a. Joints between plumbing fixtures and adjoining walls, floors, and counters.
b. Tile control and expansion joints where indicated.

2. Joint-Sealant Color: As selected by Architect from manufacturer's full range of colors.

**END OF SECTION 079200**

# SECTION 081113 - HOLLOW METAL DOORS AND FRAMES

## PART 1 - GENERAL

### 1.1 RELATED DOCUMENTS

A. Drawings and general provisions of the Contract, including General and Supplementary Conditions and Division 01 Specification Sections, apply to this Section.

### 1.2 SUMMARY

A. Section Includes:

1. Standard hollow metal doors and frames.

B. Related Sections:

1. Division 04 Section "Unit Masonry" for embedding anchors for hollow metal work into masonry construction.
2. Division 08 Section "Door Hardware" for door hardware for hollow metal doors.
3. Division 09 Sections "Exterior Painting" and "Interior Painting" for field painting hollow metal doors and frames.

### 1.3 DEFINITIONS

A. Minimum Thickness: Minimum thickness of base metal without coatings.

B. Standard Hollow Metal Work: Hollow metal work fabricated according to ANSI/SDI A250.8.

### 1.4 SUBMITTALS

A. Product Data: For each type of product indicated. Include construction details, material descriptions, core descriptions and finishes.

B. Shop Drawings: Include the following:

1. Elevations of each door design.
2. Details of doors, including vertical and horizontal edge details and metal thicknesses.
3. Frame details for each frame type, including dimensioned profiles and metal thicknesses.
4. Locations of reinforcement and preparations for hardware.
5. Details of each different wall opening condition.
6. Details of anchorages, joints, field splices, and connections.

C. Other Action Submittals:

1. Schedule: Provide a schedule of hollow metal work prepared by or under the supervision of supplier, using same reference numbers for details and openings as those on Drawings. Coordinate with door hardware schedule.

D. Product Test Reports: Based on evaluation of comprehensive tests performed by a qualified testing agency, for each type of hollow metal door and frame assembly.

1.5 QUALITY ASSURANCE

A. Source Limitations: Obtain hollow metal work from single source from single manufacturer.

1.6 DELIVERY, STORAGE, AND HANDLING

A. Deliver hollow metal work palletized, wrapped, or crated to provide protection during transit and Project-site storage. Do not use nonvented plastic.

1. Provide additional protection to prevent damage to finish of factory-finished units.

B. Deliver welded frames with two removable spreader bars across bottom of frames, tack welded to jambs and mullions.

C. Store hollow metal work under cover at Project site. Place in stacks of five units maximum in a vertical position with heads up, spaced by blocking, on minimum 4-inch- high wood blocking. Do not store in a manner that traps excess humidity.

1. Provide minimum 1/4-inch space between each stacked door to permit air circulation.

1.7 PROJECT CONDITIONS

A. Field Measurements: Verify actual dimensions of openings by field measurements before fabrication.

1.8 COORDINATION

A. Coordinate installation of anchorages for hollow metal frames. Furnish setting drawings, templates, and directions for installing anchorages, including sleeves, concrete inserts, anchor bolts, and items with integral anchors. Deliver such items to Project site in time for installation.

PART 2 - PRODUCTS

2.1 MANUFACTURERS

A. Manufacturers: Subject to compliance with requirements, available manufacturers offering products that may be incorporated into the Work include, but are not limited to, the following:

1. Amweld Building Products, LLC.
2. Ceco Door Products; an Assa Abloy Group company.
3. Steelcraft; an Ingersoll-Rand company.
4. Windsor Republic Doors.

## 2.2 MATERIALS

A. Cold-Rolled Steel Sheet: ASTM A 1008/A 1008M, Commercial Steel (CS), Type B; suitable for exposed applications.

B. Hot-Rolled Steel Sheet: ASTM A 1011/A 1011M, Commercial Steel (CS), Type B; free of scale, pitting, or surface defects; pickled and oiled.

C. Metallic-Coated Steel Sheet: ASTM A 653/A 653M, Commercial Steel (CS), Type B; with minimum A40 metallic coating.

D. Frame Anchors: ASTM A 591/A 591M, Commercial Steel (CS), 40Z coating designation; mill phosphatized.

1. For anchors built into exterior walls, steel sheet complying with ASTM A 1008/A 1008M or ASTM A 1011/A 1011M, hot-dip galvanized according to ASTM A 153/A 153M, Class B.

E. Inserts, Bolts, and Fasteners: Hot-dip galvanized according to ASTM A 153/A 153M.

F. Powder-Actuated Fasteners in Concrete: Fastener system of type suitable for application indicated, fabricated from corrosion-resistant materials, with clips or other accessory devices for attaching hollow metal frames of type indicated.

G. Grout: ASTM C 476, except with a maximum slump of 4 inches, as measured according to ASTM C 143/C 143M.

H. Mineral-Fiber Insulation: ASTM C 665, Type I (blankets without membrane facing); consisting of fibers manufactured from slag or rock wool with 6- to 12-lb/cu. ft. density; with maximum flame-spread and smoke-development indexes of 25 and 50, respectively; passing ASTM E 136 for combustion characteristics.

I. Bituminous Coating: Cold-applied asphalt mastic, SSPC-Paint 12, compounded for 15-mil dry film thickness per coat. Provide inert-type noncorrosive compound free of asbestos fibers, sulfur components, and other deleterious impurities.

## 2.3 STANDARD HOLLOW METAL DOORS

A. General: Provide doors of design indicated, not less than thickness indicated; fabricated with smooth surfaces, without visible joints or seams on exposed faces unless otherwise indicated. Comply with ANSI/SDI A250.8 and ASTM F2248 where indicated.

1. Design: Flush panel.
2. Core Construction: Manufacturer's standard kraft-paper honeycomb, polystyrene, polyurethane, polyisocyanurate, mineral-board, or vertical steel-stiffener core.

a. Thermal-Rated (Insulated) Doors: Where indicated, provide doors fabricated with thermal-resistance value (R-value) of not less than 6.0 deg F x h x sq. ft./Btu when tested according to ASTM C 1363.

1) Locations: Exterior doors.

3. Vertical Edges for Single-Acting Doors: Manufacturer's standard.
a. Beveled Edge: 1/8 inch in 2 inches.

4. Top and Bottom Edges: Closed with flush or inverted 0.042-inch- thick, end closures or channels of same material as face sheets.
5. Tolerances: Comply with SDI 117, "Manufacturing Tolerances for Standard Steel Doors and Frames."

B. Exterior Doors: Face sheets fabricated from metallic-coated steel sheet. Provide doors complying with requirements indicated below by referencing ANSI/SDI A250.8 for level and model and ANSI/SDI A250.4 for physical performance level:

1. Level 3 and Physical Performance Level A (Extra Heavy Duty), Model 1 (Full Flush).

C. Interior Doors: Face sheets fabricated from cold-rolled steel sheet unless metallic-coated sheet is indicated. Provide doors complying with requirements indicated below by referencing ANSI/SDI A250.8 for level and model and ANSI/SDI A250.4 for physical performance level:

1. Level 3 and Physical Performance Level A (Extra Heavy Duty), Model 1 (Full Flush).

D. Hardware Reinforcement: Fabricate according to ANSI/SDI A250.6 with reinforcing plates from same material as door face sheets.

E. Fabricate concealed stiffeners and hardware reinforcement from either cold- or hot-rolled steel sheet.

## 2.4 STANDARD HOLLOW METAL FRAMES

A. General: Comply with ANSI/SDI A250.8 and ASTM F2248 where indicated. Comply with details indicated for type and profile.

B. Exterior Frames: Fabricated from metallic-coated steel sheet.

1. Fabricate frames with mitered or coped corners.
2. Fabricate frames as full profile welded unless otherwise indicated.
3. Frames for Level 3 Steel Doors: 0.053-inch- thick steel sheet.

C. Interior Frames: Fabricated from cold-rolled steel sheet unless metallic-coated sheet is indicated].

1. Fabricate frames with mitered or coped corners.
2. Fabricate frames as full profile welded unless otherwise indicated.
3. Frames for Level 3 Steel Doors: 0.053-inch- thick steel sheet.

D. Hardware Reinforcement: Fabricate according to ANSI/SDI A250.6 with reinforcement plates from same material as frames.

## 2.5 FRAME ANCHORS

A. Jamb Anchors:

1. Masonry Type: Adjustable strap-and-stirrup or T-shaped anchors to suit frame size, not less than 0.042 inch thick, with corrugated or perforated straps not less than 2 inches wide by 10 inches long; or wire anchors not less than 0.177 inch thick.
2. Stud-Wall Type: Designed to engage stud, welded to back of frames; not less than 0.042 inch thick.

B. Floor Anchors: Formed from same material as frames, not less than 0.042 inch thick, and as follows:

1. Separate Topping Concrete Slabs: Adjustable-type anchors with extension clips, allowing not less than 2-inch height adjustment. Terminate bottom of frames at finish floor surface.

## 2.6 STOPS AND MOLDINGS

A. Moldings for Glazed Lites in Doors: Minimum 0.032 inch thick, fabricated from same material as door face sheet in which they are installed.

B. Fixed Frame Moldings: Formed integral with hollow metal frames, a minimum of 5/8 inch high unless otherwise indicated.

C. Loose Stops for Glazed Lites in Frames: Minimum 0.032 inch thick, fabricated from same material as frames in which they are installed.

D. Terminated Stops: Terminate stops 6 inches above finish floor with a 45-degree angle cut, and close open end of stop with steel sheet closure. Cover opening in extension of frame with welded-steel filler plate, with welds ground smooth and flush with frame.

1. Provide terminated stops at interior frames only unless otherwise indicated.

## 2.7 ACCESSORIES

A. Grout Guards: Formed from same material as frames, not less than 0.016 inch thick.

## 2.8 FABRICATION

A. Fabricate hollow metal work to be rigid and free of defects, warp, or buckle. Accurately form metal to required sizes and profiles, with minimum radius for thickness of metal. Where practical, fit and assemble units in manufacturer's plant. To ensure proper assembly at Project site, clearly identify work that cannot be permanently factory assembled before shipment.

B. Tolerances: Fabricate hollow metal work to tolerances indicated in SDI 117.

C. Hollow Metal Doors:

1. Exterior Doors: Provide weep-hole openings in bottom of exterior doors to permit moisture to escape. Seal joints in top edges of doors against water penetration.
2. Glazed Lites: Factory cut openings in doors.

D. Hollow Metal Frames: Where frames are fabricated in sections due to shipping or handling limitations, provide alignment plates or angles at each joint, fabricated of same thickness metal as frames.

1. Welded Frames: Weld flush face joints continuously; grind, fill, dress, and make smooth, flush, and invisible.
2. Provide countersunk, flat- or oval-head exposed screws and bolts for exposed fasteners unless otherwise indicated.
3. Grout Guards: Weld guards to frame at back of hardware mortises in frames to be grouted.
4. Floor Anchors: Weld anchors to bottom of jambs and mullions with at least four spot welds per anchor.
5. Jamb Anchors: Provide number and spacing of anchors as follows:

a. Masonry Type: Locate anchors not more than 18 inches from top and bottom of frame. Space anchors not more than 32 inches o.c. and as follows:

1) Two anchors per jamb up to 60 inches high.
2) Three anchors per jamb from 60 to 90 inches high.
3) Four anchors per jamb from 90 to 120 inches high.
4) Four anchors per jamb plus 1 additional anchor per jamb for each 24 inches or fraction thereof above 120 inches high.

b. Stud-Wall Type: Locate anchors not more than 18 inches from top and bottom of frame. Space anchors not more than 32 inches o.c. and as follows:

1) Three anchors per jamb up to 60 inches high.
2) Four anchors per jamb from 60 to 90 inches high.
3) Five anchors per jamb from 90 to 96 inches high.
4) Five anchors per jamb plus 1 additional anchor per jamb for each 24 inches or fraction thereof above 96 inches high.
5) Two anchors per head for frames above 42 inches wide and mounted in metal-stud partitions.

6. Door Silencers: Except on weather-stripped doors, drill stops to receive door silencers as follows. Keep holes clear during construction.

a. Single-Door Frames: Drill stop in strike jamb to receive three door silencers.
b. Double-Door Frames: Drill stop in head jamb to receive two door silencers.

E. Fabricate concealed stiffeners, edge channels, and hardware reinforcement from either cold- or hot-rolled steel sheet.

F. Hardware Preparation: Factory prepare hollow metal work to receive templated mortised hardware; include cutouts, reinforcement, mortising, drilling, and tapping according to the Door Hardware Schedule and templates furnished as specified in Division 08 Section "Door Hardware."

1. Locate hardware as indicated, or if not indicated, according to ANSI/SDI A250.8.
2. Reinforce doors and frames to receive nontemplated, mortised and surface-mounted door hardware.
3. Comply with applicable requirements in ANSI/SDI A250.6 and ANSI/DHI A115 Series specifications for preparation of hollow metal work for hardware.
4. Coordinate locations of conduit and wiring boxes for electrical connections with Division 26 Sections.

G. Stops and Moldings: Provide stops and moldings around glazed lites where indicated. Form corners of stops and moldings with butted or mitered hairline joints.

1. Single Glazed Lites: Provide fixed stops and moldings welded on secure side of hollow metal work.
2. Multiple Glazed Lites: Provide fixed and removable stops and moldings so that each glazed lite is capable of being removed independently.
3. Provide fixed frame moldings on outside of exterior and on secure side of interior doors and frames.
4. Provide loose stops and moldings on inside of hollow metal work.
5. Coordinate rabbet width between fixed and removable stops with type of glazing and type of installation indicated.

2.9 STEEL FINISHES

A. Prime Finish: Apply manufacturer's standard primer immediately after cleaning and pretreating.

1. Shop Primer: Manufacturer's standard, fast-curing, lead- and chromate-free primer complying with ANSI/SDI A250.10 acceptance criteria; recommended by primer manufacturer for substrate; compatible with substrate and field-applied coatings despite prolonged exposure.

PART 3 - EXECUTION

3.1 EXAMINATION

A. Examine substrates, areas, and conditions, with Installer present, for compliance with requirements for installation tolerances and other conditions affecting performance of the Work.

B. Examine roughing-in for embedded and built-in anchors to verify actual locations before frame installation.

C. For the record, prepare written report, endorsed by Installer, listing conditions detrimental to performance of the Work.

D. Proceed with installation only after unsatisfactory conditions have been corrected.

3.2 PREPARATION

A. Remove welded-in shipping spreaders installed at factory. Restore exposed finish by grinding, filling, and dressing, as required to make repaired area smooth, flush, and invisible on exposed faces.

B. Prior to installation, adjust and securely brace welded hollow metal frames for squareness, alignment, twist, and plumbness to the following tolerances:

1. Squareness: Plus or minus 1/16 inch, measured at door rabbet on a line 90 degrees from jamb perpendicular to frame head.
2. Alignment: Plus or minus 1/16 inch, measured at jambs on a horizontal line parallel to plane of wall.
3. Twist: Plus or minus 1/16 inch, measured at opposite face corners of jambs on parallel lines, and perpendicular to plane of wall.
4. Plumbness: Plus or minus 1/16 inch, measured at jambs on a perpendicular line from head to floor.

C. Drill and tap doors and frames to receive nontemplated, mortised, and surface-mounted door hardware.

3.3 INSTALLATION

A. General: Install hollow metal work plumb, rigid, properly aligned, and securely fastened in place; comply with Drawings and manufacturer's written instructions.

B. Hollow Metal Frames: Install hollow metal frames of size and profile indicated. Comply with ANSI/SDI A250.11.

1. Set frames accurately in position, plumbed, aligned, and braced securely until permanent anchors are set. After wall construction is complete, remove temporary braces, leaving surfaces smooth and undamaged.

    a. Where frames are fabricated in sections because of shipping or handling limitations, field splice at approved locations by welding face joint continuously; grind, fill, dress, and make splice smooth, flush, and invisible on exposed faces.
    b. Install frames with removable glazing stops located on secure side of opening.
    c. Install door silencers in frames before grouting.
    d. Remove temporary braces necessary for installation only after frames have been properly set and secured.
    e. Check plumbness, squareness, and twist of frames as walls are constructed. Shim as necessary to comply with installation tolerances.
    f. Field apply bituminous coating to backs of frames that are filled with grout containing antifreezing agents.

2. Floor Anchors: Provide floor anchors for each jamb and mullion that extends to floor, and secure with postinstalled expansion anchors.

    a. Floor anchors may be set with powder-actuated fasteners instead of postinstalled expansion anchors if so indicated and approved on Shop Drawings.

3. Metal-Stud Partitions: Solidly pack mineral-fiber insulation behind frames.
4. Masonry Walls: Coordinate installation of frames to allow for solidly filling space between frames and masonry with grout.
5. Installation Tolerances: Adjust hollow metal door frames for squareness, alignment, twist, and plumb to the following tolerances:

    a. Squareness: Plus or minus 1/16 inch, measured at door rabbet on a line 90 degrees from jamb perpendicular to frame head.
    b. Alignment: Plus or minus 1/16 inch, measured at jambs on a horizontal line parallel to plane of wall.
    c. Twist: Plus or minus 1/16 inch, measured at opposite face corners of jambs on parallel lines, and perpendicular to plane of wall.
    d. Plumbness: Plus or minus 1/16 inch, measured at jambs at floor.

C. Hollow Metal Doors: Fit hollow metal doors accurately in frames, within clearances specified below. Shim as necessary.

1. Non-Fire-Rated Standard Steel Doors:

    a. Jambs and Head: 1/8 inch plus or minus 1/16 inch.
    b. Between Edges of Pairs of Doors: 1/8 inch plus or minus 1/16 inch.
    c. Between Bottom of Door and Top of Threshold: Maximum 3/8 inch.
    d. Between Bottom of Door and Top of Finish Floor (No Threshold): Maximum 3/4 inch.

D. Glazing: Comply with installation requirements in Division 08 Section "Glazing" and with hollow metal manufacturer's written instructions.

1. Secure stops with countersunk flat- or oval-head machine screws spaced uniformly not more than 9 inches o.c. and not more than 2 inches o.c. from each corner.

3.4 ADJUSTING AND CLEANING

A. Final Adjustments: Check and readjust operating hardware items immediately before final inspection. Leave work in complete and proper operating condition. Remove and replace defective work, including hollow metal work that is warped, bowed, or otherwise unacceptable.

B. Remove grout and other bonding material from hollow metal work immediately after installation.

C. Prime-Coat Touchup: Immediately after erection, sand smooth rusted or damaged areas of prime coat and apply touchup of compatible air-drying, rust-inhibitive primer.

D. Metallic-Coated Surfaces: Clean abraded areas and repair with galvanizing repair paint according to manufacturer's written instructions.

**END OF SECTION 081113**

**SECTION 081416 - FLUSH WOOD DOORS**

PART 1 - GENERAL

1.1 RELATED DOCUMENTS

A. Drawings and general provisions of the Contract, including General and Supplementary Conditions and Division 01 Specification Sections, apply to this Section.

1.2 SUMMARY

A. Section Includes:

1. Solid-core bi-fold doors.

B. Related Sections:

1. Division 06 Section "Interior Architectural Woodwork" .
2. Division 08 Section "Bifiold Door Hardware".
3. Division 09 Sections "Interior Painting" for field finishing doors.

1.3 SUBMITTALS

A. Product Data: For each type of door indicated. Include details of core and edge constructionand trim for openings.

B. Shop Drawings: Indicate location, size, and hand of each door; elevation of each kind of door; construction details not covered in Product Data; location and extent of hardware blocking; and other pertinent data.

1. Indicate dimensions and locations of mortises and holes for hardware.
2. Indicate dimensions and locations of cutouts.

1.4 QUALITY ASSURANCE

A. Source Limitations: Obtain flush wood doors from single manufacturer.

B. Quality Standard: In addition to requirements specified, comply with AWI's "Architectural Woodwork Quality Standards Illustrated."

1. Provide AWI Quality Certification Labels or an AWI letter of licensing for Project indicating that doors comply with requirements of grades specified.

1.5 DELIVERY, STORAGE, AND HANDLING

A. Comply with requirements of referenced standard and manufacturer's written instructions.

B. Package doors individually in cardboard cartons and wrap bundles of doors in plastic sheeting.

C. Mark each door on top and bottom rail with opening number used on Shop Drawings.

1.6 PROJECT CONDITIONS

A. Environmental Limitations: Do not deliver or install doors until spaces are enclosed and weathertight, wet work in spaces is complete and dry, and HVAC system is operating and maintaining ambient temperature and humidity conditions at occupancy levels during the remainder of the construction period.

1.7 WARRANTY

A. Special Warranty: Manufacturer's standard form in which manufacturer agrees to repair or replace doors that fail in materials or workmanship within specified warranty period.

1. Failures include, but are not limited to, the following:

a. Warping (bow, cup, or twist) more than 1/4 inch in a 42-by-84-inch section.
b. Telegraphing of core construction in face veneers exceeding 0.01 inch in a 3-inch span.

2. Warranty shall also include installation and finishing that may be required due to repair or replacement of defective doors.
3. Warranty Period for Solid-Core Interior Doors: Life of installation.

PART 2 - PRODUCTS

2.1 MANUFACTURERS

A. Manufacturers: Subject to compliance with requirements, available manufacturers offering products that may be incorporated into the Work include, but are not limited to, the following:

1. Eggers Industries.
2. Lambton Doors.
3. VT Industries Inc.

2.2 DOOR CONSTRUCTION, GENERAL

A. Structural-Composite-Lumber-Core Doors:

1. Structural Composite Lumber: WDMA I.S.10.

a. Screw Withdrawal, Face: 700 lbf.
b. Screw Withdrawal, Edge: 400 lbf.

2. Edge Construction: At hinge stiles, provide laminated-edge construction with improved screw-holding capability and split resistance. Comply with specified requirements for exposed edges.

2.3 DOORS FOR OPAQUE FINISH

A. Interior Solid-Core Doors:

1. Grade: Custom.
2. Faces: Any closed-grain hardwood of mill option.

   Hardboard Faces: AHA A135.4, Class 1 tempered or Class 2 standard.

3. Exposed Vertical and Top Edges: Any closed-grain hardwood.
4. Core: Either glued wood stave or structural composite lumber.
5. Construction: Five plies, either bonded or nonbonded construction.
6. WDMA I.S.1-A Performance Grade: Heavy Duty.

2.4 FABRICATION

A. Factory fit doors to suit frame-opening sizes indicated. Comply with clearance requirements of referenced quality standard for fitting unless otherwise indicated.

1. Comply with requirements in NFPA 80 for fire-rated doors.

PART 3 - EXECUTION

3.1 EXAMINATION

A. Examine doors and installed door frames before hanging doors.

1. Verify that frames comply with indicated requirements for type, size, location, and swing characteristics and have been installed with level heads and plumb jambs.
2. Reject doors with defects.

B. Proceed with installation only after unsatisfactory conditions have been corrected.

3.2 INSTALLATION

A. Hardware: For installation, see Division 08 Section "Door Hardware."

B. Installation Instructions: Install doors to comply with manufacturer's written instructions and the referenced quality standard, and as indicated.

C. Job-Fitted Doors: Align and fit doors in frames with uniform clearances and bevels as indicated below; do not trim stiles and rails in excess of limits set by manufacturer or permitted for fire-rated doors. Machine doors for hardware. Seal edges of doors, edges of cutouts, and mortises after fitting and machining.

1. Clearances: Provide 1/8 inch at heads, jambs, and between pairs of doors. Provide 1/8 inch from bottom of door to top of decorative floor finish or covering unless otherwise indicated. Where threshold is shown or scheduled, provide 1/4 inch from bottom of door to top of threshold unless otherwise indicated.
2. Bevel non-fire-rated doors 1/8 inch in 2 inches at lock and hinge edges.

D. Factory-Fitted Doors: Align in frames for uniform clearance at each edge.

3.3 ADJUSTING

A. Operation: Rehang or replace doors that do not swing or operate freely.

B. Finished Doors: Replace doors that are damaged or that do not comply with requirements. Doors may be repaired or refinished if work complies with requirements and shows no evidence of repair or refinishing.

**END OF SECTION 081416**

# SECTION 083113 - ACCESS DOORS AND FRAMES

## PART 1 - GENERAL

### 1.1 RELATED DOCUMENTS

A. Drawings and general provisions of the Contract, including General and Supplementary Conditions and Division 01 Specification Sections, apply to this Section.

### 1.2 SUMMARY

A. This Section includes the following:

1. Access doors and frames for walls and ceilings.

B. Related Sections include the following:

1. Division 04 Section "Unit Masonry" for anchoring and grouting access door frames set in masonry construction.
2. Division 09 Section "Gypsum Wallboard Systems".

### 1.3 SUBMITTALS

A. Product Data: For each type of access door and frame indicated. Include construction details, materials, individual components and profiles, and finishes.

### 1.4 QUALITY ASSURANCE

A. Source Limitations: Obtain **each type of** access door(s) and frame(s) through one source from a single manufacturer.

B. Size Variations: Obtain Architect's acceptance of manufacturer's standard-size units, which may vary slightly from sizes indicated.

### 1.5 COORDINATION

A. Verification: Determine specific locations and sizes for access doors needed to gain access to concealed plumbing, mechanical, or other concealed work, and indicate in the schedule specified in "Submittals" Article.

PART 2 - PRODUCTS

2.1 STEEL MATERIALS

A. Steel Sheet: **Uncoated electrolytic zinc-coated, ASTM A 591 with** cold-rolled steel sheet substrate complying with ASTM A 1008/A 1008M, Commercial Steel (CS), exposed.

B. Steel Finishes: Comply with NAAMM's "Metal Finishes Manual for Architectural and Metal Products" for recommendations for applying and designating finishes.

1. Surface Preparation for Steel Sheet: Clean surfaces to comply with SSPC-SP 1, "Solvent Cleaning," to remove dirt, oil, grease, or other contaminants that could impair paint bond. Remove mill scale and rust, if present, from uncoated steel, complying with SSPC-SP 5/NACE No. 1, "White Metal Blast Cleaning," or SSPC-SP 8, "Pickling."
2. Factory-Primed Finish: Apply shop primer immediately after cleaning and pretreating.
3. Baked-Enamel Finish: Immediately after cleaning and pretreating, apply manufacturer's standard two-coat, baked-enamel finish consisting of prime coat and thermosetting topcoat. Comply with paint manufacturer's written instructions for applying and baking to achieve a minimum dry film thickness of 2 mils.

2.2 ACCESS DOORS AND FRAMES FOR WALLS AND CEILINGS

A. Available Manufacturers: Subject to compliance with requirements, manufacturers offering products that may be incorporated into the Work include, but are not limited to, the following:

1. Karp Associates, Inc.
2. Larsen's Manufacturing Company.
3. Milcor Inc.
4. Nystrom, Inc.

B. Flush Access Doors and Frames with Exposed Trim: Fabricated from **steel** sheet.

1. Locations: **Wall and ceiling** surfaces.
2. Door: Minimum **0.060-inch-** thick sheet metal, set flush with exposed face flange of frame.
3. Frame: Minimum **0.060-inch** thick sheet metal with **1-1/4-inch-** wide, surface-mounted trim.
4. Hinges: **Continuous piano**.
5. Latch: **Cam latch** operated by **screwdriver**.
6. Size: 16” X 16” unless otherwise noted.

2.3 FABRICATION

A. General: Provide access door and frame assemblies manufactured as integral units ready for installation.

B. Metal Surfaces: For metal surfaces exposed to view in the completed Work, provide materials with smooth, flat surfaces without blemishes. Do not use materials with exposed pitting, seam marks, roller marks, rolled trade names, or roughness.

C. Doors and Frames: Grind exposed welds smooth and flush with adjacent surfaces. Furnish attachment devices and fasteners of type required to secure access panels to types of supports indicated.

1. Exposed Flanges: **Nominal 1 to 1-1/2 inches wide around perimeter of frame**.
2. Provide mounting holes in frames for attachment of units to metal or wood framing.

3. Provide mounting holes in frame for attachment of masonry anchors.

D. Latching Mechanisms: Furnish number required to hold doors in flush, smooth plane when closed.

PART 3 - EXECUTION

3.1 INSTALLATION

A. Comply with manufacturer's written instructions for installing access doors and frames.

B. Set frames accurately in position and attach securely to supports with plane of face panels aligned with adjacent finish surfaces.

C. Install doors flush with adjacent finish surfaces or recessed to receive finish material.

3.2 ADJUSTING AND CLEANING

A. Adjust doors and hardware after installation for proper operation.

B. Remove and replace doors and frames that are warped, bowed, or otherwise damaged.

**END OF SECTION 083113**

**SECTION 084112 – INTERIOR ALUMINUM-FRAMED ENTRANCES**

PART 1 - GENERAL

1.1 RELATED DOCUMENTS

A. Drawings and general provisions of the Contract, including General and Supplementary Conditions and Division 01 Specification Sections, apply to this Section.

1.2 SUMMARY

A. Section Includes:

1. Interior manual-swing doors and door-frame units.

B. Related Sections:

1. Division 04 “Masonry”.
2. Division 07 “Sealants”.
3. Division 08 “Exterior Aluminum Frames”.
4. Division 08 “Aluminum Windows”.
5. Division 08 “Glazing”

1.3 DEFINITIONS

A. ADA/ABA Accessibility Guidelines: U.S. Architectural & Transportation Barriers Compliance Board's "Americans with Disability Act (ADA) and Architectural Barriers Act (ABA) Accessibility Guidelines for Buildings and Facilities."

1.4 PERFORMANCE REQUIREMENTS

A. General Performance: Aluminum-framed systems shall withstand the effects of the following performance requirements without exceeding performance criteria or failure due to defective manufacture, fabrication, installation, or other defects in construction:

1. Movements of supporting structure indicated on Drawings including, but not limited to, story drift and deflection from uniformly distributed and concentrated live loads.
2. Dimensional tolerances of building frame and other adjacent construction.
3. Failure includes the following:

a. Deflection exceeding specified limits.
b. Thermal stresses transferring to building structure.
c. Framing members transferring stresses, including those caused by thermal and structural movements to glazing.
d. Noise or vibration created by wind and by thermal and structural movements.
e. Loosening or weakening of fasteners, attachments, and other components.
f. Sealant failure.
g. Failure of operating units.

B. Delegated Design: Design aluminum-framed systems, including comprehensive engineering analysis by a qualified professional engineer, using performance requirements and design criteria indicated.

C. Structural Loads:

1. Wind Loads:

a. Basic Wind Speed: 90 mph .
b. Importance Factor: I.
c. Exposure Category: B.

D. Deflection of Framing Members:

1. Deflection Normal to Wall Plane: Limited to edge of glass in a direction perpendicular to glass plane shall not exceed L/175 of the glass edge length for each individual glazing lite or an amount that restricts edge deflection of individual glazing lites to 3/4 inch, whichever is less.
2. Deflection Parallel to Glazing Plane: Limited to L/360 of clear span or 1/8 inch, whichever is smaller.

E. Structural-Test Performance: Provide aluminum-framed systems tested according to ASTM E 330 as follows:

1. When tested at positive and negative wind-load design pressures, systems do not evidence deflection exceeding specified limits.
2. Test Durations: As required by design wind velocity, but not fewer than 10 seconds.

F. Air Infiltration: Provide aluminum-framed systems with maximum air leakage through fixed glazing and framing areas of 0.06 cfm/sq. ft. of fixed wall area when tested according to ASTM E 283 at a minimum static-air-pressure difference of 1.57 lbf/sq. ft. .

G. Water Penetration under Static Pressure: Provide aluminum-framed systems that do not evidence water penetration through fixed glazing and framing areas when tested according to ASTM E 331 at a minimum static-air-pressure difference of 20 percent of positive wind-load design pressure, but not less than 6.24 lbf/sq. ft. .

H. Water Penetration under Dynamic Pressure: Provide aluminum-framed systems that do not evidence water leakage through fixed glazing and framing areas when tested according to AAMA 501.1 under dynamic pressure equal to 20 percent of positive wind-load design pressure, but not less than 6.24 lbf/sq. ft.

1. Maximum Water Leakage: No uncontrolled water penetrating aluminum-framed systems or water appearing on systems' normally exposed interior surfaces from sources other than condensation. Water leakage does not include water controlled by flashing and gutters that is drained to exterior and water that cannot damage adjacent materials or finishes.

I. Thermal Movements: Provide aluminum-framed systems that allow for thermal movements resulting from the following maximum change (range) in ambient and surface temperatures. Base engineering calculation on surface temperatures of materials due to both solar heat gain and nighttime-sky heat loss.

1. Temperature Change (Range): 120 deg F, ambient; 180 deg F, material surfaces.
2. Test Performance: No buckling; stress on glass; sealant failure; excess stress on framing, anchors, and fasteners; or reduction of performance when tested according to AAMA 501.5.

a. High Exterior Ambient-Air Temperature: That which produces an exterior metal-surface temperature of 180 deg F.

b. Low Exterior Ambient-Air Temperature: 0 deg F.

3. Interior Ambient-Air Temperature: 75 deg F .

J. Condensation Resistance: Provide aluminum-framed systems with fixed glazing and framing areas having condensation-resistance factor (CRF) of not less than 45 when tested according to AAMA 1503.

K. Thermal Conductance: Provide aluminum-framed systems with fixed glazing and framing areas having an average U-factor of not more than 0.57 Btu/sq. ft. x h x deg F when tested according to AAMA 1503.

1.5 SUBMITTALS

A. Product Data: For each type of product indicated. Include construction details, material descriptions, dimensions of individual components and profiles, and finishes for aluminum-framed systems.

B. Shop Drawings: For aluminum-framed systems. Include plans, elevations, sections, details, and attachments to other work.

1. Include details of provisions for system expansion and contraction and for drainage of moisture in the system to the exterior.

C. Product Test Reports: Based on evaluation of comprehensive tests performed by a qualified testing agency, for aluminum-framed systems, indicating compliance with performance requirements.

1.6 QUALITY ASSURANCE

A. Installer Qualifications: Manufacturer's authorized representative who is trained and approved for installation of units required for this Project.

B. Testing Agency Qualifications: Qualified according to ASTM E 699 for testing indicated.

C. Engineering Responsibility: Prepare data for aluminum-framed systems, including Shop Drawings, based on testing and engineering analysis of manufacturer's standard units in systems similar to those indicated for this Project.

D. Product Options: Information on Drawings and in Specifications establishes requirements for systems' aesthetic effects and performance characteristics. Aesthetic effects are indicated by dimensions, arrangements, alignment, and profiles of components and assemblies as they relate to sightlines, to one another, and to adjoining construction. Performance characteristics are indicated by criteria subject to verification by one or more methods including preconstruction testing, field testing, and in-service performance.

1. Do not revise intended aesthetic effects, as judged solely by Architect, except with Architect's approval. If revisions are proposed, submit comprehensive explanatory data to Architect for review.

E. Source Limitations for Aluminum-Framed Systems: Obtain from single source from single manufacturer.

F. Welding Qualifications: Qualify procedures and personnel according to AWS D1.2, "Structural Welding Code - Aluminum."

1.7 PROJECT CONDITIONS

A. Field Measurements: Verify actual locations of structural supports for aluminum-framed systems by field measurements before fabrication and indicate measurements on Shop Drawings.

1.8 MAINTENANCE SERVICE

A. Entrance Door Hardware:

1. Maintenance Tools and Instructions: Furnish a complete set of specialized tools and maintenance instructions as needed for Owner's continued adjustment, maintenance, and removal and replacement of entrance door hardware.

PART 2 - PRODUCTS

2.1 MANUFACTURERS

A. Manufacturers: Subject to compliance with requirements, available manufacturers offering products that may be incorporated into the Work include, but are not limited to, the following:

1. Kawneer North America; an Alcoa company.
2. EFCO Corporation.
3. Vistawall Architectural Products

2.2 MATERIALS

A. Aluminum: Alloy and temper recommended by manufacturer for type of use and finish indicated.

1. Sheet and Plate: ASTM B 209.
2. Extruded Bars, Rods, Profiles, and Tubes: ASTM B 221.
3. Extruded Structural Pipe and Tubes: ASTM B 429.
4. Structural Profiles: ASTM B 308/B 308M.
5. Welding Rods and Bare Electrodes: AWS A5.10/A5.10M.

B. Steel Reinforcement: Manufacturer's standard zinc-rich, corrosion-resistant primer, complying with SSPC-PS Guide No. 12.00; applied immediately after surface preparation and pretreatment. Select surface preparation methods according to recommendations in SSPC-SP COM and prepare surfaces according to applicable SSPC standard.

1. Structural Shapes, Plates, and Bars: ASTM A 36/A 36M.
2. Cold-Rolled Sheet and Strip: ASTM A 1008/A 1008M.
3. Hot-Rolled Sheet and Strip: ASTM A 1011/A 1011M.

2.3 FRAMING SYSTEMS

A. Framing Members: Manufacturer's standard extruded-aluminum framing members of thickness required and reinforced as required to support imposed loads.

1. Construction: Standard.
2. Glazing System: Retained mechanically with gaskets on four sides.

3. Glazing Plane: Center.

B. Brackets and Reinforcements: Manufacturer's standard high-strength aluminum with nonstaining, nonferrous shims for aligning system components.

C. Fasteners and Accessories: Manufacturer's standard corrosion-resistant, nonstaining, nonbleeding fasteners and accessories compatible with adjacent materials.

1. Use self-locking devices where fasteners are subject to loosening or turning out from thermal and structural movements, wind loads, or vibration.
2. Reinforce members as required to receive fastener threads.
3. Use exposed fasteners with countersunk Phillips screw heads, finished to match framing system.

D. Concrete and Masonry Inserts: Hot-dip galvanized cast-iron, malleable-iron, or steel inserts, complying with ASTM A 123/A 123M or ASTM A 153/A 153M.

E. Concealed Flashing: Manufacturer's standard corrosion-resistant, nonstaining, nonbleeding flashing compatible with adjacent materials.

F. Framing System Gaskets and Sealants: Manufacturer's standard, recommended by manufacturer for joint type.

1. Provide sealants for use inside of the weatherproofing system that have a VOC content of 250 g/L or less when calculated according to 40 CFR 59, Subpart D (EPA Method 24).

## 2.4 GLAZING SYSTEMS

A. Glazing: As specified in Division 08 Section "Glazing."

B. Glazing Gaskets: Manufacturer's standard compression types; replaceable, molded or extruded, of profile and hardness required to maintain watertight seal.

C. Spacers and Setting Blocks: Manufacturer's standard elastomeric type.

## 2.5 ENTRANCE DOOR SYSTEMS

A. Entrance Doors: Manufacturer's standard glazed entrance doors for manual-swing operation.

1. Door Construction: 1-3/4-inch overall thickness, with minimum 0.125-inch thick, extruded-aluminum tubular rail and stile members. Mechanically fasten corners with reinforcing brackets that are deeply penetrated and fillet welded or that incorporate concealed tie rods.

2. Door Design: Wide stile; 5-inch nominal width.
3. Glazing Stops and Gaskets: snap-on, extruded-aluminum stops and preformed gaskets.

a. Provide non-removable glazing stops on outside of door.

B. Entrance Door Hardware: Coordinate with Division 08 Section "Door Hardware."

## 2.6 ACCESSORY MATERIALS

A. Joint Sealants: For installation at perimeter of aluminum-framed systems, as specified in Division 07 Section "Joint Sealants."

1. Provide sealants for use inside of the weatherproofing system that have a VOC content of 250 g/L or less when calculated according to 40 CFR 59, Subpart D (EPA Method 24).

B. Bituminous Paint: Cold-applied, asphalt-mastic paint complying with SSPC-Paint 12 requirements except containing no asbestos; formulated for 30-mil thickness per coat.

## 2.7 FABRICATION

A. Form or extrude aluminum shapes before finishing.

B. Weld in concealed locations to greatest extent possible to minimize distortion or discoloration of finish. Remove weld spatter and welding oxides from exposed surfaces by descaling or grinding.

C. Framing Members, General: Fabricate components that, when assembled, have the following characteristics:

1. Profiles that are sharp, straight, and free of defects or deformations.
2. Accurately fitted joints with ends coped or mitered.
3. Means to drain water passing joints, condensation within framing members, and moisture migrating within the system to exterior.
4. Physical and thermal isolation of glazing from framing members.
5. Accommodations for thermal and mechanical movements of glazing and framing to maintain required glazing edge clearances.
6. Provisions for field replacement of glazing from interior for vision glass and exterior for spandrel glazing or metal panels.
7. Fasteners, anchors, and connection devices that are concealed from view to greatest extent possible.

D. Mechanically Glazed Framing Members: Fabricate for flush glazing without projecting stops.

E. Storefront Framing: Fabricate components for assembly using screw-spline system.

F. Entrance Door Frames: Reinforce as required to support loads imposed by door operation and for installing entrance door hardware.

G. Entrance Doors: Reinforce doors as required for installing entrance door hardware.

H. Entrance Door Hardware Installation: Factory install entrance door hardware to the greatest extent possible. Cut, drill, and tap for factory-installed entrance door hardware before applying finishes.

I. After fabrication, clearly mark components to identify their locations in Project according to Shop Drawings.

## 2.8 ALUMINUM FINISHES

A. Color Anodic Finish: AAMA 611, AA-M12C22A42, Class I, 0.018 mm or thicker.
1. Color: Medium Bronze.

## PART 3 - EXECUTION

### 3.1 EXAMINATION

A. Examine areas and conditions, with Installer present, for compliance with requirements for installation tolerances and other conditions affecting performance of the Work.

B. Proceed with installation only after unsatisfactory conditions have been corrected.

### 3.2 INSTALLATION

A. General:

1. Comply with manufacturer's written instructions.
2. Do not install damaged components.
3. Fit joints to produce hairline joints free of burrs and distortion.
4. Rigidly secure nonmovement joints.
5. Install anchors with separators and isolators to prevent metal corrosion and electrolytic deterioration.
6. Seal joints watertight unless otherwise indicated.

B. Metal Protection:

1. Where aluminum will contact dissimilar metals, protect against galvanic action by painting contact surfaces with primer or applying sealant or tape, or by installing nonconductive spacers as recommended by manufacturer for this purpose.
2. Where aluminum will contact concrete or masonry, protect against corrosion by painting contact surfaces with bituminous paint.

C. Install components to drain water passing joints, condensation occurring within framing members, and moisture migrating within the system to exterior.

D. Set continuous sill members and flashing in full sealant bed as specified in Division 07 Section "Joint Sealants" to produce weathertight installation.

E. Install components plumb and true in alignment with established lines and grades, and without warp or rack.

F. Install glazing as specified in Division 08 Section "Glazing."

G. Entrance Doors: Install doors to produce smooth operation and tight fit at contact points.

1. Field-Installed Entrance Door Hardware: Install surface-mounted entrance door hardware according to entrance door hardware manufacturers' written instructions using concealed fasteners to greatest extent possible.

H. Install perimeter joint sealants as specified in Division 07 Section "Joint Sealants" to produce weathertight installation.

3.3 ERECTION TOLERANCES

A. Install aluminum-framed systems to comply with the following maximum erection tolerances:

1. Location and Plane: Limit variation from true location and plane to 1/8 inch in 12 feet over total length.
2. Alignment:

a. Where surfaces abut in line, limit offset from true alignment to 1/16 inch.
b. Where surfaces meet at corners, limit offset from true alignment to 1/32 inch.

B. Diagonal Measurements: Limit difference between diagonal measurements to 1/8 inch.

3.4 ADJUSTING

A. Adjust operating entrance door hardware to function smoothly as recommended by manufacturer.

**END OF SECTION 084113**

**SECTION 084413 EXTERIOR ALUMINUM ENTRANCES**

PART 1 – GENERAL

1.1 RELATED DOCUMENTS

A. Drawings and general provisions of the Contract, including General and Supplementary Conditions and Division 1 Specifications Sections, apply to this section.

1.2 SUMMARY

A. This section includes the following:

1. Exterior entrance systems
2. Door Hardware and Components

B. Related Sections:

1. Division 7 Section “Joint Sealants” for joint sealants installed as part of aluminum entrance and storefront systems.
2. Division 8 Section “Finish Hardware”
7. Division 8 Section “Glass and Glazing”
8. Division 8 Section “Aluminum Windows”

1.3 REFERENCES

A. ASTM International
1. ASTM F 1642: Standard Method for Glazing and Glazing Systems Subjected to Airblast Loadings

B. Unified Facilities Criteria (UFC)
1. UFC 1-200-01: General Building Requirements
2. UFC 3-310-01: Design: Structural Load Data
3. UFC 4-010-01: DoD Minimum Antiterrorism Standards for Buildings

1.4 SYSTEM DESCRIPTION

A. General: Aluminum Entrance Systems, including glass and glazing, shims and anchors, accessories and perimeter sealing of entrance framing.

1. Aluminum Entrances include: Kawneer Company, Inc.

a. 500 Swing Door; Wide stile, 5" vertical face dimension, 2” depth.

B. Swing Door Performance Requirements:

1. Wind loads: Provide immediate door framing for swing doors, including anchorage, capable of withstanding wind-load design pressures as determined per UFC 3-310-01 Design - Structural Load Data
2. Air Infiltration: For single acting offset pivot or butt hung entrances in the closed and locked position, the test specimen shall be tested in accordance with ASTM E 283 at a pressure differential of 6.24 PSF for single doors and 1.567 PSF for pairs of doors. A single 3'0" x 7'0" entrance door and frame shall not exceed .50 cfm per linear foot of perimeter crack. A pair of 6'0" x 7'0" entrance doors and frame shall not exceed 1.0 cfm per linear foot of perimeter crack.

3. Structural: Corner strength shall be tested per Kawneer's dual moment load test procedure and certified by an independent testing laboratory to ensure weld compliance and corner integrity [Testing procedure and certified test results available upon request].
4. Glazing and Glazing Systems Subjected to Airblast Loadings: The test specimen shall be tested in accordance with ASTM F 1642. The test specimen shall receive a minimum "Low Hazard" rating per ASTM F1642-04, a "Performance Condition 3b" per GSA, and a "Low Level of Protection" per UFC 4-010-01.
5. Blast Mitigation: Provide system designed to meet or exceed the following requirements of the UFC 4-010-01 (8 October, 2003), "DoD Minimum Antiterrorism Standard for Buildings."
   a. Section B-3.1 Standard 10 Windows, Skylights, and Glazed Doors.
      To minimize hazards from flying glass fragments, apply the provisions for glazing and window, skylight, and glazed door frames below for all new and existing inhabited buildings covered by these standards. Glazing and frames must work as a system to ensure that their hazard mitigation is effective. These provisions apply even if the minimum standoff distances are met. The specific requirements below, provided conventional standoff distances are met, will result in windows, skylights, and glazed doors that comply with this standard for windows provided their visual glazing openings do not exceed 3 square meters (32 square feet).
   b. Section B-3.1.1 Glazing
      Use minimum of 6-mm (1/4-in) nominal laminated glass for all exterior windows, skylights, and glazed doors. The 6-mm (1/4-in) laminated glass consists of two nominal 3-mm (1/8-in) glass panes bonded together with a minimum of a 0.75-mm (0.030-inch) polyvinyl-butyal (PVB) interlayer. For insulated glass units, use 6-mm (1/4-inch) laminated glass inner pane as a minimum.
   c. Section B-3.1.2.1 Frame Member Design
      Steel members may be designed using ultimate yield stresses and aluminum members may be designed based on a 0.2% offset yield strength. Equivalent static design loads for the window, skylight, and door members shall be 7 kilopascals (1 lb per square in) applied to the surface of the glazing and frame. Deformations shall not exceed 1/60 of the unsupported member lengths.
   d. Section B-3.1.2.2 Glazing Frame Bite
      The glazing shall have a minimum frame bite of 9.5-mm (3/8-in) for structurally glazed systems and 25-mm (1-in) for window systems that are not structurally glazed.
   e. Section B-3.1.2.2 Connection Design
      Equivalent static design loads for connections of the window, skylight, or door frame to the surrounding walls or roof, hardware and associated connections, and glazing stop connections shall be 75 kilopascals (10.8 lbs per square inch) for glazing panels with a vision area less than or equal to 1.0 square meters (10.8 square feet) and 30 kilopascals (4.4 lbs per square inch) for glazing panels with a vision area greater than 1.0 square meters (10.8 square feet) but less than or equal to 3.0 square meters (32 square feet). Loads shall be applied to the surface of the glazing and frame. Connections and hardware may be designed based on ultimate strength for steel and 0.2% offset yield strength for aluminum.
   f. Section B-3.3 Standard 12 Exterior Doors
      For all new and existing buildings covered by these standards, ensure that all exterior doors into inhabited areas open outwards. By doing so, the doors will seat into the door frames in response to an explosive blast, increasing the likelihood that the doors will not enter the buildings as hazardous debris. Alternatively, position doors such that they will not be propelled into rooms if they fail in response to a blast or provide other means to ensure they do not become hazards to building occupants.

## 1.5 SUBMITTALS

A. Product Data: For each product specified. include details of construction relative to materials, dimensions of individual components, profiles, and finishes.

B. Shop Drawings: Show details of fabrication and installation, including plans, elevations, sections, and details of components, and attachments to other work. Include hardware schedule and indicate operating hardware types, quantities, and locations. Shop drawings are to be prepared by the manufacturer.

C. Samples: Provide samples of each type of product section and exposed finish required in manufacturer's standard sizes.

D. Test Reports: Submit certified test reports showing compliance with specified performance characteristics.

1.6 QUALITY ASSURANCE

A. Qualifications:

1. Installer Qualifications: Installer experienced (as determined by contractor) to perform work of this section who has specialized in the installation of work similar to that required for this project and who is acceptable to product manufacturer.
2. Manufacturer Qualifications: Manufacturer capable of providing field service representation during construction, approving acceptable installer and approving application method.

B. Pre-Installation Meetings: Conduct pre-installation meeting to verify project requirements, substrate conditions, manufacturer's installation instructions, and manufacturer's warranty requirements.

1.7 DELIVERY, STORAGE, HANDLING

A. Ordering: Comply with manufacturer's ordering instructions and lead-time requirements to avoid construction delays.

B. Packing, Shipping, Handling, and Unloading: Deliver materials in manufacturer's original, unopened, undamaged containers with identification labels intact.

C. Storage and Protection: Store materials protected from exposure to harmful weather conditions. Handle materials and components to avoid damage. Protect materials against damage from elements, construction activities, and other hazards before, during and after installation.

1.8 WARRANTY

A. Project Warranty: Refer to "Conditions of the Contract" for project warranty conditions

B. Manufacturer's Product Warranty: Submit, for owner's acceptance, manufacturer's standard warranty.

1. Warranty Period: Two (2) years from Date of Substantial Completion of the project provided however that the Limited Warranty shall begin in no event later than six months from date of shipment by Kawneer Company, Inc. In addition, welded door corner construction shall be supported with a limited lifetime warranty for the life of the door under normal use.

PART 2 - PRODUCTS

2.1 MANUFACTURER

A. Basis-of-Design Product: The design for each product is based on the "Kawneer" product named. Subject to compliance with requirements, provide either the named product or a comparable product by one of the other manufacturers specified.

a. Kawneer Company, Inc. 500 Wide Stile.
b. EFCO Corporation.
c. Vistawall Architectural Products.

2.2 MATERIALS

A. Aluminum (Entrance Door and Components): Alloy and temper recommended by manufacturer for type of use and finish indicated, complying with the requirements of standards indicated below.

1. Extruded Material Standard: ASTM B 221, 6063-T5 and/or 6063-T6 alloy and temper.

B. Steel Reinforcement: Complying with ASTM A 36/ A 36M for structural shapes, plates and bars; ASTM A 611 for cold-rolled sheet and strip or ASTM A 570/ A 570M for hot-rolled sheet and strip.

C. Glazing Gaskets / Setting Blocks: Manufacturer's standard glazing system of black, resilient glazing gaskets, setting blocks, and shims or spacers, fabricated from an elastomer of type and in hardness recommended by system and gasket manufacturer to comply with system performance requirements.

D. Fasteners: Where exposed, shall be 300 Series, Stainless Steel.

E. Weather Stripping: Manufacturer's standard replaceable weather stripping as follows:

1. Meeting stiles on pairs of doors shall be equipped with an adjustable astragal utilizing wool pile with polymeric fin. 2. The door weathering on a single acting offset pivot or butt hung door and frame (single or pairs) shall be comprised of a thermoplastic elastomer weathering on a tubular shape with a semi-rigid polymeric backing.
2. Bottom Rail Sweep Strips shall be EPDM blade type gaskets in an aluminum extrusion.

2.3 HARDWARE

A. General: Provide heavy-duty hardware units indicated in sizes, number, and type recommended by manufacturer for entrances indicated. Finish exposed parts to match door finish, unless otherwise indicated.

B. Pivots and Hinges:

1. Butt Hinges: ANSI/BHMA A156.4, Grade 1. Non-removable Pin. Provide manufacturer’s standard top, bottom and intermediate hinges (as required) at each door leaf.

C. Closers, General: Comply with manufacturer's recommendations for closer size, depending on door size, exposure to weather, anticipated frequency of use and accessibility requirements.

1. Overhead Surface Closers:
   a. LCN 4040 Super Smoothee (meets ADA interior opening force requirements)

D. Locking Hardware & Exit Devices

1. Exit Devices
   a. Standard: Kawneer Standard Touchbar Concealed Rod Device with “CO-9” Pull

E. Pull Handles:

1. Standard: Kawneer Architects Classic “CO-9” Pull
2. Optional: Kawneer Architects Classic “CO-12” Pull

F. Thresholds: At exterior doors, provide manufacturer's standard threshold with cutouts coordinated for operating hardware, with anchors and jamb clips, and not more than 1/2-inch- (12.7-mm-) high, with beveled edges providing a floor level change with a slope of not more than 1:2, and in the following material

1. Material: Aluminum, mill finish.

2.4 ACCESSORIES

A. Spacers, Setting Blocks, Gaskets, and Bond Breakers: Manufacturer's standard permanent, nonmigrating types in hardness recommended by manufacturer, compatible with sealants, and suitable for system performance requirements.

B. Framing system gaskets, sealants, and joint fillers as recommended by manufacturer for joint type.

C. Sealants and joint fillers for joints at perimeter of entrance system as specified in Division 7 Section "Joint Sealants".

D. Perimeter Anchors: When steel anchors are used, provide insulation between steel material and aluminum material to prevent galvanic action.

2.5 RELATED MATERIALS

A. Sealants: Refer to Division 7 Section “Joint Sealants”

B. Glass: Refer to Division 8 Section “Glass and Glazing”.

C. Insulation: Refer to Division 7 Section “Building Insulation”.

D. Bituminous Paint: Cold-applied asphalt-mastic paint complying with SSPC-Paint 12 requirements, except containing no asbestos, formulated for 30-mil (0.762-mm) thickness per coat.

2.6 COMPONENTS

A. Doors: Provide manufacturer's 2” thick glazed doors with nominal 0.187-inch thick, extruded tubular rail and stile members. Mechanically fasten corners with reinforcing brackets that are deep penetration and fillet welded.

1. Glazing Stops and Gaskets: Provide manufacturer's standard snap-on and screw applied extruded-aluminum glazing stops and preformed gaskets for glazed infill thickness specified.
2. Stile Design:

a. 500: 5” Vertical Stile, 5” Top Rail, 6-1/2” Bottom Rail, 2” thick thermally broken.

B. Brackets and Reinforcements: Provide manufacturer's standard brackets and reinforcements that are compatible with adjacent materials. Provide nonstaining, nonferrous shims for aligning system components.

C. Provide manufacturer’s standard adjustable glass jacks for door alignment.

2.7 FABRICATION

A. General: Fabricate components per manufacturer's installation instructions. When assembled, components will have accurately fitted joints to produce hairline joints.

1. Door corner construction shall consist of mechanical clip fastening, SIGMA deep penetration plug welds and 1-1/8" long fillet welds inside and outside of all four corners.
2. Prepare components with internal reinforcement to receive door hardware.
3. Factory assemble door and frame units and factory install hardware to greatest extent possible.
4. Fabrication Tolerances: Fabricate aluminum entrances in accordance with entrance manufacturer's prescribed tolerances.

2.8 FINISHES

A. All finishes shall be factory applied as recommended by the entrance manufacturer.

B. Factory Finishes:

1. Kawneer Permanodic® AA-M12C22A44, AAMA 611, Architectural Class I Anodic Coating Color: #28 Medium Bronze .

2.9 SOURCE QUALITY CONTROL

A. Single Source Quality: Provide aluminum entrances specified herein from a single source.

1. Building Enclosure System: When aluminum entrances are part of a building enclosure system, including curtain walls, entrance hardware, windows, storefront systems, sliding glass doors, slope glazing, and related products, provide building enclosure system products from a single source manufacturer.

PART 3 - EXECUTION

3.1 EXAMINATION

A. Site Verification of Conditions: Verify substrate conditions (which have been previously installed under other sections) are acceptable for product installation in accordance with manufacturer's instructions. Verify openings are sized to receive entrance system and sill plate is level in accordance with manufacturer's acceptable tolerances. Do not proceed with installation until unsatisfactory conditions have been corrected.

1. Field Measurements: Verify actual measurements/openings by field measurements before fabrication; show recorded measurements on shop drawings. Coordinate field measurements, fabrication schedule with construction progress to avoid construction delays.

3.2 INSTALLATION

A. General: Install entrance units plumb, level, and true to line, without warp or rack of frames with manufacturer's prescribed tolerances. Provide support and anchor in place.

1. Dissimilar Materials: Provide separation of aluminum materials and other corrodible surfaces from sources of corrosion or electrolytic action contact points by complying with AAMA 101, Appendix, titled "Dissimilar Materials."
2. Weather Tight Construction: Install sill members and other members in a bed of sealant or with joint filler or gaskets, to provide weather tight construction. Coordinate installation with wall flashings and other components of construction.

a. Refer to Division 7 “Joint Treatments” (Sealants) for installation requirements.

B. Set thresholds in a full sealant bed and secure. Comply with requirements of Division 7 Section "Joint Sealants”.

C. Lubricate operating hardware and other moving parts according to hardware manufacturers' written instructions.

1. Install surface-mounted hardware according to manufacturer's written instructions using concealed fasteners to greatest extent possible.

D. Related Products Installation Requirements:

1. Insulation: Refer to Division 7 Building Insulation Section.
2. Sealants (Perimeter): Refer to Division 7 Joint Treatment (Sealants) Section.
3. Glass: Refer to Division 8 Section “Glazing”.

3.3 FIELD QUALITY CONTROL

A. Manufacturer’s Field Services: Upon Owner’s request, provide manufacturer’s field service consisting of product use recommendations and periodic site visit for inspection of product installation in accordance with manufacturer’s instructions.

3.4 ADJUSTING

A. Adjust doors and hardware to provide tight fit at contact points and weather stripping, smooth operation, and weather tight closure.

3.5 CLEANING

A. Remove temporary coverings and protection of adjacent work areas. Repair or replace damaged installed products. Clean installed products in accordance with manufacturer’s instructions prior to owner’s acceptance. Remove construction debris from project site and legally dispose of debris.

3.6 PROTECTION

A. Protect installed product’s finish surfaces from damage during construction. Protect aluminum entrances from damage from grinding and polishing compounds, plaster, lime, acid, cement, or other harmful contaminants. Remove and replace damaged aluminum entrances at no extra cost.

B. Protect adjacent work areas and finish surfaces from damage during product installation.

**END OF SECTION 084113**

**SECTION 085113 - ALUMINUM WINDOWS**

PART 1 - GENERAL

1.1 RELATED DOCUMENTS

A. Drawings and general provisions of the Contract, including General and Supplementary Conditions and Division 01 Specification Sections, apply to this Section.

1.2 SUMMARY

A. This Section includes fixed aluminum-framed windows for exterior locations.

B. Related Sections include the following:

1. Division 08 Section "Aluminum-Framed Entrances and Storefronts" for coordinating finish among aluminum fenestration units.
2. Division 08 Section "Security Glazing" for security glazing requirements for aluminum windows, including those specified to be factory- or site-glazed units.
3. Division 08 Section "Glazed Aluminum Curtain Walls" for incorporating aluminum windows into glazed curtain walls and for coordinating finish among aluminum fenestration units.

1.3 DEFINITIONS

A. Performance class designations according to AAMA/WDMA 101/I.S.2/NAFS:

1. AW: Architectural.
2. HC: Heavy Commercial.
3. C: Commercial.
4. LC: Light Commercial.
5. R: Residential.

B. Performance grade number according to AAMA/WDMA 101/I.S.2/NAFS:

1. Design pressure number in pounds force per square foot used to determine the structural test pressure and water test pressure.

C. ASTM International.

1. ASTM F 1642: Standard Method for Glazing and Glazing Systems Subjected to Airblast Loadings

D. Unified Facilities Criteria (UFC).
1. UFC 1-200-01: General Building Requirements.
2. UFC 3-310-01: Design: Structural Load Data.
3. UFC 4-010-01: DoD Minimum Antiterrorism Standards for Buildings.

1.4 PERFORMANCE REQUIREMENTS

A. System Performance Requirements:

1. Wind loads: Provide immediate door framing for swing doors, including anchorage, capable of withstanding wind-load design pressures as determined per UFC 3-310-01 Design - Structural Load Data.
2. Air Infiltration: The test specimen shall be tested in accordance with ASTM E 283. Air infiltration rate shall not exceed 0.06 cfm/ft$^2$ (0.3 l/s · m$^2$) at a static air pressure differential of 6.24 psf (300 Pa).
3. Water Resistance, (static): The test specimen shall be tested in accordance with ASTM E 331. There shall be no leakage at a static air pressure differential of 12 psf (575 Pa) as defined in AAMA 501.
4. Water Resistance, (dynamic): The test specimen shall be tested in accordance with AAMA 501.1. There shall be no leakage at an air pressure differential of 12 psf (575 Pa) as defined in AAMA 501.
5. Uniform Load: A static air design load of 40 psf (1915 Pa) shall be applied in the positive and negative direction in accordance with ASTM E 330. There shall be no deflection in excess of L/175 of the span of any framing member at design load. At structural test load equal to 1.5 times the specified design load, no glass breakage or permanent set in the framing members in excess of 0.2% of their clear spans shall occur.
6. Thermal Transmittance Test (U-value): When tested in accordance with AAMA Specification 1503, the conductive thermal transmittance (U-value) shall not be more than 0.66 BTU/hr/sf/°F
7. Condensation Resistance Test (CRF): When tested in accordance with AAMA Specification 1503, the condensation resistance factor (CRF) shall not be less than 66 for the frame and 60 for the glass.
8. Sound Transmission Loss: When tested to ASTM E90 and E413, the Sound Transmission Class (STC) shall not be less than 34.
9. Glazing and Glazing Systems Subjected to Airblast Loadings: The test specimen shall be tested in accordance with ASTM F 1642. The test specimen shall receive a minimum "Low Hazard" rating per ASTM F1642-04, a "Performance Condition 3b" per GSA and a "Low Level of Protection" per UFC 4-010-01.
10. Blast Mitigation: Provide system designed to meet or exceed the following requirements of the UFC 4-010-01 (8 October, 2003), "DoD Minimum Antiterrorism Standard for Buildings."
    a. Section B-3.1 Standard 10: Windows, Skylights, and Glazed Doors. To minimize hazards from flying glass fragments, apply the provisions for glazing and window, skylight, and glazed door frames below for all new and existing inhabited buildings covered by these standards. Glazing and frames must work as a system to ensure that their hazard mitigation is effective. These provisions apply even if the minimum standoff distances are met. The specific requirements below provided conventional standoff distances are met, will result in windows, skylights, and glazed doors that comply with this standard for windows provided their visual glazing openings do not exceed 3 square meters (32 square feet).
    b. Section B-3.1.1 Glazing: Use minimum of 6-mm (1/4-in) nominal laminated glass for all exterior windows, skylights, and glazed doors. The 6-mm (1/4-in) laminated glass consists of two nominal 3-mm (1/8-in) glass panes bonded together with a minimum of a 0.75-mm (0.030-inch) polyvinyl-butyl (PVB) interlayer. For insulated glass units, use 6-mm (1/4-inch) laminated glass inner pane as a minimum.
    c. Section B-3.1.2.1 Frame Member Design: Steel members may be designed using ultimate yield stresses and aluminum members may be designed based on a 0.2% offset yield strength. Equivalent static design loads for the window, skylight, and door members shall be 7 kilopascals (1 lb per square in) applied to the surface of the glazing and frame. Deformations shall not exceed 1/60 of the unsupported member lengths.
    d. Section B-3.1.2.2 Glazing Frame BiteThe glazing shall have a minimum frame bite of 9.5-mm (3/8-in) for structurally glazed systems and 25-mm (1-in) for window systems that are not structurally glazed.
    e. Section B-3.1.2.2 Connection Design: Equivalent static design loads for connections of the window, skylight, or door frame to the surrounding walls or roof, hardware and associated connections, and glazing stop connections shall be 75 kilopascals (10.8 lbs per square inch) for glazing panels with a vision area less than or equal to 1.0 square meters (10.8 square feet) and 30 kilopascals (4.4 lbs per square inch) for glazing panels with a vision area greater than 1.0 square meters

(10.8 square feet) but less than or equal to 3.0 square meters (32 square feet). Loads shall be applied to the surface of the glazing and frame. Connections and hardware may be designed based on ultimate strength for steel and 0.2% offset yield strength for aluminum.

f. Section B-3.3 Standard 12 Exterior Doors: For all new and existing buildings covered by these standards, ensure that all exterior doors into inhabited areas open outwards. By doing so, the doors will seat into the door frames in response to an explosive blast, increasing the likelihood that the doors will not enter the buildings as hazardous debris. Alternatively, position doors such that they will not be propelled into rooms if they fail in response to a blast or provide other means to ensure they do not become hazards to building occupants.

## 1.5 SUBMITTALS

A. Product Data: Include construction details, material descriptions, fabrication methods, dimensions of individual components and profiles, hardware, finishes, and operating instructions for each type of aluminum window indicated.

B. Shop Drawings: Include plans, elevations, sections, details, hardware, attachments to other work, operational clearances, installation details, and the following:

1. Joinery details.
2. Expansion provisions.
3. Thermal-break details.
4. Glazing details.
5. Window cleaning provisions.
6. For installed products indicated to comply with design loads, include structural analysis data prepared by or under the supervision of a qualified professional engineer detailing fabrication and assembly of aluminum windows and used to determine the following:

   a. Structural test pressures and design pressures from wind loads indicated.
   b. Deflection limitations of glass framing systems.

C. Samples: Provide samples for verification of each product type.

## 1.6 QUALITY ASSURANCE

A. Installer Qualifications: An installer acceptable to aluminum window manufacturer for installation of units required for this Project.

1. Installer's responsibilities include providing professional engineering services needed to assume engineering responsibility.
2. Engineering Responsibility: Preparation of data for aluminum windows, including Shop Drawings, based on testing and engineering analysis of manufacturer's standard units in assemblies similar to those indicated for this Project.

B. Manufacturer Qualifications: A manufacturer capable of fabricating aluminum windows that meet or exceed performance requirements indicated and of documenting this performance by inclusion in lists and by labels, test reports, and calculations.

C. Source Limitations: Obtain aluminum windows through one source from a single manufacturer.

D. Product Options: Information on Drawings and in Specifications establishes requirements for aluminum windows' aesthetic effects and performance characteristics. Aesthetic effects are indicated by dimensions, arrangements, alignment, and profiles of components and assemblies as they relate to sightlines, to one another, and to adjoining construction. Performance characteristics are indicated by criteria subject to verification by one or more methods including preconstruction testing, field testing, and in-service performance.

E. Product Options: Drawings indicate size, profiles, and dimensional requirements of aluminum windows and are based on the specific system indicated. Refer to Division 01 Section "Product Requirements." Do not modify size and dimensional requirements.

1. Do not modify intended aesthetic effects, as judged solely by Architect, except with Architect's approval. If modifications are proposed, submit comprehensive explanatory data to Architect for review.

F. Fenestration Standard: Comply with AAMA/WDMA 101/I.S.2/NAFS, "North American Fenestration Standard Voluntary Performance Specification for Windows, Skylights and Glass Doors," for definitions and minimum standards of performance, materials, components, accessories, and fabrication. Comply with more stringent requirements if indicated.

1. Provide AAMA-certified aluminum windows with an attached label.

G. Glazing Publications: Comply with published recommendations of glass manufacturers and with GANA's "Glazing Manual" unless more stringent requirements are indicated.

## 1.7 PROJECT CONDITIONS

A. Field Measurements: Verify aluminum window openings by field measurements before fabrication and indicate measurements on Shop Drawings.

1. Established Dimensions: Where field measurements cannot be made without delaying the Work, establish opening dimensions and proceed with fabricating aluminum windows without field measurements. Coordinate wall construction to ensure that actual opening dimensions correspond to established dimensions.

## 1.8 WARRANTY

A. Special Warranty: Manufacturer's standard form in which manufacturer agrees to repair or replace aluminum windows that fail in materials or workmanship within specified warranty period.

1. Failures include, but are not limited to, the following:

a. Failure to meet performance requirements.
b. Structural failures including excessive deflection, water leakage, air infiltration, or condensation.
c. Faulty operation of movable sash and hardware.
d. Deterioration of metals, other materials, and metal finishes beyond normal weathering.
e. Failure of insulating glass.

2. Warranty Period:

a. Window: Two years from date of Substantial Completion.
b. Metal Finish: Five years from date of Substantial Completion.

## PART 2 - PRODUCTS

### 2.1 MANUFACTURERS

A. Available Manufacturers: Subject to compliance with requirements, manufacturers offering products that may be incorporated into the Work include, but are not limited to, the following:

1. Kawneer; an Alcoa Company, 1600 System.
2. EFCO Corporation.
3. Vistawall Architectural Products.

### 2.2 WINDOW

A. Window Type: As indicated on Drawings.

B. AAMA/WDMA Performance Requirements: Provide aluminum windows of performance indicated that comply with AAMA/WDMA 101/I.S.2/NAFS and as indicated above.

1. Performance Class: HC.

### 2.3 GLAZING

A. Glass and Glazing Materials: Refer to Division 08 Section "Glazing" for glass units and glazing requirements applicable to glazed aluminum window units.

### 2.4 FABRICATION

A. Fabricate aluminum windows in sizes indicated. Include a complete system for assembling components and anchoring windows.

B. Fabricate aluminum windows that are reglazable without dismantling sash or ventilator framing.

C. Thermally Improved Construction: Fabricate aluminum windows with an integral, concealed, low-conductance thermal barrier; located between exterior materials and window members exposed on interior side; in a manner that eliminates direct metal-to-metal contact.

1. Provide thermal-break construction that has been in use for not less than three years and has been tested to demonstrate resistance to thermal conductance and condensation and to show adequate strength and security of glass retention.
2. Provide thermal barriers tested according to AAMA 505; determine the allowable design shear flow per the appendix in AAMA 505.
3. Provide hardware with low conductivity or nonmetallic material for hardware bridging thermal breaks at frame or vent sash.

D. Weep Holes: Provide weep holes and internal passages to conduct infiltrating water to exterior.

E. Provide water-shed members above side-hinged ventilators and similar lines of natural water penetration.

F. Glazing Stops: Provide snap-on glazing stops coordinated with Division 08 Section "Glazing" and glazing system indicated. Provide glazing stops to match sash and ventilator frames.

2.5 FINISHES, GENERAL

A. Comply with NAAMM's "Metal Finishes Manual for Architectural and Metal Products" for recommendations for applying and designating finishes.

B. Protect mechanical finishes on exposed surfaces from damage by applying a strippable, temporary protective covering before shipping.

C. Appearance of Finished Work: Variations in appearance of abutting or adjacent pieces are acceptable if they are within one-half of the range of approved Samples. Noticeable variations in the same piece are not acceptable. Variations in appearance of other components are acceptable if they are within the range of approved Samples and are assembled or installed to minimize contrast.

2.6 ALUMINUM FINISHES

A. Finish designations prefixed by AA comply with the system established by the Aluminum Association for designating aluminum finishes.

B. Class I, Color Anodic Finish: AA-M12C22A42/A44 (Mechanical Finish: nonspecular as fabricated; Chemical Finish: etched, medium matte; Anodic Coating: Architectural Class I, integrally colored or electrolytically deposited color coating 0.018 mm or thicker) complying with AAMA 611.

1. Color: Medium bronze.

PART 3 - EXECUTION

3.1 EXAMINATION

A. Examine openings, substrates, structural support, anchorage, and conditions, with Installer present, for compliance with requirements for installation tolerances and other conditions affecting performance of work. Verify rough opening dimensions, levelness of sill plate, and operational clearances. Examine wall flashings, vapor retarders, water and weather barriers, and other built-in components to ensure a coordinated, weathertight window installation.

1. Masonry Surfaces: Visibly dry and free of excess mortar, sand, and other construction debris.
2. Wood Frame Walls: Dry, clean, sound, well nailed, free of voids, and without offsets at joints. Ensure that nail heads are driven flush with surfaces in opening and within 3 inches (76 mm) of opening.
3. Metal Surfaces: Dry; clean; free of grease, oil, dirt, rust, corrosion, and welding slag; without sharp edges or offsets at joints.
4. Proceed with installation only after unsatisfactory conditions have been corrected.

3.2 INSTALLATION

A. Comply with Drawings, Shop Drawings, and manufacturer's written instructions for installing windows, hardware, accessories, and other components.

B. Install windows level, plumb, square, true to line, without distortion or impeding thermal movement, anchored securely in place to structural support, and in proper relation to wall flashing and other adjacent construction.

C. Set sill members in bed of sealant or with gaskets, as indicated, for weathertight construction.

D. Install windows and components to drain condensation, water penetrating joints, and moisture migrating within windows to the exterior.

E. Separate aluminum and other corrodible surfaces from sources of corrosion or electrolytic action at points of contact with other materials.

3.3 ADJUSTING, CLEANING, AND PROTECTION

A. Adjust operating sashes and ventilators, screens, hardware, and accessories for a tight fit at contact points and weather stripping for smooth operation and weathertight closure. Lubricate hardware and moving parts.

B. Clean aluminum surfaces immediately after installing windows. Avoid damaging protective coatings and finishes. Remove excess sealants, glazing materials, dirt, and other substances.

C. Protect window surfaces from contact with contaminating substances resulting from construction operations. In addition, monitor window surfaces adjacent to and below exterior concrete and masonry surfaces during construction for presence of dirt, scum, alkaline deposits, stains, or other contaminants. If contaminating substances do contact window surfaces, remove contaminants immediately according to manufacturer's written recommendations.

**END OF SECTION 085113**

**SECTION 087100 - DOOR HARDWARE**

PART 1 - GENERAL

1.1 RELATED DOCUMENTS

A. Drawings and general provisions of the Contract, including General and Supplementary Conditions and Division 1 Specification Sections, apply to this Section.

1.2 SUMMARY

A. This Section includes the following:

1. Commercial door hardware for the following:

a. Swinging doors.
b. Sliding doors.
c. Folding doors.
d. Other doors to the extent indicated.

2. Cylinders for doors specified in other Sections.

3. Quick Access Security Lock Box.

B. Related Sections include the following:

1. Division 8 Section "Steel Doors and Frames" for astragals provided as part of a fire-rated labeled assembly and for door silencers provided as part of the frame.
2. Division 8 Section "Stile and Rail Wood Doors" for astragals provided as part of a fire-rated labeled assembly.
3. Division 8 Section "Aluminum Entrances and Storefronts" for entrance door hardware, except cylinder.
4. Division 26 Section “ Security System Narrative” for security hardware rough in information.

C. Products furnished, but not installed, under this Section include the following. Coordinating, purchasing, delivering, and scheduling remain requirements of this Section.

1. Final replacement cores and keys to be installed by Owner.

1.3 SUBMITTALS

A. Product Data: Include installation details, material descriptions, dimensions of individual components and profiles, and finishes.

B. Door Hardware Schedule: Prepared by or under the supervision of supplier, detailing fabrication and assembly of door hardware, as well as procedures and diagrams. Coordinate the final Door Hardware Schedule with doors, frames, and related work to ensure proper size, thickness, hand, function, and finish of door hardware.

1. Format: Comply with scheduling sequence and vertical format in DHI's "Sequence and Format for the Hardware Schedule."
2. Organization: Organize the Door Hardware Schedule into door hardware sets indicating complete designations of every item required for each door or opening.

    a. Organize door hardware sets in same order as in the Door Hardware Schedule at the end of Part 3.

3. Content: Include the following information:

    a. Type, style, function, size, label, hand, and finish of each door hardware item.
    b. Manufacturer of each item.
    c. Fastenings and other pertinent information.
    d. Location of each door hardware set, cross-referenced to Drawings, both on floor plans and in door and frame schedule.
    e. Explanation of abbreviations, symbols, and codes contained in schedule.
    f. Mounting locations for door hardware.
    g. Door and frame sizes and materials.

4. Submittal Sequence: Submit the final Door Hardware Schedule at earliest possible date, particularly where approval of the Door Hardware Schedule must precede fabrication of other work that is critical in the Project construction schedule. Include Product Data, Samples, Shop Drawings of other work affected by door hardware, and other information essential to the coordinated review of the Door Hardware Schedule.
5. Submittal Sequence: Submit initial draft of final schedule along with essential Product Data to facilitate the fabrication of other work that is critical in the Project construction schedule. Submit the final Door Hardware Schedule after Samples, Product Data, coordination with Shop Drawings of other work, delivery schedules, and similar information has been completed and accepted.

C. Keying Schedule: Prepared by or under the supervision of supplier, detailing Owner's final keying instructions for locks. Include schematic keying diagram and index each key set to unique door designations.

D. Maintenance Data: For each type of door hardware to include in maintenance manuals specified in Division 1.

E. Warranties: Special warranties specified in this Section.

## 1.4 QUALITY ASSURANCE

A. Installer Qualifications: An experienced installer who has completed door hardware similar in material, design, and extent to that indicated for this Project and whose work has resulted in construction with a record of successful in-service performance.

B. Supplier Qualifications: Door hardware supplier with warehousing facilities in Project's vicinity and who is or employs a qualified Architectural Hardware Consultant, available during the course of the Work to consult with Contractor, Architect, and Owner about door hardware and keying.

    1. Scheduling Responsibility: Preparation of door hardware and keying schedules.

C. Architectural Hardware Consultant Qualifications: A person who is currently certified by the Door and Hardware Institute as an Architectural Hardware Consultant and who is experienced in providing consulting services for door hardware installations that are comparable in material, design, and extent to that indicated for this Project.

D. Source Limitations: Obtain each type and variety of door hardware from a single manufacturer, unless otherwise indicated.

E. Regulatory Requirements: Comply with provisions of the following:

1. Where indicated to comply with accessibility requirements, comply with “Accessibility Guidelines for Buildings and Facilities (ADAAG)," and the Uniform Federal Accessibility Standards,"as follows:

a. Handles, Pulls, Latches, Locks, and other Operating Devices: Shape that is easy to grasp with one hand and does not require tight grasping, tight pinching, or twisting of the wrist.
b. Door Closers: Comply with the following maximum opening-force requirements indicated:

1) Interior Hinged Doors: 5 lbf applied perpendicular to door.
2) Sliding or Folding Doors: 5 lbf applied parallel to door at latch.
3) Fire Doors: Minimum opening force allowable by authorities having jurisdiction.

c. Thresholds: Not more than 1/2 inch high. Bevel raised thresholds with a slope of not more than 1:2.

2. NFPA 101: Comply with the following for means of egress doors:

a. Latches, Locks, and Exit Devices: Not more than 15 lbf to release the latch. Locks shall not require the use of a key, tool, or special knowledge for operation.
b. Door Closers: Not more than 30 lbf to set door in motion and not more than 15 lbf to open door to minimum required width.
c. Thresholds: Not more than 1/2 inch high.

F. Fire-Rated Door Assemblies: Provide door hardware for assemblies complying with NFPA 80 that are listed and labeled by a testing and inspecting agency acceptable to authorities having jurisdiction, for fire ratings indicated, based on testing according to NFPA 252.

1. Test Pressure: Test at atmospheric pressure.

G. Keying Conference: Conduct conference at Project site to comply with requirements in Division 1 Section "Project Meetings." Incorporate keying conference decisions into final keying schedule after reviewing door hardware keying system including, but not limited to, the following:

1. Function of building, flow of traffic, purpose of each area, degree of security required, and plans for future expansion.
2. Preliminary key system schematic diagram.
3. Requirements for key control system.
4. Address for delivery of keys.

H. Pre-installation Conference: Conduct conference at Project site to comply with requirements in Division 1 Section "Project Meetings."

## 1.5 DELIVERY, STORAGE, AND HANDLING

A. Inventory door hardware on receipt and provide secure lock-up for door hardware delivered to Project site.

B. Tag each item or package separately with identification related to the final Door Hardware Schedule, and include basic installation instructions with each item or package.

C. Deliver keys to Owner's representative.

## 1.6 COORDINATION

A. Coordinate layout and installation of recessed pivots and closers with floor construction. Cast anchoring inserts into concrete. Concrete, reinforcement, and formwork requirements are specified in Division 3 Section "Cast-in-Place Concrete."

B. Templates: Obtain and distribute to the parties involved templates for doors, frames, and other work specified to be factory prepared for installing door hardware. Check Shop Drawings of other work to confirm that adequate provisions are made for locating and installing door hardware to comply with indicated requirements.

## 1.7 WARRANTY

A. General Warranty: Special warranties specified in this Article shall not deprive Owner of other rights Owner may have under other provisions of the Contract Documents and shall be in addition to, and run concurrent with, other warranties made by Contractor under requirements of the Contract Documents.

B. Special Warranty: Written warranty, executed by manufacturer agreeing to repair or replace components of door hardware that fail in materials or workmanship within specified warranty period. Failures include, but are not limited to, the following:

1. Structural failures including excessive deflection, cracking, or breakage.
2. Faulty operation of operators and door hardware.
3. Deterioration of metals, metal finishes, and other materials beyond normal weathering.

C. Warranty Period: Three years from date of Substantial Completion, unless otherwise indicated.

D. Warranty Period for Manual Closers: 10 years from date of Substantial Completion.

## 1.8 MAINTENANCE SERVICE

A. Maintenance Tools and Instructions: Furnish a complete set of specialized tools and maintenance instructions as needed for Owner's continued adjustment, maintenance, and removal and replacement of door hardware.

B. Maintenance Service: Beginning at Substantial Completion, provide six months' full maintenance by skilled employees of door hardware Installer. Include quarterly preventive maintenance, repair or replacement of worn or defective components, lubrication, cleaning, and adjusting as required for proper door hardware operation. Provide parts and supplies as used in the manufacture and installation of original products.

## 1.9 EXTRA MATERIALS

A. Furnish full-size units of door hardware described below, before installation begins, that match products installed and that are packaged with protective covering for storage and identified with labels describing contents.

PART 2 - PRODUCTS

2.1 MANUFACTURERS

A.

| PRODUCTS | MANUFACTURERS | ACCEPTABLE |
|---|---|---|
| Hinges | Hager | McKinney |
| Locks, Latches, Cylinders | Schlage | Sargent |
| Closers | LCN | Sargent |
| Exit Devices | Von Duprin | Sargent |
| Stops, Flush Bolts, Viewers | Ives | Rockwood |
| Push, Pulls, Kickplates | Rockwood | Ives |
| Overhead Stops | Glynn Johnson | Sargent |
| Threshold, Sweep, Smoke Seal Head-Jamb Strips, Weatherstrip | National Guard | Pemko |

2.2 SCHEDULED DOOR HARDWARE

A. General: Provide door hardware for each door to comply with requirements in this Section, and the Door Hardware Schedule at the end of Part 3.

1. Door Hardware Sets: Provide quantity, item, size, finish or color indicated, and named manufacturer's products.

B. Designations: Requirements for design, grade, function, finish, size, and other distinctive qualities of each type of door hardware are indicated in the Door Hardware Schedule at the end of Part 3. Products are identified by using door hardware designations, as follows:

1. Named Manufacturer's Products: Product designation and manufacturer are listed for each door hardware type required for the purpose of establishing minimum requirements. Manufacturers' names are abbreviated in the Door Hardware Schedule.

2.3 HINGES AND PIVOTS

A. Available Manufacturers: Subject to compliance with requirements, manufacturers offering products that may be incorporated into the Work include, but are not limited to, the following:

1. See List at Hardware sets.

B. Quantity: Provide the following, unless otherwise indicated:

1. Two Hinges: For doors with heights up to 60 inches.
2. Three Hinges: For doors with heights 61 to 90 inches.
3. Four Hinges: For doors with heights 91 to 120 inches.
4. For doors with heights more than 120 inches, provide 4 hinges, plus 1 hinge for every 30 inches of door height greater than 120 inches.

C. Size: Provide the following, unless otherwise indicated, with hinge widths sized for door thickness and clearances required:

| Maximum Door Size (inches) | Hinge Height (inches) | Metal Thickness (inches) Standard Weight | Heavy Weight |
|---|---|---|---|
| 32 by 84 by 1-3/8 | 3-1/2 | 0.123 | - |
| 36 by 84 by 1-3/8 | 4 | 0.130 | - |
| 36 by 84 by 1-3/4 | 4-1/2 | 0.134 | 0.180 |
| 42 by 90 by 1-3/4 | 4-1/2 | 0.134 | 0.180 |
| 48 by 120 by 1-3/4 | 5 | 0.146 | 0.190 |

| Maximum Door Size (mm) | Hinge Height (mm) | Metal Thickness (mm) Standard Weight | Heavy Weight |
|---|---|---|---|
| 813 by 2134 by 35 | 89 | 3.1 | - |
| 914 by 2134 by 35 | 102 | 3.3 | - |
| 914 by 2286 by 38 | 114 | 3.4 | 4.6 |
| 1067 by 2286 by 38 | 114 | 3.4 | 4.6 |
| 1219 by 3048 by 38 | 127 | 3.7 | 4.8 |

D. Template Requirements: Except for hinges and pivots to be installed entirely (both leaves) into wood doors and frames, provide only template-produced units.

E. Hinge Weight: Unless otherwise indicated, provide the following:

1. Entrance Doors: Heavy-weight hinges.
2. Doors with Closers: Antifriction-bearing hinges.
3. Interior Doors: Standard-weight hinges.

F. Hinge Base Metal: Unless otherwise indicated, provide the following:

1. Exterior Hinges: Brass, with stainless-steel pin body and brass protruding heads.
2. Interior Hinges: Steel, with steel pin.
3. Hinges for Fire-Rated Assemblies: Steel, with steel pin.

G. Hinge Options: Comply with the following where indicated in the Door Hardware Schedule or on Drawings:

1. Hospital Tips: Slope ends of hinge barrel.
2. Maximum Security Pin: Fix pin in hinge barrel after it is inserted.
3. Nonremovable Pins: Provide set screw in hinge barrel that, when tightened into a groove in hinge pin, prevents removal of pin while door is closed; for the following applications:

   a. Outswinging exterior doors.
   b. Outswinging corridor doors with locks.

4. Corners: Square.

H. Fasteners: Comply with the following:

1. Machine Screws: For metal doors and frames. Install into drilled and tapped holes.

2. Wood Screws: For wood doors and frames.
3. Threaded-to-the-Head Wood Screws: For fire-rated wood doors.
4. Screws: Phillips flat-head screws; machine screws (drilled and tapped holes) for metal doors and wood screws for wood doors and frames. Finish screw heads to match surface of hinges.

## 2.4 LOCKS AND LATCHES

A. Available Manufacturers: Subject to compliance with requirements, manufacturers offering products that may be incorporated into the Work include, but are not limited to, the following:
   1. See Hardware List.

B. Lock Trim: Comply with the following:

   1. Lever: Wrought.
   2. Escutcheon (Rose): Wrought.
   3. Dummy Trim: Match lever lock trim and escutcheons.
   4. Lockset Designs: Provide the lockset design designated below or, if sets are provided by another manufacturer, provide designs that match those designated:

      a. Bored Locks: See Hardware Sets.

C. Lock Throw: Comply with testing requirements for length of bolts to comply with labeled fire door requirements, and as follows:

   1. Bored Locks: Minimum 1/2-inch latchbolt throw.
   2. Mortise Locks: Minimum 3/4-inch latchbolt throw.
   3. Deadbolts: Minimum 1-inch bolt throw.

D. Rabbeted Doors: Provide special rabbeted front and strike on locksets for rabbeted meeting stiles.

E. Backset: 2-3/4 inches, unless otherwise indicated.

## 2.5 DOOR BOLTS

A. Available Manufacturers: Subject to compliance with requirements, manufacturers offering products that may be incorporated into the Work include, but are not limited to, the following:

   1. See Hardware List.

B. Bolt Throw: Comply with testing requirements for length of bolts to comply with labeled fire door requirements, and as follows:

   1. Half-Round Surface Bolts: Minimum 7/8-inch throw.
   2. Interlocking Surface Bolts: Minimum 15/16-inch throw.
   3. Fire-Rated Surface Bolts: Minimum 1-inch throw; listed and labeled for fire-rated doors.
   4. Dutch-Door Bolts: Minimum 3/4-inch throw.
   5. Mortise Flush Bolts: Minimum 3/4-inch throw.

## 2.6 EXIT DEVICES

A. Available Manufacturers: Subject to compliance with requirements, manufacturers offering products that may be incorporated into the Work include, but are not limited to, the following:

1. See Hardware List.

B. Panic Exit Devices: Listed and labeled by a testing and inspecting agency acceptable to authorities having jurisdiction, for panic protection, based on testing according to UL 305.

C. Fire Exit Devices: Complying with NFPA 80 that are listed and labeled by a testing and inspecting agency acceptable to authorities having jurisdiction, for fire and panic protection, based on testing according to UL 305 and NFPA 252.

D. Dummy Push Bar: Nonfunctioning push bar matching functional push bar.

1. Operation: Movable.

E. Outside Trim: Pull with cylinder; material and finish to match locksets, unless otherwise indicated.

1. Match design for locksets and latchsets, unless otherwise indicated.

F. Through Bolts: For exit devices and trim on metal doors, all non-fire-rated wood doors and fire-rated wood doors.

## 2.7 CYLINDERS AND KEYING

A. Available Manufacturers: Subject to compliance with requirements, manufacturers offering products that may be incorporated into the Work include, but are not limited to, the following:

1. Cylinders: Same manufacturer as for locks and latches.
2. Key Control Systems:

a. Key Control Systems, Inc. (KCS).
b. Telkee.

B. Cylinders: Manufacturer's standard tumbler type, constructed from brass or bronze, stainless steel, or nickel silver, and complying with the following:

1. Number of Pins: Six.
2. Mortise Type: Threaded cylinders with rings and straight- or clover-type cam.
3. Rim Type: Cylinders with back plate, flat-type vertical or horizontal tailpiece, and raised trim ring.
4. Bored-Lock Type: Cylinders with tailpieces to suit locks.

C. Construction Keying: Comply with the following:

1. Construction Master Keys: Provide cylinders with feature that permits voiding of construction keys without cylinder removal. Provide 10 construction master keys.

D. Keying System: Unless otherwise indicated, provide a factory-registered keying system complying with the following requirements:

1. Grand Master Key System: Cylinders are operated by a change key, a master key, and a grand master key.

E. Keys: Provide nickel-silver keys complying with the following:

1. Stamping: Permanently inscribe each key with a visual key control number and include the following notation:

a. Notation: "DO NOT DUPLICATE."

2. Quantity: In addition to one extra blank key for each lock, provide the following:

a. Cylinder Change Keys: Three.
b. Master Keys: Five.
c. Grand Master Keys: Five.

F. Key Control System: BHMA Grade 1 system, including key-holding hooks, labels, two sets of key tags with self-locking key holders, key-gathering envelopes, and temporary and permanent markers. Contain system in metal cabinet with baked-enamel finish.

1. Wall-Mounted Cabinet: Cabinet with hinged-panel door equipped with key-holding panels and pin-tumbler cylinder door lock.
2. Capacity: Able to hold keys for 150 percent of the number of locks.
3. Cross-Index System: Set up by key control manufacturer, complying with the following:

a. Card Index: Furnish four sets of index cards for recording key information. Include three receipt forms for each key-holding hook.
b. Computer Software: Furnish cross-index software for recording and reporting key-holder listings, tracking keys and lock and key history, and printing receipts for transactions. Include instruction manual.

## 2.8 STRIKES

A. Strikes: Provide manufacturer's standard strike with strike box for each latch or lock bolt, with curved lip extended to protect frame, finished to match door hardware set, unless otherwise indicated, and as follows:

1. Flat-Lip Strikes: For locks with three-piece antifriction latchbolts, as recommended by manufacturer.
2. Extra-Long-Lip Strikes: For locks used on frames with applied wood casing trim.
3. Aluminum-Frame Strike Box: Provide manufacturer's special strike box fabricated for aluminum framing.

## 2.9 OPERATING TRIM

A. Available Manufacturers: Subject to compliance with requirements, manufacturers offering products that may be incorporated into the Work include, but are not limited to, the following:

1. See Hardware Sets.

## 2.10 ACCESSORIES FOR PAIRS OF DOORS

A. Available Manufacturers: Subject to compliance with requirements, manufacturers offering products that may be incorporated into the Work include, but are not limited to, the following:

1. See Hardware List.

B. Fire-Exit Removable Mullions: Provide removable mullions for use with fire exit devices complying with NFPA 80 that are listed and labeled by a testing and inspecting agency acceptable to authorities having jurisdiction, for fire and panic protection, based on testing according to UL 305 and NFPA 252. Mullions shall be used only with exit devices for which they have been tested.

## 2.11 CLOSERS

A. Available Manufacturers: Subject to compliance with requirements, manufacturers offering products that may be incorporated into the Work include, but are not limited to, the following:

1. See Hardware List.

B. Power-Assist Closers: As specified in Division 8 Section "Power Door Operators" for access doors for the disabled or where listed in the Door Hardware Schedule. Provide electrohydraulic, electromechanical, and pneumatic types as indicated.

C. Size of Units: Unless otherwise indicated, comply with manufacturer's written recommendations for size of door closers depending on size of door, exposure to weather, and anticipated frequency of use. Provide factory-sized closers, adjustable to meet field conditions and requirements for opening force.

## 2.12 PROTECTIVE TRIM UNITS

A. Available Manufacturers: Subject to compliance with requirements, manufacturers offering products that may be incorporated into the Work include, but are not limited to, the following:

1. See Hardware List.

B. Materials: Fabricate protection plates from the following:

1. Stainless Steel: 0.050 inch thick; beveled top and 2 sides.

C. Fasteners: Provide manufacturer's standard exposed fasteners for door trim units consisting of either machine or self-tapping screws.

D. Furnish protection plates sized 1-1/2 inches less than door width on push side and 1/2 inch less than door width on pull side, by height specified in Door Hardware Schedule.

2.13 STOPS AND HOLDERS

A. Available Manufacturers: Subject to compliance with requirements, manufacturers offering products that may be incorporated into the Work include, but are not limited to, the following:

1. See Hardware List.

2.14 DOOR GASKETING

A. Available Manufacturers: Subject to compliance with requirements, manufacturers offering products that may be incorporated into the Work include, but are not limited to, the following:

1. See Hardware List.

B. General: Provide continuous weather-strip gasketing on exterior doors and provide smoke, light, or sound gasketing on interior doors where indicated or scheduled. Provide noncorrosive fasteners for exterior applications and elsewhere as indicated.

1. Perimeter Gasketing: Apply to head and jamb, forming seal between door and frame.

C. Air Leakage: Not to exceed 0.50 cfm per foot of crack length for gasketing other than for smoke control, as tested according to ASTM E 283.

D. Smoke-Labeled Gasketing: Assemblies complying with NFPA 105 that are listed and labeled by a testing and inspecting agency acceptable to authorities having jurisdiction, for smoke-control ratings indicated, based on testing according to UL 1784.

1. Provide smoke-labeled gasketing on 20-minute-rated doors and on smoke-labeled doors.

E. Fire-Labeled Gasketing: Assemblies complying with NFPA 80 that are listed and labeled by a testing and inspecting agency acceptable to authorities having jurisdiction, for fire ratings indicated, based on testing according to UL 10B or NFPA 252.

F. Replaceable Seal Strips: Provide only those units where resilient or flexible seal strips are easily replaceable and readily available from stocks maintained by manufacturer.

G. Gasketing Materials: Comply with ASTM D 2000 and AAMA 701/702.

2.15 THRESHOLDS

A. Available Manufacturers: Subject to compliance with requirements, manufacturers offering products that may be incorporated into the Work include, but are not limited to, the following:

1. See Hardware List.

2.16 SLIDING DOOR HARDWARE

A. Available Manufacturers: Subject to compliance with requirements, manufacturers offering products that may be incorporated into the Work include, but are not limited to, the following

1. Henderson: P. C. Henderson Inc.; Div. of Hepworth PLC (PCH).

B. Sliding Door Hardware: Provide complete sets consisting of rails, hangers, supports, bumpers, floor guides, and accessories indicated.

1. Exterior Doors: Provide galvanized steel or anodized-aluminum door hardware.

2.17 FOLDING DOOR HARDWARE

A. By Door Manufacturer. Provide complete sets consisting of overhead rails, hangers, supports, bumpers, floor guides, and accessories required.

2.18 MISCELLANEOUS DOOR HARDWARE

A. Available Manufacturers: Subject to compliance with requirements, manufacturers offering products that may be incorporated into the Work include, but are not limited to, the following:

1. Quick Access Security Lock Box:
   a. Knox-Box 3200 Series by “Knox Company”.
   b. Lift-off door model.
   c. Recessed Mounting Kit (RMK), 6” x 6” x 4”.
   d. Location as indicated on plans.
   e. Color: Dark Bronze.

2.19 FABRICATION

A. Manufacturer's Nameplate: Do not provide manufacturers' products that have manufacturer's name or trade name displayed in a visible location (omit removable nameplates) except in conjunction with required fire-rated labels and as otherwise approved by Architect.

1. Manufacturer's identification will be permitted on rim of lock cylinders only.

B. Base Metals: Produce door hardware units of base metal, fabricated by forming method indicated, using manufacturer's standard metal alloy, composition, temper, and hardness. Furnish metals of a quality equal to or greater than that of specified door hardware units and BHMA A156.18 for finishes. Do not furnish manufacturer's standard materials or forming methods if different from specified standard.

C. Fasteners: Provide door hardware manufactured to comply with published templates generally prepared for machine, wood, and sheet metal screws. Provide screws according to commercially recognized industry standards for application intended. Provide Phillips flat-head screws with finished heads to match surface of door hardware, unless otherwise indicated.

1. Concealed Fasteners: For door hardware units that are exposed when door is closed, except for units already specified with concealed fasteners. Do not use through bolts for installation where bolt head or nut on opposite face is exposed unless it is the only means of securely attaching the

door hardware. Where through bolts are used on hollow door and frame construction, provide sleeves for each through bolt.

2. Steel Machine or Wood Screws: For the following fire-rated applications:

   a. Mortise hinges to doors.
   b. Strike plates to frames.
   c. Closers to doors and frames.

3. Steel Through Bolts: For the following fire-rated applications, unless door blocking is provided:

   a. Surface hinges to doors.
   b. Closers to doors and frames.
   c. Surface-mounted exit devices.

4. Spacers or Sex Bolts: For through bolting of hollow metal doors.
5. Fasteners for Wood Doors: Comply with requirements of DHI WDHS.2, "Recommended Fasteners for Wood Doors."

2.20 FINISHES

A. Standard: Comply with BHMA A156.18.

B. Protect mechanical finishes on exposed surfaces from damage by applying a strippable, temporary protective covering before shipping.

C. Appearance of Finished Work: Variations in appearance of abutting or adjacent pieces are acceptable if they are within one-half of the range of approved Samples. Noticeable variations in the same piece are not acceptable. Variations in appearance of other components are acceptable if they are within the range of approved Samples and are assembled or installed to minimize contrast.

PART 3 - EXECUTION

3.1 EXAMINATION

A. Examine doors and frames, with Installer present, for compliance with requirements for installation tolerances, labeled fire door assembly construction, wall and floor construction, and other conditions affecting performance.

B. Proceed with installation only after unsatisfactory conditions have been corrected.

3.2 PREPARATION

A. Steel Doors and Frames: Comply with DHI A115 series.

   1. Surface-Applied Door Hardware: Drill and tap doors and frames according to SDI 107.

B. Wood Doors: Comply with DHI A115-W series.

C. Security and Access Systems: Rough in and coordinate all security and access information as outlined in Section 16730.

## 3.3 INSTALLATION

A. Mounting Heights: Mount door hardware units at heights indicated in following applicable publications, unless specifically indicated or required to comply with governing regulations:

1. Standard Steel Doors and Frames: DHI's "Recommended Locations for Architectural Hardware for Standard Steel Doors and Frames."
2. Custom Steel Doors and Frames: DHI's "Recommended Locations for Builders' Hardware for Custom Steel Doors and Frames."
3. Wood Doors: DHI WDHS.3, "Recommended Locations for Architectural Hardware for Wood Flush Doors."

B. Install each door hardware item to comply with manufacturer's written instructions. Where cutting and fitting are required to install door hardware onto or into surfaces that are later to be painted or finished in another way, coordinate removal, storage, and reinstallation of surface protective trim units with finishing work specified in Division 9 Sections. Do not install surface-mounted items until finishes have been completed on substrates involved.

1. Set units level, plumb, and true to line and location. Adjust and reinforce attachment substrates as necessary for proper installation and operation.
2. Drill and countersink units that are not factory prepared for anchorage fasteners. Space fasteners and anchors according to industry standards.

C. Key Control System: Place keys on markers and hooks in key control system cabinet, as determined by final keying schedule.

D. Thresholds: Set thresholds for exterior and acoustical doors in full bed of sealant complying with requirements specified in Division 7 Section "Joint Sealants."

E. Security and Access Systems: Rough in and coordinate all security and access information as outlined in Section 260730.

## 3.4 FIELD QUALITY CONTROL

A. Independent Architectural Hardware Consultant: Owner will engage a qualified independent Architectural Hardware Consultant to perform inspections and to prepare inspection reports.

1. Independent Architectural Hardware Consultant will inspect door hardware and state in each report whether installed work complies with or deviates from requirements, including whether door hardware is properly installed and adjusted.

## 3.5 ADJUSTING

A. Initial Adjustment: Adjust and check each operating item of door hardware and each door to ensure proper operation or function of every unit. Replace units that cannot be adjusted to operate as intended. Adjust door control devices to compensate for final operation of heating and ventilating equipment and to comply with referenced accessibility requirements.

1. Spring Hinges: Adjust to achieve positive latching when door is allowed to close freely from an open position of 30 degrees.
2. Door Closers: Adjust sweep period so that, from an open position of 70 degrees, the door will take at least 3 seconds to move to a point 3 inches (75 mm) from the latch, measured to the leading edge of the door.

B. Six-Month Adjustment: Approximately six months after date of Substantial Completion, Installer shall perform the following:

1. Examine and readjust each item of door hardware as necessary to ensure function of doors, door hardware, and electrified door hardware.
2. Consult with and instruct Owner's personnel on recommended maintenance procedures.
3. Replace door hardware items that have deteriorated or failed due to faulty design, materials, or installation of door hardware units.

## 3.6 CLEANING AND PROTECTION

A. Clean adjacent surfaces soiled by door hardware installation.

B. Clean operating items as necessary to restore proper function and finish.

C. Provide final protection and maintain conditions that ensure door hardware is without damage or deterioration at time of Substantial Completion.

## 3.7 DEMONSTRATION

A. Engage a factory-authorized service representative to train Owner's maintenance personnel to adjust, operate, and maintain door hardware and door hardware finishes.

## 3.8 DOOR HARDWARE SCHEDULE

| Abbr | Name |
|---|---|
| B/O | BY OTHERS |
| BYO | BY OTHERS |
| COB | HILLALDAM COBURN LIMITED |
| GLY | GLYNN-JOHNSON CORP |
| HAG | HAGER COMPANIES |
| JOH | JOHNSON HARDWARE |
| LCN | LCN COMMERCIAL DIVISION |
| MDS | MARSHFIELD DOORSYSTEMS, INC. |
| NGP | NATIONAL GUARD PRODUCTS INC |
| RIX | RIXSON SPECIALTY DOOR CONTROLS |
| ROC | ROCKWOOD MANUFACTURING CO. |
| SCH | SCHLAGE LOCK COMPANY |
| SIM | SIMPLEX ACCESS CONTROLS |
| STE | STEELCRAFT |

HW SET: 01

| Each SINGLE DOOR To Have: | | | NON-RTD |
|---|---|---|---|
| 1EA | MORTISE CYLINDER | 20-013 | 612 SCH |
| 1EA | HARDWARE | HDW BY DOOR SUPPLIER / TESTED ASSEMBLY | B/O |

BLAST DOOR AND FRAME ASSEMBLY

HW SET: 02

| Each SINGLE DOOR To Have: | | | NON-RTD |
|---|---|---|---|
| 3EA | HINGE | BB1279 4.5 X 4.5 | 612 HAG |
| 1SET | PUSH-PULL BAR | 11147 X DEC. CAP | 612 ROC |
| 1EA | SURFACE CLOSER | 4110 EDA X TB | 691 LCN |
| 1EA | MOUNTING PLATE | 4110-18 | 691 LCN |
| 1EA | CUSH SHOE SUPPORT | 4110-30 | 691 LCN |
| 1EA | BLADE STOP SPACER | 4110-61 | 691 LCN |
| 1EA | WALL BUMPER | 406 | 612 ROC |

HW SET: 03

| Each SINGLE DOOR To Have: | | | NON-RTD |
|---|---|---|---|
| 3EA | HINGE | BB1279 4.5 X 4.5 | 612 HAG |
| 1EA | ENTRANCE LOCK | AL53PD SAT | 612 SCH |
| 1EA | WALL BUMPER | 409 | 612 ROC |

HW SET: 04

| Each SINGLE DOOR To Have: | | | NON-RTD |
|---|---|---|---|
| 3EA | HINGE | BB1279 4.5 X 4.5 | 612 HAG |
| 1EA | STOREROOM LOCK | AL80PD SAT | 612 SCH |
| 1EA | WALL BUMPER | 406 | 612 ROC |

HW SET: 05

| Each SINGLE DOOR To Have: | | | NON-RTD |
|---|---|---|---|
| 3EA | HINGE | BB1279 4.5 X 4.5 | 612 HAG |
| 1EA | PRIVACY SET | AL40S SAT | 612 SCH |
| 1EA | WALL BUMPER | 409 | 612 ROC |

HW SET: 06

| Each SINGLE DOOR To Have: | | | NON-RTD |
|---|---|---|---|
| 3EA | HINGE | BB1279 4.5 X 4.5 | 612 HAG |
| 1EA | PRIVACY SET | AL40S SAT | 612 SCH |
| 1EA | KICK PLATE | K1050 8" X 34" | 612 ROC |
| 1EA | WALL BUMPER | 409 | 612 ROC |

HW SET: 07

| Each SINGLE DOOR To Have: | | | NON-RTD |
|---|---|---|---|
| 3EA | HINGE | BB1279 4.5 X 4.5 | 612 HAG |
| 1EA | CLASSROOM LOCK | AL70PD SAT | 612 SCH |
| 1EA | KICK PLATE | K1050 8" X 34" | 612 ROC |
| 1EA | WALL BUMPER | 406 | 612 ROC |

HW SET: 08

| Each SINGLE DOOR To Have: | | | NON-RTD |
|---|---|---|---|
| 3EA | HINGE | BB1279 4.5 X 4.5 | 612 HAG |
| 1EA | PULL PLATES | 110 X 70C 4" X 16" | 612 ROC |
| 1EA | PUSH PLATES | 70C 4" X 16" | 612 ROC |
| 1EA | SURFACE CLOSER | 4010 X TB | 689 LCN |
| 1EA | KICK PLATE | K1050 8" X 34" | 612 ROC |
| 1EA | WALL BUMPER | 406 | 612 ROC |

HW SET: 09

| Each DOUBLE ACTING DOOR To Have: | | | NON-RTD |
|---|---|---|---|
| 1EA | FLOOR CLOSER | 5025 X BC | 612 RIX |
| 2EA | PUSH PLATES | 70C 4" X 16" | 612 ROC |
| 2EA | ARMOR PLATE | K1050 48" X 46" | 612 ROC |
| 2EA | WALL BUMPER | 406 | 612 ROC |

HW SET: 10

| Each SINGLE DOOR To Have: | | | NON-RTD |
|---|---|---|---|
| 3EA | HINGE | BB1279 4.5 X 4.5 | 612 HAG |
| 1EA | CLASSROOM LOCK | AL70PD SAT | 612 SCH |
| 1EA | KICK PLATE | K1050 16" X 34" | 612 ROC |
| 1EA | WALL BUMPER | 406 | 612 ROC |

HW SET: 11

| Each SINGLE DOOR To Have: | | | NON-RTD |
|---|---|---|---|
| 3EA | HINGE | BB1279 4.5 X 4.5 | 612 HAG |
| 1EA | CORE ONLY | 23-030 | 606 SCH |
| 1EA | SIMPLEX LOCK | L1021S-41 | 609 SIM |
| 1EA | SURFACE CLOSER | 4010 X TB | 689 LCN |
| 1EA | KICK PLATE | K1050 8" X 34" | 612 ROC |
| 1EA | WALL BUMPER | 406 | 612 ROC |

HW SET: 12

| Each BI-FOLDING DOORS To Have: | | | NON-RTD |
|---|---|---|---|
| 1SET | BIFOLD ASSEMBLY 100FD4DR | | JOH |
| 2EA | WIRE PULL 856 | | 626 ROC |

HW SET: 13

| Each SLIDING DOOR To Have: | | | NON-RTD |
|---|---|---|---|
| 1SET | SLIDING DOOR TRACK | FLAT TRACK W/MOUNTING POSTS | COB |
| 2EA | HANGERS | HANGERS W SQUARE END | COB |
| 2EA | FLOOR GUIDE | FLOOR GUIDES | COB |
| 1SET | FLUSH PULL | 94P X 94L | 612 ROC |

HW SET: 14

| Each SINGLE DOOR To Have: | | | NON-RTD |
|---|---|---|---|
| 3EA | HINGE | BB1279 4.5 X 4.5 | 612 HAG |
| 1EA | PULL PLATES | 110 X 70C 4" X 16" | 612 ROC |
| 1EA | PUSH PLATES | 70C 4" X 16" | 612 ROC |
| 1EA | SURFACE CLOSER | 4110 EDA X TB | 691 LCN |
| 1EA | KICK PLATE | K1050 8" X 34" | 612 ROC |
| 1EA | WALL BUMPER | 406 | 612 ROC |

HW SET: 15

| Each PAIR OF DOORS To Have: | | | NON-RTD |
|---|---|---|---|
| 6EA | HINGE | BB1279 4.5 X 4.5 | 612 HAG |
| 2EA | FLUSH BOLT | 555 | 612 ROC |
| 1EA | DUST PROOF STRIKE | 570 | 612 ROC |
| 1EA | STOREROOM LOCK | AL80PD SAT | 612 SCH |
| 1EA | ASTRAGAL | ASTRAGAL BY DOOR SUPPLIER | 600 B/O |
| 2EA | OVERHEAD STOP | 900S | 612 GLY |
| 2EA | KICK PLATE | K1050 8" X 34" | 612 ROC |
| 1SET | SEALS | 160S 1/72" 2/84" | AL NGP |
| 2EA | DOOR SWEEP | 200NA 36" | AL NGP |
| 1EA | THRESHOLD | 425 72" | AL NGP |

HW SET: 16

| Each SINGLE DOOR To Have: | | | NON-RTD |
|---|---|---|---|
| 1EA | RIM CYLINDER | 20-022 | 612 SCH |
| 1EA | HARDWARE | HDW BY DOOR SUPPLIER / TESTED | B/O |

BLAST DOOR AND FRAME ASSEMBLY

**END OF SECTION 087100**

**SECTION 088000 - GLAZING**

PART 1 - GENERAL

1.1 RELATED DOCUMENTS

A. Drawings and general provisions of the Contract, including General and Supplementary Conditions and Division 01 Specification Sections, apply to this Section.

1.2 SUMMARY

A. Section includes blast resistant and standard glazing for the following products and applications, including those specified in other Sections where glazing requirements are specified by reference to this Section:

1. Windows.
2. Doors.
3. Storefront framing.

B. Related Sections:

1. Division 07 “Sealants”.
2. Division 08 Section "Hollow Metal Doors and Frames."
3. Division 08 Section "Aluminum Windows."
4. Division 08 Section "Aluminum Entrances" .
5. Division 08 Section "Mirrors."

1.3 REFERENCES:

A. ASTM International.

1. ASTM F 1642: Standard Method for Glazing and Glazing Systems Subjected to Airblast Loadings.

B. Unified Facilities Criteria (UFC).

1. UFC 1-200-01: General Building Requirements.
2. UFC 3-310-01: Design: Structural Load Data.
3. UFC 4-010-01: DoD Minimum Antiterrorism Standards for Buildings.

1.4 DEFINITIONS

A. Glass Manufacturers: Firms that produce primary glass, fabricated glass, or both, as defined in referenced glazing publications.

B. Glass Thicknesses: Indicated by thickness designations in millimeters according to ASTM C 1036.

C. Interspace: Space between lites of an insulating-glass unit.

1.5 PERFORMANCE REQUIREMENTS

A. General: Installed glazing systems shall withstand normal thermal movement and wind and impact loads (where applicable) without failure, including loss or glass breakage attributable to the following: defective manufacture, fabrication, or installation; failure of sealants or gaskets to remain watertight and airtight; deterioration of glazing materials; or other defects in construction.

B. Delegated Design: Design glass, including comprehensive engineering analysis according to ASTM E 1300 by a qualified professional engineer, using the following design criteria:

1. Design Wind Pressures: Determine design wind pressures applicable to Project according to ASCE/SEI 7, based on heights above grade indicated on Drawings.

a. Basic Wind Speed: 90 mph .

2. Vertical Glazing: For glass surfaces sloped 15 degrees or less from vertical, design glass to resist design wind pressure based on glass type factors for short-duration load.
3. Maximum Lateral Deflection: For glass supported on all four edges, limit center-of-glass deflection at design wind pressure to not more than 1/50 times the short-side length or 1 inch, whichever is less.
4. Differential Shading: Design glass to resist thermal stresses induced by differential shading within individual glass lites.

C. Thermal Movements: Allow for thermal movements from ambient and surface temperature changes acting on glass framing members and glazing components.

1. Temperature Change: 120 deg F, ambient; 180 deg F, material surfaces.

D. Glazing and Glazing Systems Subjected to Airblast Loadings:
1. The test specimen shall be tested in accordance with ASTM F 1642. The test specimen shall receive a minimum of a “Low Level of Protection” per UFC 4-010-01.

E. Blast Mitigation: Provide system designed to meet or exceed the following requirements of the UFC 4-010-01 (8 October, 2003), “DoD Minimum Antiterrorism Standard for Buildings.”
1. Section B-3.1 Standard 10 Windows, Skylights, and Glazed Doors.
a. To minimize hazards from flying glass fragments, apply the provisions for glazing and window, skylight, and glazed door frames below for all new and existing inhabited buildings covered by these standards. Glazing and frames must work as a system to ensure that their hazard mitigation is effective. These provisions apply even if the minimum standoff distances are met. The specific requirements below, provided conventional standoff distances are met, will result in windows, skylights, and glazed doors that comply with this standard for windows provided their visual glazing openings do not exceed 3 square meters (32 square feet).
2. Section B-3.1.1 Glazing .
a. Use minimum of 6-mm (1/4-in) nominal laminated glass for all exterior windows, skylights, and glazed doors. The 6-mm (1/4-in) laminated glass consists of two nominal 3-mm (1/8-in) glass panes bonded together with a minimum of a 0.75-mm (0.030-inch) polyvinyl-butyal (PVB) interlayer. For insulated glass units, use 6-mm (1/4-inch) laminated glass inner pane as a minimum.
3. Section B-3.1.2.1 Frame Member Design.
a. Steel members may be designed using ultimate yield stresses and aluminum members may be designed based on a 0.2% offset yield strength. Equivalent static design loads for the window, skylight, and door members shall be 7 kilopascals (1 lb per square in) applied to the surface of the glazing and frame. Deformations shall not exceed 1/60 of the unsupported member lengths.
4. Section B-3.1.2.2 Glazing Frame Bite.

a. The glazing shall have a minimum frame bite of 9.5-mm (3/8-in) for structurally glazed systems and 25-mm (1-in) for window systems that are not structurally glazed.

5. Section B-3.1.2.2 Connection Design.
   a. Equivalent static design loads for connections of the window, skylight, or door frame to the surrounding walls or roof, hardware and associated connections, and glazing stop connections shall be 75 kilopascals (10.8 lbs per square inch) for glazing panels with a vision area less than or equal to 1.0 square meters (10.8 square feet) and 30 kilopascals (4.4 lbs per square inch) for glazing panels with a vision area greater than 1.0 square meters (10.8 square feet) but less than or equal to 3.0 square meters (32 square feet). Loads shall be applied to the surface of the glazing and frame. Connections and hardware may be designed based on ultimate strength for steel and 0.2% offset yield strength for aluminum.
6. Section B-3.3 Standard 12 Exterior Doors.
   a. For all new and existing buildings covered by these standards, ensure that all exterior doors into inhabited areas open outwards. By doing so, the doors will seat into the door frames in response to an explosive blast, increasing the likelihood that the doors will not enter the buildings as hazardous debris. Alternatively, position doors such that they will not be propelled into rooms if they fail in response to a blast or provide other means to ensure they do not become hazards to building occupants.

## 1.6 SUBMITTALS

A. Product Data: For each glass product and glazing material indicated.

B. Glass Samples: For each type of; 12 inches square.

1. Coated
2. Laminated glass with colored interlayer.
3. Insulating glass.

C. Product Certificates: For glass and glazing products, from manufacturer.

## 1.7 QUALITY ASSURANCE

A. Manufacturer Qualifications for Insulating-Glass Units with Sputter-Coated, Low-E Coatings: A qualified insulating-glass manufacturer who is approved and certified by coated-glass manufacturer.

B. Installer Qualifications: A qualified installer who employs glass installers for this Project who are certified under the National Glass Association's Certified Glass Installer Program.

C. Glass Testing Agency Qualifications: A qualified independent testing agency accredited according to the NFRC CAP 1 Certification Agency Program.

D. Source Limitations for Glass: Obtain laminated glass and insulating glass from single source from single manufacturer for each glass type.

E. Source Limitations for Glazing Accessories: Obtain from single source from single manufacturer for each product and installation method.

F. Glazing Publications: Comply with published recommendations of glass product manufacturers and organizations below, unless more stringent requirements are indicated. Refer to these publications for glazing terms not otherwise defined in this Section or in referenced standards.

1. GANA Publications: GANA's "Laminated Glazing Reference Manual" and GANA's "Glazing Manual."
2. IGMA Publication for Insulating Glass: SIGMA TM-3000, "North American Glazing Guidelines for Sealed Insulating Glass Units for Commercial and Residential Use."

G. Safety Glazing Labeling: Where safety glazing labeling is indicated, permanently mark glazing with certification label of the SGCC or another certification agency acceptable the manufacturer. Label shall indicate manufacturer's name, type of glass, thickness, and safety glazing standard with which glass complies.

H. Insulating-Glass Certification Program: Permanently marked either on spacers or on at least one component lite of units with appropriate certification label of IGCC.

## 1.8 DELIVERY, STORAGE, AND HANDLING

A. Protect glazing materials according to manufacturer's written instructions. Prevent damage to glass and glazing materials from condensation, temperature changes, direct exposure to sun, or other causes.

B. Comply with insulating-glass manufacturer's written recommendations for venting and sealing units to avoid hermetic seal ruptures due to altitude change.

## 1.9 PROJECT CONDITIONS

A. Environmental Limitations: Do not proceed with glazing when ambient and substrate temperature conditions are outside limits permitted by glazing material manufacturers and when glazing channel substrates are wet from rain, frost, condensation, or other causes.

1. Do not install glazing sealants when ambient and substrate temperature conditions are outside limits permitted by sealant manufacturer or below 40 deg F.

## 1.10 WARRANTY

A. Manufacturer's Special Warranty for Coated-Glass Products: Manufacturer's standard form in which coated-glass manufacturer agrees to replace coated-glass units that deteriorate within specified warranty period. Deterioration of coated glass is defined as defects developed from normal use that are not attributed to glass breakage or to maintaining and cleaning coated glass contrary to manufacturer's written instructions. Defects include peeling, cracking, and other indications of deterioration in coating.

1. Warranty Period: 5 years from date of Substantial Completion.

B. Manufacturer's Special Warranty on Laminated Glass: Manufacturer's standard form in which laminated-glass manufacturer agrees to replace laminated-glass units that deteriorate within specified warranty period. Deterioration of laminated glass is defined as defects developed from normal use that are not attributed to glass breakage or to maintaining and cleaning laminated glass contrary to manufacturer's written instructions. Defects include edge separation, delamination materially obstructing vision through glass, and blemishes exceeding those allowed by referenced laminated-glass standard.

1. Warranty Period: Five years from date of Substantial Completion.

C. Manufacturer's Special Warranty on Insulating Glass: Manufacturer's standard form in which insulating-glass manufacturer agrees to replace insulating-glass units that deteriorate within specified warranty period. Deterioration of insulating glass is defined as failure of hermetic seal under normal use that is not

attributed to glass breakage or to maintaining and cleaning insulating glass contrary to manufacturer's written instructions. Evidence of failure is the obstruction of vision by dust, moisture, or film on interior surfaces of glass.

1. Warranty Period: 5 years from date of Substantial Completion.

## PART 2 - PRODUCTS

### 2.1 GLASS PRODUCTS, GENERAL

A. Thickness: Where glass thickness is indicated, it is a minimum. Provide glass lites in thicknesses as needed to comply with requirements indicated.

1. Minimum Glass Thickness for Exterior Lites: Not less than 6.0 mm.

B. Strength: Where float glass is indicated, provide annealed float glass, Kind HS heat-treated float glass, or Kind FT heat-treated float glass as needed to comply with "Performance Requirements" Article. Where heat-strengthened glass is indicated, provide Kind HS heat-treated float glass or Kind FT heat-treated float glass as needed to comply with "Performance Requirements" Article. Where fully tempered glass is indicated, provide Kind FT heat-treated float glass.

C. Thermal and Optical Performance Properties: Provide glass with performance properties specified, as indicated in manufacturer's published test data, based on procedures indicated below:

1. For monolithic-glass lites, properties are based on units with lites 6.0 mm thick.
2. For laminated-glass lites, properties are based on products of construction indicated.
3. For insulating-glass units, properties are based on units of thickness indicated for overall unit and for each lite.
4. U-Factors: Center-of-glazing values, according to NFRC 100 and based on LBL's WINDOW 5.2 computer program, expressed as Btu/sq. ft. x h x deg F.
5. Solar Heat-Gain Coefficient and Visible Transmittance: Center-of-glazing values, according to NFRC 200 and based on LBL's WINDOW 5.2 computer program.
6. Visible Reflectance: Center-of-glazing values, according to NFRC 300.

### 2.2 GLASS PRODUCTS

A. Float Glass: ASTM C 1036, Type I, Quality-Q3, Class I (clear) unless otherwise indicated.

B. Heat-Treated Float Glass: ASTM C 1048; Type I; Quality-Q3; Class I (clear) unless otherwise indicated; of kind and condition indicated.

1. Fabrication Process: By horizontal (roller-hearth) process with roll-wave distortion parallel to bottom edge of glass as installed unless otherwise indicated.
2. For uncoated glass, comply with requirements for Condition A.
3. For coated vision glass, comply with requirements for Condition C (other coated glass).

C. Products: Subject to compliance with requirements, available products that may be incorporated into the Work include, but are not limited to, the following:

a. Pilkington, North America.
b. PPG Industries Inc.
c. AFG Industries.

d. Guardian Industries.
e. Vericon
f. Dupont, “Sentry Glas”.

2.3 LAMINATED GLASS

A. Manufacturers: Subject to compliance with requirements, available manufacturers offering products that may be incorporated into the Work include, but are not limited to, the following:

a. Pilkington, North America.
b. PPG Industries Inc.
c. AFG Industries.
d. Guardian Industries.
e. Vericon.
f. Dupont, “Sentry Glas”.

B. Laminated Glass: ASTM C 1172, and complying with testing requirements in 16 CFR 1201 for Category II materials, and with other requirements specified. Use materials that have a proven record of no tendency to bubble, discolor, or lose physical and mechanical properties after fabrication and installation.

1. Construction: Laminate glass with polyvinyl butyral interlayer or cast-in-place and cured-transparent-resin interlayer to comply with interlayer manufacturer's written recommendations.
2. Interlayer Thickness: Provide thickness not less than that indicated and as needed to comply with requirements.
3. Interlayer Color: Clear unless otherwise indicated.

C. Windborne-Debris-Impact-Resistant Laminated Glass: ASTM C 1172, and complying with testing requirements in 16 CFR 1201 for Category II materials, with "Windborne-Debris-Impact Resistance" Paragraph in "Glass Products, General" Article, and with other requirements specified. Use materials that have a proven record of no tendency to bubble, discolor, or lose physical and mechanical properties after fabrication and installation.

1. Construction: Laminate glass with one of the following to comply with interlayer manufacturer's written recommendations:

a. Polyvinyl butyral interlayer.
b. Polyvinyl butyral interlayers reinforced with polyethylene terephthalate film.
c. Ionoplast interlayer.
d. Cast-in-place and cured-transparent-resin interlayer.
e. Cast-in-place and cured-transparent-resin interlayer reinforced with polyethylene terephthalate film.

2. Interlayer Thickness: Provide thickness not less than that indicated and as needed to comply with requirements.
3. Interlayer Color: Clear unless otherwise indicated.

D. Glass: Comply with applicable requirements in "Glass Products" Article as indicated by designations in "Laminated-Glass Types" Article.

## 2.4 INSULATING GLASS

A. Manufacturers: Subject to compliance with requirements, available manufacturers offering products that may be incorporated into the Work include, but are not limited to, the following:

a. Pilkington, North America.
b. PPG Industries Inc.
c. AFG Industries.
d. Guardian Industries.
e. Vericon.
f. Dupont, “Sentry Glas”..

B. Insulating-Glass Units: Factory-assembled units consisting of sealed lites of glass separated by a dehydrated interspace, qualified according to ASTM E 2190, and complying with other requirements specified.

1. Sealing System: Dual seal, with manufacturer's standard primary and secondary.
2. Spacer: Manufacturer's standard spacer material and construction.
3. Desiccant: Molecular sieve or silica gel, or blend of both.

C. Glass: Comply with applicable requirements in "Glass Products" Article and in "Laminated Glass" Article as indicated by designations in "Insulating-Glass Types" Article and in "Insulating-Laminated-Glass Types" Article.

## 2.5 GLAZING SEALANTS

A. General:

1. Compatibility: Provide glazing sealants that are compatible with one another and with other materials they will contact, including glass products, seals of insulating-glass units, and glazing channel substrates, under conditions of service and application, as demonstrated by sealant manufacturer based on testing and field experience.
2. Suitability: Comply with sealant and glass manufacturers' written instructions for selecting glazing sealants suitable for applications indicated and for conditions existing at time of installation.

B. Glazing Sealant: Neutral-curing silicone glazing sealant complying with ASTM C 920, Type S, Grade NS, Class 50, Use NT.

1. Products: Subject to compliance with requirements, available products that may be incorporated into the Work include, but are not limited to, the following:

a. Dow Corning Corporation; 756 SMS.
b. Sika Corporation, Construction Products Division; SikaSil-C995.

## 2.6 MISCELLANEOUS GLAZING MATERIALS

A. General: Provide products of material, size, and shape complying with referenced glazing standard, requirements of manufacturers of glass and other glazing materials for application indicated, and with a proven record of compatibility with surfaces contacted in installation.

B. Cleaners, Primers, and Sealers: Types recommended by sealant or gasket manufacturer.

C. Setting Blocks: Elastomeric material with a Shore, Type A durometer hardness of 85, plus or minus 5.

D. Spacers: Elastomeric blocks or continuous extrusions of hardness required by glass manufacturer to maintain glass lites in place for installation indicated.

E. Edge Blocks: Elastomeric material of hardness needed to limit glass lateral movement (side walking).

F. Cylindrical Glazing Sealant Backing: ASTM C 1330, Type O (open-cell material), of size and density to control glazing sealant depth and otherwise produce optimum glazing sealant performance.

G. Perimeter Insulation for Fire-Resistive Glazing: Product that is approved by testing agency that listed and labeled fire-resistant glazing product with which it is used for application and fire-protection rating indicated.

2.7 FABRICATION OF GLAZING UNITS

A. Fabricate glazing units in sizes required to fit openings indicated for Project, with edge and face clearances, edge and surface conditions, and bite complying with written instructions of product manufacturer and referenced glazing publications, to comply with system performance requirements.

B. Clean-cut or flat-grind vertical edges of butt-glazed monolithic lites to produce square edges with slight chamfers at junctions of edges and faces.

C. Grind smooth and polish exposed glass edges and corners.

2.8 MONOLITHIC-GLASS TYPES

A. Glass Type : Clear fully tempered float glass.

1. Thickness: 6.0 mm.
2. Provide safety glazing labeling.

2.9 INSULATING-LAMINATED-GLASS TYPES

A. Glass Type : Low-e-coated, clear insulating laminated glass.

1. Overall Unit Thickness: 1 inch.
2. Thickness of Outdoor Lite: 6.0 mm .
3. Outdoor Lite: Heat-strengthened float glass.
4. Interspace Content: Argon.
5. Indoor Lite: Clear laminated glass with two plies of heat-strengthened float glass.

   a. Thickness of Each Glass Ply: 3.0 mm.

6. Low-E Coating: Pyrolytic on second.
7. Provide safety glazing labeling.

PART 3 - EXECUTION

## 3.1 EXAMINATION

A. Examine framing, glazing channels, and stops, with Installer present, for compliance with the following:

1. Manufacturing and installation tolerances, including those for size, squareness, and offsets at corners.
2. Presence and functioning of weep systems.
3. Minimum required face and edge clearances.
4. Effective sealing between joints of glass-framing members.

B. Proceed with installation only after unsatisfactory conditions have been corrected.

## 3.2 PREPARATION

A. Clean glazing channels and other framing members receiving glass immediately before glazing. Remove coatings not firmly bonded to substrates.

B. Examine glazing units to locate exterior and interior surfaces. Label or mark units as needed so that exterior and interior surfaces are readily identifiable. Do not use materials that will leave visible marks in the completed work.

## 3.3 GLAZING, GENERAL

A. Comply with combined written instructions of manufacturers of glass, sealants, gaskets, and other glazing materials, unless more stringent requirements are indicated, including those in referenced glazing publications.

B. Adjust glazing channel dimensions as required by Project conditions during installation to provide necessary bite on glass, minimum edge and face clearances, and adequate sealant thicknesses, with reasonable tolerances.

C. Protect glass edges from damage during handling and installation. Remove damaged glass from Project site and legally dispose of off Project site. Damaged glass is glass with edge damage or other imperfections that, when installed, could weaken glass and impair performance and appearance.

D. Apply primers to joint surfaces where required for adhesion of sealants, as determined by preconstruction testing.

E. Install setting blocks in sill rabbets, sized and located to comply with referenced glazing publications, unless otherwise required by glass manufacturer. Set blocks in thin course of compatible sealant suitable for heel bead.

F. Do not exceed edge pressures stipulated by glass manufacturers for installing glass lites.

G. Provide spacers for glass lites where length plus width is larger than 50 inches.

1. Locate spacers directly opposite each other on both inside and outside faces of glass. Install correct size and spacing to preserve required face clearances, unless gaskets and glazing tapes are used that have demonstrated ability to maintain required face clearances and to comply with system performance requirements.
2. Provide 1/8-inch minimum bite of spacers on glass and use thickness equal to sealant width. With glazing tape, use thickness slightly less than final compressed thickness of tape.

H. Provide edge blocking where indicated or needed to prevent glass lites from moving sideways in glazing channel, as recommended in writing by glass manufacturer and according to requirements in referenced glazing publications.

I. Set glass lites in each series with uniform pattern, draw, bow, and similar characteristics.

J. Set glass lites with proper orientation so that coatings face exterior or interior as specified.

K. Where wedge-shaped gaskets are driven into one side of channel to pressurize sealant or gasket on opposite side, provide adequate anchorage so gasket cannot walk out when installation is subjected to movement.

L. Square cut wedge-shaped gaskets at corners and install gaskets in a manner recommended by gasket manufacturer to prevent corners from pulling away; seal corner joints and butt joints with sealant recommended by gasket manufacturer.

3.4 SEALANT GLAZING (WET)

A. Install continuous spacers, or spacers combined with cylindrical sealant backing, between glass lites and glazing stops to maintain glass face clearances and to prevent sealant from extruding into glass channel and blocking weep systems until sealants cure. Secure spacers or spacers and backings in place and in position to control depth of installed sealant relative to edge clearance for optimum sealant performance.

B. Force sealants into glazing channels to eliminate voids and to ensure complete wetting or bond of sealant to glass and channel surfaces.

C. Tool exposed surfaces of sealants to provide a substantial wash away from glass.

3.5 CLEANING AND PROTECTION

A. Protect exterior glass from damage immediately after installation by attaching crossed streamers to framing held away from glass. Do not apply markers to glass surface. Remove nonpermanent labels and clean surfaces.

B. Protect glass from contact with contaminating substances resulting from construction operations. If, despite such protection, contaminating substances do come into contact with glass, remove substances immediately as recommended in writing by glass manufacturer.

C. Examine glass surfaces adjacent to or below exterior concrete and other masonry surfaces at frequent intervals during construction, but not less than once a month, for buildup of dirt, scum, alkaline deposits, or stains; remove as recommended in writing by glass manufacturer.

D. Remove and replace glass that is broken, chipped, cracked, or abraded or that is damaged from natural causes, accidents, and vandalism, during construction period.

E. Wash glass on both exposed surfaces in each area of Project not more than four days before date scheduled for inspections that establish date of Substantial Completion. Wash glass as recommended in writing by glass manufacturer.

**END OF SECTION 088000**

**SECTION 088300 - MIRRORS**

PART 1 - GENERAL

1.1 RELATED DOCUMENTS

A. Drawings and general provisions of the Contract, including General and Supplementary Conditions and Division 01 Specification Sections, apply to this Section.

1.2 SUMMARY

A. This Section includes the following types of silvered flat glass mirrors.

1. Annealed monolithic glass mirrors.

B. Related Sections include the following:

1. Division 08 Section "Glazing" for glass with reflective coatings used for vision and spandrel lites.
2. Division 10 Section "Toilet, Bath, and Laundry Accessories" for metal-framed mirrors.

1.3 DEFINITIONS

A. Deterioration of Mirrors: Defects developed from normal use that are attributable to the manufacturing process and not to causes other than glass breakage and practices for maintaining and cleaning mirrors contrary to mirror manufacturer's written instructions. Defects include discoloration, black spots, and clouding of the silver film.

1.4 PERFORMANCE REQUIREMENTS

A. Provide mirrors that will not fail under normal usage. Failure includes glass breakage and deterioration attributable to defective manufacture, fabrication, and installation.

1.5 SUBMITTALS

A. Product Data: For the following:

1. Mirrors. Include description of materials and process used to produce each type of silvered flat glass mirror specified that indicates sources of glass, glass coating components, edge sealer, and quality-control provisions.
2. Mirror mastic.
3. Mirror hardware.

B. Mirror Mastic Compatibility Test Reports: From mirror manufacturer indicating that mirror mastic was tested for compatibility and adhesion with mirror backing and substrates on which mirrors are installed.

C. Warranty: Special warranty specified in this Section.

1.6 QUALITY ASSURANCE

A. Installer Qualifications: An experienced installer who has completed mirror glazing similar in material, design, and extent to that indicated for this Project; whose work has resulted in mirror installations with a record of successful in-service performance; and who employs glass installers for this Project who are certified under NGA's Glazier Certification Program as Level 2 (Senior Glaziers) or Level 3 (Master Glaziers).

B. Source Limitations for Mirrors: Obtain mirrors from one source for each type of mirror indicated.

C. Source Limitations for Mirror Glazing Accessories: Obtain mirror glazing accessories from one source for each type of accessory indicated.

D. Glazing Publications: Comply with the following published recommendations:

1. GANA's "Glazing Manual" unless more stringent requirements are indicated. Refer to this publication for definitions of glass and glazing terms not otherwise defined in this Section or in referenced standards.
2. GANA Mirror Division's "Mirrors, Handle with Extreme Care: Tips for the Professional on the Care and Handling of Mirrors."

1.7 DELIVERY, STORAGE, AND HANDLING

A. Protect mirrors according to mirror manufacturer's written instructions and as needed to prevent damage to mirrors from condensation, temperature changes, direct exposure to sun, or other causes.

B. Comply with mirror manufacturer's written instructions for shipping, storing, and handling mirrors as needed to prevent deterioration of silvering, damage to edges, and abrasion of glass surfaces and applied coatings. Store indoors, protected from moisture including condensation.

1.8 PROJECT CONDITIONS

A. Environmental Limitations: Do not install mirrors until ambient temperature and humidity conditions are maintained at levels indicated for final occupancy.

1.9 WARRANTY

A. Special Warranty: Manufacturer's standard form, made out to Owner and signed by mirror manufacturer agreeing to replace mirrors that deteriorate as defined in "Definitions" Article, f.o.b. the nearest shipping point to Project site, within specified warranty period indicated below:

1. Warranty Period: Five years from date of Substantial Completion.

PART 2 - PRODUCTS

2.1 MANUFACTURERS

A. Available Manufacturers: Subject to compliance with requirements, manufacturers offering mirrors that may be incorporated into the Work include, but are not limited to, the following:

1. Gilded Mirrors, Inc.
2. Guardian Industries Corp.
3. Independent Mirror Industries, Inc.
4. Messer Industries, Inc.
5. Sunshine Mirror.

2.2 SILVERED FLAT GLASS MIRROR MATERIALS

A. Clear Glass Mirrors: ASTM C 1503, Mirror Select Quality.

1. Nominal Thickness: 6.0 mm .

2.3 MISCELLANEOUS MATERIALS

A. Edge Sealer: Coating compatible with glass coating and approved by mirror manufacturer for use in protecting against silver deterioration at mirrored glass edges.

B. Mirror Mastic: An adhesive setting compound, produced specifically for setting mirrors and certified by both mirror manufacturer and mastic manufacturer as compatible with glass coating and substrates on which mirrors will be installed.

1. Available Manufacturers: Subject to compliance with requirements, manufacturers offering products that may be incorporated into the Work include, but are not limited to, the following:

a. Gunther Mirror Mastics.
b. Palmer Products Corporation.

2.4 FABRICATION

A. Mirror Sizes: To suit Project conditions,cut mirrors to final sizes and shapes.

B. Cutouts: Fabricate cutoutsfor notches and holes in mirrors without marring visible surfaces. Locate and size cutouts so they fit closely around penetrations in mirrors.

C. Mirror Edge Treatment: Rounded polished edge.

1. Seal edges of mirrors after edge treatment to prevent chemical or atmospheric penetration of glass coating.
2. Require mirror manufacturer to perform edge treatment and sealing in factory immediately after cutting to final sizes.

PART 3 - EXECUTION

3.1 EXAMINATION

A. Examine substrates, over which mirrors are to be mounted, with Installer present, for compliance with installation tolerances, substrate preparation, and other conditions affecting performance.

1. Verify compatibility with and suitability of substrates, including compatibility of mirror mastic with existing finishes or primers.

2. Proceed with mirror installation only after unsatisfactory conditions have been corrected and surfaces are dry.

3.2 PREPARATION

A. Comply with mastic manufacturer's written installation instructions for preparation of substrates, including coating surfaces with mastic manufacturer's special bond coating where applicable.

3.3 INSTALLATION

A. General: Install mirrors to comply with mirror manufacturer's written instructions and with referenced GANA publications. Mount mirrors accurately in place in a manner that avoids distorting reflected images.

B. Provide a minimum air space of 1/8 inch between back of mirrors and mounting surface for air circulation between back of mirrors and face of mounting surface.

C. For wall-mounted mirrors, install mirrors with mastic.

1. Install mastic as follows:

a. Apply barrier coat to mirror backing where approved in writing by manufacturers of mirrors and backing material.
b. Apply mastic to comply with mastic manufacturer's written instructions for coverage and to allow air circulation between back of mirrors and face of mounting surface.
c. After mastic is applied, align mirrors and press into place while maintaining a minimum air space of 1/8 inch (3 mm) between back of mirrors and mounting surface.
d. Provide temporary bracing and supports to maintain alignment during the curing process of the mastic for the recommended time period of the mastic manufacturer.

3.4 CLEANING AND PROTECTION

A. Protect mirrors from breakage and contaminating substances resulting from construction operations.

B. Do not permit edges of mirrors to be exposed to standing water.

C. Maintain environmental conditions that will prevent mirrors from being exposed to moisture from condensation or other sources for continuous periods of time.

**END OF SECTION 088300**

**SECTION 092216 - NON-STRUCTURAL METAL FRAMING**

PART 1 - GENERAL

1.1 RELATED DOCUMENTS

A. Drawings and general provisions of the Contract, including General and Supplementary Conditions and Division 01 Specification Sections, apply to this Section.

1.2 SUMMARY

A. This Section includes non-load-bearing steel framing members for the following applications:

1. Interior framing systems (e.g., supports for partition walls, framed soffits, furring, etc.).
2. Interior suspension systems (e.g., supports for ceilings, suspended soffits, etc.).

B. Related Sections include the following:

1. Division 06 Section "Rough Carpentry" for blocking; roof rafters and ceiling joists; and roof trusses.
2. Division 07 Section "Thermal Insulation" for insulation installed with Z-shaped furring members.
3. Division 07 Section " Joint Systems" .
4. Division 09 Section "Gypsum Board ".

1.3 SUBMITTALS

A. Product Data: For each type of product indicated.

1.4 QUALITY ASSURANCE

A. Fire-Test-Response Characteristics: For fire-resistance-rated assemblies that incorporate non-load-bearing steel framing, provide materials and construction identical to those tested in assembly indicated according to ASTM E 119 by an independent testing agency.

B. STC-Rated Assemblies: For STC-rated assemblies, provide materials and construction identical to those tested in assembly indicated according to ASTM E 90 and classified according to ASTM E 413 by an independent testing agency.

PART 2 - PRODUCTS

2.1 NON-LOAD-BEARING STEEL FRAMING, GENERAL

A. Framing Members, General: Comply with ASTM C 754 for conditions indicated.

1. Steel Sheet Components: Comply with ASTM C 645 requirements for metal, unless otherwise indicated.
2. Protective Coating: ASTM A 653/A 653M, G60 , hot-dip galvanized, unless otherwise indicated.

2.2 SUSPENSION SYSTEM COMPONENTS

A. Tie Wire: ASTM A 641/A 641M, Class 1 zinc coating, soft temper, 0.0625-inch diameter wire.

B. Hanger Attachments to Concrete:

1. Anchors: Fabricated from corrosion-resistant materials with holes or loops for attaching wire hangers and capable of sustaining, without failure, a load equal to 5 times that imposed by construction as determined by testing according to ASTM E 488 by an independent testing agency.

a. Type: Postinstalled, chemical anchor, Postinstalled, expansion anchor.

2. Powder-Actuated Fasteners: Suitable for application indicated, fabricated from corrosion-resistant materials with clips or other devices for attaching hangers of type indicated, and capable of sustaining, without failure, a load equal to 10 times that imposed by construction as determined by testing according to ASTM E 1190 by an independent testing agency.

C. Wire Hangers: ASTM A 641/A 641M, Class 1 zinc coating, soft temper, 0.162-inch diameter.

D. Carrying Channels: Cold-rolled, commercial-steel sheet with a base-metal thickness of 0.0538 inch and minimum 1/2-inch wide flanges.

1. Depth: 1-1/2 inches or as indicated on Drawings.

E. Furring Channels (Furring Members):

1. Steel Studs: ASTM C 645.

a. Minimum Base-Metal Thickness: 0.0179 inch.
b. Depth: As indicated on Drawings.

2. Hat-Shaped, Rigid Furring Channels: ASTM C 645, 7/8 inch deep.

a. Minimum Base Metal Thickness: 0.0179 inch.

F. Grid Suspension System for Ceilings: ASTM C 645, direct-hung system composed of main beams and cross-furring members that interlock.

1. Available Products: Subject to compliance with requirements, products that may be incorporated into the Work include, but are not limited to, the following:

a. Armstrong World Industries, Inc.; Drywall Grid Systems.
b. Chicago Metallic Corporation; 660-C Drywall Furring System.
c. USG Corporation; Drywall Suspension System.

2.3 STEEL FRAMING FOR FRAMED ASSEMBLIES

A. Steel Studs and Runners: ASTM C 645.

1. Minimum Base-Metal Thickness: 0.0179 inch.
2. Depth: As indicated on Drawings.

B. Slip-Type Head Joints: Where required, provide one of the following:

1. Single Long-Leg Runner System: ASTM C 645 top runner with 2-inch deep flanges in thickness not less than indicated for studs, installed with studs friction fit into top runner and with continuous bridging located within 12 inches of the top of studs to provide lateral bracing.
2. Double-Runner System: ASTM C 645 top runners, inside runner with 2-inch deep flanges in thickness not less than indicated for studs and fastened to studs, and outer runner sized to friction fit inside runner.

C. Firestop Tracks: Top runner manufactured to allow partition heads to expand and contract with movement of the structure while maintaining continuity of fire-resistance-rated assembly indicated; in thickness not less than indicated for studs and in width to accommodate depth of studs.

1. Products: Subject to compliance with requirements, provide one of the following:

a. Fire Trak Corp.; Fire Trak attached to studs with Fire Trak Slip Clip.
b. Metal-Lite, Inc.; The System.

D. Hat-Shaped, Rigid Furring Channels: ASTM C 645.

1. Minimum Base Metal Thickness: 0.0179 inch.
2. Depth: As indicated on Drawings.

E. Resilient Furring Channels: 1/2-inch deep, steel sheet members designed to reduce sound transmission.

1. Configuration: Asymmetrical or hat shaped.

F. Z-Shaped Furring: With slotted or nonslotted web, face flange of 1-1/4 inches, wall attachment flange of 7/8 inch, minimum bare-metal thickness of 0.0179 inch, and depth required to fit insulation thickness indicated.

## 2.4 AUXILIARY MATERIALS

A. General: Provide auxiliary materials that comply with referenced installation standards.

1. Fasteners for Metal Framing: Of type, material, size, corrosion resistance, holding power, and other properties required to fasten steel members to substrates.

B. Isolation Strip at Exterior Walls: Provide the following:

1. Foam Gasket: Adhesive-backed, closed-cell vinyl foam strips that allow fastener penetration without foam displacement, 1/8 inch thick, in width to suit steel stud size.

# PART 3 - EXECUTION

## 3.1 EXAMINATION

A. Examine areas and substrates, with Installer present, and including welded hollow-metal frames, cast-in anchors, and structural framing, for compliance with requirements and other conditions affecting performance.

1. Proceed with installation only after unsatisfactory conditions have been corrected.

## 3.2 PREPARATION

A. Suspended Assemblies: Coordinate installation of suspension systems with installation of overhead structure to ensure that inserts and other provisions for anchorages to building structure have been installed to receive hangers at spacing required to support the Work and that hangers will develop their full strength.

1. Furnish concrete inserts and other devices indicated to other trades for installation in advance of time needed for coordination and construction.

B. Coordination with Sprayed Fire-Resistive Materials:

1. Before sprayed fire-resistive materials are applied, attach offset anchor plates or ceiling runners (tracks) to surfaces indicated to receive sprayed fire-resistive materials. Where offset anchor plates are required, provide continuous plates fastened to building structure not more than 24 inches o.c.
2. After sprayed fire-resistive materials are applied, remove them only to extent necessary for installation of non-load-bearing steel framing. Do not reduce thickness of fire-resistive materials below that required for fire-resistance ratings indicated. Protect adjacent fire-resistive materials from damage.

## 3.3 INSTALLATION, GENERAL

A. Installation Standard: ASTM C 754, except comply with framing sizes and spacing indicated.

1. Gypsum Board Assemblies: Also comply with requirements in ASTM C 840 that apply to framing installation.

B. Install supplementary framing, and blocking to support fixtures, equipment services, heavy trim, grab bars, toilet accessories, furnishings, or similar construction.

C. Install bracing at terminations in assemblies.

D. Do not bridge building control and expansion joints with non-load-bearing steel framing members. Frame both sides of joints independently.

## 3.4 INSTALLING SUSPENSION SYSTEMS

A. Install suspension system components in sizes and spacings indicated on Drawings, but not less than those required by referenced installation standards for assembly types and other assembly components indicated.

B. Isolate suspension systems from building structure where they abut or are penetrated by building structure to prevent transfer of loading imposed by structural movement.

C. Suspend hangers from building structure as follows:

1. Install hangers plumb and free from contact with insulation or other objects within ceiling plenum that are not part of supporting structural or suspension system.

a. Splay hangers only where required to miss obstructions and offset resulting horizontal forces by bracing, countersplaying, or other equally effective means.

2. Where width of ducts and other construction within ceiling plenum produces hanger spacings that interfere with locations of hangers required to support standard suspension system members, install supplemental suspension members and hangers in the form of trapezes or equivalent devices.

a. Size supplemental suspension members and hangers to support ceiling loads within performance limits established by referenced installation standards.

3. Wire Hangers: Secure by looping and wire tying, either directly to structures or to inserts, eye screws, or other devices and fasteners that are secure and appropriate for substrate, and in a manner that will not cause hangers to deteriorate or otherwise fail.
4. Do not attach hangers to steel roof deck.
5. Do not attach hangers to permanent metal forms. Furnish cast-in-place hanger inserts that extend through forms.
6. Do not attach hangers to rolled-in hanger tabs of composite steel floor deck.
7. Do not connect or suspend steel framing from ducts, pipes, or conduit.

D. Fire-Resistance-Rated Assemblies: Wire tie furring channels to supports.

E. Grid Suspension Systems: Attach perimeter wall track or angle where grid suspension systems meet vertical surfaces. Mechanically join main beam and cross-furring members to each other and butt-cut to fit into wall track.

F. Installation Tolerances: Install suspension systems that are level to within 1/8 inch in 12 feet measured lengthwise on each member that will receive finishes and transversely between parallel members that will receive finishes.

## 3.5 INSTALLING FRAMED ASSEMBLIES

A. Where studs are installed directly against exterior masonry walls or dissimilar metals at exterior walls, install isolation strip between studs and exterior wall.

B. Install studs so flanges within framing system point in same direction.

1. Space studs as follows:

a. Single-Layer Application: 16 inches o.c., unless otherwise indicated.
b. Multilayer Application: 16 inches o.c., unless otherwise indicated.
c. Tile backing panels: 16 inches o.c., unless otherwise indicated.

C. Install tracks (runners) at floors and overhead supports. Extend framing full height to structural supports or substrates above suspended ceilings, except where partitions are indicated to terminate at suspended ceilings. Continue framing around ducts penetrating partitions above ceiling.

1. Slip-Type Head Joints: Where framing extends to overhead structural supports, install to produce joints at tops of framing systems that prevent axial loading of finished assemblies.
2. Door Openings: Screw vertical studs at jambs to jamb anchor clips on door frames; install runner track section (for cripple studs) at head and secure to jamb studs.

a. Install two studs at each jamb, unless otherwise indicated.

b. Install cripple studs at head adjacent to each jamb stud, with a minimum 1/2-inch clearance from jamb stud to allow for installation of control joint in finished assembly.
c. Extend jamb studs through suspended ceilings and attach to underside of overhead structure.

3. Other Framed Openings: Frame openings other than door openings the same as required for door openings, unless otherwise indicated. Install framing below sills of openings to match framing required above door heads.
4. Fire-Resistance-Rated Partitions: Install framing to comply with fire-resistance-rated assembly indicated and support closures and to make partitions continuous from floor to underside of solid structure.

a. Firestop Track: Where indicated, install to maintain continuity of fire-resistance-rated assembly indicated.

5. Sound-Rated Partitions: Install framing to comply with sound-rated assembly indicated.

D. Direct Furring:

1. Screw to wood framing.
2. Attach to concrete or masonry with stub nails, screws designed for masonry attachment, or powder-driven fasteners spaced 24 inches o.c.

E. Z-Furring Members:

1. Erect insulation (specified in Division 07 Section "Thermal Insulation") vertically and hold in place with Z-furring members spaced 24 inches o.c.
2. Except at exterior corners, securely attach narrow flanges of furring members to wall with concrete stub nails, screws designed for masonry attachment, or powder-driven fasteners spaced 24 inches o.c.
3. At exterior corners, attach wide flange of furring members to wall with short flange extending beyond corner; on adjacent wall surface, screw-attach short flange of furring channel to web of attached channel. At interior corners, space second member no more than 12 inches from corner and cut insulation to fit.

F. Installation Tolerance: Install each framing member so fastening surfaces vary not more than 1/8 inch from the plane formed by faces of adjacent framing.

**END OF SECTION 092216**

**SECTION 092400 – EXTERIOR COATING**

PART 1 - GENERAL

1.1 RELATED DOCUMENTS

A. Drawings and general provisions of the Contract, including General and Supplementary Conditions and Division 01 Specification Sections, apply to this Section.

1.2 SUMMARY

A. Section Includes:

1. Exterior Direct Applied Finish on Cement Board.

B. Related Sections:

1. Division 04 Section "Unit Masonry ".
2. Division 06 Section "Rough Carpentry" .

1.3 SUBMITTALS

A. Product Data: For each type of product indicated.

B. Samples for Verification: For each type of **factory-prepared** finish coat indicated; 12 by 12 inches, and prepared on rigid backing.

1.4 DELIVERY, STORAGE, AND HANDLING

A. Store materials inside under cover and keep them dry and protected against damage from weather, direct sunlight, surface contamination, corrosion, construction traffic, and other causes.

1.5 PROJECT CONDITIONS

A. Exterior work:
1. Apply product when ambient temperature is greater than 40 deg F.
2. Protect plaster coats from freezing for not less than 48 hours after set of plaster coat has occurred.

B. Factory-Prepared Finishes: Comply with manufacturer's written recommendations for environmental conditions for applying finishes.

PART 2 - PRODUCTS

2.1 ACCESSORIES

A. General: Comply with ASTM C 1063 and coordinate depth of trim and accessories with thicknesses and number of coats required.

B. Metal Accessories:

1. Manufacturers: Subject to compliance with requirements, **available manufacturers offering products that may be incorporated into the Work include, but are not limited to, the following**:

a. CEMCO.
b. Dietrich Metal Framing; a Worthington Industries company.

2. Control Joints: Fabricated from **zinc-coated (galvanized) steel**; one-piece-type, folded pair of unperforated screeds in M-shaped configuration; with perforated flanges and removable protective tape on plaster face of control joint.

2.2 MATERIALS

A. Acrylic-Based Finish Coatings: Factory-mixed acrylic-emulsion coating systems, formulated with colorfast mineral pigments and fine aggregates; for use over portland cement plaster base coats. Include manufacturer's recommended primers and sealing topcoats for acrylic-based finishes.

1. Products: Subject to compliance with requirements, **available products that may be incorporated into the Work include, but are not limited to, the following**:

a. LaHabra, a brand of ParexLaHabra, Inc.; Acrylic Finish.

2. Color: “Parex, 10432 Warm Sand”.

3. Texture: “Parex Flextex 429”.

2.3 PLASTER MIXES

A. General: Comply with ASTM C 926 for applications indicated.

1. Fiber Content: Add fiber to base-coat mixes after ingredients have mixed at least two minutes. Comply with fiber manufacturer's written instructions for fiber quantities in mixes, but do not exceed 1 lb of fiber/cu. yd. of cementitious materials.

B. Base-Coat Mixes: Single base coats for two-coat plasterwork as follows:

1. Portland Cement Mix: For cementitious material, mix 1 part portland cement and 0 to 3/4 part lime. Use 2-1/2 to 4 parts aggregate per part of cementitious material.

C. Base-Coat Mixes: Single base coats for two-coat plasterwork as follows:

1. Portland Cement Mix: For cementitious material, mix 1 part portland cement and 3/4 to 1-1/2 parts lime. Use 2-1/2 to 4 parts aggregate per part of cementitious material.

D. Factory-Prepared Finish-Coat Mixes: For **acrylic-based finish coatings**, comply with manufacturer's written instructions.

PART 3 - EXECUTION

3.1 EXAMINATION

A. Examine areas and substrates, with Installer present, and including welded hollow-metal frames, cast-in anchors, and structural framing, for compliance with requirements and other conditions affecting performance of the Work.

B. Proceed with installation only after unsatisfactory conditions have been corrected.

3.2 PREPARATION

A. Protect adjacent work from soiling, spattering, moisture deterioration, and other harmful effects caused by plastering.

B. Prepare solid substrates for plaster that are smooth or that do not have the suction capability required to bond with plaster according to ASTM C 926.

3.3 INSTALLING ACCESSORIES

A. Install according to ASTM C 1063 and at locations indicated on Drawings.

B. Control Joints: Install control joints **at locations indicated on Drawings.**

3.4 FINISH APPLICATION

A. Acrylic-Based Finish Coatings: Apply coating system, including primers, finish coats, and sealing topcoats, according to manufacturer's written instructions.

3.5 REPAIRS

A. Repair or replace work to eliminate cracks, dents, blisters, buckles, crazing and check cracking, dry outs, efflorescence, sweat outs, and similar defects and where bond to substrate has failed.

3.6 PROTECTION

A. Remove temporary protection and enclosure of other work. Promptly remove plaster from door frames, windows, and other surfaces not indicated to be plastered. Repair floors, walls, and other surfaces stained, marred, or otherwise damaged during plastering.

**END OF SECTION 092400**

**SECTION 092900 - GYPSUM BOARD**

PART 1 - GENERAL

1.1 RELATED DOCUMENTS

A. Drawings and general provisions of the Contract, including General and Supplementary Conditions and Division 01 Specification Sections, apply to this Section.

1.2 SUMMARY

A. This Section includes the following:

1. Interior gypsum board.
2. Tile backing panels.

B. Related Sections include the following:

1. Division 05 Section "Cold-Formed Metal Framing" for load-bearing steel framing that supports gypsum board.
2. Division 06 Section "Rough Carpentry" for wood framing and furring that supports gypsum board.
3. Division 07 Section "Thermal Insulation".
4. Division 07 Section " Joint Systems" .
5. Division 09 Section "Non-Structural Metal Framing" for non-structural framing and suspension systems that support gypsum board.
6. Division 09 Section "Interior Painting" .

1.3 SUBMITTALS

A. Product Data: For each type of product indicated.

1.4 QUALITY ASSURANCE

A. Fire-Resistance-Rated Assemblies: For fire-resistance-rated assemblies, provide materials and construction identical to those tested in assembly indicated according to ASTM E 119 by an independent testing agency.

B. STC-Rated Assemblies: For STC-rated assemblies, provide materials and construction identical to those tested in assembly indicated according to ASTM E 90 and classified according to ASTM E 413 by an independent testing agency.

1.5 STORAGE AND HANDLING

A. Store materials inside under cover and keep them dry and protected against damage from weather, condensation, direct sunlight, construction traffic, and other causes. Stack panels flat to prevent sagging.

1.6 PROJECT CONDITIONS

A. Environmental Limitations: Comply with ASTM C 840 requirements or gypsum board manufacturer's written recommendations, whichever are more stringent.

B. Do not install interior products until installation areas are enclosed and conditioned.

C. Do not install panels that are wet, those that are moisture damaged, and those that are mold damaged.

1. Indications that panels are wet or moisture damaged include, but are not limited to, discoloration, sagging, or irregular shape.
2. Indications that panels are mold damaged include, but are not limited to, fuzzy or splotchy surface contamination and discoloration.

PART 2 - PRODUCTS

2.1 PANELS, GENERAL

A. Size: Provide in maximum lengths and widths available that will minimize joints in each area and that correspond with support system indicated.

2.2 INTERIOR GYPSUM BOARD

A. General: Complying with ASTM C 36/C 36M or ASTM C 1396/C 1396M, as applicable to type of gypsum board indicated and whichever is more stringent.

1. Available Manufacturers: Subject to compliance with requirements, manufacturers offering products that may be incorporated into the Work include, but are not limited to, the following:

a. American Gypsum Co.
b. National Gypsum Company.
c. USG Corporation.

B. Type X:

1. Thickness: 5/8 inch.
2. Long Edges: Tapered.

2.3 TILE BACKING PANELS

A. Glass-Mat, Water-Resistant Backing Board:

1. Complying with ASTM C 1178/C 1178M.

a. Product: Subject to compliance with requirements, provide "DensShield Tile Guard" by G-P Gypsum.

2. Complying with ASTM C1177/C 1177M.

a. Product: Subject to compliance with requirements, provide "DensArmor Plus Interior Guard" by G-P Gypsum.

3. Core: 5/8 inch, Type X].

2.4 TRIM ACCESSORIES

A. Interior Trim: ASTM C 1047.

1. Material: Galvanized or aluminum-coated steel sheet or rolled zinc.
2. Shapes:

a. Cornerbead.
b. LC-Bead: J-shaped; exposed long flange receives joint compound.
c. Expansion (control) joint.

2.5 JOINT TREATMENT MATERIALS

A. General: Comply with ASTM C 475/C 475M.

B. Joint Tape:

1. Interior Gypsum Wallboard: Paper.
2. Tile Backing Panels: As recommended by panel manufacturer.

C. Joint Compound for Interior Gypsum Wallboard: For each coat use formulation that is compatible with other compounds applied on previous or for successive coats.

1. Prefilling: At open joints and damaged surface areas, use setting-type taping compound.
2. Embedding and First Coat: For embedding tape and first coat on joints, fasteners, and trim flanges, use drying-type, all-purpose compound.

3. Fill Coat: For second coat, use drying-type, all-purpose compound.
4. Finish Coats: For third and fourth coat, use drying-type, all-purpose compound.
5. Skim Coat: For final coat of Level 5 finish, use drying-type, all-purpose compound or high-build interior coating product designed for application by airless sprayer and to be used instead of skim coat to produce Level 5 finish.

D. Joint Compound for Tile Backing Panels:

1. Glass-Mat, Water-Resistant Backing Panel: As recommended by backing panel manufacturer.

2.6 AUXILIARY MATERIALS

A. General: Provide auxiliary materials that comply with referenced installation standards and manufacturer's written recommendations.

B. Steel Drill Screws: ASTM C 1002, unless otherwise indicated.

1. Use screws complying with ASTM C 954 for fastening panels to steel members from 0.033 to 0.112 inch thick.

C. Sound Attenuation Blankets: ASTM C 665, Type I (blankets without membrane facing) produced by combining thermosetting resins with mineral fibers manufactured from glass, slag wool, or rock wool.

1. Fire-Resistance-Rated Assemblies: Comply with mineral-fiber requirements of assembly.

D. Acoustical Sealant: As specified in Division 07 Section "Joint Sealants."

E. Vapor Retarder: 6 mil poly ethylene rolled product.

PART 3 - EXECUTION

3.1 EXAMINATION

A. Examine areas and substrates, with Installer present, and including welded hollow-metal frames and framing, for compliance with requirements and other conditions affecting performance.

B. Examine panels before installation. Reject panels that are wet, moisture damaged, and mold damaged.

C. Proceed with installation only after unsatisfactory conditions have been corrected.

3.2 APPLYING AND FINISHING PANELS, GENERAL

A. Comply with ASTM C 840.

B. Install ceiling panels across framing to minimize the number of abutting end joints and to avoid abutting end joints in central area of each ceiling. Stagger abutting end joints of adjacent panels not less than one framing member.

C. Install panels with face side out. Butt panels together for a light contact at edges and ends with not more than 1/16 inch of open space between panels. Do not force into place.

D. Locate edge and end joints over supports, except in ceiling applications where intermediate supports or gypsum board back-blocking is provided behind end joints. Do not place tapered edges against cut edges or ends. Stagger vertical joints on opposite sides of partitions. Do not make joints other than control joints at corners of framed openings.

E. Form control and expansion joints with space between edges of adjoining gypsum panels.

F. Cover both faces of support framing with gypsum panels in concealed spaces (above ceilings, etc.), except in chases braced internally.

1. Unless concealed application is indicated or required for sound, fire, air, or smoke ratings, coverage may be accomplished with scraps of not less than 8 sq. ft. in area.
2. Fit gypsum panels around ducts, pipes, and conduits.
3. Where partitions intersect structural members projecting below underside of floor/roof slabs and decks, cut gypsum panels to fit profile formed by structural members; allow 1/4- to 3/8-inch wide joints to install sealant.

G. Isolate perimeter of gypsum board applied to non-load-bearing partitions at structural abutments, except floors. Provide 1/4- to 1/2-inch wide spaces at these locations, and trim edges with edge trim where edges of panels are exposed. Seal joints between edges and abutting structural surfaces with acoustical sealant.

H. Attachment to Steel Framing: Attach panels so leading edge or end of each panel is attached to open (unsupported) edges of stud flanges first.

I. Wood Framing: Install gypsum panels over wood framing, with floating internal corner construction. Do not attach gypsum panels across the flat grain of wide-dimension lumber, including floor joists and headers. Float gypsum panels over these members, or provide control joints to counteract wood shrinkage.

## 3.3 APPLYING INTERIOR GYPSUM BOARD

A. Install interior gypsum board in the following locations:

1. Type X: As scheduled on Drawings.

B. Single-Layer Application:

1. On ceilings, apply gypsum panels before wall/partition board application to greatest extent possible and at right angles to framing, unless otherwise indicated.
2. On partitions/walls, apply gypsum panels vertically (parallel to framing), unless otherwise indicated or required by fire-resistance-rated assembly, and minimize end joints.

   a. Stagger abutting end joints not less than one framing member in alternate courses of panels.
   b. At stairwells and other high walls, install panels horizontally, unless otherwise indicated or required by fire-resistance-rated assembly.

3. On Z-furring members, apply gypsum panels vertically (parallel to framing) with no end joints. Locate edge joints over furring members.
4. Fastening Methods: Apply gypsum panels to supports with steel drill screws.

## 3.4 APPLYING TILE BACKING PANELS

A. Glass-Mat, Water-Resistant Backing Panel: Comply with manufacturer's written installation instructions and install at showers, tubs, and locations indicated to receive tile. Install with 1/4-inch gap where panels abut other construction or penetrations.

B. Where tile backing panels abut other types of panels in same plane, shim (if applicable) surfaces to produce a uniform plane across panel surfaces.

## 3.5 INSTALLING TRIM ACCESSORIES

A. General: For trim with back flanges intended for fasteners, attach to framing with same fasteners used for panels. Otherwise, attach trim according to manufacturer's written instructions.

B. Control Joints: Install control joints according to ASTM C 840 and in specific locations approved by Architect for visual effect.
1. At partition of furring runs exceeding 30’.
2. At openings less than full height extend control joints from both corners to the ceiling and floor as applicable. Full height openings may be used as a control joints.

C. Interior Trim: Install in the following locations:

1. Cornerbead: Use at outside corners.
2. LC-Bead: Use at exposed panel edges.

3.6 FINISHING GYPSUM BOARD

A. General: Treat gypsum board joints, interior angles, edge trim, control joints, penetrations, fastener heads, surface defects, and elsewhere as required to prepare gypsum board surfaces for decoration. Promptly remove residual joint compound from adjacent surfaces.

B. Prefill open joints and damaged surface areas.

C. Apply joint tape over gypsum board joints, except those with trim having flanges not intended for tape.

D. Gypsum Board Finish Levels: Finish panels to levels indicated below and according to ASTM C 840:

1. Level 1: At unexposed fire separation systems.

2. Level 5: At all panel surfaces that will be exposed to view.

a. Primer and its application to surfaces are specified in other Division 09 Sections.

E. Glass-Mat, Water-Resistant Backing Panels: Finish according to manufacturer's written instructions.

3.7 PROTECTION

A. Protect installed products from damage from weather, condensation, direct sunlight, construction, and other causes during remainder of the construction period.

B. Remove and replace panels that are wet, moisture damaged, and mold damaged.

1. Indications that panels are wet or moisture damaged include, but are not limited to, discoloration, sagging, or irregular shape.
2. Indications that panels are mold damaged include, but are not limited to, fuzzy or splotchy surface contamination and discoloration.

**END OF SECTION 092900**

**SECTION 093000 - TILING**

PART 1 - GENERAL

1.1 RELATED DOCUMENTS

A. Drawings and general provisions of the Contract, including General and Supplementary Conditions and Division 01 Specification Sections, apply to this Section.

1.2 SUMMARY

A. Section Includes:

1. Ceramic tile.
2. Tile backing panels.
3. Metal edge strips.

B. Related Sections:
1. Division 07 Section "Joint Sealants" for sealing of expansion, contraction, control, and isolation joints in tile surfaces.
2. Division 09 Section "Gypsum Board" for glass-mat, water-resistant backer board.

1.3 DEFINITIONS

A. General: Definitions in the ANSI A108 series of tile installation standards and in ANSI A137.1 apply to Work of this Section unless otherwise specified.

B. ANSI A108 Series: ANSI A108.01, ANSI A108.02, ANSI A108.1A, ANSI A108.1B, ANSI A108.1C, ANSI A108.4, ANSI A108.5, ANSI A108.6, ANSI A108.8, ANSI A108.9, ANSI A108.10, ANSI A108.11, ANSI A108.12, ANSI A108.13, ANSI A108.14, ANSI A108.15, ANSI A108.16, and ANSI A108.17, which are contained in "American National Standard Specifications for Installation of Ceramic Tile."

C. Module Size: Actual tile size plus joint width indicated.

D. Face Size: Actual tile size, excluding spacer lugs.

1.4 SUBMITTALS

A. Product Data: For each type of product indicated.

B. Shop Drawings: Show locations of each type of tile and tile pattern. Show widths, details, and locations of expansion, contraction, control, and isolation joints in tile substrates and finished tile surfaces.

C. Samples for Verification:

1. Full-size units of each type and composition of tile and for each color and finish required.
2. Full-size units of each type of trim and accessory.
3. Metal edge strips in 6-inch lengths.

1.5 QUALITY ASSURANCE

A. Source Limitations for Tile: Obtain tile from one source or producer.

1. Obtain tile of each type and color or finish from same production run and of consistent quality in appearance and physical properties for each contiguous area.

B. Source Limitations for Setting and Grouting Materials: Obtain ingredients of a uniform quality for each mortar, adhesive, and grout component from one manufacturer and each aggregate from one source or producer.

C. Source Limitations for Other Products: Obtain each of the following products specified in this Section from a single manufacturer for each product:

1. Joint sealants.
2. Metal edge strips.

1.6 DELIVERY, STORAGE, AND HANDLING

A. Deliver and store packaged materials in original containers with seals unbroken and labels intact until time of use. Comply with requirements in ANSI A137.1 for labeling tile packages.

B. Store tile and cementitious materials on elevated platforms, under cover, and in a dry location.

C. Store aggregates where grading and other required characteristics can be maintained and contamination can be avoided.

D. Store liquid materials in unopened containers and protected from freezing.

E. Handle tile that has temporary protective coating on exposed surfaces to prevent coated surfaces from contacting backs or edges of other units. If coating does contact bonding surfaces of tile, remove coating from bonding surfaces before setting tile.

1.7 PROJECT CONDITIONS

A. Environmental Limitations: Do not install tile until construction in spaces is complete and ambient temperature and humidity conditions are maintained at the levels indicated in referenced standards and manufacturer's written instructions.

PART 2 - PRODUCTS

2.1 PRODUCTS, GENERAL

A. ANSI Ceramic Tile Standard: Provide tile that complies with ANSI A137.1 for types, compositions, and other characteristics indicated.

1. Provide tile complying with Standard grade requirements unless otherwise indicated.

B. ANSI Standards for Tile Installation Materials: Provide materials complying with ANSI A108.02, ANSI standards referenced in other Part 2 articles, ANSI standards referenced by TCA installation methods specified in tile installation schedules, and other requirements specified.

C. Factory Blending: For tile exhibiting color variations within ranges, blend tile in factory and package so tile units taken from one package show same range in colors as those taken from other packages and match approved Samples.

## 2.2 TILE PRODUCTS

A. Tile Type: Wall tile.

1. Manufacturers: Subject to compliance with requirements, available manufacturers offering products that may be incorporated into the Work include, but are not limited to, the following:

   a. Crossville Inc. “EC114 Grand Canyon”.
   b. United States Ceramic Tile Company.
   c. American Olean; Division of Dal-Tile International Inc.

2. Module Size: 12 inches X 12 inches.
3. Thickness: 5/16 inch.
4. Finish: Semimat, opaque glaze.
5. Tile Color and Pattern: “Crossville Inc. “EC114 Grand Canyon””.
6. Grout Color: “Hydroment, Delorean Grey H160”..
7. Trim Units: Provide shapes as follows, selected from manufacturer's standard shapes:

   a. Wainscot Cap for Thin-Set Mortar Installations: Surface bullnose.
   b. External Corners for Thin-Set Mortar Installations: Surface bullnose, same size as adjoining flat tile.

## 2.3 SETTING MATERIALS

A. Latex-Portland Cement Mortar (Thin Set): ANSI A118.4.

1. Manufacturers: Subject to compliance with requirements, available manufacturers offering products that may be incorporated into the Work include, but are not limited to, the following:

   a. MAPEI Corporation.
   b. TEC; a subsidiary of H. B. Fuller Company.

2. Provide prepackaged, dry-mortar mix containing dry, redispersible, vinyl acetate or acrylic additive to which only water must be added at Project site.
3. For wall applications, provide mortar that complies with requirements for nonsagging mortar in addition to the other requirements in ANSI A118.4.

## 2.4 GROUT MATERIALS

A. Standard Cement Grout: ANSI A118.6.

1. Manufacturers: Subject to compliance with requirements, available manufacturers offering products that may be incorporated into the Work include, but are not limited to, the following:

   a. Hydroment Inc.

   b. MAPEI Corporation.
   c. TEC; a subsidiary of H. B. Fuller Company.

2.5 ELASTOMERIC SEALANTS

A. General: Provide sealants, primers, backer rods, and other sealant accessories that comply with the applicable requirements in Division 07 Section "Joint Sealants."

B. Colors: Provide colors of exposed sealants to match colors of grout in tile adjoining sealed joints unless otherwise indicated.

2.6 MISCELLANEOUS MATERIALS

A. Tile Cleaner: A neutral cleaner capable of removing soil and residue without harming tile and grout surfaces, specifically approved for materials and installations indicated by tile and grout manufacturers.

B. Grout Sealer: Manufacturer's standard silicone product for sealing grout joints and that does not change color or appearance of grout.

2.7 MIXING MORTARS AND GROUT

A. Mix mortars and grouts to comply with referenced standards and mortar and grout manufacturers' written instructions.

B. Add materials, water, and additives in accurate proportions.

C. Obtain and use type of mixing equipment, mixer speeds, mixing containers, mixing time, and other procedures to produce mortars and grouts of uniform quality with optimum performance characteristics for installations indicated.

PART 3 - EXECUTION

3.1 EXAMINATION

A. Examine substrates, areas, and conditions where tile will be installed, with Installer present, for compliance with requirements for installation tolerances and other conditions affecting performance of installed tile.

1. Verify that substrates for setting tile are firm, dry, clean, free of coatings that are incompatible with tile-setting materials including curing compounds and other substances that contain soap, wax, oil, or silicone; and comply with flatness tolerances required by ANSI A108.01 for installations indicated.

2. Verify that installation of grounds, anchors, recessed frames, electrical and mechanical units of work, and similar items located in or behind tile has been completed.
3. Verify that joints and cracks in tile substrates are coordinated with tile joint locations; if not coordinated, adjust joint locations in consultation with Architect.

B. Proceed with installation only after unsatisfactory conditions have been corrected.

## 3.2 PREPARATION

A. Where indicated, prepare substrates to receive waterproofing by applying a reinforced mortar bed that complies with ANSI A108.1A and is sloped 1/4 inch per foot toward drains.

B. Blending: For tile exhibiting color variations, verify that tile has been factory blended and packaged so tile units taken from one package show same range of colors as those taken from other packages and match approved Samples. If not factory blended, either return to manufacturer or blend tiles at Project site before installing.

C. Field-Applied Temporary Protective Coating: If indicated under tile type or needed to prevent grout from staining or adhering to exposed tile surfaces, precoat them with continuous film of temporary protective coating, taking care not to coat unexposed tile surfaces.

## 3.3 TILE INSTALLATION

A. Comply with TCA's "Handbook for Ceramic Tile Installation" for TCA installation methods specified in tile installation schedules. Comply with parts of the ANSI A108 Series "Specifications for Installation of Ceramic Tile" that are referenced in TCA installation methods, specified in tile installation schedules, and apply to types of setting and grouting materials used.

B. Extend tile work into recesses and under or behind equipment and fixtures to form complete covering without interruptions unless otherwise indicated. Terminate work neatly at obstructions, edges, and corners without disrupting pattern or joint alignments.

C. Accurately form intersections and returns. Perform cutting and drilling of tile without marring visible surfaces. Carefully grind cut edges of tile abutting trim, finish, or built-in items for straight aligned joints. Fit tile closely to electrical outlets, piping, fixtures, and other penetrations so plates, collars, or covers overlap tile.

D. Jointing Pattern: Lay tile in grid pattern unless otherwise indicated. Lay out tile work and center tile fields in both directions in each space or on each wall area. Lay out tile work to minimize the use of pieces that are less than half of a tile. Provide uniform joint widths unless otherwise indicated.

1. For tile mounted in sheets, make joints between tile sheets same width as joints within tile sheets so joints between sheets are not apparent in finished work.
2. Where adjoining tiles on floor, base, walls, or trim are specified or indicated to be same size, align joints.
3. Where tiles are specified or indicated to be whole integer multiples of adjoining tiles on floor, base, walls, or trim, align joints unless otherwise indicated.

E. Lay out tile wainscots to dimensions indicated or to next full tile beyond dimensions indicated.

F. Expansion Joints: Provide expansion joints and other sealant-filled joints, including control, contraction, and isolation joints, where indicated. Form joints during installation of setting materials, mortar beds, and tile. Do not saw-cut joints after installing tiles.

1. Where joints occur in concrete substrates, locate joints in tile surfaces directly above them.
2. Prepare joints and apply sealants to comply with requirements in Division 07 Section "Joint Sealants."

G. Grout Sealer: Apply grout sealer to cementitious grout joints according to grout-sealer manufacturer's written instructions. As soon as grout sealer has penetrated grout joints, remove excess sealer and sealer from tile faces by wiping with soft cloth.

## 3.4 CLEANING AND PROTECTING

A. Cleaning: On completion of placement and grouting, clean all ceramic tile surfaces so they are free of foreign matter.

1. Remove grout residue from tile as soon as possible.
2. Clean grout smears and haze from tile according to tile and grout manufacturer's written instructions but no sooner than 10 days after installation. Use only cleaners recommended by tile and grout manufacturers and only after determining that cleaners are safe to use by testing on samples of tile and other surfaces to be cleaned. Protect metal surfaces and plumbing fixtures from effects of cleaning. Flush surfaces with clean water before and after cleaning.
3. Remove temporary protective coating by method recommended by coating manufacturer and that is acceptable to tile and grout manufacturer. Trap and remove coating to prevent drain clogging.

B. Protect installed tile work with kraft paper or other heavy covering during construction period to prevent staining, damage, and wear. If recommended by tile manufacturer, apply coat of neutral protective cleaner to completed tile walls and floors.

C. Prohibit foot and wheel traffic from tiled floors for at least seven days after grouting is completed.

D. Before final inspection, remove protective coverings and rinse neutral protective cleaner from tile surfaces.

## 3.5 INTERIOR TILE INSTALLATION SCHEDULE

A. Interior Wall Installations, Masonry or Concrete:

1. Tile Installation W202: Thin-set mortar; TCA W202.

   a. Tile Type: Crossville, EC114 Grand Canyon.
   b. Thin-Set Mortar: Latex- portland cement mortar.
   c. Grout: Standard sanded cement grout.

B. Interior Wall Installations, Metal Studs or Furring:

1. Tile Installation W245: Thin-set mortar on coated glass-mat, water-resistant gypsum backer board; TCA W245.

   a. Tile Type: Crossville, EC114 Grand Canyon.
   b. Thin-Set Mortar: Latex- portland cement mortar.
   c. Grout: Standard sanded cement grout.

**END OF SECTION 093000**

**SECTION 095113 - ACOUSTICAL PANEL CEILINGS**

PART 1 - GENERAL

1.1 RELATED DOCUMENTS

A. Drawings and general provisions of the Contract, including General and Supplementary Conditions and Division 01 Specification Sections, apply to this Section.

1.2 SUMMARY

A. This Section includes acoustical panels and exposed suspension systems for ceilings.

B. Related Sections include the following:

1. Division 09 Section "Gypsum Wall Board" .
2. Division 09 Section "Metal Framing."

1.3 DEFINITIONS

A. AC: Articulation Class.

B. CAC: Ceiling Attenuation Class.

C. LR: Light Reflectance coefficient.

D. NRC: Noise Reduction Coefficient.

1.4 SUBMITTALS

A. Product Data: For each type of product indicated.

B. Coordination Drawings: Reflected ceiling plans, drawn to scale, on which the following items are shown and coordinated with each other, based on input from installers of the items involved:

1. Ceiling suspension system members.
2. Method of attaching hangers to building structure.

a. Furnish layouts for cast-in-place anchors, clips, and other ceiling attachment devices whose installation is specified in other Sections.

3. Ceiling-mounted items including lighting fixtures, diffusers, grilles, speakers, sprinklers, access panels, and special moldings.

C. Samples for Verification: For each component indicated and for each exposed finish required, prepared on Samples of size indicated below.

1. Acoustical Panel: Set of 6-inch- square Samples of each type, color, pattern, and texture.

2. Exposed Suspension System Members, Moldings, and Trim: Set of 12-inch- long Samples of each type, finish, and color.

1.5 QUALITY ASSURANCE

A. Source Limitations:

1. Acoustical Ceiling Panel: Obtain each type through one source from a single manufacturer.
2. Suspension System: Obtain each type through one source from a single manufacturer.

B. Source Limitations: Obtain each type of acoustical ceiling panel and supporting suspension system through one source from a single manufacturer.

1.6 DELIVERY, STORAGE, AND HANDLING

A. Deliver acoustical panels, suspension system components, and accessories to Project site in original, unopened packages and store them in a fully enclosed, conditioned space where they will be protected against damage from moisture, humidity, temperature extremes, direct sunlight, surface contamination, and other causes.

B. Before installing acoustical panels, permit them to reach room temperature and a stabilized moisture content.

C. Handle acoustical panels carefully to avoid chipping edges or damaging units in any way.

1.7 PROJECT CONDITIONS

A. Environmental Limitations: Do not install acoustical panel ceilings until spaces are enclosed and weatherproof, wet work in spaces is complete and dry, work above ceilings is complete, and ambient temperature and humidity conditions are maintained at the levels indicated for Project when occupied for its intended use.

1. Pressurized Plenums: Operate ventilation system for not less than 48 hours before beginning acoustical panel ceiling installation.

1.8 COORDINATION

A. Coordinate layout and installation of acoustical panels and suspension system with other construction that penetrates ceilings or is supported by them, including light fixtures, HVAC equipment, fire-suppression system, and partition assemblies.

1.9 EXTRA MATERIALS

A. Furnish extra materials described below that match products installed and that are packaged with protective covering for storage and identified with labels describing contents.

1. Acoustical Ceiling Panels: Full-size panels equal to 2.0 percent of quantity installed.
2. Suspension System Components: Quantity of each exposed component equal to 2.0 percent of quantity installed.

PART 2 - PRODUCTS

2.1 ACOUSTICAL PANELS, GENERAL

A. Acoustical Panel Standard: Provide manufacturer's standard panels of configuration indicated that comply with ASTM E 1264 classifications as designated by types, patterns, acoustical ratings, and light reflectances, unless otherwise indicated.

B. Acoustical Panel Colors and Patterns: Match appearance characteristics indicated for each product type.

1. Where appearance characteristics of acoustical panels are indicated by referencing pattern designations in ASTM E 1264 and not manufacturers' proprietary product designations, provide products selected by Architect from each manufacturer's full range that comply with requirements indicated for type, pattern, color, light reflectance, acoustical performance, edge detail, and size.

C. Antimicrobial Fungicide Treatment: Provide acoustical panels with face and back surfaces coated with antimicrobial treatment consisting of manufacturer's standard formulation with fungicide added to inhibit growth of mold and mildew and showing no mold or mildew growth when tested according to ASTM D 3273 and evaluated according to ASTM D 3274 or ASTM G 21.

2.2 ACOUSTICAL PANELS FOR ACOUSTICAL PANEL CEILING

A. Available Products: Subject to compliance with requirements, products that may be incorporated into the Work include, but are not limited to, the following:

1. Armstrong World Industries, Inc. “Ultima, 1912, Beveled Tegular”.
2. USG Interiors, Inc.

B. Classification: Provide panels complying with ASTM E 1264 for type, form, and pattern as follows:

1. Type and Form: Type IV, mineral base with painted finish; Form 2.
2. Pattern: E .

C. Color: White.

D. LR: Not less than 0.9.

E. NRC: Not less than 0.70.

F. Edge/Joint Detail: Reveal sized to fit flange of exposed suspension system members.

G. Thickness: 3/4 inch.

H. Modular Size: 24 by 24 inches.

I. Antimicrobial Treatment: Fungicide based.

2.3 METAL SUSPENSION SYSTEMS, GENERAL

A. Metal Suspension System Standard: Provide manufacturer's standard direct-hung metal suspension systems of types, structural classifications, and finishes indicated that comply with applicable requirements in ASTM C 635.

B. Finishes and Colors, General: Comply with NAAMM's "Metal Finishes Manual for Architectural and Metal Products" for recommendations for applying and designating finishes. Provide manufacturer's standard factory-applied finish for type of system indicated.

1. High-Humidity Finish: Comply with ASTM C 635 requirements for "Coating Classification for Severe Environment Performance" where high-humidity finishes are indicated.

C. Attachment Devices: Size for five times the design load indicated in ASTM C 635, Table 1, "Direct Hung," unless otherwise indicated. Comply with seismic design requirements.

1. Anchors in Concrete: Anchors of type and material indicated below, with holes or loops for attaching hangers of type indicated and with capability to sustain, without failure, a load equal to five times that imposed by ceiling construction, as determined by testing per ASTM E 488 or ASTM E 1512 as applicable, conducted by a qualified testing and inspecting agency.

a. Type: Postinstalled expansion anchors.
b. Corrosion Protection: Carbon-steel components zinc plated to comply with ASTM B 633, Class Fe/Zn 5 (0.005 mm) for Class SC 1 service condition.

D. Wire Hangers, Braces, and Ties: Provide wires complying with the following requirements:

1. Zinc-Coated, Carbon-Steel Wire: ASTM A 641/A 641M, Class 1 zinc coating, soft temper.
2. Size: Select wire diameter so its stress at 3 times hanger design load (ASTM C 635, Table 1, "Direct Hung") will be less than yield stress of wire, but provide not less than 0.135-inch-diameter wire.

## 2.4 METAL SUSPENSION SYSTEM FOR ACOUSTICAL PANEL CEILING

A. Available Products: Subject to compliance with requirements, products that may be incorporated into the Work include, but are not limited to, the following:

1. Armstrong World Industries, Inc.
2. Chicago Metallic Corporation.
3. USG Interiors, Inc.

B. Narrow-Face, Capped, Double-Web, Steel Suspension System: Main and cross runners roll formed from cold-rolled steel sheet, prepainted, electrolytically zinc coated, or hot-dip galvanized according to ASTM A 653/A 653M, not less than G30 (Z90) coating designation, with prefinished 9/16-inch- wide metal caps on flanges.

1. Structural Classification: Intermediate-duty system.
2. End Condition of Cross Runners: Override (stepped) or butt-edge type.
3. Face Design: Flat, flush.
4. Cap Material: Steel cold-rolled sheet.
5. Cap Finish: Painted white.

## 2.5 METAL EDGE MOLDINGS AND TRIM

A. Available Products: Subject to compliance with requirements, products that may be incorporated into the Work include, but are not limited to, the following:

1. Armstrong World Industries, Inc.
2. Chicago Metallic Corporation.

3. USG Interiors, Inc.

B. Extruded-Aluminum Edge Moldings and Trim: Where indicated, provide manufacturer's extruded-aluminum edge moldings and trim of profile indicated or referenced by manufacturer's designations, including splice plates, corner pieces, and attachment and other clips, complying with seismic design requirements and the following:

1. Aluminum Alloy: Alloy and temper recommended by aluminum producer and finisher for type of use and finish indicated, and with not less than the strength and durability properties of aluminum extrusions complying with ASTM B 221 for Alloy and Temper 6063-T5.
2. Finish designations prefixed by AA comply with system established by the Aluminum Association for designating aluminum finishes.
3. Baked-Enamel Finish: AA-C12C42R1x (Chemical Finish: cleaned with inhibited chemicals; Chemical Finish: acid-chromate-fluoride-phosphate conversion coating; organic coating: as specified below). Apply baked enamel complying with paint manufacturer's written instructions for cleaning, conversion coating, and painting.

## 2.6 ACOUSTICAL SEALANT

A. Available Products: Subject to compliance with requirements, products that may be incorporated into the Work include, but are not limited to, the following:
1. See Division 07 “Sealants”.

# PART 3 - EXECUTION

## 3.1 EXAMINATION

A. Examine substrates, areas, and conditions, including structural framing to which acoustical panel ceilings attach or abut, with Installer present, for compliance with requirements specified in this and other Sections that affect ceiling installation and anchorage and with requirements for installation tolerances and other conditions affecting performance of acoustical panel ceilings.

1. Proceed with installation only after unsatisfactory conditions have been corrected.

## 3.2 PREPARATION

A. Measure each ceiling area and establish layout of acoustical panels to balance border widths at opposite edges of each ceiling. Avoid using less-than-half-width panels at borders, and comply with layout shown on reflected ceiling plans.

## 3.3 INSTALLATION

A. General: Install acoustical panel ceilings to comply with ASTM C 636 and seismic design requirements indicated, per manufacturer's written instructions and CISCA's "Ceiling Systems Handbook."

B. Suspend ceiling hangers from building's structural members and as follows:

1. Install hangers plumb and free from contact with insulation or other objects within ceiling plenum that are not part of supporting structure or of ceiling suspension system.

2. Splay hangers only where required to miss obstructions; offset resulting horizontal forces by bracing, countersplaying, or other equally effective means.
3. Where width of ducts and other construction within ceiling plenum produces hanger spacings that interfere with location of hangers at spacings required to support standard suspension system members, install supplemental suspension members and hangers in form of trapezes or equivalent devices.
4. Secure wire hangers to ceiling suspension members and to supports above with a minimum of three tight turns. Connect hangers directly either to structures or to inserts, eye screws, or other devices that are secure and appropriate for substrate and that will not deteriorate or otherwise fail due to age, corrosion, or elevated temperatures.
5. Do not support ceilings directly from permanent metal forms or floor deck. Fasten hangers to cast-in-place hanger inserts, postinstalled mechanical or adhesive anchors, or power-actuated fasteners that extend through forms into concrete.
6. When steel framing does not permit installation of hanger wires at spacing required, install carrying channels or other supplemental support for attachment of hanger wires.
7. Do not attach hangers to steel deck tabs.
8. Do not attach hangers to steel roof deck. Attach hangers to structural members.
9. Space hangers not more than 48 inches o.c. along each member supported directly from hangers, unless otherwise indicated; provide hangers not more than 8 inches from ends of each member.
10. Size supplemental suspension members and hangers to support ceiling loads within performance limits established by referenced standards and publications.

C. Secure bracing wires to ceiling suspension members and to supports with a minimum of four tight turns. Suspend bracing from building's structural members as required for hangers, without attaching to permanent metal forms, steel deck, or steel deck tabs. Fasten bracing wires into concrete with cast-in-place or postinstalled anchors.

D. Install edge moldings and trim of type indicated at perimeter of acoustical ceiling area and where necessary to conceal edges of acoustical panels.

1. Apply acoustical sealant in a continuous ribbon concealed on back of vertical legs of moldings before they are installed.
2. Screw attach moldings to substrate at intervals not more than 16 inches o.c. and not more than 3 inches from ends, leveling with ceiling suspension system to a tolerance of 1/8 inch in 12 feet. Miter corners accurately and connect securely.
3. Do not use exposed fasteners, including pop rivets, on moldings and trim.

E. Install suspension system runners so they are square and securely interlocked with one another. Remove and replace dented, bent, or kinked members.

F. Install acoustical panels with undamaged edges and fit accurately into suspension system runners and edge moldings. Scribe and cut panels at borders and penetrations to provide a neat, precise fit.

1. Arrange directionally patterned acoustical panels as follows:

   a. Install panels in a basket-weave pattern.

2. For square-edged panels, install panels with edges fully hidden from view by flanges of suspension system runners and moldings.
3. For reveal-edged panels on suspension system runners, install panels with bottom of reveal in firm contact with top surface of runner flanges.
4. For reveal-edged panels on suspension system members with box-shaped flanges, install panels with reveal surfaces in firm contact with suspension system surfaces and panel faces flush with bottom face of runners.
5. Paint cut edges of panel remaining exposed after installation; match color of exposed panel surfaces using coating recommended in writing for this purpose by acoustical panel manufacturer.

## 3.4 FIELD QUALITY CONTROL

A. Tests and Inspections: Testing and inspecting of completed installations of acoustical panel ceiling hangers and anchors and fasteners shall take place in successive stages, in areas of extent and using methods as follows. Do not proceed with installations of acoustical panel ceiling hangers for the next area until test results for previously completed installations of acoustical panel ceiling hangers show compliance with requirements.

1. Extent of Each Test Area: When installation of ceiling suspension systems on each floor has reached 20 percent completion but no panels have been installed.

   a. Within each test area, testing agency will select 1 of every 10 power-actuated fasteners and postinstalled anchors used to attach hangers to concrete and will test them for 200 lbf (890 N) of tension; it will also select one of every 2 postinstalled anchors used to attach bracing wires to concrete and will test them for 440 lbf of tension.
   b. When testing discovers fasteners and anchors that do not comply with requirements, testing agency will test those anchors not previously tested until 20 pass consecutively and then will resume initial testing frequency.

B. Remove and replace acoustical panel ceiling hangers and anchors and fasteners that do not pass tests and inspections and retest as specified above.

## 3.5 CLEANING

A. Clean exposed surfaces of acoustical panel ceilings, including trim, edge moldings, and suspension system members. Comply with manufacturer's written instructions for cleaning and touchup of minor finish damage. Remove and replace ceiling components that cannot be successfully cleaned and repaired to permanently eliminate evidence of damage.

**END OF SECTION 095113**

**SECTION 096513 - RESILIENT BASE AND ACCESSORIES**

PART 1 - GENERAL

1.1 RELATED DOCUMENTS

A. Drawings and general provisions of the Contract, including General and Supplementary Conditions and Division 01 Specification Sections, apply to this Section.

1.2 SUMMARY

A. Section Includes:

1. Resilient base.

B. Related Sections:

1. Division 03 Section "Polished Concrete".
2. Division 04 Section "Masonry".
3. Division 06 Section “Interior Architectural Woodwork”.
4. Division 09 Section "Gypsum Wallboard".

1.3 SUBMITTALS

A. Product Data: For each type of product indicated.

B. Samples for Verification: For each type of product indicated, in manufacturer's standard-size Samples but not less than 12 inches long, of each resilient product color, texture, and pattern required.

1.4 QUALITY ASSURANCE

A. Fire-Test-Response Characteristics: As determined by testing identical products according to ASTM E 648 or NFPA 253 by a qualified testing agency.

1. Critical Radiant Flux Classification: Class I, not less than 0.45 W/sq. cm.

1.5 DELIVERY, STORAGE, AND HANDLING

A. Store resilient products and installation materials in dry spaces protected from the weather, with ambient temperatures maintained within range recommended by manufacturer, but not less than 50 deg F or more than 90 deg F.

1.6 PROJECT CONDITIONS

A. Maintain ambient temperatures within range recommended by manufacturer, but not less than 70 deg F or more than 95 deg F, in spaces to receive resilient products during the following time periods:

1. 48 hours before installation.
2. During installation.
3. 48 hours after installation.

B. Until Substantial Completion, maintain ambient temperatures within range recommended by manufacturer, but not less than 55 deg F or more than 95 deg F.

C. Install resilient products after other finishing operations, including painting, have been completed.

1.7 EXTRA MATERIALS

A. Furnish extra materials that match products installed and that are packaged with protective covering for storage and identified with labels describing contents.

1. Furnish not less than 10 linear feet for every 500 linear feet or fraction thereof, of each type, color, pattern, and size of resilient product installed.

PART 2 - PRODUCTS

2.1 RESILIENT BASE

A. Resilient Base:

1. Manufacturers: Subject to compliance with requirements, available manufacturers offering products that may be incorporated into the Work include, but are not limited to, the following:

a. Johnsonite.
b. Armstrong World Industries, Inc.
c. Mondo Rubber International, Inc.
d. Roppe Corporation, USA.

B. Resilient Base Standard: ASTM F 1861.

1. Material Requirement: Type TS (rubber, vulcanized thermoset).
2. Manufacturing Method: Group I (solid, homogeneous).
3. Style: Mandalay MW-20-H.

C. Minimum Thickness: 0.125 inch .

D. Height: 4 inches or 6 inches as indicated on Drawings.

E. Lengths: Coils in manufacturer's standard length.

F. Outside Corners: Job formed.

G. Inside Corners: Job formed.

H. Finish: Satin or Low luster .

I. Colors and Patterns: “Johnsonite, Clay”.

J. Resilient Base Standard: ASTM F 1861.

2.2 INSTALLATION MATERIALS

A. Adhesives: Water-resistant type recommended by manufacturer to suit resilient products and substrate conditions indicated.

PART 3 - EXECUTION

3.1 EXAMINATION

A. Examine substrates, with Installer present, for compliance with requirements for maximum moisture content and other conditions affecting performance of the Work.

B. Verify that finishes of substrates comply with tolerances and other requirements specified in other Sections and that substrates are free of cracks, ridges, depressions, scale, and foreign deposits that might interfere with adhesion of resilient products.

C. Proceed with installation only after unsatisfactory conditions have been corrected.

3.2 PREPARATION

A. Prepare substrates according to manufacturer's written instructions to ensure adhesion of resilient products.

B. Concrete Substrates for Resilient Stair Treads and Accessories: Prepare according to ASTM F 710.

1. Verify that substrates are dry and free of curing compounds, sealers, and hardeners.
2. Remove substrate coatings and other substances that are incompatible with adhesives and that contain soap, wax, oil, or silicone, using mechanical methods recommended by manufacturer. Do not use solvents.
3. Alkalinity and Adhesion Testing: Perform tests recommended by manufacturer.
4. Moisture Testing: Perform tests recommended by manufacturer. Proceed with installation only after substrates pass testing.

C. Fill cracks, holes, and depressions in substrates with trowelable leveling and patching compound and remove bumps and ridges to produce a uniform and smooth substrate.

D. Do not install resilient products until they are same temperature as the space where they are to be installed.

1. Move resilient products and installation materials into spaces where they will be installed at least 48 hours in advance of installation.

E. Sweep and vacuum clean substrates to be covered by resilient products immediately before installation.

3.3 RESILIENT BASE INSTALLATION

A. Comply with manufacturer's written instructions for installing resilient base.

B. Apply resilient base to walls, columns, pilasters, casework and cabinets in toe spaces, and other permanent fixtures in rooms and areas where base is required.

C. Install resilient base in lengths as long as practicable without gaps at seams and with tops of adjacent pieces aligned.

D. Tightly adhere resilient base to substrate throughout length of each piece, with base in continuous contact with horizontal and vertical substrates.

E. Do not stretch resilient base during installation.

F. On masonry surfaces or other similar irregular substrates, fill voids along top edge of resilient base with manufacturer's recommended adhesive filler material.

G. Job-Formed Corners:

1. Outside Corners: Use straight pieces of maximum lengths possible. Form without producing discoloration (whitening) at bends.
2. Inside Corners: Use straight pieces of maximum lengths possible.

3.4 CLEANING AND PROTECTION

A. Comply with manufacturer's written instructions for cleaning and protection of resilient products.

B. Perform the following operations immediately after completing resilient product installation:

1. Remove adhesive and other blemishes from exposed surfaces.
2. Sweep and vacuum surfaces thoroughly.
3. Damp-mop surfaces to remove marks and soil.

C. Protect resilient products from mars, marks, indentations, and other damage from construction operations and placement of equipment and fixtures during remainder of construction period.

**END OF SECTION 096513**

**SECTION 099113 - EXTERIOR PAINTING**

PART 1 - GENERAL

1.1 RELATED DOCUMENTS

A. Drawings and general provisions of the Contract, including General and Supplementary Conditions and Division 1 Specification Sections, apply to this Section.

1.2 SUMMARY

A. This Section includes surface preparation and the application of paint systems on the following exterior substrates:

1. Steel.
2. Galvanized metal.
3. PVC Pipe as noted.
4. Hardi-Panel.

B. Related Sections include the following:

1. Division 5 Sections for shop priming of metal substrates with primers specified in this Section.
2. Division 8 Sections for factory priming windows and doors with primers specified in this Section.
3. Division 9 Section "Interior Painting" for surface preparation and the application of paint systems on interior substrates.
4. Division 9 Section "Wood Stains and Transparent Finishes" for surface preparation and the application of wood stains and transparent finishes on exterior wood substrates.

1.3 SUBMITTALS

A. Product Data: For each type of product indicated.

B. Samples for Initial Selection: For each type of topcoat product indicated.

C. Samples for Verification: For each type of paint system and each color and gloss of topcoat indicated.

1. Submit Samples on rigid backing, 8 inches square.
2. Step coats on Samples to show each coat required for system.
3. Label each coat of each Sample.
4. Label each Sample for location and application area.

D. Mockups: Apply benchmark samples of each paint system indicated and each color and finish selected to verify preliminary selections made under sample submittals and to demonstrate aesthetic effects and set quality standards for materials and execution.

1. Architect will select one surface to represent surfaces and conditions for application of each paint system specified in Part 3.

a. Vertical and Horizontal Surfaces: Provide samples of at least 100 sq. ft. .
b. Other Items: Architect will designate items or areas required.

2. Final approval of color selections will be based on benchmark samples.

   a. If preliminary color selections are not approved, apply additional benchmark samples of additional colors selected by Architect at no added cost to Owner.

1.4 DELIVERY, STORAGE, AND HANDLING

A. Store materials not in use in tightly covered containers in well-ventilated areas with ambient temperatures continuously maintained at not less than 45 deg F .

1. Maintain containers in clean condition, free of foreign materials and residue.
2. Remove rags and waste from storage areas daily.

1.5 PROJECT CONDITIONS

A. Apply paints only when temperature of surfaces to be painted and ambient air temperatures are between 50 and 95 deg F .

B. Do not apply paints in snow, rain, fog, or mist; when relative humidity exceeds 85 percent; at temperatures less than 5 deg F above the dew point; or to damp or wet surfaces.

PART 2 - PRODUCTS

2.1 MANUFACTURERS

A. In Part 3 Exterior Painting Schedule, the following requirements apply for product selection:

1. Basis-of-Design Product: The design for each paint type is based on the product named. Subject to compliance with requirements, provide either the named product or a comparable product by one of the other manufacturers specified.

B. Manufacturers:

1. Benjamin Moore & Co.
2. Diamond Vogel Paints.
3. ICI Paints.
4. Iowa Paint Manufacturing Company, Inc.
5. PPG Architectural Finishes, Inc.
6. Sherwin-Williams Company (The).
7. Approved Equal

2.2 PAINT, GENERAL

A. Material Compatibility:

1. Provide materials for use within each paint system that are compatible with one another and substrates indicated, under conditions of service and application as demonstrated by manufacturer, based on testing and field experience.
2. For each coat in a paint system, provide products recommended in writing by manufacturers of topcoat for use in paint system and on substrate indicated.

B. Colors: As selected by Architect from manufacturer's full range.

## PART 3 - EXECUTION

### 3.1 EXAMINATION

A. Examine substrates and conditions, with Applicator present, for compliance with requirements for maximum moisture content and other conditions affecting performance of work.

B. Maximum Moisture Content of Substrates: When measured with an electronic moisture meter as follows:

1. Plaster: 12 percent.
2. Gypsum Board: 12 percent.

C. Verify suitability of substrates, including surface conditions and compatibility with existing finishes and primers.

D. Begin coating application only after unsatisfactory conditions have been corrected and surfaces are dry.

1. Beginning coating application constitutes Contractor's acceptance of substrates and conditions.

### 3.2 PREPARATION

A. Comply with manufacturer's written instructions and recommendations in "MPI Architectural Painting Specification Manual" applicable to substrates and paint systems indicated.

B. Remove plates, machined surfaces, and similar items already in place that are not to be painted. If removal is impractical or impossible because of size or weight of item, provide surface-applied protection before surface preparation and painting.

1. After completing painting operations, use workers skilled in the trades involved to reinstall items that were removed. Remove surface-applied protection if any.
2. Do not paint over labels of independent testing agencies or equipment name, identification, performance rating, or nomenclature plates.

C. Clean substrates of substances that could impair bond of paints, including dirt, oil, grease, and incompatible paints and encapsulants.

1. Remove incompatible primers and reprime substrate with compatible primers as required to produce paint systems indicated.

D. Steel Substrates: Remove rust and loose mill scale. Clean using methods recommended in writing by paint manufacturer.

E. Galvanized-Metal Substrates: Remove grease and oil residue from galvanized sheet metal fabricated from coil stock by mechanical methods to produce clean, lightly etched surfaces that promote adhesion of subsequently applied paints.

F. Plaster Substrates: Do not begin paint application until plaster is fully cured and dry.

G. Exterior Gypsum Board Substrates: Do not begin paint application until finishing compound is dry and sanded smooth.

## 3.3 APPLICATION

A. Apply paints according to manufacturer's written instructions.

1. Use applicators and techniques suited for paint and substrate indicated.
2. Paint surfaces behind movable items same as similar exposed surfaces. Before final installation, paint surfaces behind permanently fixed items with prime coat only.

B. Tint each undercoat a lighter shade to facilitate identification of each coat if multiple coats of same material are to be applied. Tint undercoats to match color of topcoat, but provide sufficient difference in shade of undercoats to distinguish each separate coat.

C. If undercoats or other conditions show through topcoat, apply additional coats until cured film has a uniform paint finish, color, and appearance.

D. Apply paints to produce surface films without cloudiness, spotting, holidays, laps, brush marks, roller tracking, runs, sags, ropiness, or other surface imperfections. Cut in sharp lines and color breaks.

## 3.4 FIELD QUALITY CONTROL

A. Testing of Paint Materials: Owner reserves the right to invoke the following procedure at any time and as often as Owner deems necessary during the period when paints are being applied:

1. Owner will engage the services of a qualified testing agency to sample paint materials being used. Samples of material delivered to Project site will be taken, identified, sealed, and certified in presence of Contractor.
2. Testing agency will perform tests for compliance of paint materials with product requirements.
3. Owner may direct Contractor to stop applying paints if test results show materials being used do not comply with product requirements. Contractor shall remove noncomplying-paint materials from Project site, pay for testing, and repaint surfaces painted with rejected materials. Contractor will be required to remove rejected materials from previously painted surfaces if, on repainting with complying materials, the two paints are incompatible.

## 3.5 CLEANING AND PROTECTION

A. At end of each workday, remove rubbish, empty cans, rags, and other discarded materials from Project site.

B. After completing paint application, clean spattered surfaces. Remove spattered paints by washing, scraping, or other methods. Do not scratch or damage adjacent finished surfaces.

C. Protect work of other trades against damage from paint application. Correct damage to work of other trades by cleaning, repairing, replacing, and refinishing, as approved by Architect, and leave in an undamaged condition.

D. At completion of construction activities of other trades, touch up and restore damaged or defaced painted surfaces.

3.6 EXTERIOR PAINTING SCHEDULE

A. Metal (Misc. Iron, Ornamental Iron, Hydrants, Handrails, Ladders):

1. Alkyd System: Semi-Gloss

a. 1st Coat: S-W Metalastic® DTM Acrylic Enamel, B55Z600 Series
b. 2nd Coat: S-W Metalastic® DTM Acrylic Enamel, B55Z600 Series
1) (3-5 mils dry per coat)

B. Galvanized-Metal Substrates (Mesh Panels, Handrails):

1. Alkyd System (Solvent Based): Gloss

a. 1st Coat: S-W Pro-Cryl® Universal W/B Primer, B66-310 Series
1) (5-10 mils wet, 2-4 mils dry)
b. 2nd Coat: S-W All Surface Enamel, A11 Series
c. 3rd Coat: S-W All Surface Enamel, A11 Series
1) (4 mils wet, 1.6 mils dry per coat)

C. PVC Piping.

1. 1st Coat:S-W DTM Acrylic Primer/Finish, B66W1.
a. (6 mils wet, 3 mils dry).
2. 2nd Coat: S-W Duration® Exterior Latex Acrylic Satin Coating, K33 Series.
a. (7 mils wet, 2.8 mils dry per coat)

D. Cementations Surfaces:

1. Latex Over Alkali-Resistant Primer System: Satin Finish

a. 1st Coat: S-W Loxon® Exterior Acrylic Masonry Primer, A24W300
1) (8 mils wet, 3.2 mils dry)
b. 2nd Coat: S-W A-100® Exterior Latex Satin, A82 Series
c. 3rd Coat: S-W A-100® Exterior Latex Satin, A82 Series
1) (4 mils wet, 1.4 mils dry per coat)

**END OF SECTION 099113**

**SECTION 099123 - INTERIOR PAINTING**

PART 1 - GENERAL

1.1 RELATED DOCUMENTS

A. Drawings and general provisions of the Contract, including General and Supplementary Conditions and Division 1 Specification Sections, apply to this Section.

1.2 SUMMARY

A. This Section includes surface preparation and the application of paint systems on the following interior substrates:

1. Concrete masonry units (CMU).
2. Steel.
3. Wood.
4. Gypsum board.

B. Related Sections include the following:

1. Division 5 Sections for shop priming of metal substrates with primers specified in this Section.
2. Division 6 Sections for shop priming carpentry with primers specified in this Section.
3. Division 8 Sections for factory priming windows and doors with primers specified in this Section.
4. Division 9 Section "Exterior Painting" for surface preparation and the application of paint systems on exterior substrates.

1.3 SUBMITTALS

A. Product Data: For each type of product indicated.

B. Samples for Initial Selection: For each type of topcoat product indicated.

C. Samples for Verification: For each type of paint system and in each color and gloss of topcoat indicated.

1. Submit Samples on rigid backing, 8 inches square.
2. Step coats on Samples to show each coat required for system.
3. Label each coat of each Sample.
4. Label each Sample for location and application area.

D. Mockups: Apply benchmark samples of each paint system indicated and each color and finish selected to verify preliminary selections made under sample submittals and to demonstrate aesthetic effects and set quality standards for materials and execution.

1. Architect will select one surface to represent surfaces and conditions for application of each paint system specified in Part 3.

a. Wall and Ceiling Surfaces: Provide samples of at least 100 sq. ft.
b. Other Items: Architect will designate items or areas required.

2. Apply benchmark samples after permanent lighting and other environmental services have been activated.
3. Final approval of color selections will be based on benchmark samples.

    a. If preliminary color selections are not approved, apply additional benchmark samples of additional colors selected by Architect at no added cost to Owner.

1.4 DELIVERY, STORAGE, AND HANDLING

A. Store materials not in use in tightly covered containers in well-ventilated areas with ambient temperatures continuously maintained at not less than 45 deg F .

1. Maintain containers in clean condition, free of foreign materials and residue.
2. Remove rags and waste from storage areas daily.

1.5 PROJECT CONDITIONS

A. Apply paints only when temperature of surfaces to be painted and ambient air temperatures are between 50 and 95 deg F .

B. Do not apply paints when relative humidity exceeds 85 percent; at temperatures less than 5 deg F above the dew point; or to damp or wet surfaces.

PART 2 - PRODUCTS

2.1 MANUFACTURERS

A. In Part 3 Interior Painting Schedule, the following requirements apply for product selection:

1. Basis-of-Design Product: The design for each paint type is based on the product named. Subject to compliance with requirements, provide either the named product or a comparable product by one of the other manufacturers specified.

B. Manufacturers:

1. Benjamin Moore & Co.
2. California Paints.
3. Columbia Paint & Coatings.
4. Coronado Paint.
5. Diamond Vogel Paints.
6. ICI Paints.
7. Iowa Paint Manufacturing Company, Inc.
8. Kelly-Moore Paints.
9. Kwal-Howells Paint.
10. PPG Architectural Finishes, Inc.
11. Sherwin-Williams Company (The).

2.2 PAINT, GENERAL

A. Material Compatibility:

1. Provide materials for use within each paint system that are compatible with one another and substrates indicated, under conditions of service and application as demonstrated by manufacturer, based on testing and field experience.
2. For each coat in a paint system, provide products recommended in writing by manufacturers of topcoat for use in paint system and on substrate indicated.

B. Colors: As selected by Architect from manufacturer's full range.

PART 3 - EXECUTION

3.1 EXAMINATION

A. Examine substrates and conditions, with Applicator present, for compliance with requirements for maximum moisture content and other conditions affecting performance of work.

B. Maximum Moisture Content of Substrates: When measured with an electronic moisture meter as follows:

1. Masonry (Clay and CMU): 12 percent.
2. Wood: 15 percent.
3. Gypsum Board: 12 percent.
4. Plaster: 12 percent.

C. Verify suitability of substrates, including surface conditions and compatibility with existing finishes and primers.

D. Begin coating application only after unsatisfactory conditions have been corrected and surfaces are dry.

1. Beginning coating application constitutes Contractor's acceptance of substrates and conditions.

3.2 PREPARATION

A. Comply with manufacturer's written instructions and recommendations in "MPI Architectural Painting Specification Manual" applicable to substrates indicated.

B. Remove plates, machined surfaces, and similar items already in place that are not to be painted. If removal is impractical or impossible because of size or weight of item, provide surface-applied protection before surface preparation and painting.

1. After completing painting operations, use workers skilled in the trades involved to reinstall items that were removed. Remove surface-applied protection if any.
2. Do not paint over labels of independent testing agencies or equipment name, identification, performance rating, or nomenclature plates.

C. Clean substrates of substances that could impair bond of paints, including dirt, oil, grease, and incompatible paints and encapsulants.

1. Remove incompatible primers and reprime substrate with compatible primers as required to produce paint systems indicated.

D. Clay Masonry Substrates: Remove efflorescence and chalk. Do not paint surfaces if moisture content of surfaces or alkalinity of mortar joints to be painted exceed that permitted in manufacturer's written instructions.

E. Concrete Masonry Substrates: Remove efflorescence and chalk. Do not paint surfaces if moisture content or alkalinity of surfaces to be painted exceeds that permitted in manufacturer's written instructions.

F. Steel Substrates: Remove rust and loose mill scale. Clean using methods recommended in writing by paint manufacturer.

G. Wood Substrates:

1. Scrape and clean knots, and apply coat of knot sealer before applying primer.
2. Sand surfaces that will be exposed to view, and dust off.
3. Prime edges, ends, faces, undersides, and backsides of wood.
4. After priming, fill holes and imperfections in the finish surfaces with putty or plastic wood filler. Sand smooth when dried.

H. Gypsum Board Substrates: Do not begin paint application until finishing compound is dry and sanded smooth.

I. Plaster Substrates: Do not begin paint application until plaster is fully cured and dry.

## 3.3 APPLICATION

A. Apply paints according to manufacturer's written instructions.

1. Use applicators and techniques suited for paint and substrate indicated.
2. Paint surfaces behind movable equipment and furniture same as similar exposed surfaces. Before final installation, paint surfaces behind permanently fixed equipment or furniture with prime coat only.
3. Paint front and backsides of access panels, removable or hinged covers, and similar hinged items to match exposed surfaces.

B. Tint each undercoat a lighter shade to facilitate identification of each coat if multiple coats of same material are to be applied. Tint undercoats to match color of topcoat, but provide sufficient difference in shade of undercoats to distinguish each separate coat.

C. If undercoats or other conditions show through topcoat, apply additional coats until cured film has a uniform paint finish, color, and appearance.

D. Apply paints to produce surface films without cloudiness, spotting, holidays, laps, brush marks, roller tracking, runs, sags, ropiness, or other surface imperfections. Cut in sharp lines and color breaks.

E. Painting Mechanical and Electrical Work: Paint items exposed in equipment rooms and occupied spaces including, but not limited to, the following:

1. Mechanical Work:

a. Uninsulated metal piping.
b. Uninsulated plastic piping.
c. Pipe hangers and supports.
d. Tanks that do not have factory-applied final finishes.
e. Visible portions of internal surfaces of metal ducts, without liner, behind air inlets and outlets.
f. Duct, equipment, and pipe insulation having cotton or canvas insulation covering or other paintable jacket material.

g. Mechanical equipment that is indicated to have a factory-primed finish for field painting.

2. Electrical Work:

a. Switchgear.
b. Panelboards.
c. Electrical equipment that is indicated to have a factory-primed finish for field painting.

## 3.4 CLEANING AND PROTECTION

A. At end of each workday, remove rubbish, empty cans, rags, and other discarded materials from Project site.

B. After completing paint application, clean spattered surfaces. Remove spattered paints by washing, scraping, or other methods. Do not scratch or damage adjacent finished surfaces.

C. Protect work of other trades against damage from paint application. Correct damage to work of other trades by cleaning, repairing, replacing, and refinishing, as approved by Architect, and leave in an undamaged condition.

D. At completion of construction activities of other trades, touch up and restore damaged or defaced painted surfaces.

## 3.5 INTERIOR PAINTING SCHEDULE

A. CMU Substrates:

1. Latex System: Semi-Gloss
   a. 1st Coat: S-W PrepRite® Block Filler, B25W25
      1) (75-125 sq ft/gal)
   b. 2nd Coat: S-W ProMar® 200 Latex Semi-Gloss, B31W2200 Series
   c. 3rd Coat: S-W ProMar® 200 Latex Semi-Gloss, B31W2200 Series
      1) (4 mils wet, 1.3 mils dry per coat)

B. Steel Substrates (HM Door Frames, Stair and Guardrails):

1. Alkyd System: Semi-Gloss

   a. 1st Coat: S-W All Surface Enamel Oil Primer, A11W210
      1) (4 mils wet, 2.4 mils dry)
   b. 2nd Coat: S-W ProMar® 200 Alkyd Semi-Gloss, B34W200 Series
   c. 3rd Coat: S-W ProMar® 200 Alkyd Semi-Gloss, B34W200 Series
      1) (4 mils wet, 1.7 mils dry per coat)

C. Wood (Doors, Trim, Partitions, Frames):

1. Latex System: Semi-Gloss

   a. 1st Coat: S-W PrepRite® Classic Primer, B28W101
      1) (4 mils wet, 1.6 mils dry)
   b. 2nd Coat: S-W ProMar® 200 Latex Semi-Gloss, B31W2200 Series
   c. 3rd Coat: S-W ProMar® 200 Latex Semi-Gloss, B31W2200 Series
      1) (4 mils wet, 1.3 mils dry per coat)

D. Gypsum Board Substrates:

1. Latex System: Eg-Shel.

a. 1st Coat: S-W PrepRite® 200 Latex Primer, B28W200.
1) (4 mils wet, 1.2 mils dry)

b. 2nd Coat: S-W Duration® Home Latex Satin, B97-100 Series.

c. 3rd Coat: S-W Duration® Home Latex Satin, B97-100 Series

1) (4 mils wet, 1.5 mils dry per coat).

**END OF SECTION 099123**

**SECTION 101400 - SIGNAGE**

PART 1 - GENERAL

1.1 RELATED DOCUMENTS

A. Drawings and general provisions of the Contract, including General and Supplementary Conditions and Division 01 Specification Sections, apply to this Section.

1.2 SUMMARY

A. This Section includes the following:

1. Dimensional characters (Interior and Exterior).
2. Panel signs.

B. Related Sections include the following:

1. Division 04 Section "Unit Masonry" .
2. Division 09 Section "Gypsum Wallboard".

1.3 DEFINITIONS

A. ADA-ABA Accessibility Guidelines: U.S. Architectural & Transportation Barriers Compliance Board's "Americans with Disabilities Act (ADA) Accessibility Guidelines for Buildings and Facilities; Architectural Barriers Act (ABA) Accessibility Guidelines."

1.4 SUBMITTALS

A. Product Data: For each type of product indicated.

B. Shop Drawings: Show fabrication and installation details for signs.

1. Show sign mounting heights, locations of supplementary supports , and accessories.
2. Provide message list, typestyles, graphic element, including tactile characters and Braille, and layout for each sign.

1.5 QUALITY ASSURANCE

A. Fabricator Qualifications: Shop that employs skilled workers who custom-fabricate products similar to those required for this Project and whose products have a record of successful in-service performance.

B. Source Limitations for Signs: Obtain each sign type indicated from one source from a single manufacturer.

C. Regulatory Requirements: Comply with applicable provisions in ADA-ABA Accessibility Guidelines.

D. Electrical Components, Devices, and Accessories: Listed and labeled as defined in NFPA 70, Article 100, by a testing agency acceptable to authorities having jurisdiction, and marked for intended use.

1.6 PROJECT CONDITIONS

A. Weather Limitations: Proceed with installation only when existing and forecasted weather conditions permit installation of signs in exterior locations to be performed according to manufacturers' written instructions and warranty requirements.

B. Field Measurements: Verify recess openings by field measurements before fabrication and indicate measurements on Shop Drawings.

1.7 COORDINATION

A. Coordinate placement of anchorage devices with templates for installing signs.

1.8 WARRANTY

A. Special Warranty: Manufacturer's standard form in which manufacturer agrees to repair or replace components of signs that fail in materials or workmanship within specified warranty period.

1. Failures include, but are not limited to, the following:

a. Deterioration of metal and finishes beyond normal weathering.
b. Deterioration of embedded graphic image colors and sign lamination .

2. Warranty Period: Five years from date of Substantial Completion.

PART 2 - PRODUCTS

2.1 MATERIALS

A. Aluminum Castings: ASTM B 26/B 26M, of alloy and temper recommended by sign manufacturer for casting process used and for use and finish indicated.

B. Aluminum Extrusions: ASTM B 221, alloy and temper recommended by aluminum producer and finisher for type of use and finish indicated, and with at least the strength and durability properties of Alloy 6063-T5.

C. Polycarbonate Sheet: Of thickness indicated, manufactured by extrusion process, coated on both surfaces with abrasion-resistant coating:

1. Impact Resistance: 16 ft-lbf/in. per ASTM D 256, Method A.
2. Tensile Strength: 9000 lbf/sq. in. per ASTM D 638.
3. Flexural Modulus of Elasticity: 340,000 lbf/sq. in. per ASTM D 790.
4. Heat Deflection: 265 deg F at 264 lbf/sq. in. per ASTM D 648.
5. Abrasion Resistance: 1.5 percent maximum haze increase for 100 revolutions of a Taber abraser with a load of 500 g per ASTM D 1044.

## 2.2 DIMENSIONAL CHARACTERS

A. Available Manufacturers: Subject to compliance with requirements, manufacturers offering products that may be incorporated into the Work include, but are not limited to, the following:

1. ASI-Modulex, Inc.
2. Metal Arts; Div. of L&H Mfg. Co.

B. Cast Characters: Produce characters with smooth flat faces, sharp corners, and precisely formed lines and profiles, free of pits, scale, sand holes, and other defects. Cast lugs into back of characters and tap to receive threaded mounting studs. Alloy and temper recommended by sign manufacturer for casting process used and for use and finish indicated. Comply with the following requirements.

1. Character Material: Aluminum.
2. Size:
   a. Interior 6”.
   b. Exterior 12”.
3. Thickness:
   a. ½”.
   b. ¾”
4. Color(s): Anodized, Medium Bronze.
5. Mounting: Stand-off mounted, ¾” from substrates.
6. Comply with all requirements of the Air Force standard UFC-3-120-01.

## 2.3 PANEL SIGNS

A. Available Manufacturers: Subject to compliance with requirements, manufacturers offering products that may be incorporated into the Work include, but are not limited to, the following:

1. ASI-Modulex, Inc.
2. Innerface Sign Systems, Inc.

B. Interior Panel Signs: Provide smooth sign panel surfaces constructed to remain flat under installed conditions within a tolerance of plus or minus 1/16 inch measured diagonally from corner to corner, complying with the following requirements:

1. Laminated, Polycarbonate-Faced Sheet: 0.060-inch- thick, polycarbonate face sheet laminated to each side of 0.394-inch- thick phenolic backing.
2. Edge Condition: Beveled.
3. Corner Condition: Squared.
4. Mounting: Unframed.

   a. Wall mounted with two-face tape.

5. Color: Brown with white letters..
6. Tactile Characters: Grade 2 Braille raised 1/32 inch above surface with contrasting colors.
7. Comply with all requirements of Air Force Standard UFC-3-120-01.

C. Engraved Copy: Machine engrave letters, numbers, symbols, and other graphic devices into panel sign on face indicated to produce precisely formed copy, incised to uniform depth.

1. Engraved Plastic : Engrave through exposed face ply of plastic sheet to expose contrasting core ply.

## 2.4 ACCESSORIES

A. Anchors and Inserts: Provide nonferrous-metal or hot-dip galvanized anchors and inserts for exterior installations and elsewhere as required for corrosion resistance. Use toothed steel or lead expansion-bolt devices for drilled-in-place anchors. Furnish inserts, as required, to be set into concrete or masonry work.

## 2.5 FABRICATION

A. General: Provide manufacturer's standard signs of configurations indicated.

1. Welded Connections: Comply with AWS standards for recommended practices in shop welding. Provide welds behind finished surfaces without distortion or discoloration of exposed side. Clean exposed welded surfaces of welding flux and dress exposed and contact surfaces.
2. Mill joints to tight, hairline fit. Form joints exposed to weather to exclude water penetration.
3. Preassemble signs in the shop to greatest extent possible. Disassemble signs only as necessary for shipping and handling limitations. Clearly mark units for reassembly and installation, in location not exposed to view after final assembly.
4. Conceal fasteners if possible; otherwise, locate fasteners where they will be inconspicuous.

## 2.6 FINISHES, GENERAL

A. Comply with NAAMM's "Metal Finishes Manual for Architectural and Metal Products" for recommendations for applying and designating finishes.

B. Protect mechanical finishes on exposed surfaces from damage by applying a strippable, temporary protective covering before shipping.

C. Appearance of Finished Work: Variations in appearance of abutting or adjacent pieces are acceptable if they are within one-half of the range of approved Samples. Noticeable variations in the same piece are not acceptable. Variations in appearance of other components are acceptable if they are within the range of approved Samples and are assembled or installed to minimize contrast.

## 2.7 ALUMINUM FINISHES

A. Color Anodic Finish: Manufacturer's standard Class 1 integrally colored or electrolytically deposited color anodic coating, 0.018 mm or thicker, in medium bronze applied over a satin mechanical finish, complying with AAMA 611.

# PART 3 - EXECUTION

## 3.1 EXAMINATION

A. Examine substrates, areas, and conditions, with Installer present, for compliance with requirements for installation tolerances and other conditions affecting performance of work.

B. Verify that items, including anchor inserts, are sized and located to accommodate signs.

C. Proceed with installation only after unsatisfactory conditions have been corrected.

## 3.2 INSTALLATION

A. Locate signs and accessories where indicated, using mounting methods of types described and complying with manufacturer's written instructions.

1. Install signs level, plumb, and at heights indicated, with sign surfaces free of distortion and other defects in appearance.
2. Interior Wall Signs: Install signs on walls adjacent to latch side of door where applicable. Where not indicated or possible, such as double doors, install signs on nearest adjacent walls. Locate to allow approach within 3 inches of sign without encountering protruding objects or standing within swing of door.

B. Wall-Mounted Signs: Comply with sign manufacturer's written instructions except where more stringent requirements apply.

1. Two-Face Tape: Mount signs to smooth, nonporous surfaces. Do not use this method for vinyl-covered or rough surfaces.

C. Bracket-Mounted Signs: Provide manufacturer's standard brackets, fittings, and hardware for mounting signs that project at right angles from walls and ceilings. Attach brackets and fittings securely to walls and ceilings with concealed fasteners and anchoring devices to comply with manufacturer's written instructions.

D. Dimensional Characters: Mount characters using standard fastening methods to comply with manufacturer's written instructions for character form, type of mounting, wall construction, and condition of exposure indicated. Provide heavy paper template to establish character spacing and to locate holes for fasteners.

1. Projected Mounting: Mount characters at projection distance from wall surface indicated.

## 3.3 CLEANING AND PROTECTION

A. After installation, clean soiled sign surfaces according to manufacturer's written instructions. Protect signs from damage until acceptance by Owner.

**END OF SECTION 101400**

# SECTION 102800 - TOILET AND BATH ACCESSORIES

## PART 1 - GENERAL

### 1.1 RELATED DOCUMENTS

A. Drawings and general provisions of the Contract, including General and Supplementary Conditions and Division 1 Specification Sections, apply to this Section.

B. Individual tenant selection output based on Condo Tenant Selection Software.

### 1.2 SUMMARY

A. This Section includes the following:

1. Bathroom accessories.

B. Related Sections include the following:

1. Division 06 Section “Rough Carpentry” for blocking.

2. Division 09 Section "Ceramic Tile" for ceramic toilet and bath accessories.

### 1.3 SUBMITTALS

A. Product Data: For each type of product indicated. Include the following:

1. Construction details and dimensions.
2. Anchoring and mounting requirements, including requirements for cutouts in other work and substrate preparation.
3. Material and finish descriptions.
4. Features that will be included for Project.
5. Manufacturer's warranty.

B. Product Schedule: Indicating types, quantities, sizes, and installation locations by room of each accessory required.

1. Identify locations using room designations indicated on Drawings.
2. Identify products using designations indicated on Drawings.

### 1.4 COORDINATION

A. Coordinate with Owner for Owner provided accessories and installation requirements.

B. Coordinate accessory locations with other work to prevent interference with clearances required for access by people with disabilities, and for proper installation, adjustment, operation, cleaning, and servicing of accessories.

C. Deliver inserts and anchoring devices set into concrete or masonry as required to prevent delaying the Work.

PART 2 - PRODUCTS

2.1 MATERIALS

A. Stainless Steel: ASTM A 666, Type 304, 0.0312-inch minimum nominal thickness, unless otherwise indicated.

B. Brass: ASTM B 19 flat products; ASTM B 16 , rods, shapes, forgings, and flat products with finished edges; or ASTM B 30, castings.

C. Steel Sheet: ASTM A 1008/A 1008M, Designation CS (cold rolled, commercial steel), 0.0359-inch minimum nominal thickness.

D. Galvanized Steel Sheet: ASTM A 653/A 653M, with G60 hot-dip zinc coating.

E. Galvanized Steel Mounting Devices: ASTM A 153/A 153M, hot-dip galvanized after fabrication.

F. Fasteners: Screws, bolts, and other devices of same material as accessory unit and tamper-and-theft resistant where exposed, and of galvanized steel where concealed.

G. Chrome Plating: ASTM B 456, Service Condition Number SC 2 (moderate service).

2.2 BATHROOM ACCESSORIES

A. Basis-of-Design Product: The design for accessories is based on products indicated. Subject to compliance with requirements, provide the named product.

B. GB-1: Grab Bar.

1. Basis-of-Design Product:
   a. Standard: Bobrick 6806
   b. Satin Stainless Steel 304.
   c. Length: 30 inches.

C. GB-2: Toilet Tissue Roll Holder.

1. Basis-of-Design Product:
   a. Standard: Bobrick 6806.
   b. Satin Stainless Steel 304.
   c. Length: 42 inches.

D. Owner provided Equipment.

1. Toilet Paper Dispenser.
2. Paper Towel Dispenser.
3. Soap Dispenser.

2.3 FABRICATION

A. General: Fabricate units with tight seams and joints, and exposed edges rolled. Hang doors and access panels with full-length, continuous hinges. Equip units for concealed anchorage and with corrosion-resistant backing plates.

PART 3 - EXECUTION

3.1 INSTALLATION

A. Install accessories according to manufacturers' written instructions, using fasteners appropriate to substrate indicated and recommended by unit manufacturer. Install units level, plumb, and firmly anchored in locations and at heights indicated.

B. Provide backing as recommended by accessory manufacturer and as noted on project drawings.

3.2 ADJUSTING AND CLEANING

A. Adjust accessories for unencumbered, smooth operation. Replace damaged or defective items.

B. Remove temporary labels and protective coatings.

C. Clean and polish exposed surfaces according to manufacturer's written recommendations.

**END OF SECTION 102800**

**SECTION 104413 - FIRE EXTINGUISHER CABINETS**

PART 1 - GENERAL

1.1 RELATED DOCUMENTS

A. Drawings and general provisions of the Contract, including General and Supplementary Conditions and Division 01 Specification Sections, apply to this Section.

1.2 SUMMARY

A. Section Includes:

1. Fire protection cabinets for the following:

a. Portable fire extinguishers.

B. Related Sections:

1. Division 10 Section "Fire Extinguishers."

1.3 QUALITY ASSURANCE

A. Fire-Rated, Fire Protection Cabinets: Listed and labeled to comply with requirements in ASTM E 814 for fire-resistance rating of walls where they are installed.

1.4 COORDINATION

A. Coordinate size of fire protection cabinets to ensure that type and capacity of fire extinguishers indicated are accommodated.

B. Coordinate sizes and locations of fire protection cabinets with wall depths.

PART 2 - PRODUCTS

2.1 MATERIALS

A. Cold-Rolled Steel Sheet: ASTM A 1008/A 1008M, Commercial Steel (CS), Type B.

B. Clear Float Glass: ASTM C 1036, Type I, Class 1, Quality q3, 3 mm thick.

2.2 FIRE PROTECTION CABINET

A. Cabinet Type: Suitable for fire extinguisher.

1. Products: Subject to compliance with requirements, available products that may be incorporated into the Work include, but are not limited to, the following:

    a. J. L. Industries, Inc., a division of Activar Construction Products Group;.
    b. Larsen's Manufacturing Company.

B. Cabinet Construction: 1-hour fire rated, where required.

1. Fire-Rated Cabinets: Construct fire-rated cabinets with double walls fabricated from 0.0428-inch-thick, cold-rolled steel sheet lined with minimum 5/8-inch thick, fire-barrier material. Provide factory-drilled mounting holes.

C. Cabinet Material: Steel sheet.

D. Recessed Cabinet: Cabinet box fully recessed in walls of sufficient depth to suit style of trim indicated; with one-piece combination trim and perimeter door frame overlapping surrounding wall surface with exposed trim face and wall return at outer edge (backbend).

E. Surface-Mounted Cabinet: Cabinet box fully exposed and mounted directly on wall with no trim. Provide where walls are of insufficient depth for semirecessed cabinet installation.

F. Cabinet Trim Material: Steel sheet.

G. Door Material: Steel sheet.

H. Door Style: Vertical duo panel with frame.

I. Door Glazing: Clear float glass.

J. Door Hardware: Manufacturer's standard door-operating hardware of proper type for cabinet type, trim style, and door material and style indicated.

1. Provide manufacturer's standard.
2. Provide manufacturer's standard hinge permitting door to open 180 degrees.

K. Finishes:

1. Manufacturer's standard baked-enamel paint for the following:

    a. Exterior of cabinet door, and trim except for those surfaces indicated to receive another finish.
    b. Interior of cabinet and door.

## 2.3 FABRICATION

A. Fire Protection Cabinets: Provide manufacturer's standard box (tub) with trim, frame, door, and hardware to suit cabinet type, trim style, and door style indicated.

1. Weld joints and grind smooth.
2. Provide factory-drilled mounting holes.
3. Prepare doors and frames to receive locks.
4. Install door locks at factory.

B. Cabinet Doors: Fabricate doors according to manufacturer's standards, from materials indicated and coordinated with cabinet types and trim styles selected.

1. Fabricate door frames with tubular stiles and rails and hollow-metal design, minimum 1/2 inch thick.
2. Miter and weld perimeter door frames.

C. Cabinet Trim: Fabricate cabinet trim in one piece with corners mitered, welded, and ground smooth.

2.4 GENERAL FINISH REQUIREMENTS

A. Comply with NAAMM's "Metal Finishes Manual for Architectural and Metal Products" for recommendations for applying and designating finishes.

B. Protect mechanical finishes on exposed surfaces of fire protection cabinets from damage by applying a strippable, temporary protective covering before shipping.

C. Finish fire protection cabinets after assembly.

D. Appearance of Finished Work: Noticeable variations in same piece are not acceptable. Variations in appearance of adjoining components are acceptable if they are within the range of approved Samples and are assembled or installed to minimize contrast.

2.5 STEEL FINISHES

A. Baked-Enamel or Powder-Coat Finish: Immediately after cleaning and pretreating, apply manufacturer's standard two-coat, baked-on finish consisting of prime coat and thermosetting topcoat. Comply with coating manufacturer's written instructions for applying and baking to achieve a minimum dry film thickness of 2 mils.

PART 3 - EXECUTION

3.1 EXAMINATION

A. Examine walls and partitions for suitable framing depth and blocking where recessed cabinets will be installed.

B. Proceed with installation only after unsatisfactory conditions have been corrected.

3.2 PREPARATION

A. Prepare recesses for fire protection cabinets as required by type and size of cabinet and trim style.

3.3 INSTALLATION

A. General: Install fire protection cabinets in locations and at mounting heights indicated or, if not indicated, at heights indicated below:

1. Fire Protection Cabinets: 54 inches above finished floor to top of cabinet.

B. Fire Protection Cabinets: Fasten cabinets to structure, square and plumb.

1. Unless otherwise indicated, provide recessed fire protection cabinets. If wall thickness is not adequate for recessed cabinets, provide semirecessed fire protection cabinets.
2. Provide inside latch and lock for break-glass panels.

3.4 ADJUSTING AND CLEANING

A. Remove temporary protective coverings and strippable films, if any, as fire protection cabinets are installed unless otherwise indicated in manufacturer's written installation instructions.

B. Adjust fire protection cabinet doors to operate easily without binding. Verify that integral locking devices operate properly.

C. On completion of fire protection cabinet installation, clean interior and exterior surfaces as recommended by manufacturer.

D. Touch up marred finishes, or replace fire protection cabinets that cannot be restored to factory-finished appearance. Use only materials and procedures recommended or furnished by fire protection cabinet and mounting bracket manufacturers.

E. Replace fire protection cabinets that have been damaged or have deteriorated beyond successful repair by finish touchup or similar minor repair procedures.

**END OF SECTION 104413**

**SECTION 104416 - FIRE EXTINGUISHERS**

PART 1 - GENERAL

1.1 RELATED DOCUMENTS

A. Drawings and general provisions of the Contract, including General and Supplementary Conditions and Division 01 Specification Sections, apply to this Section.

1.2 SUMMARY

A. Section includes portable, hand-carried fire extinguishers and mounting brackets for fire extinguishers.

B. Related Sections:

1. Division 10 Section "Fire Extinguisher Cabinets."

1.3 SUBMITTALS

A. Product Data: For each type of product indicated. Include rating and classification, material descriptions, dimensions of individual components and profiles, and finishes for fire extinguisher and mounting brackets.

1.4 QUALITY ASSURANCE

A. NFPA Compliance: Fabricate and label fire extinguishers to comply with NFPA 10, "Portable Fire Extinguishers."

B. Fire Extinguishers: Listed and labeled for type, rating, and classification by an independent testing agency acceptable to authorities having jurisdiction.

1. Provide fire extinguishers approved, listed, and labeled by FMG.

1.5 COORDINATION

A. Coordinate type and capacity of fire extinguishers with fire protection cabinets to ensure fit and function.

1.6 WARRANTY

A. Special Warranty: Manufacturer's standard form in which manufacturer agrees to repair or replace fire extinguishers that fail in materials or workmanship within specified warranty period.

1. Failures include, but are not limited to, the following:

a. Failure of hydrostatic test according to NFPA 10.
b. Faulty operation of valves or release levers.

2. Warranty Period: Three years from date of Substantial Completion.

## PART 2 - PRODUCTS

### 2.1 PORTABLE, HAND-CARRIED FIRE EXTINGUISHERS

A. Fire Extinguishers: Type, size, and capacity for each fire protection cabinet and mounting bracket indicated.

1. Manufacturers: Subject to compliance with requirements, available manufacturers offering products that may be incorporated into the Work include, but are not limited to, the following:

a. J. L. Industries, Inc.; a division of Activar Construction Products Group.
b. Larsen's Manufacturing Company.

B. Multipurpose Dry-Chemical Type in Steel Container : UL-rated 4-A:60-B:C, 10-lb nominal capacity, with monoammonium phosphate-based dry chemical in enameled-steel container.

### 2.2 MOUNTING BRACKETS

A. Mounting Brackets: Manufacturer's standard steel, designed to secure fire extinguisher to wall or structure, of sizes required for types and capacities of fire extinguishers indicated, with plated or red baked-enamel finish.

1. Manufacturers: Subject to compliance with requirements, available manufacturers offering products that may be incorporated into the Work include, but are not limited to, the following:

a. J. L. Industries, Inc.; a division of Activar Construction Products Group.
b. Larsen's Manufacturing Company.

B. Identification: Lettering complying with authorities having jurisdiction for letter style, size, spacing, and location. Locate as indicated by Architect.

1. Identify bracket-mounted fire extinguishers with the words "FIRE EXTINGUISHER" in red letter decals applied to mounting surface.

a. Orientation: Vertical.

## PART 3 - EXECUTION

### 3.1 EXAMINATION

A. Examine fire extinguishers for proper charging and tagging.

1. Remove and replace damaged, defective, or undercharged fire extinguishers.

B. Proceed with installation only after unsatisfactory conditions have been corrected.

3.2 INSTALLATION

A. General: Install fire extinguishers and mounting brackets in locations indicated and in compliance with requirements of authorities having jurisdiction.

1. Mounting Brackets: 54 inches above finished floor to top of fire extinguisher.

B. Mounting Brackets: Fasten mounting brackets to surfaces, square and plumb, at locations indicated.

**END OF SECTION 104416**

**SECTION 113100 - EQUIPMENT**

PART 1 - GENERAL

1.1 RELATED DOCUMENTS

A. Drawings and general provisions of the Contract, including General and Supplementary Conditions and Division 01 Specification Sections, apply to this Section.

1.2 SUMMARY

A. This Section includes the following:

1. Owner Furnished equipment for installation under this contract.

2. Contractor Furnished and installed Microwave.

3. Equipment delivery schedule.

B. Owner-Furnished Equipment:

1. Exam Tables ( 2 ea.).
   a. Room # 116 and 118.

2. Wet Exam Tables (1 ea.).
   a. Room # 111.

3. X-Ray Tables (1 ea.).
   a. Room # 106.

4. Surgery Tables (1 ea.).
   a. Room # 112.

5. Overhead Surgery Light (1 ea.).
   a. Room # 112.

6. Washer & Dryer (1 ea.).
   a. Room # 107.

7. Microwave (1 ea.), Contractor Furnished and Installed.
   a. Model, GE Model#: JVM1750DMBB or approved equal.
   b. Room #117.

8. Under-counter Refrigerator (3 ea.)
   a. Room # 116, 117 and 118.

C. Related Sections include the following:

1. Division 06 Section "Interior Architectural Woodwork" for custom-made cabinets and plastic-laminate tops that receive residential appliances.

2. Division 22 Section "Domestic Water Piping" for water distribution piping connections to residential appliances.
3. Division 22 Section "Plumbing Fixtures" for kitchen sinks, waste disposers, and instant hot-water dispensers.
4. Division 26 Section "Electrical Power Conductors and Cables" for services and connections to residential appliances.

1.3 QUALITY ASSURANCE

A. Installer Qualifications: An employer of workers trained and approved by manufacturer for installation and maintenance of units required for this Project.

PART 2 - PRODUCTS

2.1 Not Used

PART 3 - EXECUTION

3.1 EXAMINATION

A. Examine conditions, with Installer present, for compliance with requirements for installation tolerances and other conditions affecting performance of work.

B. Examine roughing-in for piping systems to verify actual locations of piping connections before equipment installation.

C. Proceed with installation only after unsatisfactory conditions have been corrected.

3.2 INSTALLATION, GENERAL

A. General: Comply with manufacturer's written instructions.

B. Built-in Equipment: Securely anchor units to supporting cabinets or countertops with concealed fasteners. Verify that clearances are adequate for proper functioning and rough openings are completely concealed.

C. Freestanding Equipment: Place units in final locations after finishes have been completed in each area. Verify that clearances are adequate to properly operate equipment.

D. Utilities: Refer to Divisions 22 and 26 for plumbing and electrical requirements.

3.3 CRITICAL DELIVERY SCHEDULE

A. General: The contractor will provide the Owner with critical delivery dates for each piece of equipment listed in previous portions of the section. Contractor verifies that the dates provided will not interfere in the completion of or critical path of the project schedule. Submit list to Owner within 30 days after the “Notice To Proceed” for ordering and manufacturer deliveries.

1. Exam Tables ( 2 ea.).
   a. Date required on jobsite _____.
2. Wet Exam Table (1 ea.).
   a. Date required on jobsite _____.
3. X-Ray Table (1 ea.).
   a. Date required on jobsite _____.
4. Surgery Table (1 ea.).
   a. Date required on jobsite _____.
5. Overhead Surgery Light (1 ea.).
   a. Date required on jobsite _____.
6. Washer & Dryer (1 ea.).
   a. Date required on jobsite _____.
7. Microwave (1 ea.).
   a. Date required on jobsite **_BY CONTRACTOR_____**.
8. Under-counter Refrigerator (3 ea.).
   a. Date required on jobsite _____.

3.4 CLEANING AND PROTECTION

A. Test each item of residential appliances to verify proper operation. Make necessary adjustments.

B. Verify that accessories required have been furnished and installed.

C. Remove packing material from residential appliances and leave units in clean condition, ready for operation.

3.5 DEMONSTRATION

A. Engage a factory-authorized service representative to train Owner's maintenance personnel to adjust, operate, and maintain residential appliances. Refer to Division 01 Section "Demonstration and Training."

**END OF SECTION 113100**

# SECTION 313116 - TERMITE CONTROL

## PART 1 - GENERAL

### 1.1 RELATED DOCUMENTS

A. Drawings and general provisions of the Contract, including General and Supplementary Conditions and Division 01 Specification Sections, apply to this Section.

### 1.2 SUMMARY

A. Section Includes:

1. Soil treatment with termiticide.

B. Related Sections:

1. Division 03 Section "Concrete".

### 1.3 SUBMITTALS

A. Product Data: For each type of termite control product.

1. Include the EPA-Registered Label for termiticide products.

### 1.4 QUALITY ASSURANCE

A. Regulatory Requirements: Formulate and apply termiticides and termiticide devices according to the EPA-Registered Label.

B. Source Limitations: Obtain termite control products from single manufacturer.

### 1.5 PROJECT CONDITIONS

A. Environmental Limitations: To ensure penetration, do not treat soil that is water saturated or frozen. Do not treat soil while precipitation is occurring. Comply with requirements of the EPA-Registered Label and requirements of authorities having jurisdiction.

B. Coordinate soil treatment application with excavating, filling, grading, and concreting operations. Treat soil under footings, grade beams, and ground-supported slabs before construction.

1.6 WARRANTY

A. Soil Treatment Special Warranty: Manufacturer's standard form, signed by Applicator and Contractor, certifying that termite control work, consisting of applied soil termiticide treatment, will prevent infestation of subterranean termites. If subterranean termite activity or damage is discovered during warranty period, re-treat soil and repair or replace damage caused by termite infestation.

1. Warranty Period: Five years from date of Substantial Completion.

PART 2 - PRODUCTS

2.1 SOIL TREATMENT

A. Termiticide: Provide an EPA-Registered termiticide, complying with requirements of authorities having jurisdiction, in an aqueous solution formulated to prevent termite infestation. Provide quantity required for application at the label volume and rate for the maximum termiticide concentration allowed for each specific use, according to product's EPA-Registered Label.

1. Products: Subject to compliance with requirements, available products that may be incorporated into the Work include, but are not limited to, the following:

a. BASF Corporation, Agricultural Products; Termidor.
b. FMC Corporation, Agricultural Products Group; Prevail.

2. Service Life of Treatment: Soil treatment termiticide that is effective for not less than five years against infestation of subterranean termites.

PART 3 - EXECUTION

3.1 EXAMINATION

A. Examine substrates, areas, and conditions, with Applicator present, for compliance with requirements for moisture content of soil per termiticide label requirements, interfaces with earthwork, slab and foundation work, landscaping, utility installation, and other conditions affecting performance of termite control.

B. Proceed with application only after unsatisfactory conditions have been corrected.

3.2 PREPARATION

A. General: Comply with the most stringent requirements of authorities having jurisdiction and with manufacturer's written instructions for preparation before beginning application of termite control treatment. Remove all extraneous sources of wood cellulose and other edible materials such as wood debris, tree stumps and roots, stakes, formwork, and construction waste wood from soil within and around foundations.

B. Soil Treatment Preparation: Remove foreign matter and impermeable soil materials that could decrease treatment effectiveness on areas to be treated. Loosen, rake, and level soil to be treated except previously compacted areas under slabs and footings. Termiticides may be applied before placing compacted fill under slabs if recommended in writing by termiticide manufacturer.

1. Fit filling hose connected to water source at the site with a backflow preventer, complying with requirements of authorities having jurisdiction.

3.3 APPLICATION, GENERAL

A. General: Comply with the most stringent requirements of authorities having jurisdiction and with manufacturer's EPA-Registered Label for products.

3.4 APPLYING SOIL TREATMENT

A. Application: Mix soil treatment termiticide solution to a uniform consistency. Provide quantity required for application at the label volume and rate for the maximum specified concentration of termiticide, according to manufacturer's EPA-Registered Label, to the following so that a continuous horizontal and vertical termiticidal barrier or treated zone is established around and under building construction. Distribute treatment evenly.

1. Slabs-on-Grade and Basement Slabs: Under ground-supported slab construction, including footings, building slabs, and attached slabs as an overall treatment. Treat soil materials before concrete footings and slabs are placed.

B. Avoid disturbance of treated soil after application. Keep off treated areas until completely dry.

C. Protect termiticide solution, dispersed in treated soils and fills, from being diluted until ground-supported slabs are installed. Use waterproof barrier according to EPA-Registered Label instructions.

D. Post warning signs in areas of application.

E. Reapply soil treatment solution to areas disturbed by subsequent excavation, grading, landscaping, or other construction activities following application.

**END OF SECTION 313116**

# SECTION 323113 - CHAIN LINK FENCES AND GATES

## PART 1 - GENERAL

### 1.1 RELATED DOCUMENTS

A. Drawings and general provisions of the Contract, including General and Supplementary Conditions and Division 01 Specification Sections, apply to this Section.

### 1.2 SUMMARY

A. Section Includes:

1. Chain-link fences.
2. Gates: swing.

B. Related Sections:

1. Division 03 Section "Cast-in-Place Concrete" for cast-in-place concrete post footings.

### 1.3 SUBMITTALS

A. Product Data: For each type of product indicated. Include construction details, material descriptions, dimensions of individual components and profiles, and finishes for chain-link fences and gates.

1. Fence and gate posts, rails, and fittings.
2. Chain-link fabric, reinforcements, and attachments.
3. Gates and hardware.

B. Shop Drawings: Include plans, elevations, sections, details, and attachments to other work. Show accessories, hardware, gate operation, and operational clearances.

### 1.4 PROJECT CONDITIONS

A. Field Measurements: Verify layout information for chain-link fences and gates shown on Drawings in relation to property survey and existing structures. Verify dimensions by field measurements.

### 1.5 WARRANTY

A. Special Warranty: Manufacturer's standard form in which Installer agrees to repair or replace components of chain-link fences and gates that fail in materials or workmanship within specified warranty period.

1. Failures include, but are not limited to, the following:

a. Deterioration of metals, metal finishes, and other materials beyond normal weathering.

2. Warranty Period: Five years from date of Substantial Completion.

PART 2 - PRODUCTS

2.1 CHAIN-LINK FENCE FABRIC

A. General: Provide fabric in one-piece heights measured between top and bottom of outer edge of selvage knuckle or twist. Comply with CLFMI Product Manual and with requirements indicated below:

1. Fabric Height: As indicated on Drawings.
2. Steel Wire Fabric: Wire with a diameter of 0.148 inch .

   a. Mesh Size: 2 inches .
   b. Zinc-Coated Fabric: ASTM A 392, Type II, Class 1, 1.2 oz./sq. ft. with zinc coating applied before weaving.
   c. Coat selvage ends of fabric that is metallic coated before the weaving process with manufacturer's standard clear protective coating.

3. Selvage: Twisted top and knuckled bottom.

2.2 FENCE FRAMING

A. Posts and Rails: Comply with ASTM F 1043 for framing, including rails, braces, and line; terminal; and corner posts. Provide members with minimum dimensions and wall thickness according to ASTM F 1043 or ASTM F 1083 based on the following:

1. Fence Height: As indicated on Drawings.
2. Light Industrial Strength: Material Group IC-L, round steel pipe, electric-resistance-welded pipe.

   a. Line Post: 1.9 inches.
   b. End, Corner and Pull Post: 2.375 inches .

3. Horizontal Framework Members: top and bottom rails complying with ASTM F 1043.

   a. Top Rail: 1.66 inches in diameter.

4. Brace Rails: Comply with ASTM F 1043.
5. Metallic Coating for Steel Framing:

   a. Type A, consisting of not less than minimum 2.0-oz./sq. ft. average zinc coating per ASTM A 123/A 123M.

2.3 SWING GATES

A. General: Comply with ASTM F 900 for gate posts and single swing gate types.

1. Gate Leaf Width: As indicated.
2. Gate Fabric Height: As indicated.

B. Pipe and Tubing:

1. Zinc-Coated Steel: Comply with ASTM F 1043 and ASTM F 1083.
2. Gate Posts: Round tubular steel.
3. Gate Frames and Bracing: Round tubular steel.

C. Frame Corner Construction: assembled with corner fittings.

D. Hardware:

1. Hinges: 360-degree inward and outward swing.
2. Latches permitting operation from both sides of gate with provision for padlocking accessible from both sides of gate.

2.4 FITTINGS

A. General: Comply with ASTM F 626.

B. Tie Wires, Clips, and Fasteners: According to ASTM F 626.

1. Standard Round Wire Ties: For attaching chain-link fabric to posts, rails, and frames, complying with the following:

a. Hot-Dip Galvanized Steel: 0.148-inch- diameter wire.

PART 3 - EXECUTION

3.1 EXAMINATION

A. Examine areas and conditions, with Installer present, for compliance with requirements for a verified survey of property lines and legal boundaries, site clearing, earthwork, pavement work, and other conditions affecting performance of the Work.

1. Do not begin installation before final grading is completed unless otherwise permitted by Architect.

B. Proceed with installation only after unsatisfactory conditions have been corrected.

3.2 PREPARATION

A. Stake locations of fence lines, gates, and terminal posts. Do not exceed intervals of 500 feet or line of sight between stakes. Indicate locations of utilities, lawn sprinkler system, underground structures, benchmarks, and property monuments.

3.3 INSTALLATION, GENERAL

A. Install chain-link fencing to comply with ASTM F 567 and more stringent requirements indicated.

1. Install fencing on established boundary lines inside property line.

## 3.4 CHAIN-LINK FENCE INSTALLATION

A. Post Excavation: Drill or hand-excavate holes for posts to diameters and spacings indicated, in firm, undisturbed soil.

B. Post Setting: Set posts in concrete at indicated spacing into firm, undisturbed soil.

1. Verify that posts are set plumb, aligned, and at correct height and spacing, and hold in position during setting with concrete or mechanical devices.
2. Concrete Fill: Place concrete around posts to dimensions indicated and vibrate or tamp for consolidation. Protect aboveground portion of posts from concrete splatter.

a. Exposed Concrete: Extend 2 inches above grade; shape and smooth to shed water.

C. Terminal Posts: Locate terminal end, corner, and gate posts per ASTM F 567 and terminal pull posts at changes in horizontal or vertical alignment of 30 degrees or more.

D. Line Posts: Space line posts uniformly at 10 feet o.c.

E. Post Bracing and Intermediate Rails: Install according to ASTM F 567, maintaining plumb position and alignment of fencing. Diagonally brace terminal posts to adjacent line posts with truss rods and turnbuckles. Install braces at end and gate posts and at both sides of corner and pull posts.

F. Top Rail: Install according to ASTM F 567, maintaining plumb position and alignment of fencing. Run rail continuously through line post caps, bending to radius for curved runs and terminating into rail end attached to posts or post caps fabricated to receive rail at terminal posts. Provide expansion couplings as recommended in writing by fencing manufacturer.

G. Bottom Rails: Install and secure to posts with fittings.

H. Chain-Link Fabric: Apply fabric to outside of enclosing framework. Leave 2 inches between finish grade or surface and bottom selvage unless otherwise indicated. Pull fabric taut and tie to posts, rails, and tension wires. Anchor to framework so fabric remains under tension after pulling force is released.

I. Tension or Stretcher Bars: Thread through fabric and secure to end, corner, pull, and gate posts with tension bands spaced not more than 15 inches o.c.

J. Tie Wires: Use wire of proper length to firmly secure fabric to line posts and rails. Attach wire at one end to chain-link fabric, wrap wire around post a minimum of 180 degrees, and attach other end to chain-link fabric per ASTM F 626. Bend ends of wire to minimize hazard to individuals and clothing.

1. Maximum Spacing: Tie fabric to line posts at 12 inches o.c. and to braces at 24 inches o.c.

K. Fasteners: Install nuts for tension bands and carriage bolts on the side of the fence opposite the fabric side. Peen ends of bolts or score threads to prevent removal of nuts.

## 3.5 GATE INSTALLATION

A. Install gates according to manufacturer's written instructions, level, plumb, and secure for full opening without interference. Attach fabric as for fencing. Attach hardware using tamper-resistant or concealed means. Install ground-set items in concrete for anchorage. Adjust hardware for smooth operation and lubricate where necessary.

3.6 ADJUSTING

A. Gates: Adjust gates to operate smoothly, easily, and quietly, free of binding, warp, excessive deflection, distortion, nonalignment, misplacement, disruption, or malfunction, throughout entire operational range. Confirm that latches and locks engage accurately and securely without forcing or binding.

**END OF SECTION 323113**

**SECTION 329200 - TURF AND GRASSES**

PART 1 - GENERAL

1.1 RELATED DOCUMENTS

A. Drawings and general provisions of the Contract, including General and Supplementary Conditions and Division 01 Specification Sections, apply to this Section.

1.2 SUMMARY

A. Section Includes:

1. Sodding.

B. Related Sections:

1. Division 31 Section "Site Clearing" for topsoil stripping and stockpiling.

1.3 DEFINITIONS

A. Finish Grade: Elevation of finished surface of planting soil.

B. Planting Soil: Standardized topsoil; existing, native surface topsoil; existing, in-place surface soil; imported topsoil; or manufactured topsoil that is modified with soil amendments and perhaps fertilizers to produce a soil mixture best for plant growth.

C. Subgrade: Surface or elevation of subsoil remaining after excavation is complete, or top surface of a fill or backfill before planting soil is placed.

D. Subsoil: All soil beneath the topsoil layer of the soil profile, and typified by the lack of organic matter and soil organisms.

E. Surface Soil: Soil that is present at the top layer of the existing soil profile at the Project site. In undisturbed areas, the surface soil is typically topsoil, but in disturbed areas such as urban environments, the surface soil can be subsoil.

1.4 SUBMITTALS

A. Product Data: For each type of product indicated.

1.5 QUALITY ASSURANCE

A. Soil-Testing Laboratory Qualifications: An independent laboratory or university laboratory, recognized by the State Department of Agriculture, with the experience and capability to conduct the testing indicated and that specializes in types of tests to be performed.

B. Soil Analysis: For each unamended soil type, furnish soil analysis and a written report by a qualified soil-testing laboratory stating percentages of organic matter; gradation of sand, silt, and clay content; cation exchange capacity; deleterious material; pH; and mineral and plant-nutrient content of the soil.

1. Testing methods and written recommendations shall comply with USDA's Handbook No. 60.
2. The soil-testing laboratory shall oversee soil sampling, with depth, location, and number of samples to be taken per instructions from Architect. A minimum of three representative samples shall be taken from varied locations for each soil to be used or amended for planting purposes.
3. Report suitability of tested soil for turf growth.

a. Based on the test results, state recommendations for soil treatments and soil amendments to be incorporated. State recommendations in weight per 1000 sq. ft. or volume per cu. yd. for nitrogen, phosphorus, and potash nutrients and soil amendments to be added to produce satisfactory planting soil suitable for healthy, viable plants.
b. Report presence of problem salts, minerals, or heavy metals, including aluminum, arsenic, barium, cadmium, chromium, cobalt, lead, lithium, and vanadium. If such problem materials are present, provide additional recommendations for corrective action.

## 1.6 DELIVERY, STORAGE, AND HANDLING

A. Sod: Harvest, deliver, store, and handle sod according to requirements in "Specifications for Turfgrass Sod Materials" and "Specifications for Turfgrass Sod Transplanting and Installation" in TPI's "Guideline Specifications to Turfgrass Sodding." Deliver sod in time for planting within 24 hours of harvesting. Protect sod from breakage and drying.

B. Bulk Materials:

1. Do not dump or store bulk materials near structures, utilities, walkways and pavements, or on existing turf areas or plants.

## 1.7 PROJECT CONDITIONS

A. Weather Limitations: Proceed with planting only when existing and forecasted weather conditions permit planting to be performed when beneficial and optimum results may be obtained. Apply products during favorable weather conditions according to manufacturer's written instructions.

# PART 2 - PRODUCTS

## 2.1 TURFGRASS SOD

A. Turfgrass Sod: Number 1 Quality/Premium, including limitations on thatch, weeds, diseases, nematodes, and insects, complying with "Specifications for Turfgrass Sod Materials" in TPI's "Guideline Specifications to Turfgrass Sodding." Furnish viable sod of uniform density, color, and texture, strongly rooted, and capable of vigorous growth and development when planted.

## 2.2 ORGANIC SOIL AMENDMENTS

A. Compost: Well-composted, stable, and weed-free organic matter, pH range of 5.5 to 8; moisture content 35 to 55 percent by weight; 100 percent passing through 3/4-inch sieve; soluble salt content of 5 to 10

decisiemens/m; not exceeding 0.5 percent inert contaminants and free of substances toxic to plantings; and as follows:

1. Organic Matter Content: 50 to 60 percent of dry weight.
2. Feedstock: Agricultural, food, or industrial residuals; biosolids; yard trimmings; or source-separated or compostable mixed solid waste.

## PART 3 - EXECUTION

### 3.1 EXAMINATION

A. Examine areas to be planted for compliance with requirements and other conditions affecting performance.

1. Verify that no foreign or deleterious material or liquid such as paint, paint washout, concrete slurry, concrete layers or chunks, cement, plaster, oils, gasoline, diesel fuel, paint thinner, turpentine, tar, roofing compound, or acid has been deposited in soil within a planting area.
2. Do not mix or place soils and soil amendments in frozen, wet, or muddy conditions.
3. Suspend soil spreading, grading, and tilling operations during periods of excessive soil moisture until the moisture content reaches acceptable levels to attain the required results.
4. Uniformly moisten excessively dry soil that is not workable and which is too dusty.

B. Proceed with installation only after unsatisfactory conditions have been corrected.

C. If contamination by foreign or deleterious material or liquid is present in soil within a planting area, remove the soil and contamination as directed by Architect and replace with new planting soil.

### 3.2 PREPARATION

A. Protect structures, utilities, sidewalks, pavements, and other facilities, trees, shrubs, and plantings from damage caused by planting operations.

1. Protect grade stakes set by others until directed to remove them.

### 3.3 TURF AREA PREPARATION

A. Limit turf subgrade preparation to areas to be planted.

B. Newly Graded Subgrades: Loosen subgrade to a minimum depth of 4 inches. Remove stones larger than 2 inches in any dimension and sticks, roots, rubbish, and other extraneous matter and legally dispose of them off Owner's property.

1. Apply fertilizer directly to subgrade before loosening.

a. Reduce elevation of planting soil to allow for soil thickness of sod.

C. Finish Grading: Grade planting areas to a smooth, uniform surface plane with loose, uniformly fine texture. Grade to within plus or minus 1/2 inch of finish elevation. Roll and rake, remove ridges, and fill depressions to meet finish grades. Limit finish grading to areas that can be planted in the immediate future.

D. Moisten prepared area before planting if soil is dry. Water thoroughly and allow surface to dry before planting. Do not create muddy soil.

E. Before planting, obtain Architect's acceptance of finish grading; restore planting areas if eroded or otherwise disturbed after finish grading.

## 3.4 SODDING

A. Lay sod within 24 hours of harvesting. Do not lay sod if dormant or if ground is frozen or muddy.

B. Lay sod to form a solid mass with tightly fitted joints. Butt ends and sides of sod; do not stretch or overlap. Stagger sod strips or pads to offset joints in adjacent courses. Avoid damage to subgrade or sod during installation. Tamp and roll lightly to ensure contact with subgrade, eliminate air pockets, and form a smooth surface. Work sifted soil or fine sand into minor cracks between pieces of sod; remove excess to avoid smothering sod and adjacent grass.

1. Lay sod across angle of slopes exceeding 1:3.
2. Anchor sod on slopes exceeding 1:6 with wood pegs spaced as recommended by sod manufacturer but not less than 2 anchors per sod strip to prevent slippage.

C. Saturate sod with fine water spray within two hours of planting. During first week after planting, water daily or more frequently as necessary to maintain moist soil to a minimum depth of 1-1/2 inches below sod.

## 3.5 TURF MAINTENANCE

A. Maintain and establish turf by watering, fertilizing, weeding, mowing, trimming, replanting, and performing other operations as required to establish healthy, viable turf. Roll, regrade, and replant bare or eroded areas and remulch to produce a uniformly smooth turf. Provide materials and installation the same as those used in the original installation.

1. Fill in as necessary soil subsidence that may occur because of settling or other processes. Replace materials and turf damaged or lost in areas of subsidence.
2. In areas where mulch has been disturbed by wind or maintenance operations, add new mulch and anchor as required to prevent displacement.

## 3.6 SATISFACTORY TURF

A. Turf installations shall meet the following criteria as determined by Owner:

1. Satisfactory Sodded Turf: At end of maintenance period, a healthy, well-rooted, even-colored, viable turf has been established, free of weeds, open joints, bare areas, and surface irregularities.

B. Use specified materials to reestablish turf that does not comply with requirements and continue maintenance until turf is satisfactory.

## 3.7 CLEANUP AND PROTECTION

A. Promptly remove soil and debris created by turf work from paved areas. Clean wheels of vehicles before leaving site to avoid tracking soil onto roads, walks, or other paved areas.

B. Erect temporary fencing or barricades and warning signs as required to protect newly planted areas from traffic. Maintain fencing and barricades throughout initial maintenance period and remove after plantings are established.

**END OF SECTION 329200**

**SECTION 329300 - PLANTS**

PART 1 - GENERAL

1.1 RELATED DOCUMENTS

A. Drawings and general provisions of the Contract, including General and Supplementary Conditions and Division 01 Specification Sections, apply to this Section.

1.2 SUMMARY

A. Section Includes:

1. Plants.

B. Related Sections:

1. Division 31 Section "Site Clearing" for protection of existing trees and plantings, topsoil stripping and stockpiling, and site clearing.
2. Division 32 Section "Turf and Grasses" for turf (lawn) and meadow planting, hydroseeding, and erosion-control materials.

1.3 DEFINITIONS

A. Backfill: The earth used to replace or the act of replacing earth in an excavation.

B. Balled and Burlapped Stock: Plants dug with firm, natural balls of earth in which they were grown, with ball size not less than diameter and depth recommended by ANSI Z60.1 for type and size of plant required; wrapped with burlap, tied, rigidly supported, and drum laced with twine with the root flare visible at the surface of the ball as recommended by ANSI Z60.1.

C. Container-Grown Stock: Healthy, vigorous, well-rooted plants grown in a container, with a well-established root system reaching sides of container and maintaining a firm ball when removed from container. Container shall be rigid enough to hold ball shape and protect root mass during shipping and be sized according to ANSI Z60.1 for type and size of plant required.

D. Duff Layer: The surface layer of native topsoil that is composed of mostly decayed leaves, twigs, and detritus.

E. Fabric Bag-Grown Stock: Healthy, vigorous, well-rooted plants established and grown in-ground in a porous fabric bag with well-established root system reaching sides of fabric bag. Fabric bag size is not less than diameter, depth, and volume required by ANSI Z60.1 for type and size of plant.

F. Finish Grade: Elevation of finished surface of planting soil.

G. Manufactured Topsoil: Soil produced off-site by homogeneously blending mineral soils or sand with stabilized organic soil amendments to produce topsoil or planting soil.

H. Pesticide: A substance or mixture intended for preventing, destroying, repelling, or mitigating a pest. This includes insecticides, miticides, herbicides, fungicides, rodenticides, and molluscicides. It also includes substances or mixtures intended for use as a plant regulator, defoliant, or desiccant.

I. Pests: Living organisms that occur where they are not desired, or that cause damage to plants, animals, or people. These include insects, mites, grubs, mollusks (snails and slugs), rodents (gophers, moles, and mice), unwanted plants (weeds), fungi, bacteria, and viruses.

J. Planting Area: Areas to be planted.

K. Planting Soil: Standardized topsoil; existing, native surface topsoil; existing, in-place surface soil; imported topsoil; or manufactured topsoil that is modified with soil amendments and perhaps fertilizers to produce a soil mixture best for plant growth.

L. Plant; Plants; Plant Material: These terms refer to vegetation in general, including trees, shrubs, vines, ground covers, ornamental grasses, bulbs, corms, tubers, or herbaceous vegetation.

M. Root Flare: Also called "trunk flare." The area at the base of the plant's stem or trunk where the stem or trunk broadens to form roots; the area of transition between the root system and the stem or trunk.

N. Stem Girdling Roots: Roots that encircle the stems (trunks) of trees below the soil surface.

O. Subgrade: Surface or elevation of subsoil remaining after excavation is complete, or the top surface of a fill or backfill before planting soil is placed.

P. Subsoil: All soil beneath the topsoil layer of the soil profile, and typified by the lack of organic matter and soil organisms.

Q. Surface Soil: Soil that is present at the top layer of the existing soil profile at the Project site. In undisturbed areas, the surface soil is typically topsoil; but in disturbed areas such as urban environments, the surface soil can be subsoil.

## 1.4 SUBMITTALS

A. Product Data: For each type of product indicated, including soils.

1. Plant Materials: Include quantities, sizes, quality, and sources for plant materials.

## 1.5 QUALITY ASSURANCE

A. Installer Qualifications: A qualified landscape Installer whose work has resulted in successful establishment of plants.

1. Professional Membership: Installer shall be a member in good standing of either the Professional Landcare Network or the American Nursery and Landscape Association.
2. Installer's Field Supervision: Require Installer to maintain an experienced full-time supervisor on Project site when work is in progress.

B. Soil-Testing Laboratory Qualifications: An independent or university laboratory, recognized by the State Department of Agriculture, with the experience and capability to conduct the testing indicated and that specializes in types of tests to be performed.

C. Soil Analysis: For each unamended soil type, furnish soil analysis and a written report by a qualified soil-testing laboratory stating percentages of organic matter; gradation of sand, silt, and clay content; cation exchange capacity; deleterious material; pH; and mineral and plant-nutrient content of the soil.

1. Testing methods and written recommendations shall comply with USDA's Handbook No. 60.
2. The soil-testing laboratory shall oversee soil sampling; with depth, location, and number of samples to be taken per instructions from Architect. A minimum of three representative samples shall be taken from varied locations for each soil to be used or amended for planting purposes.
3. Report suitability of tested soil for plant growth.

a. Based upon the test results, state recommendations for soil treatments and soil amendments to be incorporated. State recommendations in weight per 1000 sq. ft. or volume per cu. yd. for nitrogen, phosphorus, and potash nutrients and soil amendments to be added to produce satisfactory planting soil suitable for healthy, viable plants.
b. Report presence of problem salts, minerals, or heavy metals, including aluminum, arsenic, barium, cadmium, chromium, cobalt, lead, lithium, and vanadium. If such problem materials are present, provide additional recommendations for corrective action.

D. Provide quality, size, genus, species, and variety of plants indicated, complying with applicable requirements in ANSI Z60.1.

1. Selection of plants purchased under allowances will be made by Architect, who will tag plants at their place of growth before they are prepared for transplanting.

E. Measurements: Measure according to ANSI Z60.1. Do not prune to obtain required sizes.

1. Trees and Shrubs: Measure with branches and trunks or canes in their normal position. Take height measurements from or near the top of the root flare for field-grown stock and container grown stock. Measure main body of tree or shrub for height and spread; do not measure branches or roots tip to tip. Take caliper measurements 6 inches above the root flare for trees up to 4-inch caliper size, and 12 inches above the root flare for larger sizes.
2. Other Plants: Measure with stems, petioles, and foliage in their normal position.

## 1.6 DELIVERY, STORAGE, AND HANDLING

A. Packaged Materials: Deliver packaged materials in original, unopened containers showing weight, certified analysis, name and address of manufacturer, and indication of conformance with state and federal laws if applicable.

B. Bulk Materials:

1. Do not dump or store bulk materials near structures, utilities, walkways and pavements, or on existing turf areas or plants.
2. Provide erosion-control measures to prevent erosion or displacement of bulk materials, discharge of soil-bearing water runoff, and airborne dust reaching adjacent properties, water conveyance systems, or walkways.

C. Deliver bare-root stock plants freshly dug. Immediately after digging up bare-root stock, pack root system in wet straw, hay, or other suitable material to keep root system moist until planting.

D. Do not prune trees and shrubs before delivery. Protect bark, branches, and root systems from sun scald, drying, wind burn, sweating, whipping, and other handling and tying damage. Do not bend or bind-tie trees or shrubs in such a manner as to destroy their natural shape. Provide protective covering of plants during shipping and delivery. Do not drop plants during delivery and handling.

E. Handle planting stock by root ball.

F. Store bulbs, corms, and tubers in a dry place at 60 to 65 deg F until planting.

G. Deliver plants after preparations for planting have been completed, and install immediately. If planting is delayed more than six hours after delivery, set plants and trees in their appropriate aspect (sun, filtered sun, or shade), protect from weather and mechanical damage, and keep roots moist.

1. Heel-in bare-root stock. Soak roots that are in dry condition in water for two hours. Reject dried-out plants.
2. Set balled stock on ground and cover ball with soil, peat moss, sawdust, or other acceptable material.
3. Do not remove container-grown stock from containers before time of planting.
4. Water root systems of plants stored on-site deeply and thoroughly with a fine-mist spray. Water as often as necessary to maintain root systems in a moist, but not overly-wet condition.

## 1.7 PROJECT CONDITIONS

A. Field Measurements: Verify actual grade elevations, service and utility locations, irrigation system components, and dimensions of plantings and construction contiguous with new plantings by field measurements before proceeding with planting work.

B. Weather Limitations: Proceed with planting only when existing and forecasted weather conditions permit planting to be performed when beneficial and optimum results may be obtained. Apply products during favorable weather conditions according to manufacturer's written instructions and warranty requirements.

C. Coordination with Turf Areas (Lawns): Plant trees, shrubs, and other plants after finish grades are established and before planting turf areas unless otherwise indicated.

1. When planting trees, shrubs, and other plants after planting turf areas, protect turf areas, and promptly repair damage caused by planting operations.

## 1.8 WARRANTY

A. Special Warranty: Installer agrees to repair or replace plantings and accessories that fail in materials, workmanship, or growth within specified warranty period.

1. Failures include, but are not limited to, the following:

a. Death and unsatisfactory growth, except for defects resulting from abuse, lack of adequate maintenance, or neglect by Owner, or incidents that are beyond Contractor's control.
b. Structural failures including plantings falling or blowing over.
c. Faulty performance of <Insert item>.
d. Deterioration of metals, metal finishes, and other materials beyond normal weathering.

2. Warranty Periods from Date of Planting Completion:

a. Trees, Shrubs, Vines, and Ornamental Grasses: 12 months.
b. Ground Covers, Biennials, Perennials, and Other Plants: 12 months.

3. Include the following remedial actions as a minimum:

a. Immediately remove dead plants and replace unless required to plant in the succeeding planting season.
b. Replace plants that are more than 33 percent dead or in an unhealthy condition at end of warranty period.
c. A limit of one replacement of each plant will be required except for losses or replacements due to failure to comply with requirements.
d. Provide extended warranty for period equal to original warranty period, for replaced plant material.

## PART 2 - PRODUCTS

### 2.1 PLANT MATERIAL

A. General: Furnish nursery-grown plants true to genus, species, variety, cultivar, stem form, shearing, and other features indicated in Plant Schedule or Plant Legend shown on Drawings and complying with ANSI Z60.1; and with healthy root systems developed by transplanting or root pruning. Provide well-shaped, fully branched, healthy, vigorous stock, densely foliated when in leaf and free of disease, pests, eggs, larvae, and defects such as knots, sun scald, injuries, abrasions, and disfigurement.

1. Trees with damaged, crooked, or multiple leaders; tight vertical branches where bark is squeezed between two branches or between branch and trunk ("included bark"); crossing trunks; cut-off limbs more than 3/4 inch in diameter; or with stem girdling roots will be rejected.
2. Collected Stock: Do not use plants harvested from the wild, from native stands, from an established landscape planting, or not grown in a nursery unless otherwise indicated.

B. Provide plants of sizes, grades, and ball or container sizes complying with ANSI Z60.1 for types and form of plants required. Plants of a larger size may be used if acceptable to Architect, with a proportionate increase in size of roots or balls.

C. Root-Ball Depth: Furnish trees and shrubs with root balls measured from top of root ball, which shall begin at root flare according to ANSI Z60.1. Root flare shall be visible before planting.

D. Labeling: Label each plant of each variety, size, and caliper with a securely attached, waterproof tag bearing legible designation of common name and full scientific name, including genus and species. Include nomenclature for hybrid, variety, or cultivar, if applicable for the plant as shown on Drawings.

E. If formal arrangements or consecutive order of plants is shown on Drawings, select stock for uniform height and spread, and number the labels to assure symmetry in planting.

### 2.2 ORGANIC SOIL AMENDMENTS

A. Compost: Well-composted, stable, and weed-free organic matter, pH range of 5.5 to 8; moisture content 35 to 55 percent by weight; 100 percent passing through3/4-inch sieve; soluble salt content of 5 to 10 decisiemens/m; not exceeding 0.5 percent inert contaminants and free of substances toxic to plantings; and as follows:

1. Organic Matter Content: 50 to 60 percent of dry weight.
2. Feedstock: Agricultural, food, or industrial residuals; biosolids; yard trimmings; or source-separated or compostable mixed solid waste.

2.3 MULCHES

A. Organic Mulch: Free from deleterious materials and suitable as a top dressing of trees and shrubs, consisting of one of the following:

1. Type: Wood and bark chips.
2. Size Range: 3 inches maximum, 1/2 inch minimum.
3. Color: Natural.

PART 3 - EXECUTION

3.1 EXAMINATION

A. Examine areas to receive plants for compliance with requirements and conditions affecting installation and performance.

1. Verify that no foreign or deleterious material or liquid such as paint, paint washout, concrete slurry, concrete layers or chunks, cement, plaster, oils, gasoline, diesel fuel, paint thinner, turpentine, tar, roofing compound, or acid has been deposited in soil within a planting area.
2. Do not mix or place soils and soil amendments in frozen, wet, or muddy conditions.
3. Suspend soil spreading, grading, and tilling operations during periods of excessive soil moisture until the moisture content reaches acceptable levels to attain the required results.
4. Uniformly moisten excessively dry soil that is not workable and which is too dusty.

B. Proceed with installation only after unsatisfactory conditions have been corrected.

C. If contamination by foreign or deleterious material or liquid is present in soil within a planting area, remove the soil and contamination as directed by Architect and replace with new planting soil.

3.2 PREPARATION

A. Protect structures, utilities, sidewalks, pavements, and other facilities and turf areas and existing plants from damage caused by planting operations.

B. Install erosion-control measures to prevent erosion or displacement of soils and discharge of soil-bearing water runoff or airborne dust to adjacent properties and walkways.

C. Lay out individual tree and shrub locations and areas for multiple plantings. Stake locations, outline areas, adjust locations when requested, and obtain Architect's acceptance of layout before excavating or planting. Make minor adjustments as required.

D. Lay out plants at locations directed by Architect. Stake locations of individual trees and shrubs and outline areas for multiple plantings.

3.3 PLANTING AREA ESTABLISHMENT

A. Loosen subgrade of planting areas to a minimum depth of 6 inches . Remove stones larger than 2 inches in any dimension and sticks, roots, rubbish, and other extraneous matter and legally dispose of them off Owner's property.

B. Finish Grading: Grade planting areas to a smooth, uniform surface plane with loose, uniformly fine texture. Roll and rake, remove ridges, and fill depressions to meet finish grades.

C. Before planting, obtain Owner's acceptance of finish grading; restore planting areas if eroded or otherwise disturbed after finish grading.

## 3.4 EXCAVATION FOR TREES AND SHRUBS

A. Planting Pits and Trenches: Excavate circular planting pits with sides sloping inward at a 45-degree angle. Excavations with vertical sides are not acceptable. Trim perimeter of bottom leaving center area of bottom raised slightly to support root ball and assist in drainage away from center. Do not further disturb base. Ensure that root ball will sit on undisturbed base soil to prevent settling. Scarify sides of planting pit smeared or smoothed during excavation.

1. Excavate approximately three times as wide as ball diameter for balled and burlapped stock.
2. Excavate at least 12 inches wider than root spread and deep enough to accommodate vertical roots for bare-root stock.
3. Do not excavate deeper than depth of the root ball, measured from the root flare to the bottom of the root ball.
4. If area under the plant was initially dug too deep, add soil to raise it to the correct level and thoroughly tamp the added soil to prevent settling.
5. Maintain required angles of repose of adjacent materials as shown on the Drawings. Do not excavate subgrades of adjacent paving, structures, hardscapes, or other new or existing improvements.
6. Maintain supervision of excavations during working hours.

B. Fill excavations with water and allow to percolate away before positioning trees and shrubs.

## 3.5 TREE, SHRUB, AND VINE PLANTING

A. Before planting, verify that root flare is visible at top of root ball according to ANSI Z60.1. If root flare is not visible, remove soil in a level manner from the root ball to where the top-most root emerges from the trunk. After soil removal to expose the root flare, verify that root ball still meets size requirements.

B. Remove stem girdling roots and kinked roots. Remove injured roots by cutting cleanly; do not break.

C. Set balled and burlapped stock plumb and in center of planting pit or trench with root flare 2 inches above adjacent finish grades.

1. Use planting soil for backfill.
2. After placing some backfill around root ball to stabilize plant, carefully cut and remove burlap, rope, and wire baskets from tops of root balls and from sides, but do not remove from under root balls. Remove pallets, if any, before setting. Do not use planting stock if root ball is cracked or broken before or during planting operation.
3. Backfill around root ball in layers, tamping to settle soil and eliminate voids and air pockets. When planting pit is approximately one-half filled, water thoroughly before placing remainder of backfill. Repeat watering until no more water is absorbed.
4. Continue backfilling process. Water again after placing and tamping final layer of soil.

D. When planting on slopes, set the plant so the root flare on the uphill side is flush with the surrounding soil on the slope; the edge of the root ball on the downhill side will be above the surrounding soil. Apply enough soil to cover the downhill side of the root ball.

## 3.6 GROUND COVER AND PLANT PLANTING

A. Set out and space ground cover and plants other than trees, shrubs, and vines as indicated in even rows with triangular spacing.

B. Use planting soil for backfill.

C. Dig holes large enough to allow spreading of roots.

D. For rooted cutting plants supplied in flats, plant each in a manner that will minimally disturb the root system but to a depth not less than two nodes.

E. Work soil around roots to eliminate air pockets and leave a slight saucer indentation around plants to hold water.

F. Water thoroughly after planting, taking care not to cover plant crowns with wet soil.

G. Protect plants from hot sun and wind; remove protection if plants show evidence of recovery from transplanting shock.

## 3.7 PLANTING AREA MULCHING

A. Mulch backfilled surfaces of planting areas and other areas indicated.

1. Organic Mulch in Planting Areas: Apply 2-inch average thickness of organic mulch [extending 12 inches beyond edge of individual planting pit or trench and over whole surface of planting area, and finish level with adjacent finish grades. Do not place mulch within 3 inches of trunks or stems.

## 3.8 PLANT MAINTENANCE

A. Maintain plantings by pruning, cultivating, watering, weeding, fertilizing, mulching, restoring planting saucers, adjusting and repairing tree-stabilization devices, resetting to proper grades or vertical position, and performing other operations as required to establish healthy, viable plantings. Spray or treat as required to keep trees and shrubs free of insects and disease.

B. Fill in as necessary soil subsidence that may occur because of settling or other processes. Replace mulch materials damaged or lost in areas of subsidence.

C. Apply treatments as required to keep plant materials, planted areas, and soils free of pests and pathogens or disease. Use integrated past management practices whenever possible to minimize the use of pesticides and reduce hazards. Treatments include physical controls such as hosing off foliage, mechanical controls such as traps, and biological control agents.

## 3.9 CLEANUP AND PROTECTION

A. During planting, keep adjacent paving and construction clean and work area in an orderly condition.

B. Protect plants from damage due to landscape operations and operations of other contractors and trades. Maintain protection during installation and maintenance periods. Treat, repair, or replace damaged plantings.

C. After installation and before Final Completion, remove nursery tags, nursery stakes, tie tape, labels, wire, burlap, and other debris from plant material, planting areas, and Project site.

3.10 DISPOSAL

A. Remove surplus soil and waste material including excess subsoil, unsuitable soil, trash, and debris and legally dispose of them off Owner's property.

**END OF SECTION 329300**

**APPENDIX A – GEOTECHNICAL EXPLORATION REPORT**

PART 1 - GEOTECHICAL EXPLORATION REPORT

1.1 RELATED DOCUMENTS

A. Geotechinical Report prepared by Thiele Geotech Inc.

B. See report for details.

**END OF SECTION APPENDIX A**

**APPENDIX B – VAPOR BARRIER AND PASSIVE VENTILATION SYSTEM**

PART 1 - VAPOR BARRIER AND PASSIVE VENTILATION SYSTEM

1.1 RELATED DOCUMENTS

A. Vapor barrier and passive ventilation system recommendations prepared by Thiele Geotech Inc.

B. See Memo for details.

**END OF SECTION APPENDIX B**

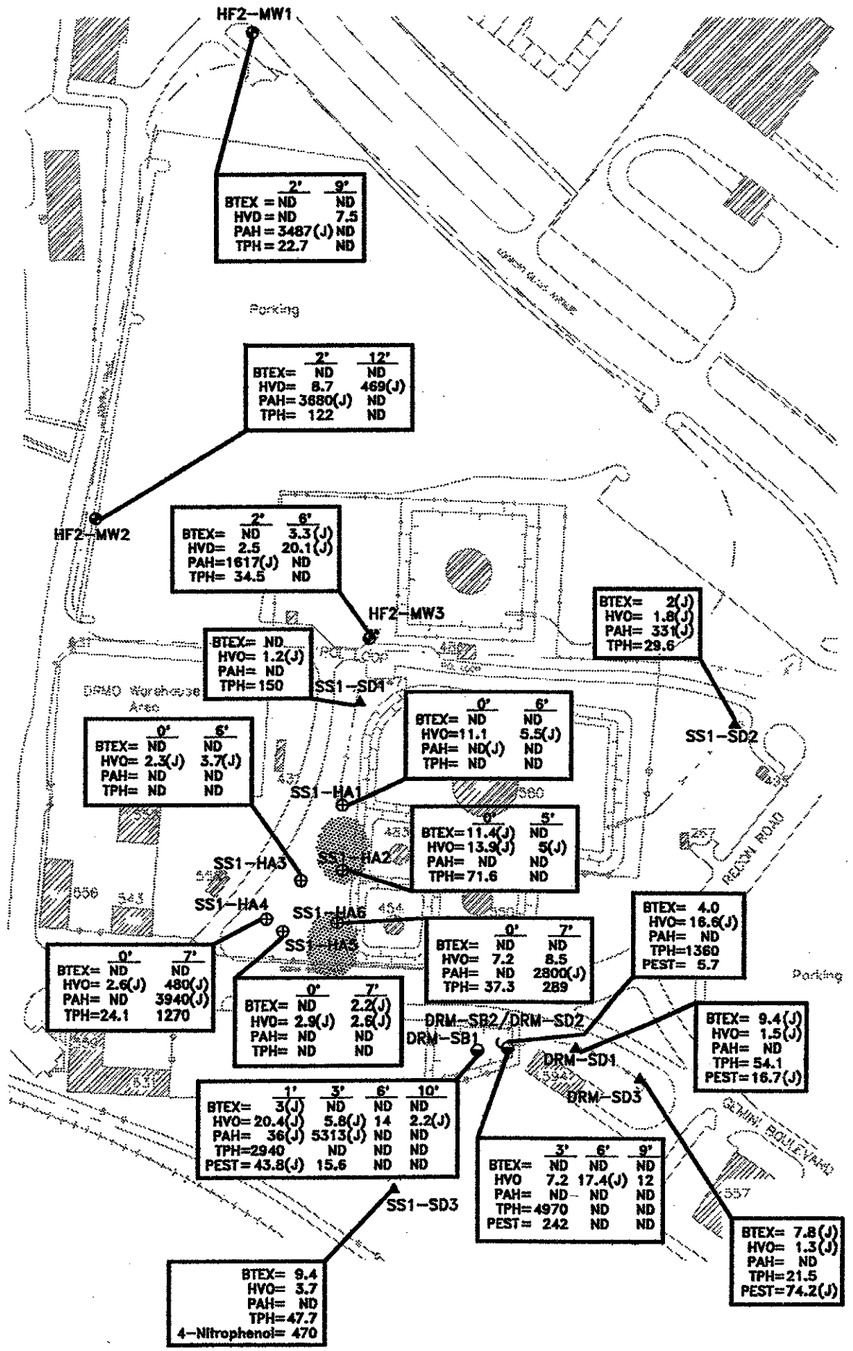


## LEGEND

- Fence
- Structure
- Property Line
- Railroad Line
- Drainage Ditch
- Temporary Well Location
- S,I,D Monitoring Well Location (Shallow, Intermediate or Deep)
- Sediment Sample Location
- Hand Auger Boring
- Estimated extent of floating JP-4

BTEX = Benzene, Toluene, Ethylbenze, Xylenes
HVO = Halogenated Volatile Organics
PAH = Poly Aromatic Hydrocarbons
TPH = Total Recoverable Petroleum Hydrocarbon
PEST = Pesticides
(J) = Estimated
ND = NOT DETECTED

Concentrations are in ug/kg (TPH in mg/kg)

NOTE: Distances between sampling locations are accurate per survey data. References between sampling locations and site features are approximate. Sample locations for DRMO have a (DRM) prefix. POL (SS1) and Hardfill 2 (HF2) prefixes are shown due to close proximity of the SWMUs.

SOURCE: Offutt AFB CAD generated site & aerial photos

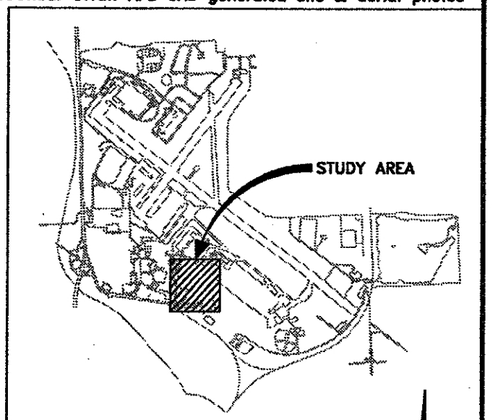


SITE LOCATION PLAN

**Woodward-Clyde Consultants**
ENGINEERING & SCIENCES APPLIED TO THE EARTH & ITS ENVIRONMENT

ORGANIC CHEMICALS DETECTED IN SOIL AT DRMO, HF2, & POL
RI VOLUME IV
OFFUTT AIR FORCE BASE NEBRASKA

| | | | |
|---|---|---|---|
| DRN BY PWB | DATE 06/04/92 | PROJECT NO. 89MC208D | FIG. NO. 5-1 |
| CHK'D BY DLJ | REVISION: 1 | | |

CAD FILE: PWB-6A-A.DWG (06-04-92)

**APPENDIX C – ORGANIC CHEMICAL DETECTION STUDY**

## PART 1 - ORGANIC CHEMICAL DETECTION STUDY

### 1.1 RELATED DOCUMENTS

A. Organic chemical detection study done by Woodward Clyde Consulting provided by Offutt Air Force Base.

B. See drawing for details in site area.

**END OF SECTION APPENDIX C**

**SCHEDULE OF DRAWINGS**

*The following drawings are an attachment to this Project Manual and form a part of the Contract Documents:*

**GENERAL**

| | | | |
|---|---|---|---|
| 1 | 32 | G1.0 | COVER SHEET |

**CIVIL**

| | | | |
|---|---|---|---|
| 2 | 32 | C1.0 | SITE SURVEY AND REMOVALS |
| 3 | 32 | C2.0 | SITE GRADING LAYOUT AND UTILITIES |
| 4 | 32 | C3.0 | CIVIL DETAILS |

**ARCHITECTURAL**

| | | | |
|---|---|---|---|
| 5 | 32 | A1.0 | GENERAL INFORMATION |
| 6 | 32 | A1.1 | EGRESS PLAN AND CODE SHEET |
| 7 | 32 | A1.2 | FLOOR PLAN, REFLECTED CEILING PLAN AND ENLARGED PLAN |
| 8 | 32 | A1.3 | EQUIPMENT, FURNITURE PLAN, ROOF PLAN, AND VAPOR VENT PLAN |
| 9 | 32 | A2.0 | BUILDING ELEVATION |
| 10 | 32 | A2.1 | BUILDING ELEVATION |
| 11 | 32 | A3.0 | BUILDING SECTIONS |
| 12 | 32 | A3.1 | WALL SECTIONS |
| 13 | 32 | A3.2 | DETAILS |
| 14 | 32 | A5.0 | INTERIOR ELEVATIONS |
| 15 | 32 | A5.1 | DETAILS |
| 16 | 32 | A6.0 | DOOR AND ROOM SCHEDULES, WINDOW, DOOR AND FRAME TYPES |

**STRUCTURAL**

| | | | |
|---|---|---|---|
| 17 | 32 | S1.1 | FOUNDATION PLAN |
| 18 | 32 | S2.1 | ROOF FRAMING PLAN |
| 19 | 32 | S3.0 | GENERAL STRUCTURAL NOTES |
| 20 | 32 | S3.1 | FOUNDATION DETAILS |
| 21 | 32 | S3.2 | FRAMING DETAILS |

**MECHANICAL**

| | | | |
|---|---|---|---|
| 22 | 32 | M1.1 | FLOOR PLAN HVAC |
| 23 | 32 | M2.1 | FLOOR PLAN PLUMBING |
| 24 | 32 | M3.1 | WAST AND VENT RISER |
| 25 | 32 | M4.1 | MECHANICAL SECTIONS AND DETAILS |
| 26 | 32 | M5.1 | MECHANICAL SCHEDULES |

**ELECTRICAL**

| | | | |
|---|---|---|---|
| 27 | 32 | E0.1 | SITE PLAN ELECTRICAL |
| 28 | 32 | E1.1 | FLOOR PLAN LIGHTING |
| 29 | 32 | E2.1 | FLOOR PLAN POWER |
| 30 | 32 | E3.1 | FLOOR PLAN SPECIAL SYSTEMS |
| 31 | 32 | E4.1 | ELECTRICAL DETAILS |
| 32 | 32 | E5.1 | ELECTRICAL SCHEDULES |

# SECTION 1A

# GENERAL CONDITIONS

INDEX

1. Principal Features
2. Scope
3. Occupancy
4. Temporary Services
5. Construction Trailer Use/Identification
6. Construction Sign
7. Grounds Maintenance / Snow Removal
8. Contractor Daily Logs
9. Utility Service Interruptions
10. Testing
11. Delivery & Storage of Material
12. Traffic Routing During Construction
13. Protection, Patching, and Repairing
14. Vegetation and Landscape
15. Fire Protection Construction Criteria
16. Time Extension for Unusually Severe Weather
17. Clean Up
18. Welding
19. Below Ground GPS Survey
20. Weather Tightness
21. Use of Utilities
22. Work Schedule
23. Security Requirements
24. Confined Space Entry
25. Airspace Coordination
26. Mobile Phone
27. Construction Permits
28. Existing Conditions
29. Temporary Toilets
30. Contractor Damages
31. Sensitive Information
32. Discrepancies
33. Sod Restorations
34. Final Acceptance Inspection
35. Removals
36. Government Access
37. Coordination
38. Occupational, Safety, Health Act
39. Contract Progress Schedule
40. Deficiency List
41. Termite Treatment Reporting
42. Flight-line Driving
43. Operations & Maintenance Manual
44. Warranty Book
45. Extra Stock

**1. PRINCIPAL FEATURES.** The work covered by these specifications and accompanying drawings consists of furnishing all plans, labor, materials, tools, and equipment necessary in performing all operations in connection with this contract.

**2. SCOPE.** In general, the principal features of the work are outlined but not limited to this paragraph. Unless otherwise indicated, it is not the intent of this listing to include technical data for materials or the installation of these materials.

**3. OCCUPANCY.** During construction, the Government may occupy the existing facilities. The contractor shall not restrict pedestrian or vehicular traffic to these facilities and shall coordinate construction with the Government Construction Representative to minimize conflicts. The contractor shall perform the work so as not to interfere with ongoing operations.

**4. TEMPORARY SERVICES**. The contractor shall provide and maintain any temporary services, including but not limited to water, power, lighting, access provisions, fire extinguishers, weather or security enclosures, and temporary dust partitions. Remove temporary services when the use of services is no longer needed.

**5. CONSTRUCTION TRAILER USE/IDENTIFICATION**. The location of any trailer/temporary building, etc. used during a contract period shall be approved by the Chief of Construction Management [(402) 294-5084] prior to installation or delivery to the base (allow 7-10 days for this approval to be processed). For security, safety, and/or emergency notification purposes, each trailer/building, etc. must be prominently marked, identifying the contractor and providing telephone number(s) for a point of contact during both duty and non-duty hours. Use either sign(s) or permanent markings, professional in appearance, as determined by the Government Construction Representative. Maintain and keep neat in appearance each trailer and its immediate area.

**6. CONSTRUCTION SIGN.** The contractor shall provide a project construction sign if directed by the Contracting Officer. The sign shall be constructed as follows (a larger drawing is available upon request):

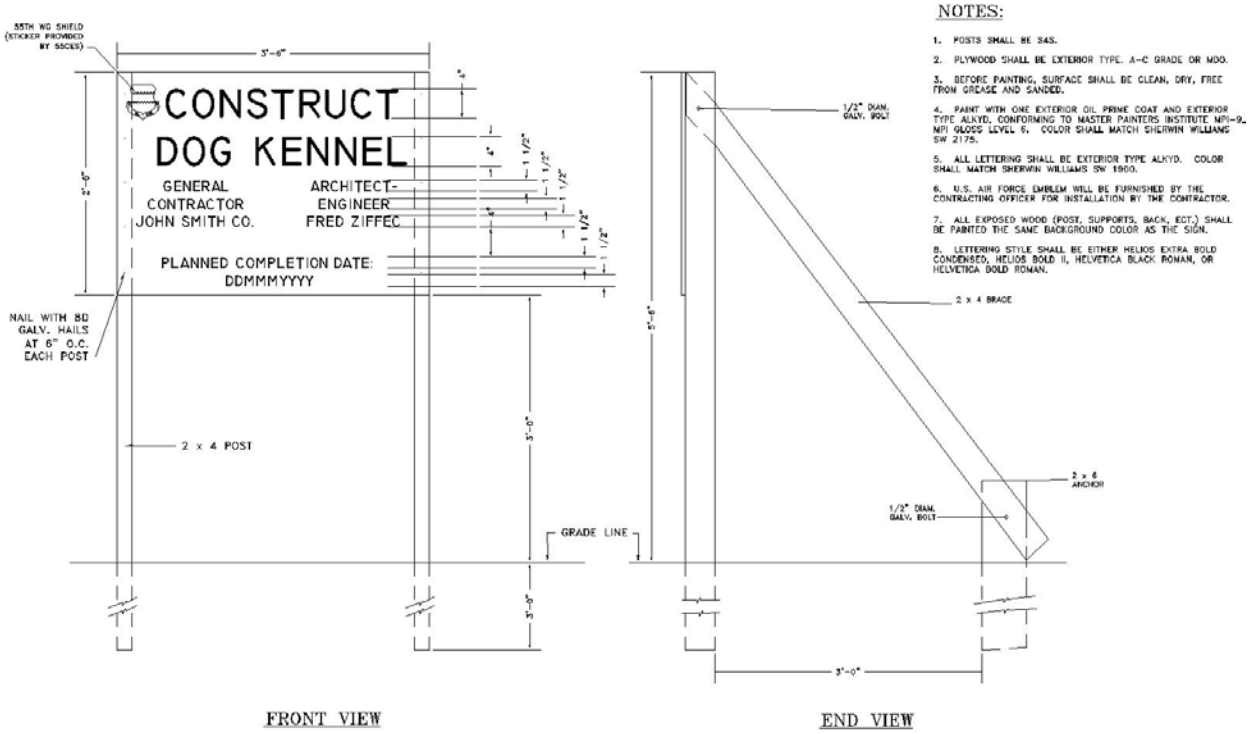


U.S. AIR FORCE PROJECT SIGN DETAIL
NOT TO SCALE

**7. GROUNDS MAINTENANCE / SNOW REMOVAL**. The contractor is responsible for maintaining the construction site in a manner that is safe and provides a clean and neat appearance. This includes keeping trash picked up, keeping vegetation shorter than 4" and keeping roadways and sidewalks free from snow and ice.

**8. CONTRACTOR DAILY LOGS**. The Contractor shall maintain current records providing factual evidence that required quality control activities and/or tests have been performed. These records shall include the work of subcontractors and suppliers and shall be on an acceptable form that includes, as a minimum, the following information:

a. Contractor/subcontractor and their area of responsibility.
b. Operating plant/equipment with hours worked, idle, or down for repair.

c. Work performed each day, giving location, description, and by whom. When Network Analysis (NAS) is used, identify each phase of work performed each day by NAS activity number.
d. Test and/or control activities performed with results and references to specifications/drawings requirements. The control phase shall be identified (Preparatory, Initial, Follow-up). List of deficiencies noted, along with corrective action.
e. Quantity of materials received at the site with statement as to acceptability, storage, and reference to specifications/drawings requirements.
f. Submittals and deliverables reviewed, with contract reference, by whom, and action taken.
g. Offsite surveillance activities, including actions taken.
h. Job safety evaluations stating what was checked, results, and instructions or corrective actions.
i. Instructions given/received and conflicts in plans and/or specifications.
j. Contractor's verification statement.

These records shall indicate a description of trades working on the project; the number of personnel working; weather conditions encountered; and any delays encountered. These records shall cover both conforming and deficient features and shall include a statement that equipment and materials incorporated in the work and workmanship comply with the contract. The original and one copy of these records in report form shall be furnished to the Contracting Officer's Representative on the first day of the week following the date(s) covered by the report, except that reports need not be submitted for days on which no work is performed. As a minimum, one report shall be prepared and submitted for every 7 days of no work and on the last day of a no work period. All calendar days shall be accounted for throughout the life of the contract. The first report following a day of no work shall be for that day only. Reports shall be signed and dated by the contractor's Superintendent. The report shall include copies of test reports and copies of reports prepared by all subordinate quality control personnel.

**9. UTILITY SERVICE INTERRUPTIONS**.

a. The contractor shall submit written notification not less than 14 calendar days (unless waived by the Government Construction Representative) in advance of each interruption of each utility and communication service to or within existing buildings and facilities being used by others and new facilities in use and possession prior to completion. No single outage will exceed 4 hours unless approved in writing. The contractor shall describe the work to be done, the desired time, date, and duration of the outage. No work shall be done until approval is received from the Government Construction Representative. All utility outages will be conducted during non-duty hours. The time and duration of all outages will be coordinated through the Government Construction Representative. All utility service interruptions shall be kept to a minimum. In order to minimize interruption durations, the contractor shall make every attempt to complete maximal preparation prior to each utility interruption.

b. All overhead utility pole removal, relocation, and/or bracing shall be accomplished by OPPD. The contractor shall coordinate any work within 5 feet of any utility pole with OPPD. The OPPD point of contact is Steve Sauer at 402-636-3553. Any required stand off charges for

bracing, pole relocates, or required overhead changes to ensure safety of property and personnel shall be at the contractor expense.

**10. TESTING**. All material sampling and testing as required in the specifications or as required by the Government Construction Representative and retest required due to failure of original test shall be performed by a laboratory or laboratories employed by the contractor at no additional cost to the Government.

**11. DELIVERY AND STORAGE OF MATERIAL**. The contractor shall use only established roadways, entrances, and exits as prescribed by the Government Construction Representative. Materials and equipment shall be stored only in designated areas, and shall be transported directly to and from the construction site under strict regulations as prescribed by the Government Construction Representative. Materials quantity receipt shall be given to the Government Construction Representative upon delivery of materials to job site. All items of stored materials, containers, vehicles and other equipment shall be removed from the base prior to final payment.

**12. TRAFFIC ROUTING DURING CONSTRUCTION**. In order to reduce confusion and provide the best possible flow of traffic during construction, the contractor shall closely coordinate his work schedule with the Government Construction Representative.

a. The contractor shall notify the Government Construction Representative at least fourteen (14) calendar days before closing any traffic lanes, blocking streets, or otherwise changing traffic routes.

b. The contractor shall be responsible for providing, placing, maintaining, relocating, and removing all traffic control devices required for construction. All traffic control shall comply with the requirements of the Manual on Uniform Traffic Control Devices (latest edition).

c. Traffic control plans shall be submitted prior to the start of any project work and shall allow a minimum of two weeks for approval prior to the intended date of implementation. All changes to the plan must be updated and submitted to the Government a minimum of two weeks before implementation.

d. Traffic control shall be considered a cost incidental to the project.

**13. PROTECTION, PATCHING AND REPAIRING**. All holes, damaged finishes, exposed unfinished surfaces or any damage caused by work under this contract shall be repaired at no additional cost to the Government. Restore exposed finishes of patched areas where directed by the Government Construction Representative. Extend finish restoration into adjoining areas in a manner that will eliminate evidence of patching and refinishing.

**14. VEGETATION AND LANDSCAPING**. Contractor shall remove any existing building perimeter vegetation and landscaping including mulches and gravel to permit completion of the

work. Contractor shall restore all vegetation and landscaping to original condition before completing work as approved by the Government Construction Representative. Replace any existing vegetation or landscaping damaged by work under this contract. When seeding a disturbed area, only S-31 single or S-32 double straw matting, or approved equal should be used.

**15. FIRE PROTECTION CONSTRUCTION CRITERIA**. The contractor will be required to comply with the provisions of National Fire Protection Act 241 entitled "Building Construction and Demolition Operations," including Appendix A. The contractor shall make themselves knowledgeable and comply with the fire protection requirements of Offutt AFB Supplement 1 to Air Force Instruction 32-2001, “Fire Prevention and Fire Protection,” to apply during the construction period. The contractor shall furnish and maintain required fire extinguisher(s) during the construction period and shall remove the extinguisher(s) upon project completion.

**16. TIME EXTENSIONS FOR UNUSUALLY SEVERE WEATHER** This clause specifies the procedure for the determination of time extensions for unusually severe weather. In order for the Contracting Officer to award a time extension under this clause, the following conditions must be satisfied:

(1) The weather experienced at the project site during the contract period must be found to be unusually severe, that is, more severe than the adverse weather anticipated for the project location during any given month.

(2) The unusually severe weather must actually cause a delay to the completion of the project. The delay must be beyond the control and without the fault or negligence of the contractor.

(3) The following schedule of monthly anticipated adverse weather delays is based on National Oceanic and Atmospheric Administration (NOAA) or similar data for the project location and will constitute the base line for monthly weather time evaluations. The contractor's progress schedule must reflect these anticipated adverse weather delays in all weather dependent activities.

MONTHLY ANTICIPATED ADVERSE WEATHER DELAY
WORK DAYS BASED ON (5) DAY WORK WEEK

| | | | | | |
|---|---|---|---|---|---|
| JAN | 12 | MAY | 9 | SEP | 7 |
| FEB | 10 | JUN | 8 | OCT | 5 |
| MAR | 7 | JUL | 8 | NOV | 7 |
| APR | 7 | AUG | 6 | DEC | 11 |

(4) Upon acknowledgment of the Notice to Proceed (NTP) and continuing throughout the contract, the contractor will discuss the occurrence of adverse weather and resultant impact to normally scheduled work with the 55 CES Construction Inspector on the day they believe to be an adverse weather day. If the Construction Inspector concurs that it is an adverse weather day, he will log that on the AF 1477. The contractor must contact the Construction Inspector on the adverse weather day or it will be assumed they completed their scheduled work and an adverse weather day will not be counted. Actual adverse weather delay days must prevent work on critical activities for 50 percent or more of the contractor's scheduled work day. The number of

actual adverse weather delay days shall include days impacted by actual adverse weather (even if adverse weather occurred in previous month), be calculated chronologically from the first to the last day of each month, and be recorded as full days. If the number of actual adverse weather delay days exceeds the number of days anticipated in paragraph (3) above, the contracting officer will convert any qualifying delays to calendar days, giving full consideration for equivalent fair weather work days, and issue a modification.

**17. CLEAN UP**. Clean up of all items shall be accomplished by the end of each day. Debris, trash, and items removed and to be disposed of shall be removed from the work site and storage areas at the end of each day's work and disposed of outside the confines of the construction areas,
in a contractor provided area. The contractor will also be responsible for cleaning mud, rock, and
debris deposited by the contractor's, sub-contractor's, or supplier's vehicles from all roads in the construction areas used by these vehicles.

**18. WELDING**. Welding within the building will be permitted. The contractor shall obtain the proper welding permit and coordinate welding regulations with the Base Fire Department.

**19. BELOW GROUND GPS SURVEY**. The Offutt Drafting / Survey Office is responsible for conducting a GPS survey of all below ground features including, but not necessarily limited to the following: Structural corners, Electrical Utilities, Water Utilities, Wastewater Utilities, Storm Sewer Utilities, Natural Gas Utilities, POL/Fuel Utilities, and Communication Utilities. During construction, the Drafting / Surveying Office will conduct GPS surveys to record locations for all structures and existing utilities lines to be abandoned in place and to record all locations of all existing lines exposed during construction and all new building foundations, utility tap points, elbows, joints, tees, valves, etc. The Contractor is required to give verbal notice to a the Construction Inspector and speak to a Drafting / Surveying Office staff member a minimum of 1 day in advance of burying any below grade features. If the contractor buries below grade structures that need to be surveyed without the 1 day notice, they will be responsible for exposing the structure so the survey can be conducted. The Drafting / Survey Office phone number is 402.294.3296, The Drafting / surveying office mailing address is 106 Peacekeeper Drive Suite 2n3 (upper floor Martin Bomber Building in CE Drafting). The Base collecting this info does not exempt the contractor from having to provide complete and accurate information on their as-constructed drawings.

**20. WEATHER TIGHTNESS**. Contractor shall provide for each building unit to be fully weather tight at the end of each working day.

**21. USE OF UTILITIES**. All reasonable quantities of utilities will be made available to the contractor without charge if available. Any temporary connections or lines that may be required will be installed, maintained, and removed by the contractor at his own expense and in a manner satisfactory to the Government Construction Representative. Outside power connections to the exterior utility system shall be accomplished by the local utility and all fees shall be included in the contractor bid. Removal of such connections or lines will be accomplished before final

acceptance of the construction. If utilities are not available the contractor is responsible for providing any temporary utilities required (generator, fuel tanks, water tanks, etc.) as part of the base bid and at no additional cost to the government.

**22. WORK SCHEDULE**. Working hours for the contractor will normally be between the hours of 7:30 a.m. and 5:00 p.m., excluding Saturdays, Sundays, and Federal holidays. If the contractor wishes to work during periods other than above, additional Government inspection forces may be required. The contractor must request permission from the Contracting Officer to work during periods other than above sufficiently in advance to allow assignment of additional inspection forces when the Government Construction Representative determines that the additional inspection force is reasonably available. If such force is reasonably available, the Contracting Officer may authorize the contractor to perform work during periods other than normal duty hours/days.

**23. SECURITY REQUIREMENTS**. The contractor will be working in a secure area and will abide by all applicable rules and regulations. The contractor will coordinate with the appropriate government representative for government escorts to be present while working on the job site.

a. Listing of Employees. The contractor shall maintain a current listing of employees. The list shall include the employee's name, driver's license number and AF 75 number. The list shall be provided to the Contracting Officer and Construction Inspector. The list shall be updated within a week when an employee's status or information changes.

b. Security Training**.** The contractor shall ensure all employees receive initial and recurring security education training from the sponsoring agencies security manager if required. Training must be conducted IAW DOD 5200.1-R, Information Security Program Regulation, and AFI 31-401, "Information Security Program Management". Contractor personnel who work in Air Force controlled/restricted areas must be trained IAW AFI 31- 101, The Air Force Installation Security Program.

c. Pass And Identification and Base Entry. An Air Force Form 75 (AF 75), Visitors Pass is required for all employees and vehicles. The AF 75 will be issued IAW OAFBI 31-101, section 8.5.11. The contractor shall ensure the pass and identification items required for contract performance are obtained and renewed (as required) for employees and non-government owned vehicles. Contractors shall access the base using the contractor gate (south entrance) and are subject to vehicle search. Contractors will be responsible for escorting all material trucks required for the project from the contractor gate to the job site and back off base. Escort privileges must be included in the AF 75 request for an individual to be an escort.

d. Retrieving Identification Media. The contractor shall retrieve all government identification media, including vehicle passes from employees who depart for any reason before the contract expires; e.g. terminated for cause, retirement, etc. The contractor must turn in badges for all employees under the contract for final payment to be made.

e. For Official Use Only (FOUO). The contractor shall comply with DoD 5400.7-R,

Chapter 4, DoD Freedom of Information Act (FOIA) Program, requirements. This regulation sets policy and procedures for the disclosure of records to the public and for marking, handling, transmitting, and safeguarding FOUO material.

f. Reporting Requirements. Contractor personnel shall report to an appropriate authority any information or circumstances of which they are aware may pose a threat to the security of DOD personnel, contractor personnel, resources, and classified or unclassified defense information. Contractor employees shall be briefed by their immediate supervisor upon initial on-base assignment.

g. Physical Security. The contractor shall be responsible for safeguarding all government property and controlled forms provided for contractor use. At the end of each work period, all government facilities, equipment, and materials shall be secured.

h. Controlled/Restricted Areas. The contractor shall implement local base procedures for entry to Air Force controlled/restricted areas where contractor personnel will work. An AF Form 2586, Unescorted Entry Authorization Certificate, must be completed and signed by the sponsoring agencies Security Manager before a Restricted Area Badge (RAB) will be issued. Not all workers will require a RAB, only supervisors and/or shift foremen will require restricted access and will have escort authority for other employees. Contractor employees must have submitted a National Agency Check (NAC) and have a favorable local files review before receiving a Restricted Area Badge. Access shall be granted IAW AFI 31-501, Personnel Security Program Management.

i. Key Control. (The contractor shall establish and implement methods of making sure all keys issued to the contractor by the Government are not lost or misplaced and are not used by unauthorized persons. The contractor shall not duplicate any keys issued by the government.

1) The contractor shall immediately report to the Quality Assurance Evaluator (QAE) or Program Manager any occurrences of lost or duplicated keys.

2) In the event keys, other than master keys, are lost or duplicated, the contractor may be required, upon written direction of the contracting officer, to re-key or replace the affected lock or locks without cost to the government. The government may, however, at its option, replace the affected lock or locks or perform re-keying and deduct the cost of such from the monthly payment due the contractor. In the event a master key is lost or duplicated, all locks and keys for that system shall be replaced by the government and the total cost deducted from the monthly payment due the contractor.

3) The contractor shall prohibit the use of keys, issued by the government, by any persons other than the contractor's employees and the opening of locked areas by contractor employees to permit entrance of persons other than contractor employees engaged in performance of contract work requirements in those areas.

j. Explosives or Fire Arms: The contractor shall NOT use or possess explosives or fire

arms.

k. Routes**:** The contractor shall use only established roadways, entrances, and exits as prescribed by the Government Construction Representative.

l. Locations: The contractor's employees shall be restricted to areas within the contract scope plus direct routes to and from the site from off base.

m. Seat Belts: The use of seat belts by all vehicle and equipment occupants is required at all times while in vehicles and movable equipment.

n. Parking: The Contractor's employees shall park only in areas designated by the Chief of Construction Management for this purpose.

o. Vehicle Emblems: The contractor's commercial vehicles shall display emblems indicating the company name.

**24. CONFINED SPACE ENTRY**. The Contractor shall comply with 29 CFR 1910.146 for permit required Confined Space Entry requirements. Details and information pertaining to confined space entry are contained within the OSHA Standard.

Confined space entry shall include an entrance into a space that is large enough and so configured that an employee can bodily enter and perform assigned work, has limited or restricted means for entry or exit (e.g., tanks, vessels, silos, storage bins, hoppers, vaults, boilers, and pits are spaces that may have limited means of entry/exit) and is not meant for continuous human occupancy.

a. The contractor is required to ensure that a contractor generated confined space entry permit has been generated and is available on site for the duration of each permit required confined space entry. A permit is required to enter a confined space that has one or more of the following conditions:

(1) Contains or has a potential to contain a hazardous atmosphere.

(2) Contains a material that has the potential for engulfing an entrant.

(3) Has an internal configuration such that an entrant could be trapped or asphyxiated by inwardly conferring walls or by a floor that slopes downward and tapers to a smaller cross section.

(4) Contains any other recognized serious safety or health hazard.

b. All confined spaces shall be considered permit required spaces until pre-entry procedures demonstrate otherwise. Testing and classification of confined spaces will be done by a qualified person employed by the contractor who is trained in the operation of direct reading oxygen, flammability, and toxicity monitoring equipment prior to each confined space entry. Initial testing of confined spaces shall be performed by drop test or insertion of sample probes and

hoses into the space.

c. Each Contractor who is retained to perform permit space entry operations is allowed entry only through compliance with a permit space program meeting the requirements of 29 CFR 1910.146.

(1) The Base Civil Engineer will appraise the contractor of the elements, including hazards identified and what experience with the space that make the space in question a permit space.

(2) The Base Civil Engineer will appraise the contractor of any precautions or procedures that have been implemented for the protection of employees in or near the permit spaces where the contractor personnel will be working.

(3) Coordinate entry operations with Base Civil Engineer personnel when government and Contractor personnel will be working in or near permit spaces.

(4) Inform the Government of the permit space program that the Contractor will follow and of any hazards confronted or created in permit spaces whether through a briefing or during the entry operation.

(5) At the conclusion of entry operations, the contractor will notify the Base Civil Engineer regarding any hazards confronted or created in permit spaces during entry operations.

**(6) Copies of contractor generated Permit Required Confined Space Entry Permits will be provided to 55th Wing Safety and the appropriate squadron with responsibility for the space for the purposes of confined space history.** The permits will remain on file for a minimum of one calendar year from the date of entry.

d. The contractor is responsible to ensure their personnel are fully trained and certified to perform confined space duties. The Air Force is not responsible to train contractor employees on confined space entry program or procedures, conduct atmospheric or soils testing.

e. Coordinate entry operations and procedures with the Base Civil Engineering and agree upon the permit space entry system to be used when both organizational and contractor personnel will be working in a permit required confined space.

e. Review emergency rescue responsibilities to determine whether the contractor supplies rescue or if the installation fire department is expected to supply a rescue function. Ensure the fire chief coordinates on the contract and either approves or disapproves the use of a rescue team if supplied by the installation fire department.

**25. AIRSPACE COORDINATION.**

a. The contractor is responsible for completion and submittal of FAA Form 7460 to the Federal Aviation Administration for construction activities which may affect the airspace for Offutt Air Force Base. Obstacle survey accuracy code information shall also be provided. The contractor shall furnish a copy of both the submitted and approved Form 7460 to the Contracting Officer's Representative. Coordination with the FAA shall be at no additional cost to the Government. The contractor's project schedule shall allow time for this coordination during the contract's performance period. Contractor should expect 30-45 days after submittal to the FAA for the FAA approval to be completed. This time is included in the performance period and no additional time will be granted for approvals taking less than 45 days.

b. An Airfield Construction Waiver is required prior to any construction within the airfield fence. Coordinate with the contracting officer to facilitate completion and submission of the waiver by government personnel within 5 days of the Notice to Proceed. This may be a long lead item and the contractor shall schedule accordingly.

**26. MOBILE PHONE.** The contractor's site representative (superintendent or foreman), throughout the execution of the project, shall be accessible via a mobile phone. The number to the phone shall be local and provided to the Contracting Officer prior to the start of work. The contractor is informed that mobile phone usage without a hands-free device while driving on base is prohibited. Personnel violating this regulation may be cited.

**27. CONSTRUCTION PERMITS.**

a. Digging Permits: The contractor will be responsible for coordinating a government supplied, Base Civil Engineer Work Clearance Request (AF Form 103) prior to performing digging of any type. The contractor shall process the digging permit by coordinating with and obtaining signatures from responsible representatives of the organizations listed on the AF Form 103 prior to obtaining final approval from the Air Force Base Civil Engineer or his approved representative. The area requested for clearance for each individual permit shall be limited to a maximum of two (2) weeks production for an individual permit. The contractor will be given assistance, by the government, in the execution of the initial Work Clearance Request. Thereafter, government assistance will be limited to an as-needed basis in the event of unusual circumstances. It will be the contractor's responsibility to coordinate the completion of the necessary AF Form 103 and arrange to have existing utilities located as indicated on the completed form, prior to the beginning of digging operations in the individual areas. This coordination is anticipated to take approximately three (3) working days to complete per request, and may require coordination with as many as twenty (20) individuals located on or near the base. A blank copy of the AF Form 103 can be obtained from the construction inspector. Any unusual delay in obtaining approval from any particular organization will be reported immediately to the Contracting Officer Representative for assistance. The contractor must comply with the four contractor responsibilities on the back of the AF Form 103, including maintaining a copy of the AF Form 103 on the job site while working.

b. Utility Staking Requirements: The contractor shall layout and mark his intended area(s) of excavation before calling for field coordination by utility personnel. This shall be done a minimum of five working days in advance of when digging is expected to begin. Once all responsible utility representatives have field located crossover and/or interference points between the new utility route and existing utilities, and signed off on the digging permit to

signify completion of the field coordination of the digging permit, then digging in the area represented by the digging permit may begin. Any utility service markers or markings established by the utility representatives must be maintained by the contractor through the completion of the digging operations.

c. Digging Operations: Digging near established interference or crossover points shall be done by hand, five (5) feet either side of the point along the intended route, in order to prevent disturbing the existing utility. If the existing utility is uncovered in the new excavation, it shall be protected from damage and movement while in the open excavation and during backfill. The contractor shall be responsible for the repairs and associated costs for repairs of any utility damaged by construction, whose location was made known to the contractor.

d. National Pollutant Discharge Elimination System (NPDES) Permits for Construction Activities. See Section 1C.

e. NPDES Permit for Dewatering Operations: See Section 1C.

**28. EXISTING CONDITIONS.** The plans represent the best available information at the time they were prepared. While every effort has been made to correctly show all major existing items which will affect the work, it is recommended that prospective bidders examine the site prior to submitting a bid. The Contractor shall verify all measurements at the site and shall be responsible for dimensions and proper installation of all materials. No additional payment will be made for extra work required by obstacles which were in place and clearly visible at the time of bidding.

**29. TEMPORARY TOILETS.** The Contractor shall provide and maintain sanitary temporary toilets for all work accomplished in and adjacent to project. These toilets shall be located as directed by the Contracting Officer. The temporary toilets shall be portable, enclosed and weatherproofed and kept in a sanitary condition at all times.

**30. CONTRACTOR DAMAGES.** Areas not identified to be removed/worked under this contract that are disturbed or damaged during construction shall be removed and replaced at no additional cost to the Government.

**31. SENSITIVE INFORMATION.** The contractor, his employees, subcontractor personnel, and supplier personnel shall treat all information about the project specifically and about the surrounding military facilities in general as sensitive and proprietary and with confidentiality. The contractor, his employees, subcontractor personnel, and supplier personnel shall share project and base information with others only on a need to know basis and only in support of the project. The contractor, his employees, subcontractor personnel, and supplier personnel shall discard printed information generated incidental to the project only after shredding.

**32. DISCREPANCY.** In case of discrepancies within the contract documents in regards to work requirements, the greater quality and quantity indicated shall control in resolving discrepancies.

**33. SOD RESTORATIONS.** Except where seeding is indicated elsewhere in the construction documents, the contractor shall sod all areas which he disturbs incidental to construction. He shall maintain the new sod for a minimum of three weeks after setting. Maintenance shall include providing at least one inch of water twice per week. Any new sod that is not vigorously growing after the maintenance period shall be removed and replaced by the contractor with new at no additional cost to the government. Each time sod is removed, the maintenance requirement shall restart at no additional cost to the government.

**34. FINAL ACCEPTANCE INSPECTION.** Upon completion of all of the work, the contractor shall coordinate in writing with the Contracting Officer's Representative for a final acceptance inspection. Prior to scheduling the Final Acceptance Inspection, the contractor shall write a Punch list that shows all work the contractor believes must still be performed, including any remaining items from the deficiency list. The Punch list shall also contain the contractor's expected date of completion for each item and a column for actual completion date. The contractor shall add any items found to be deficient during the Final Acceptance Inspection and forward the Final Punch List to all attendees of the Final Inspection. The contractor shall provide a copy of the punch list and a list of all AF 75s issued for this contract as attachments when requesting the Final Acceptance Inspection.

**35. REMOVALS.** The Government shall have the right of first refusal in regards to all items indicated for removal. The government may chose to retain ownership on an exception basis of any removal item up until the time at which the contractor disturbs the item. Generally, however, the government will surrender ownership of all removal items. Removal items shall become the property of the contractor and removed from Offutt AFB by him on a daily basis.

**36. GOVERNMENT ACCESS.** Government officials will have access to all parts of the project at all times for inspection purposes.

**37. COORDINATION.**

a. WEEKLY MEETINGS. The contractor shall hold weekly coordination meetings. He shall prepare an agenda for each meeting. The agenda shall include but not be limited to the contractor's description of the previous week's accomplishments, the coming week's anticipated construction challenges and a schedule updated weekly that projects major construction operations through time to the end of construction. He shall begin the meeting at the same place on the project site each week. He shall hold the meeting at the same time each week such as at 9:00 a.m. on Tuesdays. He shall coordinate the time and location during the preconstruction meeting with the Contracts Officer Representative such as to maximize convenience for the government representatives who may need to attend. These will include the Contracting Officer's Representative and the Civil Engineering Project Manager and Construction Inspector.

b. OTHER PROJECTS: The contractor shall be fully responsible for coordinating his operations with those of any other construction, renovation, repair, or maintenance projects in

the vicinity. Coordination shall include but not be limited to vehicle access, movement of equipment, security, installation and removal of utilities, storage and parking.

c. SINGLE POINT OF CONTACT. The contractor shall designate one primary and one alternate employee who will be on the site at all times while work is in progress to serve as the government's single point of contact for matters of daily concern. The single point of contact shall serve as the contractor's safety officer, environmental compliance officer and EEO officer and shall generally exercise authority over all of the contractor's employees and subcontractors. The contractor shall route all submittals through the single point of contact. An appointment letter for these individual's shall be submitted within 10 days of the Notice to Proceed and be updated prior to any personnel changes.

d. OFFUTT AIR SHOW. The contractor shall not be allowed to work during the annual Offutt Air Show. This is generally a three day weekend (Fri-Sat-Sun) event normally held once per year in the month of August. It is heavily advertised to the public each year beginning in June.

e. NOTIFICATION OF DELAYS. The Contractor shall provide prior notification to the Contracting Officer's Representative in writing, when he plans to stop work for a period of more than four days. The prior notification shall indicate proposed dates of the stoppage.

f. COORDINATION OF GOVERNMENT FURNISHED ITEMS. The contractor is responsible for providing a schedule and coordinating requirements for all items identified as Government Furnished Contractor Installed (GFCI) and Government Furnished Government Installed (GFGI) on the contract drawings. This includes coordinating the location and placement of blocking for the attachment of these items, power and communications jack locations, etc.

**38. OCCUPATIONAL, SAFETY AND HEALTH ACT.** Contractors shall comply with OSHA 1926, Construction Standards and the portions of OSHA 1910 Standards that are applicable to construction. The U.S. Army Corps of Engineers Manual EM 385-1-1, shall be used in the absence of guidance in OSHA standards.

**39. CONTRACT PROGRESS SCHEDULE.**

a. AF Form 3064. An AF Form 3064 is required for a contractor to get paid for work. The AF Form 3064 must be submitted and approved prior to the start of any work on the project. The AF Form 3064 cannot be approved without the approved submission of the Contract Progress Schedule, below. When writing the AF Form 3064 two items must be included / scheduled at the conclusion of the contract. These items are:

1. Project Close-out – 5%
   a. Payment for this line requires the receipt and approval of all non-approved or non-furnished submittals that are owed to the government including as-constructed drawings.
2. AF Form 75 Turn-in – 3%

a. All base passes must be accounted for. 100% accountability is required for payment of this line.

b. Contract Progress Schedule. The contract progress schedule must be an MS Project compatible Gant chart outlining all major aspects of the project and the timeline. Hardcopy submissions are usually acceptable for approval and at the weekly coordination meetings but the MS project file must be provided upon request of the Government. The initial Contract Progress Schedule must be approved prior to the start of any work on the project.

**40. DEFICIENCY LIST.** The contractor shall maintain an up to date list of all construction deficiencies found. This list shall include all deficiencies found including items identified by contractor personnel or the Government. The list shall include the date the deficiency was identified and after the work is complete, the date corrected. The item can be removed from the list once the 55 CES Construction Inspector has verified that the deficiency has been corrected. This list shall be provided for discussion during the weekly coordination meeting.

**41. TERMITE TREATMENT REPORTING.** If termite treatment is required, the contractor must submit a DD Form 1532-1 to the Government Construction Inspector by the first day of the month following any month a termite treatment, or other pest control chemical, is applied. The form must be completely filled out including the type of chemical and quantity applied.

**42. AIRFIELD DRIVING.** Any person operating a motor vehicle inside the airfield fence on Offutt AFB must have in their possession a current AF IMT 483 Certificate of Competency for airfield driving. Training to obtain the Certificate of Competency is approximately 3 hours per individual and will be conducted by the CE airfield driving program manager. Only individuals with the Certificate of Competency are authorized to have the code to access the flight-line. Giving the gate codes to unauthorized individuals or not following procedures outlined in the training, such as FOD checks when entering the flight-line, will result in immediate revocation of the individual's Certificate of Competency. Any possible project delays or costs associated with an individual's revocation of the Certificate of Competency are the contractor's responsibility and shall be at no additional cost to the Government. The project performance period will not be extended due to loss of airfield access for failure to follow established procedures and guidance.

**43. OPERATIONS AND MAINTENANCE MANUAL.** Where required by various technical sections and the AF66, operations and maintenance instructions and/or manuals with parts lists included shall be provided by the Contractor and shall be assembled in three-ring binders with index and tabbed section divider indicating the contents by equipment or system name. A cover shall be provided with the title "Operations and Maintenance Manual" along with the building number, project number and project title at a minimum.

**44. WARRANTY BOOK.** The Contractor shall provide a three-ring or bound book containing a listing of all equipment items which are specified to be guaranteed along with the warranty papers for each piece of equipment. The book shall be indexed alphabetically by equipment type. For each guaranteed item, the name, address, and telephone number shall be shown on the

list for the subcontractor who installed the equipment, equipment supplier or distributor and equipment manufacturer. Completion date of the guarantee period shall correspond to the applicable specification requirements for each guaranteed item. The names of service representatives that will make warranty calls along with the day, night, weekend and holiday contacts for response to a call within the time period specified shall also be identified. A cover shall be provided with the title "Warranty Book" along with the building number, project number and project title at a minimum. Inside the cover shall be the prime contractor's contact information and a table of contents listing all warranted systems in the book.

**45. EXTRA STOCK.** The contractor shall deliver to the Government, before final payment, extra stock of the following items (see individual Specification Sections for items and quantities which are affected):

Type of Material Section #####

- - END OF SECTION - -

# SECTION 1B

## GENERAL CONDITIONS - SHOP DRAWINGS/SUBMITTALS

INDEX

1. Shop Drawings
2. Deviations
3. Submittals
4. As-Constructed Drawings
5. Record Shop Drawings/Guarantees
6. Transfer and Acceptance of Military Real Property DD Form 1354
7. Contractor Provided Specifications
8. Contractor-Provided Documents for LBP and Asbestos

**1. SHOP DRAWINGS:** In accordance with the CONTRACT PROVISIONS, and within 30 days after Notice to Proceed, the Contractor shall submit to the Contracting Officer for approval, in the quantities indicated on AF Form 66 Schedule of Material of Submittals, complete shop drawings of materials and equipment to be incorporated in the work. Shop drawings shall include catalog number, cuts, diagrams, drawings and such other descriptive data as may be required by the Contracting Officer. Shop drawings on component items forming a system, or that are interrelated, shall be submitted at one time as a single submittal in order to demonstrate the items have been properly coordinated and will function properly as a system. A notation shall be made on each shop drawing submitted as to the item's specific use, either by the particular type number reference on the drawings; or in the specifications: by a reference to the applicable paragraph of the specifications, or by a description of its specific location.

**2. DEVIATIONS:** Shop drawings shall represent the equipment and material requirements as specified herein and on the drawings. Where shop drawings deviate from the specifications or drawings, the Contractor shall inform the Contracting Officer in writing and clearly indicate the deviations and the reasons therefore. Such deviations shall be evaluated and, if accepted, will be processed as a modification to the contract. The contract specifications and drawings shall govern over shop drawings, even though approved by the Government, where the Contractor has not identified a deviation to the Contracting Officer. In such cases, the Contractor will be required to comply with the contract specifications and drawings at no additional cost to the Government.

**3. SUBMITTALS:** Shop drawings, samples, letters, certificates, etc., shall be submitted for, but not limited to the items listed in each section of the specifications. Submittals in addition to those listed, may be required by the Contracting Officer. The AF form 66 summarizes contained within the construction documents summarizes the required project submittal items, but may not be complete.

**4. AS-CONSTRUCTED DRAWINGS**: The contractor shall maintain, and have on site for review at all times, a separate set of full-scale Contract Drawings marked-up to fully indicate as-constructed conditions along with a complete set of project specifications with all amendments posted. All variations from the Contract Drawings, for whatever reason, including those resulting from the use of optional materials, shall be indicated. These variations shall be shown in the same general detail utilized in the initial Contract Drawings. After the Building Occupancy inspection is conducted the contractor will have 90 days to edit the AutoCAD drawings provided by the Government to accurately reflect the as-constructed conditions. These drawings must be printed on 4 mil (0.004") thick drafting film (also known as mylar), with a single- or double-matte finish and be plotted on an electrostatic or laser plotter which meets the standards of the Library of Congress for archival stability. The revised as-constructed drawings, in AutoCAD format, must also be submitted on CD. Government personnel shall review the as-constructed drawings to determine whether they are correct and complete. If not, they shall be returned to the contractor for additional updating until they are satisfactory to the government. Final payment shall not be made prior to satisfactory completion.

**5. RECORD SHOP DRAWINGS/GUARANTEES**: Record shop drawings submitted upon completion of the work under this contract shall be suitably bound and labeled with project name and number. Include therein a list of all equipment items specified to be guaranteed or which have separate manufacturer's guarantees accompanied by a copy of each specific guarantee and the name, address and telephone number for the manufacturer, supplier/distributor and installer.

**6. TRANSFER AND ACCEPTANCE OF MILITARY REAL PROPERTY DD FORM 1354:** The contractor shall accurately complete and provide a DD Form1354 current edition for the project. A draft copy shall be submitted for review 30 days prior to project completion. After review, a copy will be returned to the contractor to incorporate any comments and to produce the Interim 1354. The Interim 1354 must be complete to schedule the final inspection and the Government shall receive a copy at the conclusion of the final inspection. The contractor has 30 days after the final inspection to complete the final 1354 and submit it to the government. He shall do this both electronically and in hard copy. The DD Form 1354 is a form to document quantities and transfer military real property from contractor control to the government control. The 55CES/CEC Project Manager can provide a sample of a previously completed form upon request.

**7. CONTRACTOR PROVIDED SPECIFICATIONS:** In the event that there is a disagreement regarding referenced specifications (such as by ASTM, AWWA, AASHTO, NSF, ANSI, UBC, etc.) it shall be the responsibility of the contractor to purchase and submit copies of the specifications over which there is disagreement.

**8. CONTRACTOR PROVIDED DOCUMENTS for LBP AND ASBESTOS:** Contractor will be required to submit all relative documents for corrective action when Lead Base Paint or Asbestos is scheduled to be removed from the respective project.

- - END OF SECTION - -

# SECTION 1C

# ENVIRONMENTAL SPECIAL CONDITIONS

INDEX

1. Hazardous Material and Material Safety Data Sheets
2. Report of Hazardous Materials Consumed
3. Disposal of Regulated Waste
4. Spill Prevention Control and Countermeasures (SPCC) Plan Coordination
5. Waste Water Discharges
6. National Pollutant Discharge Elimination System (NPDES) Permits for Construction Activities
7. NPDES Permit for Dewatering Operations
8. Delivery & Storage of Material
9. Air Program Requirements
10. Non-Hazardous Solid Waste Diversion
11. Archeological Discoveries
12. Testing
13. Dust Control
14. Clean up

## 1. HAZARDOUS MATERIALS AND MATERIAL SAFETY DATA SHEETS.

1.1 Definitions:

Priority chemical means a chemical identified by the interagency Environmental Leadership Workgroup or, alternatively, by an agency pursuant to Section 503 of Executive Order 13148 of April 21, 2000, Greening the Government through Leadership in Environmental Management.

Toxic chemical means a chemical or chemical category in listed in 40 CFR 372.65.

Hazardous material includes the following:

- Hazardous materials as defined by The Department of Transportation in 29 CFR 172,

- Hazardous substances, extremely hazardous substances, toxic chemicals and hazardous waste as defined by EPA in Title III of the Superfund Amendments and Reauthorization Act and the Resource Conservation and Recovery Act, in 40 CFR, and

- Hazardous Chemicals and Hazardous Substances as defined by the Occupational Safety and Health Administration (OSHA) in 29 CFR.

1.2 Executive Order 13148 requires Federal facilities to comply with the provisions of the Emergency Planning and Community Right-to-Know Act of 1986 (EPCRA) (42 U.S.C. 11001-11050) and the Pollution Prevention Act of 1990 (PPA) (42 U.S.C. 13101-13109).

Federal Acquisition Regulation (FAR) 52.223-5 -- Pollution Prevention and Right-to-Know Information requires contractors to provide all information needed by the Federal facility to comply with the following:

(1) The emergency planning reporting requirements of Section 302 of EPCRA.

(2) The emergency notice requirements of Section 304 of EPCRA

(3) The list of Material Safety Data Sheets required by Section 311 of EPCRA

(4) The emergency and hazardous chemical inventory forms of Section 312 of EPCRA

(5) The toxic chemical release inventory of Section 313 of EPCRA, which includes the reduction and recycling information required by Section 6607 of PPA

(6) The toxic chemical, priority chemical, and hazardous substance release and use reduction goals of Section 502 and 503 of Executive Order 13148.

1.3 Offutt AFB has implemented an Environmental Management System (EMS) and every contract employee that will physically work on the installation under a contract that incorporates FAR 52.223-5 is required to take initial EMS awareness training. When this clause applies, the Government will provide the contractor with a Power Point Training Presentation entitled: Base EMS Awareness Level Training. The Contractor shall ensure all employees, prior to their performance of any contract work on the installation under a contract containing the above noted clause, will read and acknowledge this training. The employee's acknowledgement is required to be in writing and must be provided to the Contracting Officer (CO) for inclusion in the contract file NLT 10 days following the effective date of the contract. To accomplish this requirement, the contractor shall have all employees legibly print and sign their name to a dated training sign-in sheet that is entitled: Base EMS Awareness Level Training for _____ ***(contractor shall insert project number, project name and contract number)*** and contains a statement basically the same as "I have reviewed and understand the above entitled training." Any new or replacement employee shall review and acknowledge this training prior to commencing work on Offutt AFB and the proof of acknowledgement shall be forwarded to the CO no later than the end of the week said employee begins work. This training is a one hour requirement. Questions regarding the training should be addressed to:

Mr. Karl Morris
55 CES/CEV
106 Peacekeeper Dr.
Offutt AFB, NE 68113
Phone: (402) 294-4087
Email: karl.morris@offutt.af.mil

The Contractor shall comply with the Environmental Management System (EMS) Requirements (Paragraph 1.2, Section 1C of the Specifications); complete the report identified in the Contract Data Requirements List (CDRL) DD Form 1423-1) and forward the report as required in accordance with the distribution on the CDRL.

1.4 Material Safety Data Sheets

Fifteen (15) working days prior to bringing hazardous materials onto Offutt AFB the contractor shall submit the Material Safety Data Sheets and usage information on all hazardous materials they (including all subcontractors) intend to use throughout the life of the contract. The 55th CE's Construction Management Element (55 CES/CECC) person assigned to that contract, or the contract's Quality Assurance Evaluator (QAE), will review the information with the Environmental Flight (55 CES/CEV) and then provide the information to the HAZMART Warehouse for entry into EMIS. In addition, contractors that use hazardous materials are required to complete Offutt's hazardous waste training course (see Disposal of Regulated Waste, Paragraph 3, below) prior to bringing hazardous materials on base.

1.5 Storage and Handling

All hazardous and non-hazardous materials shall be stored and handled in accordance with all OSHA and NFPA requirements. In addition to those requirements, all storage and staging areas shall be provided with secondary containment and shall be located away from traffic areas and protected from any incursion into the area that could damage the containers or cause a spill. Secondary containment shall be provided to contain 110% of the volume of the largest container stored so as to contain any spills or leaks. In addition, when outdoors all hazardous and non-hazardous materials shall be covered to avoid contact with the elements and precipitation from entering the secondary containment structure.

1.6 Hazardous Material Storage Plan

Prior to bringing any hazardous material on base, the contractor shall submit for CEV approval a hazardous material (to include hazardous waste (see Section 3.0)) storage plan stating how the contractor shall meet the above requirements. Plan shall include method of storage handling, staging, and use of the materials

1.7 Spill Reporting

Contractor shall immediately report all spills of hazardous materials to the Fire Department and to CEV. In addition, the contractor is responsible for meeting the reporting requirements of Nebraska Administrative Code Title 126 Chapter 18 *Releases of Oil or Hazardous Substances*. Copies of any reports made to the Nebraska Department of Environmental Quality or The National Response Center shall be provided to CEV within 24-hours. Contractor is responsible for the clean up of all spilled material including restoration of the any areas contaminated by the spill including costs incurred by the government for any assistance or remedial action taken by the government on behalf of the contractor. All clean up and restoration shall be done to the satisfaction of the government. Handling and disposal of spill clean-up material shall be in accordance with Paragraph 3.

**2. REPORT OF HAZARDOUS MATERIAL CONSUMED**. Upon completion of project, before 100 percent payment is made, all quantities of consumed hazardous material on this job will be submitted for CEV recordkeeping. If the project is not complete by 1 January, all hazardous material used on this job before that date must be submitted by 1 February and again at the completion of the project before 100 percent payment is made. Hazardous material is defined in Paragraph 1.

## 3. DISPOSAL OF REGULATED WASTES

Contractor shall comply with all federal, state, local, and Offutt AFB regulations and requirements concerning the proper handling, accumulation, and disposal of regulated wastes. These include, but are not limited to:

**Title 40 Code of Federal Regulations (CFR) Parts 260/280 (40 CFR 206-280)-**
Federal solid and hazardous waste regulations.
**Title 49 Code of Federal Regulations (CFR) Parts 171-173 (49 CFR 171-173)-**
Federal transportation regulations.
**Title 40 Code of Federal Regulations (CFR) Part 112 (40 CFR 112)-**
Spill Prevention Control and Countermeasure Plan
**State of Nebraska Administrative Code Title 128-**
State solid and hazardous waste regulations.
**City of Omaha Code Chapter 31-**
City of Omaha sewer standards
**Offutt AFB Hazardous Waste Management Plan-**
Summarizes the hazardous waste accumulation and storage requirements.

### 3.1 Training

The contractor is responsible for ensuring all contract personnel that handle or are exposed to hazardous waste are trained in accordance with the above regulations/requirements. The Offutt AFB Environmental Management Flight (55 CES/CEV telephone # (402) 294-4087) conducts training satisfying the above training requirements at no cost to the contractor. The training is held on the first and third Mondays of each month, except on Federal Holidays, and lasts approximately one hour. Contractor shall submit for CEV records certification of training. At the contractor's option, one representative may attend the above class and then train the remaining contractor personnel. If this option is chosen, the contractor will submit documentation for CEV records that all contractor personnel who handle hazardous waste have been trained.

### 3.2 Accumulation, Storage, and Sampling Wastes

Items that can be considered regulated wastes include, but are not limited to, paints, thinners, solvents, adhesives, acids and caustics compounds, fuels and oils intended for disposal, lead acid batteries, fluorescent light tubes, etc. The contractor shall be responsible for identifying, storing, and accumulating all regulated wastes generated during the course of the project. Contractor is

also responsible for sampling and analysis of all containers of wastes generated to obtain an accurate profile of any hazardous characteristics. Sampling and analysis shall be conducted by an accredited laboratory at no additional cost to the government. Based on that analysis, wastes shall be identified as hazardous, prohibited, or non-regulated wastes. Storage of wastes shall be in accordance with Paragraph 1.4 and Offutt's Hazardous Waste Management Plan.

3.3 Containers and Containment

Contractor shall supply all containers which shall be new or refurbished and labeled as DOT approved. Containers shall be compatible with the material/waste stored in them. Secondary containment (meeting the requirements of paragraph 1) for all containers shall be provided and all additional storage and handling requirements called out in the Offutt hazardous waste training guide shall be followed.

3.4 Disposal Procedures

For wastes identified as hazardous, the contractor shall submit a request for disposal and provide test results and waste characterization to 55 CES/CEV two weeks before disposal. If hazardous waste is accumulated in quantities equal to or exceeding 55 gallons, or prior to completion of this Contract, the contractor shall deliver all hazardous waste for disposal within three days to either one of the 90-Day accumulation points or to the Offutt AFB Defense Reutilization and Marketing Office (DRMO). If full waste characterization is not available, the contractor will store the waste at one of the 90-day accumulation points; when analysis is complete, the contractor will subsequently move the waste to DRMO. All drum movements to any 90-day or to DRMO by the contractor will be at no additional cost to the government. Disposal cost for hazardous waste disposal shall be the responsibility of the government.

Prohibited wastes are liquids or liquids containing solids that are prohibited by Omaha code from being disposed of to the sanitary sewer. Contractor shall submit test results for CEV to determine proper disposal. Contractor will be directed to deliver the container to either one of the 90-day accumulation points or to the Conforming Storage Facility on base at no additional charge to the government. Disposal cost for prohibited waste disposal shall be the responsibility of the government.

Special wastes are wastes that require prior approval from the landfill to be disposed of. These wastes (e.g. fuel contaminated soil) shall be disposed of at either the Douglas County or Butler County Landfills. The contractor must submit a request for disposal along with all required testing analysis and receive approval of CEV for disposal of special wastes to either landfill. Contractor is responsible for all costs associated with disposal of special wastes. Non-regulated wastes (e.g. C and D wastes) shall be disposed of at an NDEQ approved landfill. Contractor is responsible for all costs associated with the disposal of non-regulated wastes.

## 4. SPILL PREVENTION CONTROL AND COUNTERMEASURES (SPCC) PLAN:

4.1 Condition of Equipment

All contractor equipment (including containers and vehicles) shall be kept in good condition while on the base. Any equipment found leaking or dripping any hazardous material (e.g. oil, fuel, etc.) shall be taken out of service immediately until repaired and all spilled material shall be cleaned up in accordance with the requirements called out under the Hazardous Material section.

4.2 SPCC Plan

The contractor is responsible for handling, using, and storing all regulated petroleum oil (including fuel) on the facility in accordance with the requirements of 40 CFR 112 and Offutt's Spill Prevention Control and Countermeasures Plan. Prior to bringing any petroleum storage container on base the contractor shall submit certification for CEV approval that the owner of the container has in-place a SPCC plan in accordance with 40 CFR 112 and that the container is a part of that plan. Contractor shall submit a Petroleum Container Storage Plan for CEV approval. The plan shall include the following information:
(a) Site plan with the location of containers,
(b) Capacity of each container,
(c) Contents of each container,
(d) Containers must have secondary containment that will contain 110% of the capacity of the container. If secondary containment is not available the container must be labeled with a certification that it has passed integrity testing performed in accordance with 40 CFR 112 within the past two years.
(e) List (type and quantity) of spill control and clean-up materials in sufficient quantity to contain and cleanup the quantity of regulated petroleum products stored.
(f) Certification the tanks meet all of the following requirements:
- The capacity of the tank shall not exceed 12,000 gal (45,420 L).
- All piping connections to the tank shall be made above the normal maximum liquid level.
- Means shall be provided to prevent the release of liquid from the tank by siphon flow.
- Means shall be provided for determining the level of liquid in the tank. This means shall be accessible to the delivery operator.
- Means shall be provided to prevent overfilling by sounding an alarm when the liquid level in the tank reaches 90 percent of capacity and by automatically stopping delivery of liquid to the tank when the liquid level in the tank reaches 95 percent of capacity. In no case shall these provisions restrict or interfere with the proper functioning of the normal vent or the emergency vent.

## 5. WASTE WATER DISCHARGES.

Any release of waste water onto the ground or into Waters of the State from Offutt's sanitary sewer collection system shall be immediately reported to the contracting officer, the contract inspector, and CEV. The report shall include the following information:
- Location of release,

- Time of release,
- Cause of release,
- Amount released,
- Corrective actions taken.

The contractor is responsible for the cost of all cleanup associated with any release. A written report containing the same information as the verbal report shall be submitted for CEV records within 24-hours of the release.

## 6. NATIONAL POLLUTANT DISCHARGE ELIMINATION SYSTEM (NPDES) PERMITS FOR CONSTRUCTION ACTIVITIES.

Construction activities (including other land-disturbing activities) that disturb one acre or more are regulated under the NPDES storm water program and require a NPDES Permit for Storm Water Discharges from a Construction Site. This includes smaller sites that are part of a larger common plan of development that will or has the potential to disturb 1 acre or more of land over the duration of the contract. The contractor is responsible for all material and labor costs associated with the required permit. A copy of the standard permit for construction sites is available on the NDEQ web site.

### 6.1 Permit Application

Operators of regulated construction sites are required to obtain permit coverage from the Nebraska Department of Environmental Quality (NDEQ) and to develop and implement a Storm Water Pollution Prevention Plan (SWPPP) in accordance with the permit. A copy of the Construction Storm Water- Notice of Intent (CSW-NOI) submittal and the SWPPP required by NDEQ shall also be submitted for approval by 55 CES/CEV. Upon approval from CEV and receipt of the CSW Permit issued by NDEQ a copy shall be submitted for CEV recordkeeping.

### 6.2 Storm Water Pollution Prevention Plan (SWPPP)

In addition to the NPDES requirements to be included in the SWPPP, the following items shall also be addressed:

- Spill prevention and control for materials and wastes,

- Construction debris and litter management,

- Concrete waste management (including rinsing concrete from trucks),

- Sanitary/septic waste management,

- Liquid waste management.

Prior to beginning construction the contractor shall have both a NDEQ CSW-NPDES Permit and approval of the SWPPP from CEV.

6.3 Grading and Erosion Control

Temporary and permanent structural practices shall be installed in accordance with the City of Omaha Soil Erosion and Sediment Control Manual (copies available from the city of Omaha Public Works Department) and maintained in accordance with the issued NPDES permit requirements to eliminate sediment and other contaminants from leaving the construction site. Documentation of all inspections required by the permit shall be kept on site in accordance with the permit and copies of all documentation shall be submitted for CEV recordkeeping within two (2) days of the completion of the document. Any deficiencies with the SWPPP discovered during the course of the project shall be corrected immediately.

6.4 Construction Activities Less Than One Acre

Construction activities that disturb less than one acre require the submittal, for CEV approval, of a SWPPP (IAW NDEQ permit requirements) and the installation and maintenance of temporary and permanent structural practices (IAW the City of Omaha Soil Erosion and Sediment Control Manual) to eliminate sediment and other contaminants from leaving the construction site. Inspections of the control structures are required every month and after any 0.5 inch or greater rain.

## 7. NPDES PERMIT FOR DEWATERING OPERATIONS

All dewatering operations (including, but not limited to, pumping from an excavation, lowering the groundwater level via well points, hydrostatic testing, etc.) require dewatering permits issued by NDEQ. The contractor is responsible for obtaining and meeting all the requirements of dewatering permits. A copy of all NOI for the permit shall be submitted to CEV for review and approval. No dewatering operation shall occur until a permit has been issued by NDEQ to the contractor and submitted to CEV for verification. Copies of all reports, inspections, analytical testing, etc. required as part of the permit requirements shall be submitted to CEV within two (2) days of completion. If any of these items are to be submitted to NDEQ, a copy of the submittal letter to NDEQ will accompany the CEV submittal. For dewatering in areas with contaminated groundwater, the contractor shall be responsible for weekly sampling and analysis for priority pollutants (VOCs and semi-VOCs, metals, etc.) in accordance with the permit requirements. In addition, the contractor shall submit for CEV approval the method of disposal of the water. Generally, if analysis indicates the contamination in the water exceeds the permit limits, the contractor, with the approval of CEV, can discharge the water to the sanitary sewer. If analysis indicates contamination levels below the permit limits, the contractor, upon CEV approval, can discharge the water to the storm sewer. The contractor shall be responsible for all the material and labor cost associated with the requirements of the permit and discharging the water to either type of sewer based on the weekly analytical results. The contractor is not responsible for any sewer fees for disposal of effluent from a dewatering operation to the sanitary sewer.

**8. DELIVERY AND STORAGE OF MATERIAL**. The contractor shall use only established roadways, entrances, and exits as prescribed by the Government Construction Representative.

Materials and equipment shall be stored only in designated areas, and shall be transported directly to and from the construction site under strict regulations as prescribed by the Government Construction Representative. Materials quantity receipt shall be given to the Government Construction Representative upon delivery of materials to job site.

## 9. AIR PROGRAM REQUIREMENTS

The following air emission units, when involved as part of a construction project, require issuance of a construction permit (in accordance with NDEQ Title 129, Chapter 17, Section 001) prior to beginning construction work associated with the emission unit. The permit application will be completed by 55 CES/CEVC after being notified by the contractor of this need/requirement. The contractor must allow approximately 90 days between the start of the permit application and issuance of the permit:

- Specs for a generator (emergency or permanent) with an engine power greater than 220 KW
- Incinerator installation
- Installation/modifications to bulk storage tanks
- Construction/modifications to the fire training simulator
- Construction of a single boiler greater than 10 million BTU/hr
- Construction of a paint booth or modifications to an existing booth

Any questions concerning the need for an air construction permit can be directed to 55 CES/CEVC, 294-4087.

## 10. NONHAZARDOUS SOLID WASTE DIVERSIONS.

In keeping with the Air Force solid waste diversion rate goal, the contractor will divert at least 40% of the construction and demolition debris generated during the project. The waste may be reused, recycled, sent to a waste-to-energy incinerator, or managed in another approved manner that keeps it from going to a landfill. Some items that can be recycled or reused are scrap metal, cardboard, concrete, wood, and asphalt. The contractor will track and report the amount of construction and demolition debris disposed in a landfill, recycled, or sent to a waste-to-energy incinerator each quarter. The attached form will be completed and submitted to Construction Management no later than the first working day after the end of each quarter (31 Dec, 31 Mar, 30 Jun, 30 Sept).

# NON-HAZARDOUS SOLID WASTE DIVERSION

| **Contact information** | |
|---|---|
| Name | |
| Phone | |
| Date | |
| Fiscal Year Quarter<br>Q1 =October 1 - December 31<br>Q2 = January 1 - March 31<br>Q3= April 1 - June 30<br>Q4 = July 1 - September 30 | |
| Organization (e.g. MILCON, SABER, 140th ANG, other) | |
| Project Name(s) (e.g. construction of Wing Headquarters) | |
| **Construction and demolition related solid waste disposal data**<br>(Do not include base-wide routine solid waste picked up by BFI) | |
| Total solid waste disposed (tons) | |
| Total cost for solid waste disposal | |
| **Construction and demolition related recycling data**<br>(Do not include base-wide, routine recycling such as aluminum cans and paper.) | |
| Total recycled (tons) | |
| Total cost for recycling | |
| Total revenue for recycling | |
| Materials recycled (provide tons, cost, and revenue for each) | |
| Asphalt | |
| Concrete | |
| Wood scrap | |
| Metal | |
| Soil | |
| Other recycling (Do not include base-wide, routine recycling such as aluminum cans and paper.) Describe and provide tons. | |
| Items reused that would otherwise be disposed. Please describe and provide tons. | |
| Pollution prevention accomplishments (Describe all efforts that reduced waste or saved resources) | |
| Green purchasing accomplishments (Describe energy efficient, environmentally friendly, bio-based, and recycled products used and/or purchased.) | |

**11. ARCHEOLOGICAL DISCOVERIES**. If archeological resources are encountered during construction, the Contractor will immediately cease operations and report their findings to the Government Construction Representative. Procedures are outlined in Air Force Instruction 32-7065 (Cultural Resources Management), Paragraph 2.8, and will then be followed in final disposition of these items.

**12. TESTING**. All material/waste sampling and testing as required in the specifications or as required by the Government Construction Representative and retest required due to failure of original test shall be performed by a laboratory or laboratories employed by the contractor at no additional cost to the Government in accordance with EPA Test Methods SW-846.

**13. DUST CONTROL**. Control of dust during construction, demolition activities, debris removal and any other activities required as a part of the work under this contract must be thorough and complete. For outside construction: dust/particulate matter associated with the construction process is not to become airborne in such quantities and concentrations that it remains visible in the ambient air beyond the boundaries of the construction site. Dust control shall be addressed in the Storm Water Pollution Prevention Plan (SWPPP) as required by NPDES subsection below.

**14. CLEAN UP**. Clean up of all items shall be accomplished by the end of each day. The contractor will also be responsible for cleaning mud, rock, and debris deposited by the contractor's, sub-contractor's, or supplier's vehicles from all roads in the construction areas used by these vehicles.

- - END OF SECTION - -

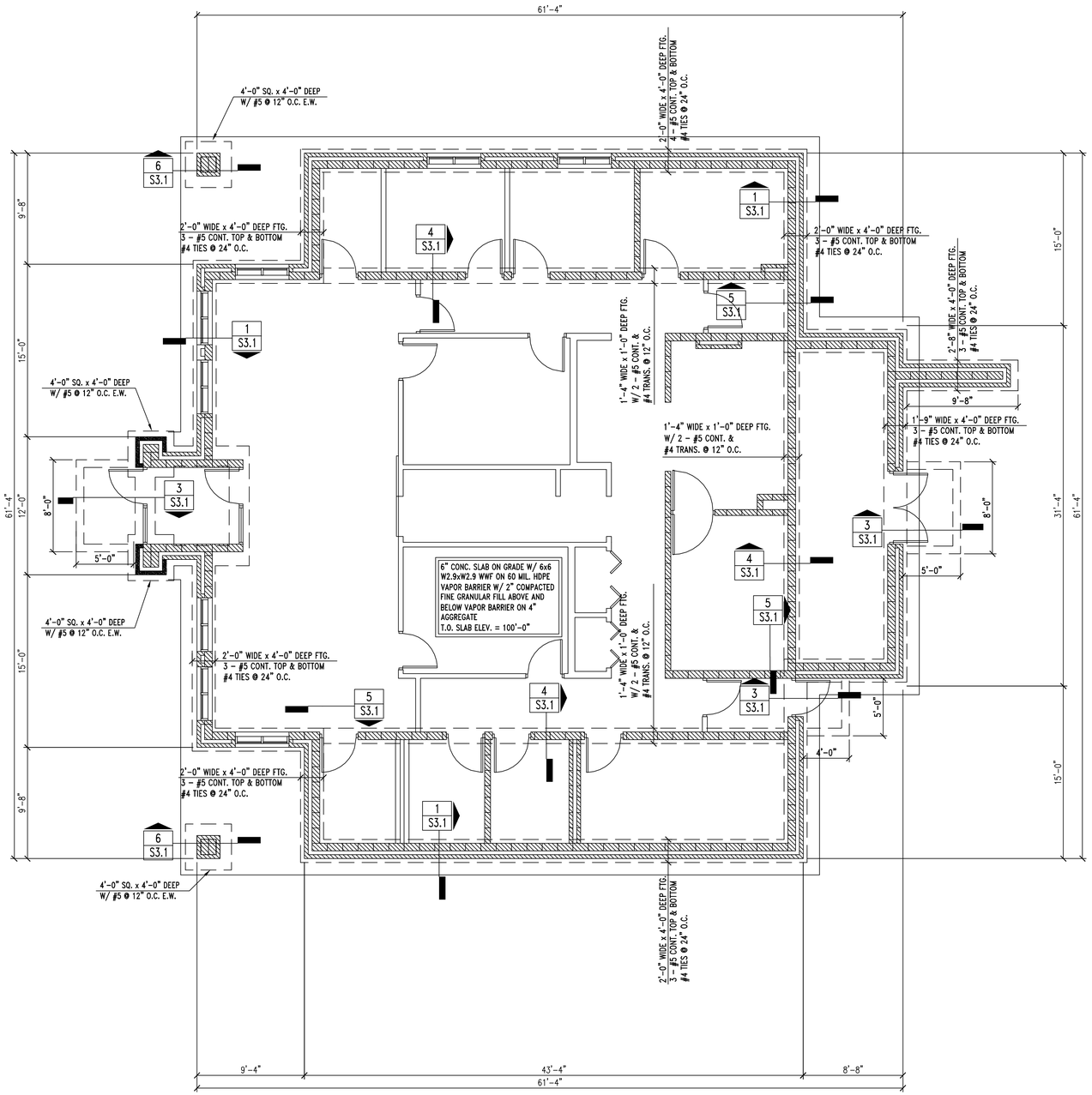


1 S1.1 FOUNDATION PLAN

SCALE:3/16" = 1'-0"

SHEET NOTES:

1. TOP OF FOOTINGS SHALL BE 99'-4" UNLESS NOTED OTHERWISE.
2. SEE GEOTECHNICAL REPORT FOR SUBGRADE CRITERIA AND INFROMATION ON SUBGRADE VENTILATION SYSTEM.
3. LOAD BEARING MASONRY WALLS SHALL BE 8" CMU BLOCK W/ #5 VERT. BARS @ 48" O.C. SEE GENERAL STRUCTURAL NOTES ON SHEET S3.0 FOR BLOCK, GROUT, AND MORTOR INFORMATION.
4. SEE DETAIL 6/S3.1 FOR UNDERSLAB VENT PIPE PENETRATION THROUGH THE TRENCH FOOTING. COORDINATE SIZE AND LOCATION OF VENT PIPE WITH GEOTECHNICAL ENGINEER.
5. CONTRACTOR IS RESPONSIBLE FOR RETAINING AN INDEPENDENT THIRD PARTY INSPECTOR TO PERFORM THE FOLLOWING MATERIAL AND CONSTRUCTION INSPECTIONS. REPORTS FROM INSPECTORS SHALL BE PROVIDED DIRECTLY TO ARCHTECT AND ENGINEER OF RECORD.
6. CONCRETE INSPECTION
   - -INSPECTION OF REINFORCING STEEL_____PERIODIC
   - -VERIFYING USE OF REQUIRED DESIGN MIX_____PERIODIC
   - -AT THE TIME OF FRESH CONCRETE IS SAMPLED TO_____SEE SPEC. FOR FREQUENCY FABRICATE SPECIMENS FOR STRENGTH TESTS, PERFORM SLUMP AND AIR CONTENT TESTS, AND DETERMINE THE TEMPERATURE OF THE CONCRETE.
   - -ERECTION OF PRECAST CONCRETE MEMEBERS_____PERIODIC
7. MASONRY INSPECTION
   - -SIZE & LOCATION OF STRUCTURAL ELEMENTS_____PERIODIC
   - -TYPE, SIZE, & LOCATION OF ANCHORS, INCLUDING_____PERIODIC OTHER DETAILS OF ANCHORAGE OF MASONRY TO STRUCTURAL MEMBERS, FRAMES OR OTHER CONST.
   - -SPECIFIED SIZE, GRADE, & TYPE OF REINFORCEMENT_____PERIODIC
   - -PROTECTION OF MASONRY DURING COLD WEATHER (BELOW_____PERIODIC 40 DEGREES F) OR HOT WEATHER (ABOVE 90 DEGREES F)
8. METAL PLATED WOOD ROOF TRUSSES
   - -FABRICATOR QUALIFICATIONS: SHOP THAT PARTICIPATES IN A RECOGNIZED QUALITY-ASSURANCE PROGRAM THAT COMPLIES WITH QUALITY-CONTROL PROCEDURES IN TPI 1 AND THAT INVOLVES THIRD-PARTY INSPECTION BY AN INDEPENDENT TESTING AND INSPECTING AGENCY ACCEPTABLE TO ARCHITECT AND AUTHORITIES HAVING JURISDICTION.

Offutt
Air Force Base

APPROVED

| SIGNATURE | OFFICE |
|---|---|
| | |

COORDINATION

| | |
|---|---|
| | |

"SIGNING OF THE COVER SHEET CONSTITUTES COORDINATION OF ALL DRAWINGS IN THIS PROJECT; SUBSEQUENT SHEETS NEED NOT BE SIGNED."

DESIGN FIRM

ARCHITECT
ALLEY POYNER MACCHIETTO ARCHITECTURE, P.C.

MECHANICAL / ELECTRICAL
MORRISSEY ENGINEERING

STRUCTURAL
PERFORMANCE ENGINEERING

CIVIL ENGINEERING
KIRKHAM MICHAEL

| Designer | Project Manager |
|---|---|
| JRS | ATM |
| Drafter | Date |
| JRS | 30-MAY-2008 |

| REVISION | BY/DATE |
|---|---|
| | |

SHEET TITLE

S1.1
FOUNDATION PLAN

| SHEET | OF |
|---|---|
| 17 | 32 |

PROJECT TITLE

CONSTRUCT VETERINARY CLINIC, B595

Project Number
SGBP-07-0019

| Drawing Number | Facility Number |
|---|---|
| OFF-B-6052 | 595 |

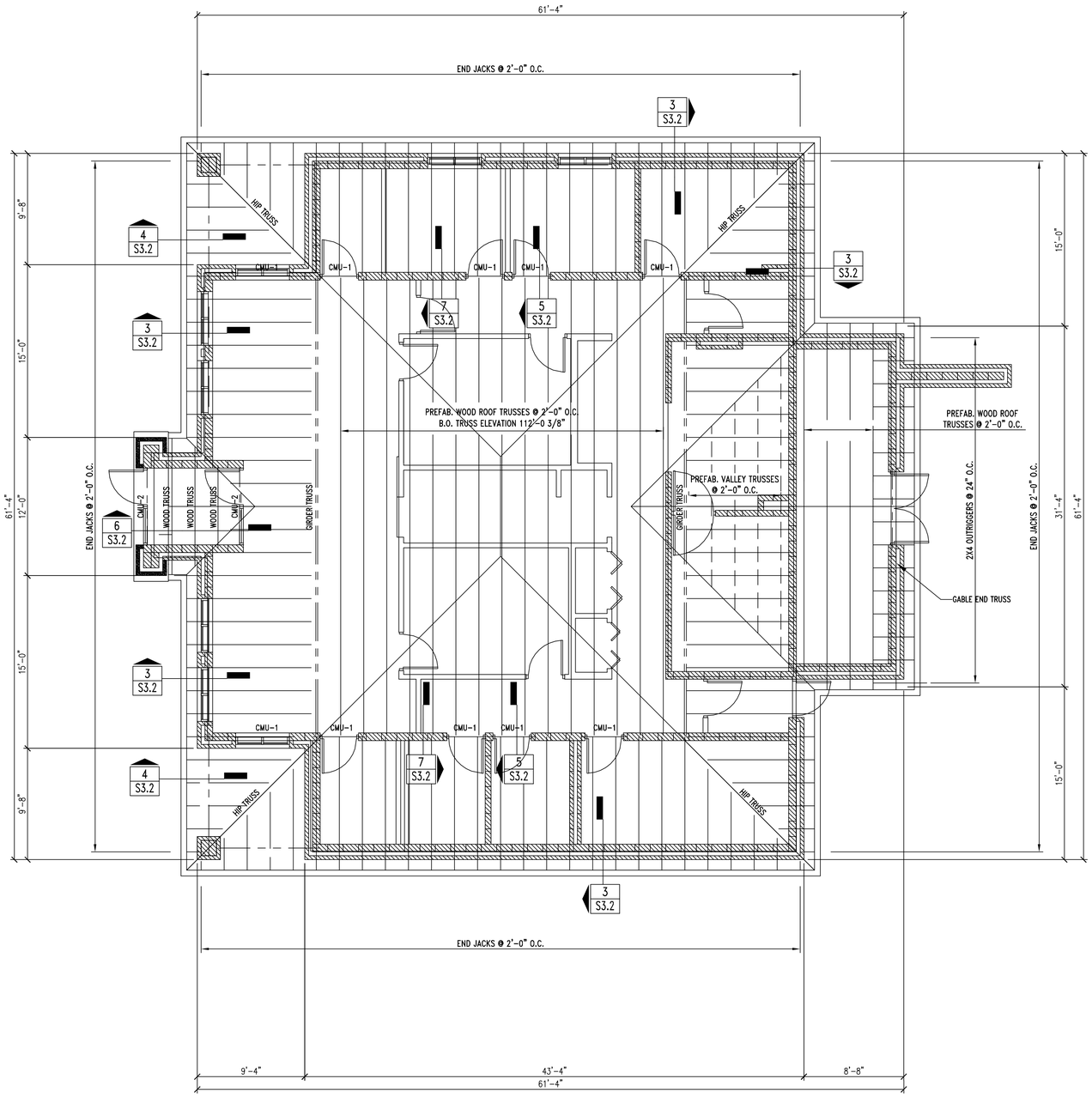


NOTES:
1. TRUSS BEARING ELEVATION AT PERIMETER WALLS SHALL BE 109'-5 1/2" UNLESS NOTED OTHERWISE.

1 / S2.1 ROOF FRAMING PLAN
SCALE:3/16" = 1'-0"

Offutt
Air Force Base

APPROVED

| SIGNATURE | OFFICE |
|---|---|

COORDINATION

"SIGNING OF THE COVER SHEET CONSTITUTES COORDINATION OF ALL DRAWINGS IN THIS PROJECT; SUBSEQUENT SHEETS NEED NOT BE SIGNED."

DESIGN FIRM

ARCHITECT
ALLEY POYNER MACCHIETTO ARCHITECTURE, P.C.

MECHANICAL / ELECTRICAL
MORRISSEY ENGINEERING

STRUCTURAL
PERFORMANCE ENGINEERING

CIVIL ENGINEERING
KIRKHAM MICHAEL

| Designer | Project Manager |
|---|---|
| JRS | ATM |
| Drafter | Date |
| JRS | 30-MAY-2008 |

| REVISION | BY/DATE |
|---|---|

SHEET TITLE
S2.1
ROOF FRAMING PLAN

SHEET 18 OF 32

PROJECT TITLE
CONSTRUCT VETERINARY CLINIC, B595

Project Number
SGBP-07-0019

| Drawing Number | Facility Number |
|---|---|
| OFF-B-6052 | 595 |

# GENERAL STRUCTURAL NOTES:

A. DESIGN DATA:

DESIGN CODE: IBC 2000

CONCRETE 28-DAY STRENGTH: F'C = 4,000 PSI

MISCELLANEOUS ROLLED SECTIONS AND PLATES (ANGLES, CHANNELS, PLATES, ETC.) ASTM A36

PLAIN BOLTS AND ANCHORS ASTM A307

REINFORCING STEEL ASTM A615 FY = 60,000 PSI

WELDED WIRE FABRIC ASTM A185

CONCRETE MASONRY UNITS (GRADE N TYPE 1) F'M = 1,500 PSI

MORTAR TYPE M OR S
GROUT 28-DAY STRENGTH F'C = 2,000 PSI

ALLOWABLE SOIL BEARING CAPACITY 1500 PSF

DESIGN LOADS
ROOFS DL = 20 PSF *LL = 25 PSF

*INCREASE LIVE LOAD FOR SNOW DRIFTING AS REQUIRED IN CONFORMANCE WITH THE AMERICAN SOCIETY OF CIVIL ENGINEERS ANSI/ASCE 7-02.

WIND LOADING CRITERIA (2000 IBC)
90 MPH, EXPOSURE B, I = 1.00

B. FOUNDATION WORK:

1. THE GEOTECHNICAL REPORT PREPARED BY THIELE GEOTECH INC., PROJ. #07578.00 IS AVAILABLE AND SHALL BE REVIEWED BY THE CONTRACTOR. SEE SPECIFICATIONS FOR OVEREXCAVATION AND RECOMPACTION REQUIREMENTS.
2. SUBSOILS SUPPORTING OR IN DIRECT CONTACT WITH FOOTINGS, SLABS-ON-GRADE, OR OTHER FOUNDATION ELEMENTS SHALL BE PROTECTED AGAINST FREEZING CONDITIONS THAT COULD CAUSE MOVEMENT OR OTHER DETRIMENTAL EFFECT TO THE STRUCTURE AS A WHOLE OR TO ANY OF ITS COMPONENT PARTS.
3. WHEN WORKING NEAR EXISTING AND/OR NEW CONSTRUCTION, THE CONTRACTOR SHALL EXERCISE EXTREME CAUTION SO AS NOT TO UNDERMINE, DISTURB, DAMAGE OR, IN ANY WAY, CAUSE UNDESIRABLE MOVEMENT, CRACKING, AND/OR SETTLEMENT OF THE ADJACENT CONSTRUCTION.
4. ALL SLABS ON GRADE SHALL BEAR ON UNDISTURBED VIRGIN SOIL OR PROPERLY COMPACTED BACKFILL/GRANULAR FILL. ANY UNACCEPTABLE UNDISTURBED VIRGIN SOIL OR BACKFILL/GRANULAR FILL, AS DETERMINED BY THE OWNER'S GEOTECHNICAL ENGINEER, SHALL BE REMOVED AND REPLACED AS REQUIRED BY THE GEOTECHNICAL ENGINEER.
5. CONTRACTOR SHALL COORDINATE FOOTING ELEVATIONS WITH FINAL GRADING PLAN TO PROVIDE A MINIMUM OF 48" OF GRADE ABOVE THE BOTTOM OF ALL FOOTINGS FOR FROST PROTECTION.

C. CONCRETE:

1. FOR REINFORCEMENT DEVELOPMENT LENGTH AND SPLICE LENGTH SEE TYPICAL REINFORCEMENT TABLE ON THIS SHEET.
2. PROVIDE CORNER BARS IN WALLS AND FOOTINGS THE SAME SIZE AND NUMBER AS THE CONTINUOUS REINFORCING.
3. REINFORCING IN FOOTINGS SHALL BE ACCURATELY PLACED BEFORE PLACING CONCRETE. DO NOT FLOAT REINFORCING INTO FOOTINGS
4. CONCRETE SHALL BE REGULAR WEIGHT (144 PCF) WITH TYPE I CEMENT, POTABLE WATER, AND AGGREGATES CONFORMING TO REQUIREMENTS OF NEBRASKA DEPARTMENT OF ROADS FOR 47-B CONCRETE, UNLESS NOTED OTHERWISE. CONCRETE SHALL CONFORM TO ACI 301-99.
5. MECHANICALLY VIBRATE CONCRETE, EXCEPT THAT SLABS ON GRADE NEED BE VIBRATED ONLY AROUND UNDERFLOOR DUCTS AND OTHER ITEMS EMBEDDED IN THE SLAB.
6. DO NOT PLACE PIPES, DUCTS, OR CHASES IN STRUCTURAL CONCRETE WITHOUT APPROVAL OF THE ARCHITECT/ENGINEER. SEE ARCHITECTURAL, MECHANICAL, AND ELECTRICAL DRAWINGS FOR LOCATIONS.
7. CONSTRUCT FORMWORK SO CONCRETE MEMBERS AND STRUCTURES ARE OF SIZE, SHAPE, ALIGNMENT, ELEVATION, AND POSITION INDICATED, WITHIN TOLERANCE LIMITS OF ACI 117.
8. FINISH CONCRETE SUSPENDED SLABS AND SLABS-ON-GRADE PER THE FOLLOWING CRITERIA ACCORDING TO ASTM E 1155. COMPLY WITH ACI 302.1R RECOMMENDATIONS FOR SCREEDING, RESTRAIGHTENING, AND FINISHING OPERATIONS FOR CONCRETE SURFACES. DO NOT WET CONCRETE SURFACES.

A. SLABS-ON-GRADE – SPECIFIED OVERALL VALUES OF FLATNESS, F(F) 35; AND OF LEVELNESS, F(L) 25; WITH MINIMUM LOCAL VALUES OF FLATNESS, F(F) 24; AND OF LEVELNESS, F(L) 17

B. SUSPENDED SLABS – SPECIFIED OVERALL VALUES OF FLATNESS, F(F) 30; AND OF LEVELNESS, F(L) 20; WITH MINIMUM LOCAL VALUES OF FLATNESS, F(F) 24; AND OF LEVELNESS, F(L) 15

9. CONTROL JOINTS IN SLAB-ON-GRADE SHALL BE PLACED AT COLUMN-LINE INTERSECTIONS AND AS NECESSARY TO NOT EXCEED A SPACING OF 36 TIMES THE SLAB THICKNESS. MAXIMUM ASPECT RATIO SHALL BE 1.5 TO 1.0 UNLESS NOTED OTHERWISE.
10. THICKEN SLABS ON GRADE UNDER NON-LOAD BEARING MASONRY WALLS TO 8-INCHES AND REINFORCE WITH 2-#4 CONTINUOUS.
11. ALL CONSTRUCTION JOINTS IN CONCRETE WALLS SHALL HAVE A 2" X 4" CONTINUOUS KEYWAY. ALL CONSTRUCTION JOINTS, EXCEPT THOSE DETAILED, SHALL HAVE ARCHITECT/ENGINEER APPROVAL. SEE SPECIFICATIONS FOR OTHER CONSTRUCTION JOINT REQUIREMENTS.
12. ALL REINFORCING STEEL SHALL BE DEFORMED NEW BILLETS BARS (A615, GRADE 60), BENT COLD, AND DETAILED, FABRICATED, AND HELD IN PLACE IN ACCORDANCE WITH THE "MANUAL OF STANDARD PRACTICE FOR DETAILING REINFORCED CONCRETE STRUCTURES" (ACI 315 – LATEST EDITION) EXCEPT AS OTHERWISE DETAILED OR SPECIFIED.
13. THE FOLLOWING MINIMUM CONCRETE COVER SHALL BE PROVIDED FOR REINFORCEMENT, UNLESS NOTED OTHERWISE:
    CONCRETE CAST AGAINST AND PERMANENTLY EXPOSED TO EARTH: 3"
    CONCRETE EXPOSED TO EARTH OR WEATHER: 2"
    CONCRETE NOT EXPOSED TO WEATHER OR IN CONTACT WITH GROUND:
        SLABS AND WALLS: 1"
        BEAMS AND COLUMNS: 2"
14. UNLESS NOTED OTHERWISE, SLABS ON GRADE SHALL BE 4" CONCRETE REINFORCED WITH 6 X 6 – W1.4 X W1.4 WELDED WIRE FABRIC ON 4" GRANULAR FILL WITH VAPOR BARRIER.
15. ALL REINFORCING IN SLABS AND WALLS SHALL BE CONTINUOUS UNLESS DETAILED OTHERWISE AND LAP SPLICED ONLY IN REGIONS OF LOW STRESS. ALL BARS SHALL HAVE A STANDARD HOOK WHERE A HOOK IS SHOWN, UNLESS DETAILED OTHERWISE.

D. MASONRY:

1. FURNISH AND CONSTRUCT MASONRY IN ACCORDANCE WITH THE REQUIREMENTS OF THE SPECIFICATIONS FOR MASONRY CONSTRUCTION (ACI 530.1-02/ASCE 6-02/TMS 602-02.
2. LAY MASONRY UNITS IN RUNNING BOND.
3. MAXIMUM GROUT LIFT WITHOUT CLEANOUTS SHALL BE 4'-0" IN BLOCK WALLS AND 8" GROUTED TWO-WYTHE WALLS.
4. 8" WALLS PROVIDE CONTINUOUS FULL HEIGHT VERTICAL REINFORCING IN CENTER OF GROUT AT CENTER OF WALL. TYPICAL REINFORCING SHALL BE 1-#5 AT 4'-0" ON CENTER AND 1-#5 AT CORNERS, INTERSECTIONS, WALL ENDS, DOOR AND WINDOW JAMBS, AND SIDE OF EXPANSION OR CONTROL JOINTS UNLESS NOTED OTHERWISE.
5. GROUT CELLS FULL AT ALL EXPANSION ANCHOR LOCATIONS.
6. PROVIDE LADDER TYPE #9 JOINT REINFORCING AT 16" ON CENTER VERTICAL SPACING IN ALL CONCRETE MASONRY AND UNLESS NOTED OTHERWISE.
7. SPLICE MASONRY WALL REINFORCING 48 BAR DIAMETERS.
8. SPLICE PLACE BOND BEAM REINFORCING AT MASONRY CONTROL/EXPANSION JOINTS AS SHOWN ON MASONRY JOINT DETAIL ON THIS SHEET.
9. PROVIDE CONTINUOUS BOND BEAMS AT ALL BEAM BEARING ELEVATIONS AND AT THE TOP OF ALL WALLS.
10. PROVIDE CONTINUOUS WIRE LATH GROUT BARRIERS BELOW BOND BEAMS.
11. PROVIDE LINTELS OVER ALL OPENINGS AND RECESSES IN MASONRY WALLS. EXTERIOR LINTELS SHALL BE GALVANIZED, UNLESS NOTED OTHERWISE.
12. FOR ALL OPENINGS NOT OTHERWISE DETAILED OR SCHEDULED, MINIMUM LINTELS SHALL BE FOR EACH 4 INCH OF MASONRY WIDTH 1-L 3-1/2 X 3-1/2 X 1/4 FOR SPANS UP TO 4'-0", 1-L 4 X 3-1/2 X 1/4 FOR SPANS UP TO 6'-0" AND 1-L 5 X 3-1/2 X 5/16 FOR SPANS UP TO 8'-0". FOR SPANS LESS THAN 2'-0" PROVIDE A 5/16" PLATE.
13. ALL LINTELS SHALL HAVE A MINIMUM BEARING OF 8 INCHES EACH END.

E. STRUCTURAL LUMBER AND WOOD TRUSSES:

1. WOOD CONSTRUCTION AND DESIGN SHALL CONFORM TO THE REQUIREMENTS OF THE NATIONAL DESIGN SPECIFICATION FOR WOOD CONSTRUCTION (ANSI / AF&PA NDS-1997).
2. WOOD BLOCKING SHALL BE USED AT ALL PLYWOOD ROOF SEAMS.
3. 5/8 INCH ROOF SYSTEM SHALL BE FASTENED TO SUPPORTING MEMBER WITH 10D NAILS AT 4 INCH ON CENTER ALONG ALL EDGES AND 3 INCHES ON CENTER ALONG MASONRY AND EXTERIOR WALLS.
4. SUPPLY ALL NECESSARY HEADERS, BLOCKING, HANGERS, FASTENERS, AND MISCELLANEOUS ACCESSORIES TO PROVIDE A COMPLETE WOOD ROOF FRAMING SYSTEM.
5. STRUCTURAL LUMBER SHALL BE NO.2 AND BETTER DOUGLAS-FIR LARCH FOR WALLS AND HEADERS.
6. DOUBLE STUDS AT ALL OPENINGS IN STUD WALL SYSTEM INCLUDING HEADS, SILLS, AND JAMBS.
7. WOOD FRAME CONSTRUCTION SHALL BE IN ACCORDANCE WITH THE PROVISIONS OF TABLE 2304.9.1 OF THE 2000 IBC.
8. METAL PLATE CONNECTED WOOD TRUSSES SHALL BE DESIGNED IN ACCORDANCE WITH THE GUIDELINES PROVIDED IN THE LATEST EDITION OF THE WTCA HANDBOOK AND ANSI/TPI 1, THE MOST STRINGENT REQUIREMENTS GOVERNING.
9. ROOF FRAMING LAYOUTS ARE PROVIDED TO ILLUSTRATE CONDITIONS FOR CONSTRUCTION AND DO NOT NECESSARILY INDICATE SPECIFIC QUANTITIES OF MATERIALS OR COMPONENTS REQUIRED FOR CONSTRUCTION.
10. TYPICAL BEARING WALL FRAMING SHALL BE 2X6 OR 2X4 (SEE ARCHITECTURAL) AT 24 INCHES ON CENTER WITH HORIZONTAL BLOCKING SPACED AT NO MORE THAN 4'-0" ON CENTER VERTICALLY.

F. OTHER:

1. UNLESS NOTED OTHERWISE, EXPANSION ANCHORS SHALL BE HILTI KWIK BOLT II EXPANSION ANCHORS OR APPROVED EQUAL. EPOXY ANCHORS SHALL BE HILTI STANDARD HAS RODS WITH THE HVA ADHESIVE SYSTEM OR APPROVED EQUAL.
2. VERIFY ALL DIMENSIONS AND CONDITIONS PRIOR TO STARTING WORK. NOTIFY THE ARCHITECT/ENGINEER OF ANY DISCREPANCIES OR INCONSISTENCIES.
3. VERIFY IN FIELD ALL EXISTING CONDITIONS SHOWN ON DRAWINGS.
4. ESTABLISH AND VERIFY ALL OPENINGS AND INSERTS FOR MECHANICAL, ELECTRICAL, AND PLUMBING WITH APPROPRIATE TRADES. PROVIDE ALL TEMPORARY BRACING, SHORING, GUYING, OR OTHER MEANS TO AVOID EXCESSIVE STRESSES AND TO HOLD STRUCTURAL ELEMENTS IN PLACE DURING CONSTRUCTION.
5. ANY ENGINEERING DESIGN PROVIDED BY OTHERS AND SUBMITTED FOR REVIEW SHALL BEAR THE STAMP (AND SIGNATURE) OF AN ENGINEER REGISTERED IN NEBRASKA.

# TYPICAL REINFORCING NOTES:

1. REINFORCING BAR DEVELOPMENT AND LAP SPLICE LENGTH SHALL BE AS SHOWN IN THIS TABLES UNLESS OTHERWISE NOTED ON THE DRAWINGS.

2. THE LENGTHS SHOWN IN THE TABLES ARE BASED ON THE FOLLOWING CONCRETE COVERAGE AND REINFORCING C-C SPACING:
   BEAMS OR COLUMNS:
      COVER (EQUAL OR MORE) 1.0bd (BAR DIAMETER)
      CENTER TO CENTER (C-C) SPACING (EQUAL OR MORE) 2.0bd.
   ALL OTHERS:
      COVER (EQUAL OR MORE) 1.0bd
      CENTER TO CENTER SPACING (EQUAL OR MORE) 3.0bd.

3. TOP BARS ARE DEFINED AS HORIZONTAL REINFORCEMENT SUCH THAT MORE THAN 12 INCHES OF FRESH CONCRETE IS CAST IN THE MEMBER BELOW THE DEVELOPMENT LENGTH OR SPLICE.

4. DEVELOPMENT AND SPLICE LENGTH SHOWN SHALL NOT APPLY IF ANY OF THE FOLLOWING CONDITIONS OCCUR:
   A) f'c < 4000 PSI
   B) fy > 60,000 PSI
   C) THE COVER OR C-C BAR SPACING IS NOT AS LISTED ABOVE
   D) THE REINFORCING STEEL IS EPOXY COATED
   E) LIGHT WEIGHT CONCRETE IS USED.

5. CENTER ON CENTER SPACING (S) IS DEFINED AS BELOW:

REINFORCING DEVELOPMENT AND SPLICES
f'c = 4000 PSI

| BAR SIZE | DEVELOPMENT LENGTH | | SPLICE LENGTH | |
|---|---|---|---|---|
| | OTHER | TOP | OTHER | TOP |
| #3 | 1'-3" | 1'-7" | 1'-7" | 2'-0" |
| #4 | 1'-7" | 2'-1" | 2'-1" | 2'-8" |
| #5 | 2'-0" | 2'-7" | 2'-7" | 3'-4" |
| #6 | 2'-5" | 3'-1" | 3'-1" | 4'-0" |
| #7 | 3'-6" | 4'-6" | 4'-6" | 5'-10" |
| #8 | 4'-0" | 5'-2" | 5'-2" | 6'-8" |
| #9 | 4'-6" | 5'-10" | 5'-10" | 7'-7" |
| #10 | 5'-1" | 6'-7" | 6'-7" | 8'-6" |
| #11 | 5'-7" | 7'-3" | 7'-3" | 9'-5" |

# DEVELOPMENT LENGTH NOTES:

1. WHERE DRAWINGS ARE DETAILED SIMILAR TO DETAIL 2, EXTEND THE EMBEDMENT LENGTH SUCH THAT THE HOOKED BAR CONTACTS THE LAYER OF MAIN REINFORCING SHOWN.

2. EMBEDMENT LENGTHS IN CHART ARE TYPICAL EXCEPT AS NOTED IN DETAIL 2, OR AS INDICATED ON DRAWINGS.

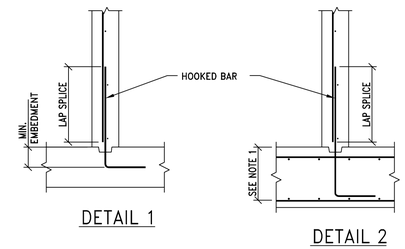


DETAIL 1

DETAIL 2

DEVELOPMENT LENGTHS
HOOKED BARS (f'c = 4000 PSI)

| BAR SIZE | LENGTH OR MIN. EMBEDMENT |
|---|---|
| #3 | 7" |
| #4 | 10" |
| #5 | 1'-0" |
| #6 | 1'-3" |
| #7 | 1'-5" |
| #8 | 1'-7" |
| #9 | 1'-10" |
| #10 | 2'-0" |
| #11 | 2'-3" |

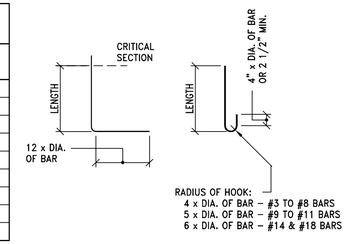


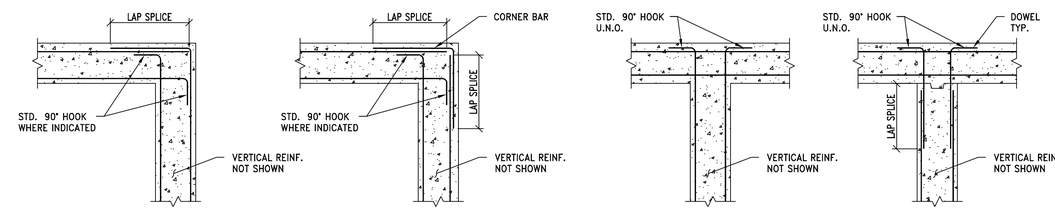


PLAN
OPTION #1

PLAN
OPTION #2

PLAN
WITHOUT CJ

PLAN
WITH CJ

## CORNERS

NOTE:
UNLESS OTHERWISE INDICATED, THE CONTRACTOR HAS THE OPTION OF REINFORCING CORNERS IN ACCORDANCE WITH OPTION #1 OR OPTION #2.

## INTERSECTIONS

NOTE:
UNLESS OTHERWISE INDICATED, THE CONTRACTOR HAS THE OPTION OF CONSTRUCTING INTERSECTIONS WITH OR WITHOUT CONSTRUCTION JOINTS. REINFORCE PER APPLICABLE DETAIL.

# HORIZONTAL WALL REINFORCEMENT DETAILS

Offutt
Air Force Base

APPROVED

| SIGNATURE | OFFICE |
|---|---|

COORDINATION

"SIGNING OF THE COVER SHEET CONSTITUTES COORDINATION OF ALL DRAWINGS IN THIS PROJECT; SUBSEQUENT SHEETS NEED NOT BE SIGNED."

DESIGN FIRM

ARCHITECT
ALLEY POYNER MACCHIETTO ARCHITECTURE, P.C.

MECHANICAL / ELECTRICAL
MORRISSEY ENGINEERING

STRUCTURAL
PERFORMANCE ENGINEERING

CIVIL ENGINEERING
KIRKHAM MICHAEL

| Designer | Project Manager |
|---|---|
| JRS | ATM |
| Drafter | Date |
| JRS | 30-MAY-2008 |

| REVISION | BY/DATE |
|---|---|

SHEET TITLE
S3.0
GENERAL STRUCTURAL NOTES AND REINFORCING DETAILS

SHEET 19 OF 32

PROJECT TITLE
CONSTRUCT VETERINARY CLINIC, B595

Project Number
SGBP-07-0019

| Drawing Number | Facility Number |
|---|---|
| OFF-B-6052 | 595 |

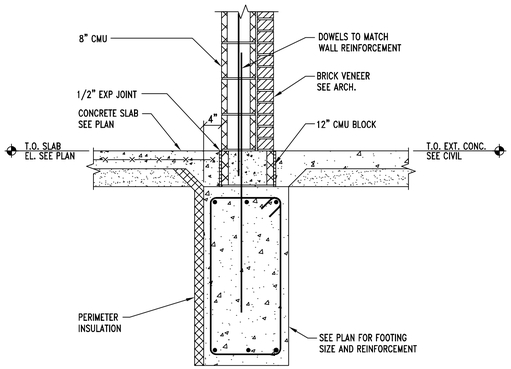


## 1 FOOTING SECTION

S3.1 SCALE: 3/4" = 1'-0"

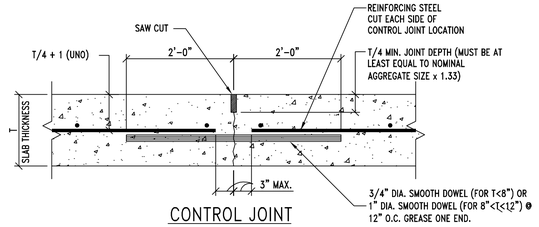


CONTROL JOINT

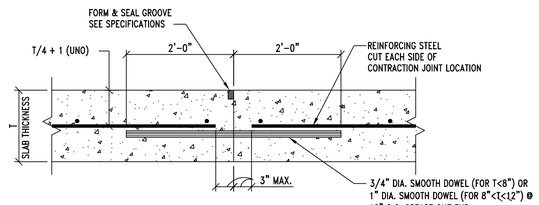


CONSTRUCTION JOINT

## 2 (C.J.) DETAIL

S3.1 SCALE: N.T.S.

SAW CUT: 1/4" WIDE SAW CUT W/ EPOXY JOINT FILLER.

NOTES:
1. SAW JOINT AS SOON AS SURFACE IS FIRM ENOUGH NOT TO BE TORN OR DAMAGED BY THE BLADE (USUALLY 4 TO 12 HOURS AFTER CONCRETE HARDENS).

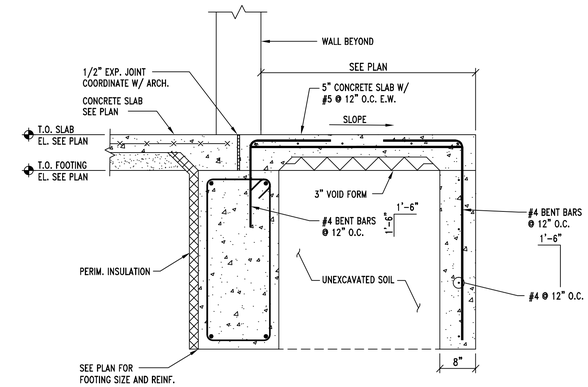


## 3 STOOP SECTION

S3.1 SCALE: 3/4" = 1'-0"

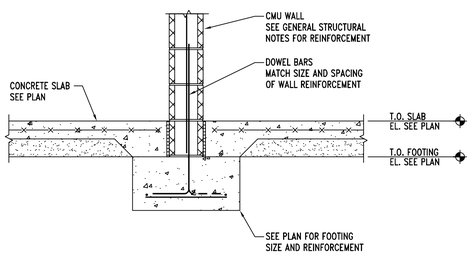


## 4 INTERIOR FOOTING SECTION

S3.1 SCALE: 3/4" = 1'-0"

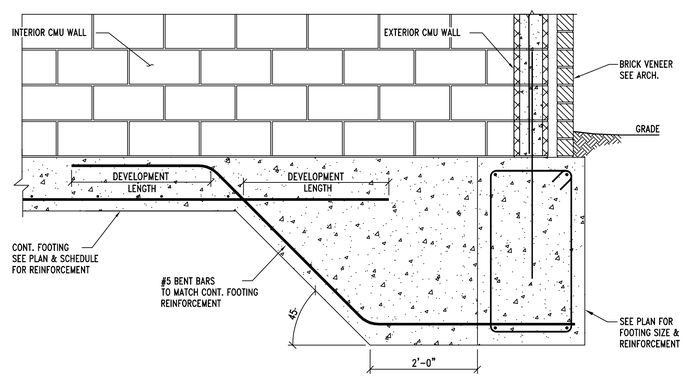


## 5 INT. TO EXT. FOOTING TRANSTION DETAIL

S3.1 SCALE: 3/4" = 1'-0"

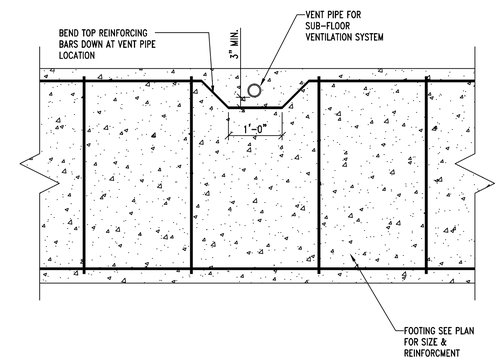


## 6 VENT PIPE THROUGH FTG. DETAIL

S3.1 SCALE: 3/4" = 1'-0"

Offutt
Air Force Base

APPROVED

| SIGNATURE | OFFICE |
|---|---|

COORDINATION

"SIGNING OF THE COVER SHEET CONSTITUTES COORDINATION OF ALL DRAWINGS IN THIS PROJECT; SUBSEQUENT SHEETS NEED NOT BE SIGNED."

DESIGN FIRM

ARCHITECT
ALLEY POYNER MACCHIETTO ARCHITECTURE, P.C.

MECHANICAL / ELECTRICAL
MORRISSEY ENGINEERING

STRUCTURAL
PERFORMANCE ENGINEERING

CIVIL ENGINEERING
KIRKHAM MICHAEL

| Designer | Project Manager |
|---|---|
| JRS | ATM |
| Drafter | Date |
| JRS | 30-MAY-2008 |

| REVISION | BY/DATE |
|---|---|

SHEET TITLE
S3.1
FOUNDATION DETAILS

| SHEET | OF |
|---|---|
| 20 | 32 |

PROJECT TITLE
CONSTRUCT VETERINARY CLINIC, B595

Project Number
SGBP-07-0019

| Drawing Number | Facility Number |
|---|---|
| OFF-B-6052 | 595 |

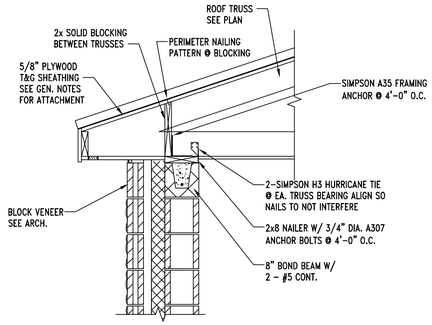


1 S3.2 SECTION
SCALE: 3/4" = 1'-0"

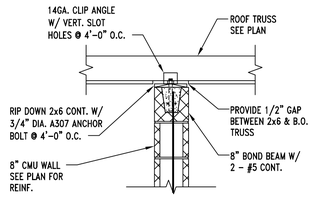


2 S3.2 SECTION
SCALE: 3/4" = 1'-0"

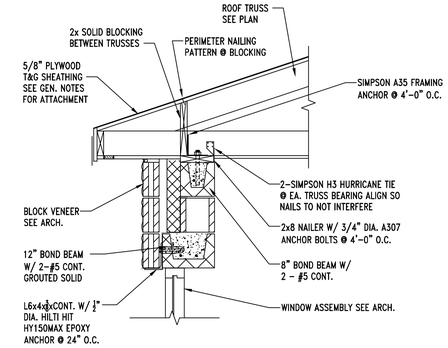


3 S3.2 LINTEL SECTION
SCALE: 3/4" = 1'-0"

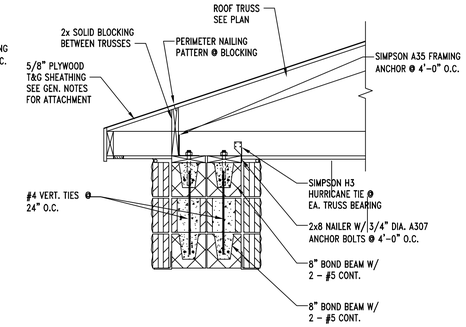


4 S3.2 LINTEL SECTION
SCALE: 3/4" = 1'-0"

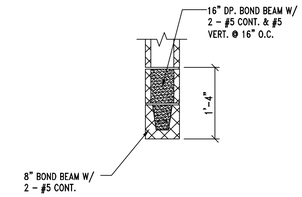


5 S3.2 LINTEL SECTION
SCALE: 3/4" = 1'-0"

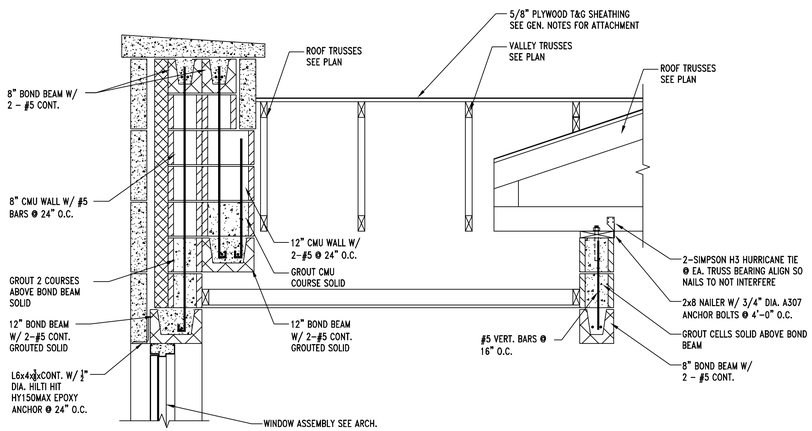


6 S3.2 SECTION
SCALE: 3/4" = 1'-0"

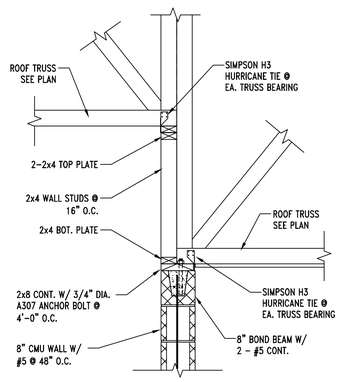


7 S3.2 SECTION
SCALE: 3/4" = 1'-0"

SHEET NOTES:
1. WOOD CONNECTORS SHALL BE AS SPECIFIED ON DETAILS OR APPROVED EQUAL.

Offutt
Air Force Base

APPROVED

| SIGNATURE | OFFICE |
|---|---|
| | |

COORDINATION

"SIGNING OF THE COVER SHEET CONSTITUTES COORDINATION OF ALL DRAWINGS IN THIS PROJECT; SUBSEQUENT SHEETS NEED NOT BE SIGNED."

DESIGN FIRM

ARCHITECT
ALLEY POYNER MACCHIETTO ARCHITECTURE, P.C.

MECHANICAL / ELECTRICAL
MORRISSEY ENGINEERING

STRUCTURAL
PERFORMANCE ENGINEERING

CIVIL ENGINEERING
KIRKHAM MICHAEL

| Designer | Project Manager |
|---|---|
| JRS | ATM |
| Drafter | Date |
| JRS | 30-MAY-2008 |

| REVISION | BY/DATE |
|---|---|
| | |

SHEET TITLE
S3.2
FRAMING DETAILS

SHEET 21 OF 32

PROJECT TITLE
CONSTRUCT VETERINARY CLINIC, B595

Project Number
SGBP-07-0019

| Drawing Number | Facility Number |
|---|---|
| OFF-B-6052 | 595 |

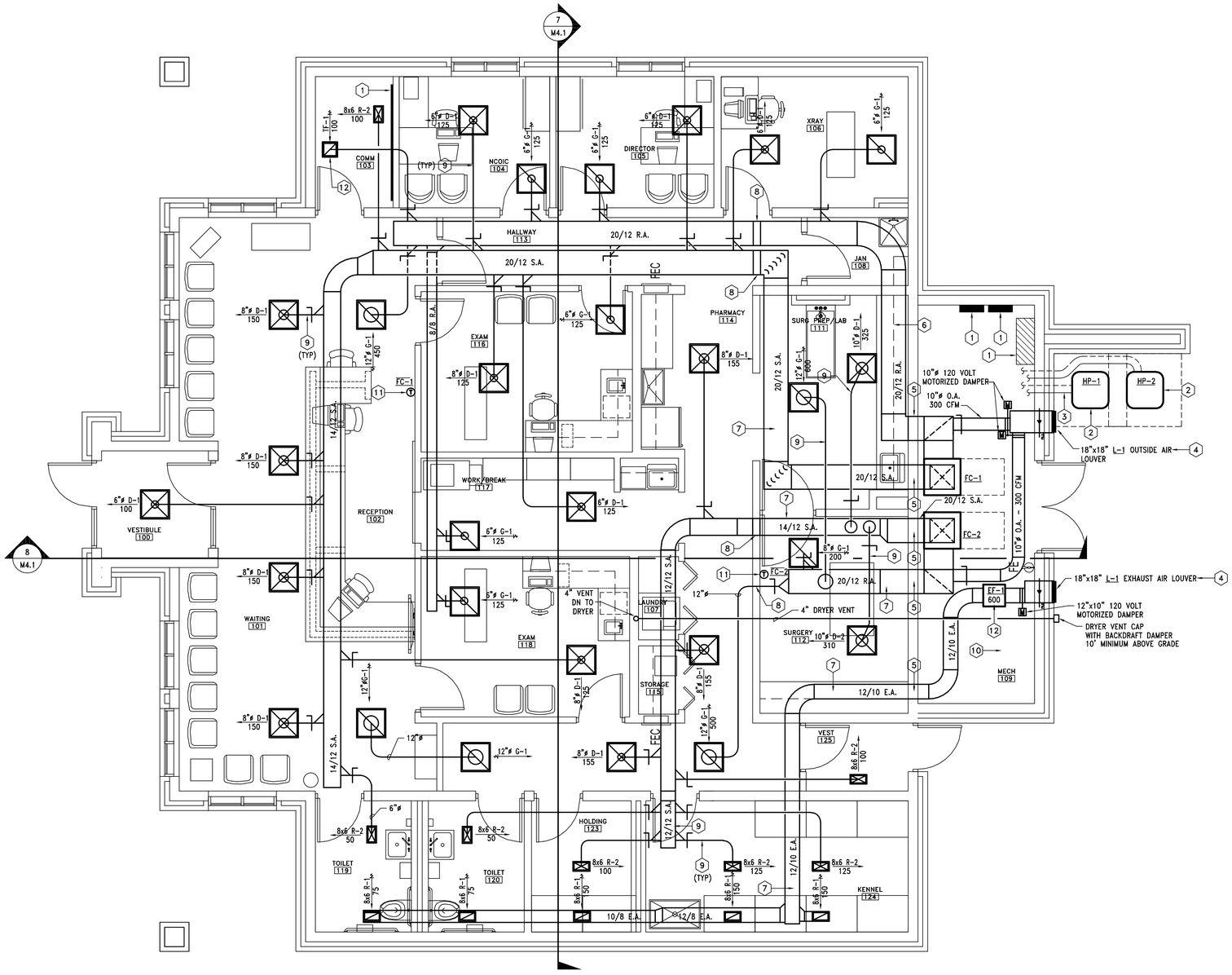


## 1 FLOOR PLAN – HVAC

M1.1 SCALE:1/4"=1'-0"

## GENERAL NOTES

1. DO NOT ROUTE ABOVE ELECTRICAL PANELS. MAINTAIN ALL CODE REQUIRED CLEARANCES.
2. UNLESS OTHERWISE NOTED, ALL RUN-OUTS TO DIFFUSERS AND GRILLES SHALL MATCH NECK SIZE. SEE DETAIL 5 ON SHEET M4.1
3. AN EMERGENCY SHUTOFF SWITCH SHALL BE PROVIDED IN THE HVAC CONTROL SYSTEM THAT CAN IMMEDIATELY SHUT DOWN THE AIR DISTRIBUTION SYSTEM THROUGHOUT THE BUILDING. EMERGENCY SHUTOFF SWITCH BY ELECTRICAL. SEE ELECTRICAL SHEETS FOR EMERGENCY SHUTOFF LOCATION.
4. SPACE ABOVE CEILINGS MAY BE LIMITED. CONTRACTOR SHALL COORDINATE ALL DUCT AND PIPING ROUTING WITH ALL OTHER TRADES. CONTRACTOR SHALL PROVIDE ALL ADDITIONAL OFFSETS AND TRANSITIONS AS REQUIRED TO COMPLETE INSTALLATION.

## FLAG NOTES

1. DO NOT ROUTE DUCTWORK ABOVE ELECTRICAL PANELS. MAINTAIN ALL CODE REQUIRED CLEARANCES.
2. SET HEAT PUMP ON CONCRETE PAD. MAINTAIN MANUFACTURER'S RECOMMENDED CLEARANCES. REFER TO ARCHITECTURAL PLANS FOR PAD LOCATIONS.
3. ROUTE REFRIGERANT PIPING FROM HEAT PUMP UNITS TO ASSOCIATED COIL AT FAN COIL UNIT. SUPPORT PIPING ABOVE GRADE. PENETRATE WALL AT 12" ABOVE GRADE. SEAL ALL PENETRATIONS INTO BUILDING WEATHER TIGHT. COORDINATE ROUTING OF PIPING IN MECHANICAL ROOM WITH ALL OTHER TRADES. SIZE PIPING PER MANUFACTURER'S RECOMMENDATIONS. PROVIDE ALL REFRIGERANT SPECIALTIES AS RECOMMENDED BY THE MANUFACTURER. ROUTE PIPING TO CREATE AS SHORT OF LINE LENGTH AS POSSIBLE. REFER TO SPECIFICATION FOR REFRIGERANT PIPING REQUIREMENTS.
4. LOCATE LOUVER 10 FEET MINIMUM ABOVE GRADE PER UFC 4-010-01. REFER TO UFC 4-010-01, SECTION 8-4.1.1 FOR MORE DETAILED INSTRUCTION AND REQUIREMENTS. PROVIDE LOUVER PLENUM AND MOTORIZED DAMPER. SEE DETAIL 6 / SHEET M4.1.
5. ROUTE DUCT THRU WALL TIGHT TO BOTTOM OF BOND BEAM.
6. ROUTE DUCT IN SOFFIT. COORDINATE SOFFIT CONSTRUCTION WITH GENERAL CONTRACTOR.
7. ROUTE DUCT ABOVE CEILING. CEILING SPACE IS EXTREMELY LIMITED. DUCT MAY NOT CROSS LIGHTS. COORDINATE EXACT LOCATION WITH ALL TRADES.
8. ROUTE DUCT THOUGH MASONRY WALL. TRANSITION UP TO HIGHER CEILING SPACE.
9. ROUTE DUCT IN ATTIC. SEE SHEET M4.1 FOR MECHANICAL SECTION DRAWINGS. SEE SPECIFICATIONS FOR ADDITIONAL INSULATION.
10. ELECTRIC HEAT BY ELECTRICAL CONTRACTOR. SEE ELECTRICAL DRAWINGS.
11. VERIFY EXACT LOCATION OF THERMOSTAT WITH BUILDING COMPONENTS. CONDUIT ROUGH-IN BY ELECTRICAL CONTRACTOR. CONTROL WIRING BY MECHANICAL CONTRACTOR.
12. SUPPORT FAN FROM STRUCTURE WITH VIBRATION ISOLATING HANGERS. PROVIDE BRACING IN ACCORDANCE WITH UFC 4-010-01 SECTIONS B3.6 & B4.5. CONNECT INLET AND DISCHARGE WITH FLEXIBLE DUCT CONNECTIONS.

## TEMPERATURE CONTROL NOTES

1. FAN COIL UNITS SHALL BE CONTROLLED BY STAND-ALONE PROGRAMMABLE THERMOSTATS. THERMOSTATS SHALL BE PROGRAMMED FOR OCCUPIED AND UNOCCUPIED MODE. DURING OCCUPIED MODE, THE FAN SHALL RUN CONTINUOUS (FAN 'ON'). DURING UNOCCUPIED MODE, THE FAN SHALL CYCLE TO MAINTAIN SPACE TEMPERATURE (FAN 'AUTO').

Offutt Air Force Base

| APPROVED | |
|---|---|
| SIGNATURE | OFFICE |
| COORDINATION | |

"SIGNING OF THE COVER SHEET CONSTITUTES COORDINATION OF ALL DRAWINGS IN THIS PROJECT; SUBSEQUENT SHEETS NEED NOT BE SIGNED."

DESIGN FIRM

ARCHITECT
ALLEY POYNER MACCHIETTO ARCHITECTURE, P.C.

MECHANICAL / ELECTRICAL
MORRISSEY ENGINEERING

STRUCTURAL
PERFORMANCE ENGINEERING

CIVIL ENGINEERING
KIRKHAM MICHAEL

The attached electronic document(s) is an instrument of service prepared by Alley Poyner Architecture and is being provided as requested by Offutt Air Force Base. The paper format of these drawings bear the seal(s) of the Registered Professional Architects and Engineers of Record. Due to the easily alterable nature of electronic documents, through either intentional or unintentional means, Alley Poyner Architecture does not make any express or implied warranty for the accuracy or completeness of this information. Hard copies (i.e., prints, paper copies, etc.) shall prevail in any dispute over accuracy or sufficiency of electronic documents.

| Designer | Project Manager |
|---|---|
| NJL | ATM |
| Drafter | Date |
| BJK | 30-MAY-2008 |

| REVISION | BY/DATE |
|---|---|

SHEET TITLE
M1.1
FLOOR PLAN
HVAC

| SHEET | OF |
|---|---|
| 22 | 32 |

PROJECT TITLE
CONSTRUCT VETERINARY CLINIC, B595

Project Number
SGBP-07-0019

| Drawing Number | Facility Number |
|---|---|
| OFF-B-6052 | 595 |

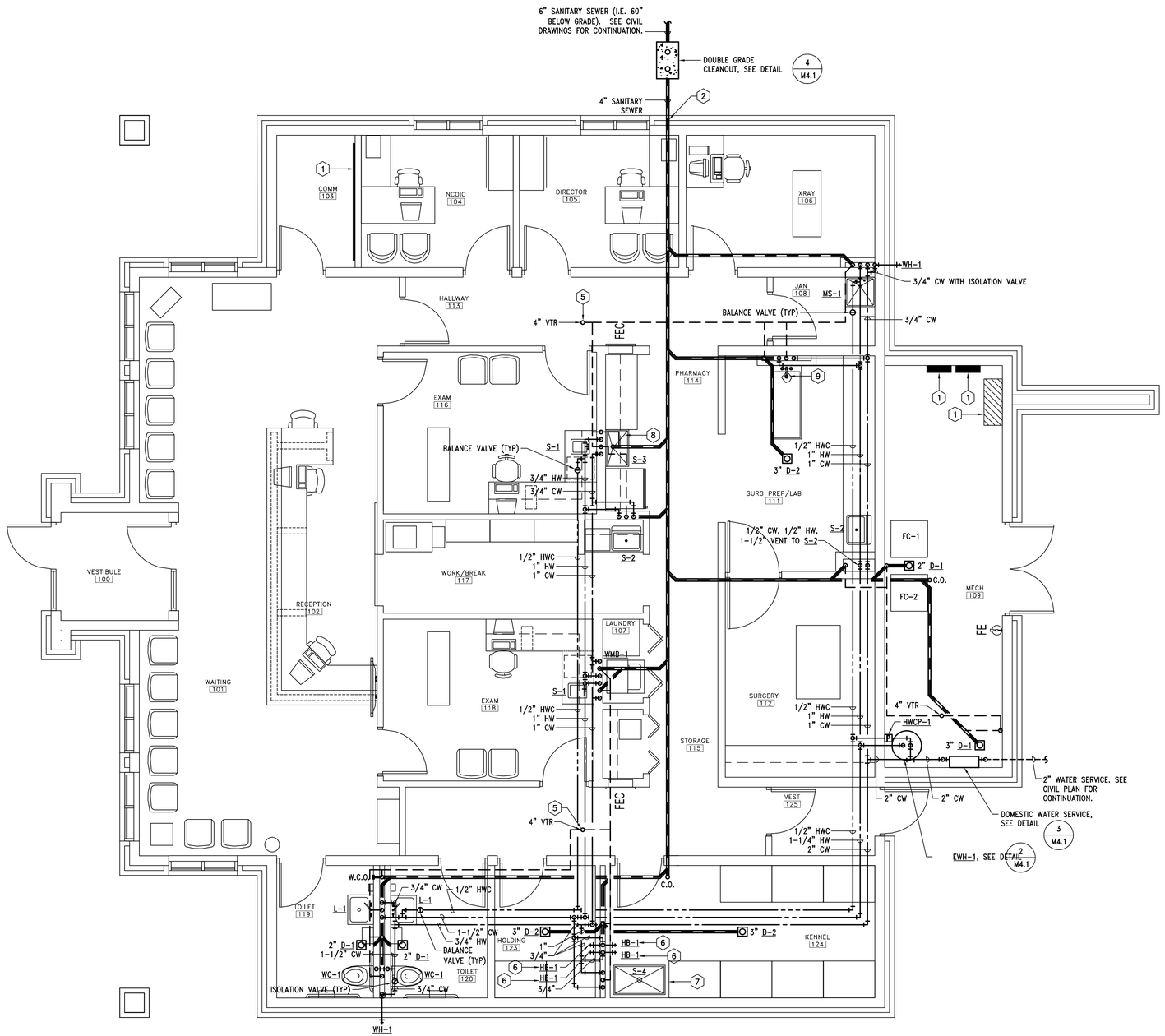


## 1 FLOOR PLAN – PLUMBING

M2.1 SCALE:1/4"=1'-0"

### GENERAL NOTES

1. DO NOT ROUTE PIPE ABOVE ELECTRICAL PANELS. MAINTAIN ALL CODE REQUIRED CLEARANCES.
2. COORDINATE LOCATION OF ALL UNDERGROUND PIPING WITH FOOTINGS. SLEEVE AS REQUIRED.
3. INSTALL ALL MAIN ISOLATION AND BALANCE VALVES ABOVE ACCESSIBLE CEILINGS.
4. PIPING SHOWN FOR CLARITY. ROUTE ALL PIPING ABOVE CEILINGS, IN CHASE, AND IN WALLS AS REQUIRED. DO NOT ROUTE PIPING IN ATTIC SPACE.
5. SPACE ABOVE CEILINGS MAY BE LIMITED. CONTRACTOR SHALL COORDINATE ALL DUCT AND PIPING ROUTING WITH ALL OTHER TRADES. CONTRACTOR SHALL PROVIDE ALL ADDITIONAL OFFSETS AND TRANSITIONS AS REQUIRED TO COMPLETE INSTALLATION.
6. SEE PLUMBING FIXTURE SCHEDULE ON SHEET M5.1 FOR CONNECTION SIZES.
7. SEE WASTE AND VENT RISER DIAGRAM ON SHEET M3.1 FOR WASTE AND VENT SIZES.

### FLAG NOTES

1. DO NOT ROUTE DUCTWORK ABOVE ELECTRICAL PANELS. MAINTAIN ALL CODE REQUIRED CLEARANCES.
2. COORDINATE EXITING SANITARY SEWER WITH FOOTINGS AND FOUNDATION. SLEEVE FOOTING FOR SANITARY SEWER AS REQUIRED.
3. (NOT USED)
4. (NOT USED)
5. LOCATE 4" VTR SYMMETRICAL WITH ROOF AND OTHER VTR.
6. 3/4" CW OR HW TO HOSE BIBB. MOUNT HOSE BIBB AT 44" ABOVE FINISHED FLOOR.
7. ANIMAL WASH TUB CONTRACTOR FURNISHED AND INSTALLED. PROVIDE 1/2" CW, 1/2" HW, 1-1/4" W AND 1-1/2" V TO TUB. PROVIDE HAIR TRAP AT SINK DISCHARGE. COORDINATE CONNECTION REQUIREMENTS WITH THE EQUIPMENT MANUFACTURER.
8. SURGICAL SCRUB SINK CONTRACTOR FURNISHED AND INSTALLED. PROVIDE 1/2" CW, 1/2" HW, 1-1/4" W AND 1-1/2" V TO TUB. COORDINATE CONNECTION REQUIREMENTS WITH THE EQUIPMENT MANUFACTURER.
9. WET PREP TABLE GOVERNMENT FURNISHED, AND CONTRACTOR INSTALLED. PROVIDE 3/4" CW, 3/4" HW, 2" W AND 1-1/2" V TO TUB. COORDINATE CONNECTION REQUIREMENTS WITH THE EQUIPMENT MANUFACTURER.
10. (NOT USED)

Offutt
Air Force Base

APPROVED

| SIGNATURE | OFFICE |
|---|---|

COORDINATION

"SIGNING OF THE COVER SHEET CONSTITUTES COORDINATION OF ALL DRAWINGS IN THIS PROJECT; SUBSEQUENT SHEETS NEED NOT BE SIGNED."

DESIGN FIRM

ARCHITECT
ALLEY POYNER MACCHIETTO ARCHITECTURE, P.C.

MECHANICAL / ELECTRICAL
MORRISSEY ENGINEERING

STRUCTURAL
PERFORMANCE ENGINEERING

CIVIL ENGINEERING
KIRKHAM MICHAEL

The attached electronic document(s) is an instrument of service prepared by Alley Poyner Architecture and is being provided as requested by Offutt Air Force Base. The paper format of these drawings bear the seal(s) of the Registered Professional Architects and Engineers of Record. Due to the easily alterable nature of electronic documents, through either intentional or unintentional means, Alley Poyner Architecture does not make any express or implied warranty for the accuracy or completeness of this information. Hard copies (i.e., prints, paper copies, etc.) shall prevail in any dispute over accuracy or sufficiency of electronic documents.

| Designer | Project Manager |
|---|---|
| NJL | ATM |
| Drafter | Date |
| BJK | 30-MAY-2008 |

| REVISION | BY/DATE |
|---|---|

SHEET TITLE
M2.1
FLOOR PLAN
PLUMBING

SHEET 23 OF 32

PROJECT TITLE
CONSTRUCT VETERINARY CLINIC, B595

Project Number
SGBP-07-0019

| Drawing Number | Facility Number |
|---|---|
| OFF-B-6052 | 595 |

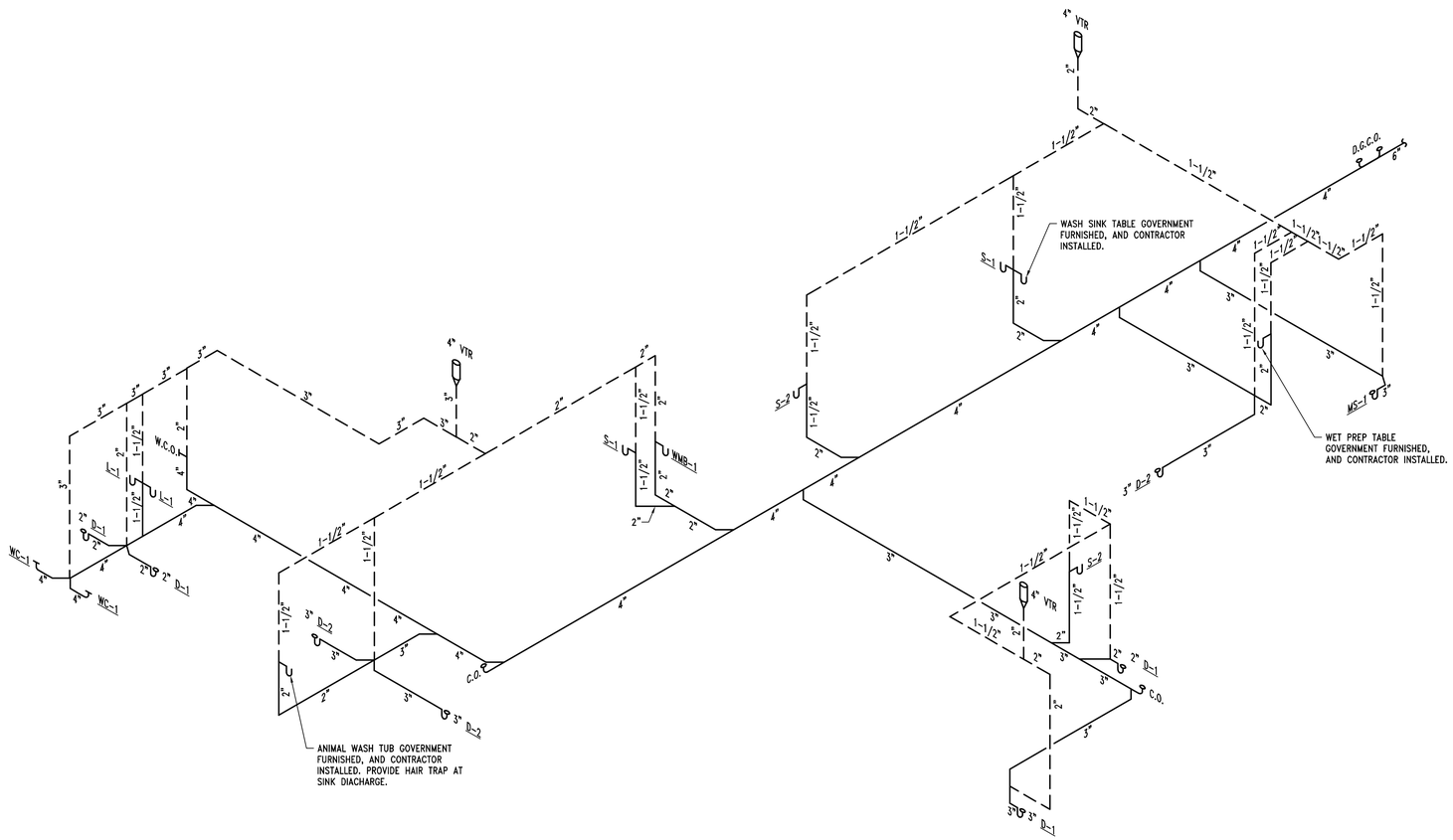


1 **WASTE & VENT RISER**

M3.1 SCALE:NO SCALE

# MECHANICAL SYMBOLS

| SYMBOL | DESCRIPTION | SYMBOL | DESCRIPTION |
|---|---|---|---|
| **TYPICAL PIPING** | | | |
| | PIPE TEE / PIPE ELBOW | | UNION |
| | ELBOW DN / ELBOW UP | | STRAINER WITH BLOWDOWN |
| | ISOLATION VALVE (BALL OR BUTTERFLY) | | CHECK VALVE (ARROW INDICATES FLOW) |
| | BALANCING VALVE | | AUTOMATIC CONTROL VALVE TWO-WAY / THREE WAY |
| | GATE VALVE | | PRESSURE REGULATING VALVE (PRV) |
| | GLOBE VALVE | | PRESSURE GAUGE |
| P.T.T. | PRESSURE/TEMPERATURE TEST PORT | | THERMOMETER |
| **PLUMBING** | | | |
| | DOMESTIC COLD WATER (CW) | | GAS COCK |
| | DOMESTIC HOT WATER (HW) (NUMBER INDICATES TEMPERATURE) | 2" D-1 | FLOOR DRAIN - SIZE TYPE |
| | DOMESTIC HOT WATER CIRCULATION (HWC) (NUMBER INDICATES TEMPERATURE) | 2" RD-1 | ROOF DRAIN - SIZE TYPE |
| | SANITARY WASTE (BELOW GRADE) | 2" OFD-1 | OVERFLOW ROOF DRAIN - SIZE TYPE |
| | SANITARY WASTE (ABOVE GRADE) | HB | HOSE BIBB |
| | VENT PIPING | WH | WALL HYDRANT (NON-FREEZE) |
| ST | STORM PIPING (BELOW GRADE) | VTR | VENT THROUGH ROOF |
| ST | STORM PIPING (ABOVE GRADE) | I.E. | I.E. INVERT ELEVATION |
| OF | OVERFLOW STORM PIPING (BELOW GRADE) | F.L. | FLOW LINE |
| OF | OVERFLOW STORM PIPING (ABOVE GRADE) | WC | WATER CLOSET (SEE SPECIFICATIONS FOR TYPE) |
| AW | ACID WASTE PIPING (BELOW GRADE) | UR | URINAL (SEE SPECIFICATIONS FOR TYPE) |
| AW | ACID WASTE PIPING (ABOVE GRADE) | LAV | LAVATORY (SEE SPECIFICATIONS FOR TYPE) |
| AV | ACID VENT PIPING | S | SINK (SEE SPECIFICATIONS FOR TYPE) |
| A | COMPRESSED AIR PIPING | EWC | ELECTRIC WATER COOLER (SEE SPECIFICATIONS FOR TYPE) |
| G | NATURAL GAS PIPING | MS | MOP SINK (SEE SPECIFICATIONS FOR TYPE) |
| SAN | SITE SANITARY PIPING | DI | DUCTILE IRON |
| ST | SITE STORM PIPING | CI | CAST IRON |
| W | SITE WATER PIPING | PVC | POLY VINYL CHLORIDE |
| **HVAC** | | | |
| 6x6 R-1 / 100 | SIDEWALL SUPPLY REGISTER OR GRILLE NECKSIZE (IN), TAG / AIRFLOW (CFM) | S | SENSOR |
| | | T | THERMOSTAT |
| 6x6 R-1 / 100 | SIDEWALL RETURN OR EXHAUST REGISTER OR GRILLE NECKSIZE (IN), TAG / AIRFLOW (CFM) | H | HUMIDISTAT |
| | | M | MOTORIZED CONTROL DAMPER WITH ACTUATOR |
| 6"ø D-1 / 100 | SUPPLY AIR REGISTER NECKSIZE (IN), TAG / AIRFLOW (CFM) | B.D.D. | BACKDRAFT DAMPER |
| | | V.D. | VOLUME DAMPER |
| | SUPPLY AIR, OUTSIDE AIR OR MIXED AIR DUCT END OR RISER UP / RISER DN | F.R.D. | FIRE DAMPER WITH SLEEVE AND ACCESS DOOR |
| | | M S.D. | SMOKE DAMPER WITH SLEEVE AND ACCESS DOOR |
| | RETURN AIR, EXHAUST AIR OR RELIEF AIR DUCT END OR RISER UP / RISER DN | M F.S.D. | FIRE/SMOKE DAMPER WITH SLEEVE AND ACCESS DOOR |
| | | S.A. | SUPPLY AIR |
| 12/8 | RECTANGULAR DUCTWORK (WIDTH/DEPTH)(IN) (FIRST NUMBER IS SIDE SHOWN) | R.A. | RETURN AIR |
| | | E.A. | EXHAUST AIR |
| 12"ø | ROUND DUCTWORK (DIAMETER)(IN) (SPIRAL DUCT IN EXPOSED AREAS) | RLF.A. | RELIEF AIR |
| | | O.A. | OUTSIDE AIR |
| | TURNING VANES | M.A. | MIXED AIR |

AIR COMBAT COMMAND

**Offutt**
Air Force Base

APPROVED

| SIGNATURE | OFFICE |
|---|---|
| | |

COORDINATION

"SIGNING OF THE COVER SHEET CONSTITUTES COORDINATION OF ALL DRAWINGS IN THIS PROJECT; SUBSEQUENT SHEETS NEED NOT BE SIGNED."

DESIGN FIRM

ARCHITECT
ALLEY POYNER MACCHIETTO ARCHITECTURE, P.C.

MECHANICAL / ELECTRICAL
MORRISSEY ENGINEERING

STRUCTURAL
PERFORMANCE ENGINEERING

CIVIL ENGINEERING
KIRKHAM MICHAEL

The attached electronic document(s) is an instrument of service prepared by Alley Poyner Architecture and is being provided as requested by Offutt Air Force Base. The paper format of these drawings bear the seal(s) of the Registered Professional Architects and Engineers of Record. Due to the easily alterable nature of electronic documents, through either intentional or unintentional means, Alley Poyner Architecture does not make any express or implied warranty for the accuracy or completeness of this information. Hard copies (i.e., prints, paper copies, etc.) shall prevail in any dispute over accuracy or sufficiency of electronic documents.

| Designer | Project Manager |
|---|---|
| NJL | ATM |
| **Drafter** | **Date** |
| BJK | 30-MAY-2008 |

| REVISION | BY/DATE |
|---|---|
| | |

SHEET TITLE
M3.1
WASTE & VENT RISER

SHEET 24 OF 32

PROJECT TITLE
CONSTRUCT VETERINARY CLINIC, B595

Project Number
SGBP-07-0019

| Drawing Number | Facility Number |
|---|---|
| OFF-B-6052 | 595 |

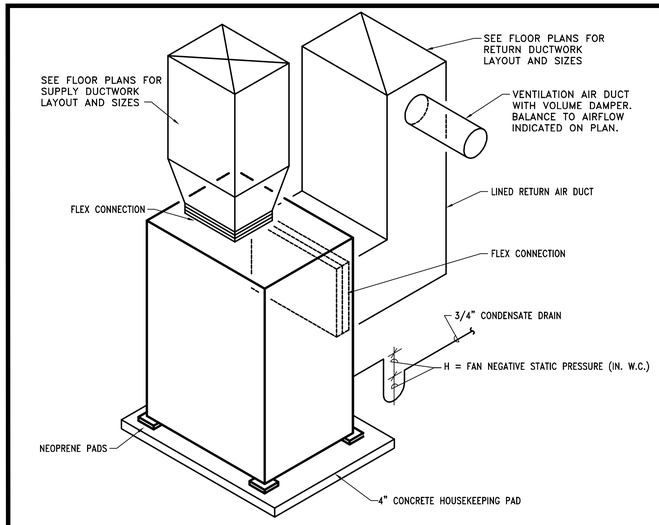


NOTES

1. MAINTAIN MANUFACTURER'S RECOMMENDED CLEARANCES AROUND UNIT.

## 1 VERTICAL FAN COIL DETAIL

M4.1 SCALE:NO SCALE

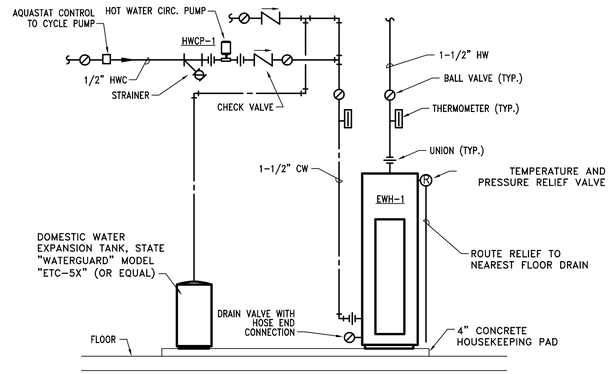


## 2 ELECTRIC WATER HEATER DETAIL

M4.1 SCALE:NO SCALE

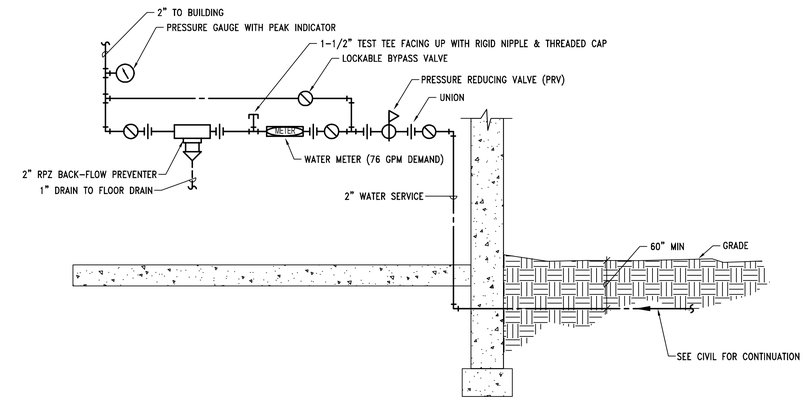


## 3 WATER SERVICE ENTRY

M4.1 SCALE:NO SCALE

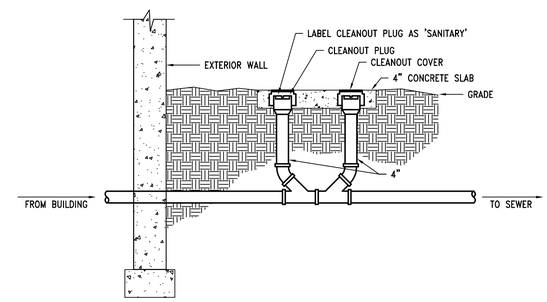


## 4 DOUBLE GRADE CLEANOUT

M4.1 SCALE:NO SCALE

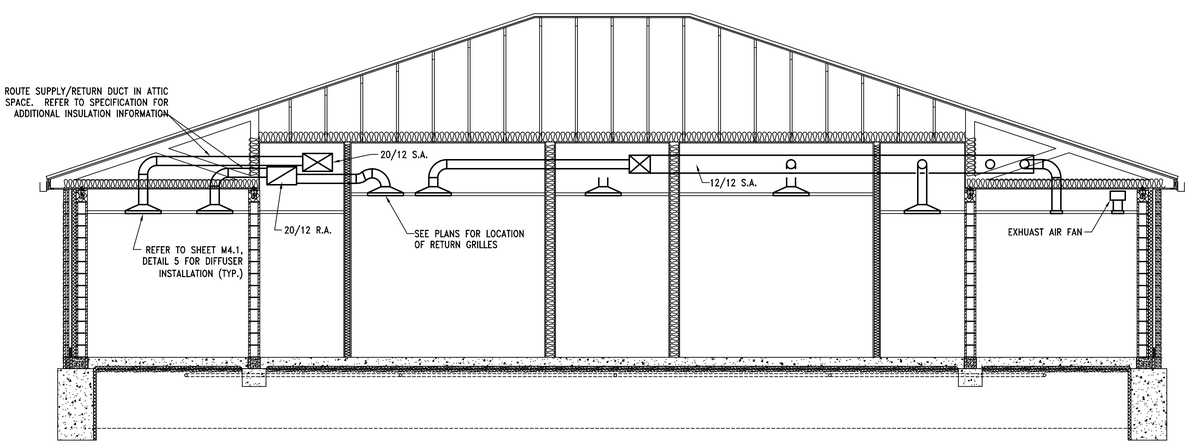


## 7 MECHANICAL SECTION – LOOKING EAST

M4.1 SCALE:1/4"=1'-0"

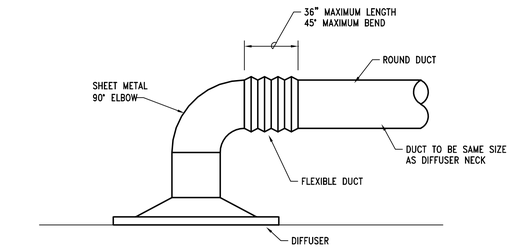


## 5 DIFFUSER CONNECTION DETAIL

M4.1 SCALE:NO SCALE

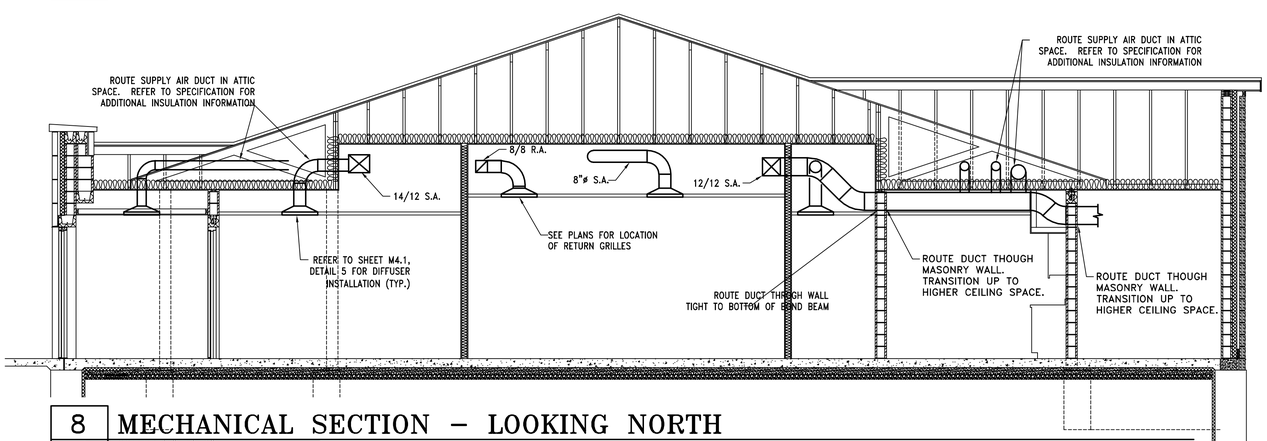


## 8 MECHANICAL SECTION – LOOKING NORTH

M4.1 SCALE:1/4"=1'-0"

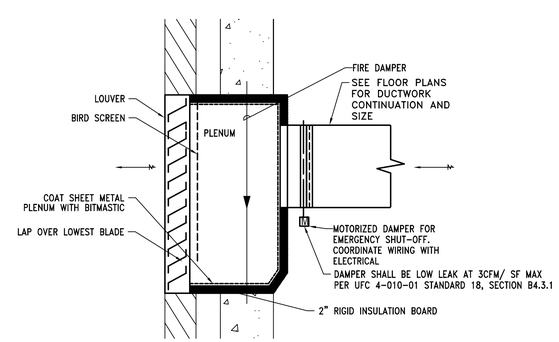


## 6 LOUVER DETAIL

M4.1 SCALE:NO SCALE

Offutt
Air Force Base

APPROVED

| SIGNATURE | OFFICE |
|---|---|

COORDINATION

"SIGNING OF THE COVER SHEET CONSTITUTES COORDINATION OF ALL DRAWINGS IN THIS PROJECT; SUBSEQUENT SHEETS NEED NOT BE SIGNED."

DESIGN FIRM

ARCHITECT
ALLEY POYNER MACCHIETTO ARCHITECTURE, P.C.

MECHANICAL / ELECTRICAL
MORRISSEY ENGINEERING

STRUCTURAL
PERFORMANCE ENGINEERING

CIVIL ENGINEERING
KIRKHAM MICHAEL

The attached electronic document(s) is an instrument of service prepared by Alley Poyner Architecture and is being provided as requested by Offutt Air Force Base. The paper format of these drawings bear the seal(s) of the Registered Professional Architects and Engineers of Record. Due to the easily alterable nature of electronic documents, through either intentional or unintentional means, Alley Poyner Architecture does not make any express or implied warranty for the accuracy or completeness of this information. Hard copies (i.e., prints, paper copies, etc.) shall prevail in any dispute over accuracy or sufficiency of electronic documents.

| Designer | Project Manager |
|---|---|
| NJL | ATM |
| Drafter | Date |
| BJK | 30-MAY-2008 |

| REVISION | BY/DATE |
|---|---|

SHEET TITLE
M4.1
MECHANICAL SECTIONS & DETAILS

| SHEET | OF |
|---|---|
| 25 | 32 |

PROJECT TITLE
CONSTRUCT VETERINARY CLINIC, B595

| Project Number | |
|---|---|
| SGBP-07-0019 | |
| Drawing Number | Facility Number |
| OFF-B-6052 | 595 |

## FAN COIL UNIT SCHEDULE

| | | | |
|---|---|---|---|
| GENERAL | PLAN TAG | FC-1 | FC-2 |
| | MANUFACTURER (8) | CARRIER | CARRIER |
| | MODEL NUMBER | FV4B-006 | FV4B-006 |
| | SERVES | OFFICE/WAITING | SURGERY |
| | CONFIGURATION | VERTICAL | VERTICAL |
| | MAXIMUM SIZE (LxW)(IN) | 20"x25"x60" | 20"x25"x60" |
| | MAXIMUM WEIGHT | 210 | 210 |
| | OUTSIDE AIRFLOW (CFM) | 300 | 300 |
| | REMARKS | (1, 3, 4, 6) | (1, 3, 4, 6) |
| FAN | AIRFLOW (CFM) | 1600 | 1600 |
| | EXTERNAL STATIC PRESSURE (IN. W.C.) | 0.8 | 0.8 |
| | MAXIMUM FAN BHP | – | – |
| MOTOR | RPM | 1750 | 1750 |
| | HP | 3/4 | 3/4 |
| | VOLTS | 208 | 208 |
| | PHASE | 1 | 1 |
| | TYPE | ECM | ECM |
| | CONTROL DEVICE | (4) | (4) |
| | REMARKS | (7) | (7) |
| HEATING | ENTERING AIR TEMP (°F) | 70 | 70 |
| | LEAVING AIR TEMP (°F) | 96 | 96 |
| | TOTAL CAPACITY (MBH) | 61.4 | 61.4 |
| | REMARKS | (5) | (5) |
| COOLING | ENTERING DB (°F) | 80 | 80 |
| | ENTERING WB (°F) | 67 | 67 |
| | LEAVING DB (°F) | 56 | 56 |
| | LEAVING WB (°F) | – | – |
| | TOTAL CAPACITY (MBH) | 46.0 | 46.0 |
| | SENSIBLE CAPACITY (MBH) | 34.0 | 34.0 |
| | REMARKS | (2) | (2) |
| ELECTRIC | VOLTAGE/PHASE | 208/3 | 208/3 |
| | CAPACITY (KW) | 18 | 18 |
| | NUMBER OF STAGES | 3 | 3 |
| | KW PER STAGE | 6 | 6 |
| | REMARKS | (5, 7) | (5, 7) |
| DIRECT EXPANSION | REFRIGERANT TYPE | R-410A | R-410A |
| | SATURATED SUCTION TEMP (°F) | 45 | 45 |
| | REMARKS | – | – |

REMARKS

1. INTEGRATED SOLID STATE CONTROLS WITH BLOWER AND LIMIT CONTROLS.
2. CASED DX COOLING COIL TO MATCH FAN COIL UNIT AND CONDENSING UNIT
3. 2" PLEATED DISPOSABLE
4. 7-DAY PROGRAMMABLE SETBACK THERMOSTAT WITH HEAT/COOL/AUTO, FAN ON/OFF/AUTO CONTROL
5. CAPACITY (KW) INDICATED IS AT 208 VOLTS. CAPACITY IS DERATED FROM THE STANDARD CAPACITY REPORTED AT 230V.
6. MULTI POSITION FAN COIL CAPABLE OF INSTALLATION IN UPFLOW, DOWNFLOW OR HORIZONTAL CONFIGURATION. SEE FLOOR PLANS FOR CONFIGURATION.
7. SINGLE POINT ELECTRICAL CONNECTION, DISCONNECT BY ELECTRICAL CONTRACTOR.
8. OR EQUAL – SEE SPECIFICATIONS

## AIR-TO-AIR HEAT PUMP SCHEDULE

| | | | |
|---|---|---|---|
| GENERAL | PLAN TAG | HP-1 | HP-2 |
| | MANUFACTURER (2) | CARRIER | CARRIER |
| | MODEL NUMBER | 25HNA948 | 25HNA948 |
| | SERVES | OFFICE/WAITING | SURGERY |
| | CONFIGURATION | VERTICAL | VERTICAL |
| | MAXIMUM SIZE (LxW)(IN) | 40"x36" | 40"x36" |
| | MAXIMUM WEIGHT (LBS.) | 350 | 350 |
| | REMARKS | (1) | (1) |
| ELECTRICAL | VOLTS | 208 | 208 |
| | PHASE | 1 | 1 |
| | MAXIMUM UNIT KW | – | – |
| | MAXIMUM FUSE SIZE (AMPS) | 60 | 60 |
| | MINIMUM CIRCUIT AMPACITY (MCA) | 36.6 | 36.6 |
| | REMARKS | – | – |
| COOLING | AMBIENT AIR TEMPERATURE (°F) | 67 | 67 |
| | MINIMUM NET SEER (ARI) | 15 | 15 |
| | NOMINAL CAPACITY (TONS) | 4 | 4 |
| | TOTAL COOLING (MBH) | 46.0 | 46.0 |
| | SENSIBLE COOLING (MBH) | 34.0 | 34.0 |
| HEATING | AMBIENT AIR TEMPERATURE (°F) | – | – |
| | MINIMUM COP (ARI) | 2.6 | 2.6 |
| | MINIMUM HEATING CAPACITY (MBH) | 27.0 | 27.0 |
| REFRIGERANT | TYPE | R-410A | R-410A |
| | MIN. NUMBER OF CIRCUITS | 1 | 1 |
| | REMARKS | – | – |
| COMPRES-SORS | TYPE | SCROLL | SCROLL |
| | QUANITY/SIZE | 1 | 1 |
| | HP | – | – |
| | REMARKS | – | – |
| CONDENSER FANS | TYPE | DIRECT DRIVE | DIRECT DRIVE |
| | QUANITY/SIZE | 1 | 1 |
| | HP | 1/5 | 1/5 |
| | REMARKS | – | – |

REMARKS

1. PROVIDE LOW-AMBIENT CONTROLS FOR HEAT PUMP TO OPERATE DOWN TO 0°F AMBIENT TEMPERATURE.
2. OR EQUAL – SEE SPECIFICATIONS

## FAN SCHEDULE

| | | | |
|---|---|---|---|
| GENERAL | PLAN TAG | EF-1 | TF-1 |
| | MANUFACTURER (6) | GREENHECK | GREENHECK |
| | MODEL NUMBER | BSQ-80-5 | SP-B110 |
| | SERVES | EXHAUST | COMM |
| | TYPE | (1) | INLINE FAN |
| | MAXIMUM WEIGHT (LBS) | 100 | 15 |
| | ROOF/WALL OPENING SIZE | – | – |
| | ACCESSORIES | – | – |
| FAN | AIRFLOW (CFM) | 600 | 100 |
| | TOTAL SP (IN. W.C.) | 1.0 | 0.5 |
| | CLASS | – | – |
| | WHEEL TYPE | B.I. | – |
| | MINIMUM WHEEL DIA. | 9" | – |
| | MAXIMUM SONES | 19.6 | 1.5 |
| | MAXIMUM FAN RPM | 2645 | – |
| | MAXIMUM FAN BHP | 0.43 | – |
| MOTOR | RPM | 2164 | 950 |
| | HP | 1/2 | – |
| | VOLTS | 115 | 115 |
| | PHASE | 1 | 1 |
| | TYPE | O.D.P. | O.D.P. |
| | CONTROL DEVICE | (4) | (6) |
| | REMARKS | (2, 3) | – |

REMARKS

1. BELT-DRIVE IN-LINE CENTRIFUGAL FAN
2. PROVIDE MOTOR COVER, VERTICAL SUPPORT BRACKETS, SPRING ISOLATORS, INLET AND OUTLET FLANGES, FACTORY MOUNTED DISCONNECT.
3. ELECTRICAL DISCONNECT, VIBRATION ISOLATORS, BEARING GREASE FITTINGS
4. TIMECLOCK BY ELECTRICAL CONTRACTOR, SEE ELECTRICAL DRAWINGS
5. 120V, LINE VOLTAGE THERMOSTAT, SEE ELECTRICAL DRAWINGS
6. OR EQUAL – SEE SPECIFICATIONS

## WATER HEATER SCHEDULE

| | | | | |
|---|---|---|---|---|
| GENERAL | PLAN TAG | EWH-1 | | |
| | MANUFACTURER (4) | STATE | | |
| | MODEL NUMBER | ES6-80-DORT | | |
| | SERVES | COMMERCIAL | | |
| | RECOVERY (GPH@ 100°F RISE) | 21 | | |
| TANK | TYPE | (1) | | |
| | STORAGE CAPACITY (GAL.) | 80 | | |
| | DIMENSIONS (LxWxH)(IN.) | 24"#x60-1/2" | | |
| | REMARKS | (2) | | |
| ELECTRIC | VOLTAGE/PHASE | 208/1 | | |
| | CAPACITY (KW) | 6.0 | | |
| | NUMBER OF STAGES | (3) | | |
| | KW PER STAGE | 6.0 | | |
| | REMARKS | (3) | | |

REMARKS

1. INTEGRAL GLASS LINED STORAGE TANK
2. TEMPERATURE PRESSURE RELIEF VALVE
3. DUAL, NON-SIMULTANEOUS ELECTRIC ELEMENTS
4. OR EQUAL – SEE SPECIFICATIONS

## DIFFUSER REGISTER GRILLE AND LOUVER SCHEDULE

| PLAN TAG | D-1 | D-2 | R-1 | R-2 | G-1 | L-1 | | | |
|---|---|---|---|---|---|---|---|---|---|
| MANUFACTURER (7) | KRUEGER | KRUEGER | KRUEGER | KRUEGER | KRUEGER | RUSKIN | | | |
| MODEL NUMBER | PLQ | TADSSHF | S80H | 880H | 6690 | ELF375X | | | |
| FUNCTION | SUPPLY | SUPPLY | EXHAUST/RETURN | SUPPLY | RETURN | (3) | | | |
| DESCRIPTION | DIFFUSER | (5) | REGISTER | REGISTER | PERFORATED | LOUVER | | | |
| DEFLECTION | 4-WAY | 180# | FIXED, 0° | DOUBLE | – | FIXED | | | |
| MAXIMUM STATIC PRESSURE (IN W.G.) | 0.10 | 0.030 | 0.10 | 0.10 | 0.10 | 0.10 | | | |
| CONSTRUCTION MATERIAL | STEEL | STEEL | STEEL | STEEL | STEEL | ALUMINUM | | | |
| FINISH | WHITE | WHITE | WHITE | WHITE | WHITE | (4) | | | |
| NECK SIZE (IN) | SEE PLANS | SEE PLANS | SEE PLANS | SEE PLANS | SEE PLANS | – | | | |
| FACE SIZE (IN) | 24"x24" | 24x24 | SEE PLANS | SEE PLANS | 24" x 24" | SEE PLAN | | | |
| ACCESSORIES | O.B. DAMPER | O.B. DAMPER | O.B. DAMPER | O.B. DAMPER | – | – | | | |
| REMARKS | (1, 2) | (1, 2, 6) | (1, 2) | (1, 2) | (1, 2,) | – | | | |

REMARKS

1. VERIFY CEILING CONSTRUCTION PRIOR TO FURNISHING MATERIAL.
2. NOISE CRITERIA (NC) SHALL BE LESS THAN 25 ON DIFFUSERS, REGISTERS AND GRILLES IN LOCATED OCCUPIED SPACES
3. EXHAUST AND OUTSIDE AIR
4. COLOR SELECTED BY ARCHITECT
5. TOTAL AIR DIFFUSER WITH HEPA FILTER
6. PROVIDE AN AMERICAN AIR FILTERS ASTROCELL II LPD SERIES HEPA FILTER WITH CELL SIDE SERIES 85, OR EQUAL.
7. OR EQUAL – SEE SPECIFICATIONS

## PUMP SCHEDULE

| | | | | |
|---|---|---|---|---|
| GENERAL | PLAN TAG | HWCP-1 | | |
| | MANUFACTURER (6) | B&G | | |
| | MODEL NUMBER | NBF-8S/LW | | |
| | SERVES | HWC | | |
| | TYPE | IN-LINE | | |
| | ACCESSORIES | (1) | | |
| PUMP | FLOW (GPM) | 3 | | |
| | TOTAL HEAD (FEET) | 10 | | |
| | SHUT-OFF HEAD (FEET) | 14 | | |
| | NPSH AVAILABLE (FEET) | – | | |
| | MIN. EFFICIENCY | – | | |
| | FLUID | WATER | | |
| | SUCTION SIZE (IN) | 1" | | |
| | DISCHARGE SIZE (IN) | 1" | | |
| | MAX. IMPELLER DIA. (IN) | – | | |
| MOTOR | RPM | 2800 | | |
| | HP | 1/12 | | |
| | VOLTS | 115 | | |
| | PHASE | 1 | | |
| | TYPE | O.D.P. | | |
| | CONTROL DEVICE | (2) | | |
| | REMARKS | (3, 4, 5) | | |

REMARKS

1. ALL BRONZE.
2. PUMP TO RUN ON TIME CLOCK FOR OCCUPIED HOURS. PUMP SHALL CYCLE THROUGH AQUASTAT DURING UNOCCUPIED HOURS.
3. IN-LINE PUMP.
4. SEE WATER HEATER DETAIL, SHEET M4.1, DETAIL 2.
5. PREMIUM EFFICIENCY MOTOR COMPATIBLE WITH VFD.
6. OR EQUAL – SEE SPECIFICATIONS

## PLUMBING FIXTURE SCHEDULE (1)

| TAG | FIXTURE (2) | FAUCET/ FLUSHVALVE/ ACCESSORY (2) | DESCRIPTION | CW | HW | WASTE | VENT |
|---|---|---|---|---|---|---|---|
| WC-1 | MODEL: KOHLER K-4302 "HIGHCREST" | MODEL: SLOAN REGAL 111-XL | DESCRIPTION: ELONGATED, SIPHON JET BOWL, FLOOR MOUNTED, FLOOR OUTLET WATER CLOSET WITH FLUSHOMETER.<br>ADA COMPLIANT: YES<br>COLOR: WHITE<br>FLUSHOMETER: TOP SPUD. 1.6 GALLONS PER FLUSH.<br>FLUSHOMETER FINISH: POLISHED CHROME.<br>FLUSHOMETER OPERATION: MANUAL.<br>SEAT: WHITE ELONGATED, OPEN FRONT WITHOUT COVER.<br>RIM HEIGHT: 17.5"-18" | 1-1/4" | – | 4" | 2" |
| L-1 | MODEL: KOHLER K-2005 "KINGSTON" | MODEL: KOHLER K-15597 "CORALAIS" | DESCRIPTION: WALL HANGING LAVATORY WITH MANUAL FAUCET.<br>ADA COMPLIANT: YES.<br>COLOR: WHITE.<br>FIXTURE DIMENSIONS: 21? X 18?<br>CONSTRUCTION: FAUCET INLET SPACING TO MATCH LAVATORY OPENINGS.<br>FAUCET VALVE OPERATION: MANUAL.<br>HANDLE: SINGLE-LEVER TOGGLE.<br>SPOUT: INTEGRAL WITH BODY, VANDAL RESISTANT AERATOR. 1/2-GPM FLOW.<br>DRAIN: GRID STRAINER.<br>ADA INSULATION KIT: PROVIDE SUPPLY AND DRAIN SOFT MOLDED INSULATION KITS FROM FIXTURE TO WALL. COVERINGS TO BE CUSHIONED JACKET PLASTIC COVERING WITH SELF STICKING FASTENING SYSTEM. | 1/2" | 1/2" | 1-1/4" | 1-1/4" |
| S-1 | MODEL: ELKAY LR-1316 | MODEL: AMERICAN STANDARD 7502.170 "MONTERREY" | DESCRIPTION: COUNTER MOUNTED 18 GA STAINLESS STEEL SINK WITH SWING SPOUT.<br>ADA COMPLIANT: YES<br>FIXTURE DIMENSIONS: DOUBLE BOWL 13" X 16"<br>CONSTRUCTION: FAUCET INLET SPACING TO MATCH SINK OPENINGS.<br>HANDLE: WRIST BLADE HADLES.<br>SPOUT: SWING WITH 1-1/2 GPM FLOW AERATOR.<br>DRAIN: 1-1/2" GRID STRAINER WITH 3-1/2" REMOVABLE STAINLESS STEEL CRUMB CUP. | 1/2" | 1/2" | 1-1/2" | 1-1/2" |
| S-2 | MODEL: ELKAY LRAD-2219 | MODEL: AMERICAN STANDARD 7502.170 "MONTERREY" | DESCRIPTION: COUNTER MOUNTED 18 GA STAINLESS STEEL SINK WITH SWING SPOUT.<br>ADA COMPLIANT: YES<br>FIXTURE DIMENSIONS: DOUBLE BOWL 22" X 19"<br>CONSTRUCTION: FAUCET INLET SPACING TO MATCH SINK OPENINGS.<br>HANDLE: WRIST BLADE HADLES.<br>SPOUT: SWING WITH 1-1/2 GPM FLOW AERATOR.<br>DRAIN: 1-1/2" GRID STRAINER WITH 3-1/2" REMOVABLE STAINLESS STEEL CRUMB CUP. | 1/2" | 1/2" | 1-1/2" | 1-1/2" |
| MS-1 | MODEL: WILLIAMS SB-900 "SERVICECEPTOR" | MODEL: KOHLER K-8908 "KINLOCK" | DESCRIPTION: FLOOR MOUNTED MOP SINK WITH WALL MOUNTED FAUCET.<br>ADA COMPLIANT: NOT REQUIRED<br>FIXTURE DIMENSIONS: 24" x 24" X 12" HIGH<br>FIXTURE CONSTRUCTION: TERRAZZO, MOLDED STONE, FIBERGLASS.<br>RIM GUARD: STAINLESS STEEL.<br>FAUCET: ROUGH CHROME, WIDESPREAD BAST BRASS WITH SUPPLIES 8" ON CENTER.<br>FAUCET MOUNTING: WALL CENTERED ON FIXTURE.<br>FAUCET HANDLE: DUAL LEVER.<br>FAUCET SPOUT: INTEGRAL VACUUM BREAKER, PAIL HOOK, AND HOSE THREAD OUTLET.<br>WALL BRACE: ASSEMBLY WITH WALL BRACKET AND SUPPORT TO FAUCET SPOUT. | 3/4" | 3/4" | 3" | 1-1/2" |
| D-1 | MODEL: J.R. SMITH #2005 | IMAGE NOT AVAILABLE | DESCRIPTION: FLOOR DRAIN WITH CAST IRON BODY, FLASHING COLLAR, 6" ROUND ADJUSTABLE NICKEL BRONZE GRATE. | NA | NA | 2" | 1-1/2" |
| D-2 | MODEL: J.R. SMITH #2210 | IMAGE NOT AVAILABLE | DESCRIPTION: FLOOR DRAIN WITH CAST IRON BODY, FLASHING COLLAR, SEDIMENT BUCKET, 8-1/2" ROUNDE NICKEL BRONZE GRATE. | NA | NA | 3" | 1-1/2" |
| HB-1 | MODEL: WOODFORD MODEL #24 | IMAGE NOT AVAILABLE | DESCRIPTION: HOSE BIBB WITH BRONZE BODY, RENEWABLE COMPOSITION DISC, 3/4" NPS THREADED OR SOLDER JOINT INLET. PROVIDE GARDEN HOSE THREADS ON OUTLET AND INTEGRAL, NON REMOVABLE, DRAINABLE, HOSE CONNECTION WITH ANTI-SIPHON VACUUM BREAKER.<br>1. FINISH: CHROME<br>2. OPERATION: WHEEL HANDLE | 3/4" | – | – | – |
| WH-1 | MODEL: WOODFORD MODEL #65 | IMAGE NOT AVAILABLE | DESCRIPTION: WALL HYDRANT WITH THE FOLLOWING FEATURES: NONFREEZE, AUTOMATIC DRAINING, ANTIBACKFLOW TYPE, KEY OPERATION, 3/4" NPS THREADED OR SOLDER JOINT INLET, AND GARDEN HOSE THREADS ON OUTLET. INCLUDE OPERATING KEY FOR EACH HYDRANT.<br>1. TYPE: SURFACE MOUNT<br>2. OPERATION: CHROME PLATED | 3/4" | – | – | – |
| WMB-1 | IMAGE NOT AVAILABLE<br>MODEL: X | IMAGE NOT AVAILABLE | DESCRIPTION: CLOTHES WASHER OUTLET BOXES WITH RECESSED BOX AND FACEPLATE, TWO ½? HOSE CONNECTIONS WITH SHUT-OFF VALVES, 2? STANDPIPE AND DRAIN, AS INDICATED ON DRAWINGS. | 3/4" | 3/4" | 2" | 2" |

REMARKS:

(1) SEE SPECIFICATIONS FOR ADDITIONAL REQUIREMENTS INCLUDING STOPS, FITTINGS AND ALL OTHER SPECIALTIES.
(2) PICTURES OF FIXTURES DO NOT INDICATE ACTUAL FIXTURE SPECIFIED. PICTURES ARE GRAPHICAL IN NATURE. SEE DESCRIPTION FOR ACTUAL FIXTURE AND MODEL.

Offutt
Air Force Base

APPROVED

| SIGNATURE | OFFICE |
|---|---|

COORDINATION

"SIGNING OF THE COVER SHEET CONSTITUTES COORDINATION OF ALL DRAWINGS IN THIS PROJECT; SUBSEQUENT SHEETS NEED NOT BE SIGNED."


DESIGN FIRM

ARCHITECT
ALLEY POYNER MACCHIETTO ARCHITECTURE, P.C.

MECHANICAL / ELECTRICAL
MORRISSEY ENGINEERING

STRUCTURAL
PERFORMANCE ENGINEERING

CIVIL ENGINEERING
KIRKHAM MICHAEL



The attached electronic document(s) is an instrument of service prepared by Alley Poyner Architecture and is being provided as requested by Offutt Air Force Base. The paper format of these drawings bear the seal(s) of the Registered Professional Architects and Engineers of Record. Due to the easily alterable nature of electronic documents, through either intentional or unintentional means, Alley Poyner Architecture does not make any express or implied warranty for the accuracy or completeness of this information. Hard copies (i.e., prints, paper copies, etc.) shall prevail in any dispute over accuracy or sufficiency of electronic documents.


| Designer | Project Manager |
|---|---|
| NJL | ATM |
| **Drafter** | **Date** |
| BJK | 30-MAY-2008 |

| REVISION | BY/DATE |
|---|---|

SHEET TITLE
**M5.1 MECHANICAL SCHEDULES**

SHEET **26** OF 32

PROJECT TITLE
CONSTRUCT VETERINARY CLINIC, B595

Project Number
SGBP-07-0019

| Drawing Number | Facility Number |
|---|---|
| OFF-B-6052 | 595 |

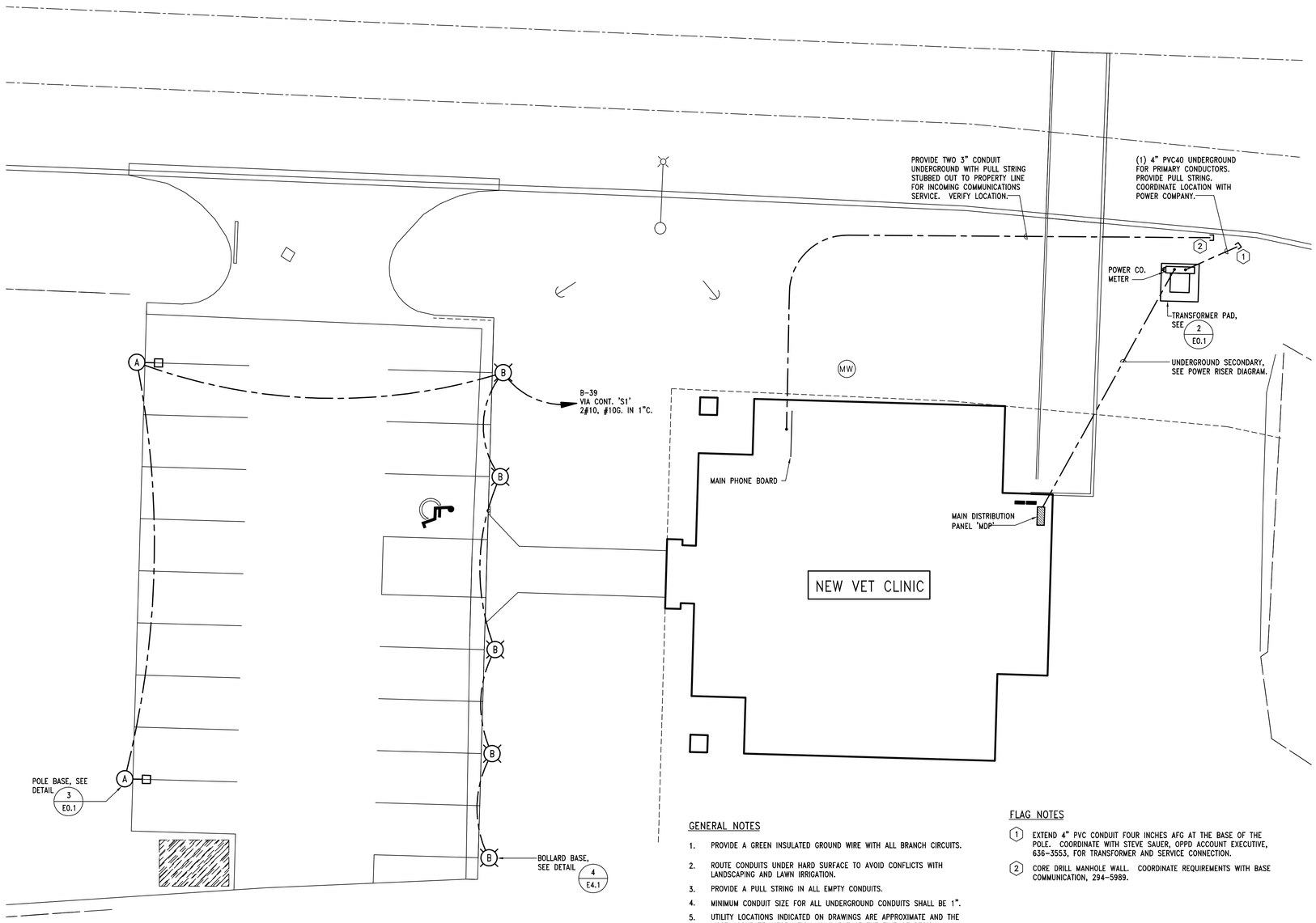


## 1 SITE PLAN – ELECTRICAL

E0.1 SCALE: 1" = 10'-0"

### GENERAL NOTES

1. PROVIDE A GREEN INSULATED GROUND WIRE WITH ALL BRANCH CIRCUITS.
2. ROUTE CONDUITS UNDER HARD SURFACE TO AVOID CONFLICTS WITH LANDSCAPING AND LAWN IRRIGATION.
3. PROVIDE A PULL STRING IN ALL EMPTY CONDUITS.
4. MINIMUM CONDUIT SIZE FOR ALL UNDERGROUND CONDUITS SHALL BE 1".
5. UTILITY LOCATIONS INDICATED ON DRAWINGS ARE APPROXIMATE AND THE MOST ACCURATE INFORMATION AVAILABLE AT THE TIME OF DESIGN. PRIOR TO EQUIPMENT AND CONDUIT INSTALLATION, THE CONTRACTOR SHALL COORDINATE EXACT INSTALLATION DETAILS AND MODIFY WORK PLAN ACCORDINGLY TO MEET UTILITY REQUIREMENTS. CORRESPOND WITH UTILITY COMPANY PRIOR TO ANY SITE DEVELOPMENT THAT MAY IMPACT THE INSTALLATION SUCH AS IRRIGATION IN-STALLATION, CONCRETE OR ASPHALT INSTALLATION, LANDSCAPING, ETC.

### FLAG NOTES

1. EXTEND 4" PVC CONDUIT FOUR INCHES AFG AT THE BASE OF THE POLE. COORDINATE WITH STEVE SAUER, OPPD ACCOUNT EXECUTIVE, 636-3553, FOR TRANSFORMER AND SERVICE CONNECTION.
2. CORE DRILL MANHOLE WALL. COORDINATE REQUIREMENTS WITH BASE COMMUNICATION, 294-5989.

N

## SITE LIGHTING SCHEDULE

| FIXT # | MANUFACTURER | CATALOG NO. – NOTE 1 | BEAM DIST. | LAMP DATA SIZE | LAMP DATA TYPE | VOLTAGE | QTY. PER POLE | POLE DESCRIPTION TYPE NOTE 2 | POLE DESCRIPTION FINISH | POLE DESCRIPTION HT. (FT.) | DESCRIPTION | REMARKS |
|---|---|---|---|---|---|---|---|---|---|---|---|---|
| A | LITHONIA | KSF1 250M R3 208 SP06 DBL | III | 250W | MH | 208 | 1 | SSS | DBL | 20'-0" | SINGLE HEAD | |
| B | ARCHITECTURAL LANDSCAPE LIGHTING | LL-31 42CFT 208 30" BK EMG | | 42W TRT | CF | 208 | 1 | | | | BOLLARD | W/ EMERG. BATTERY |

NOTES:

1. CONTRACTOR SHALL VERIFY LIGHT FIXTURE CATALOG NUMBER & INSTALLATION REQUIREMENTS PRIOR TO ORDERING.
2. POLE TYPE DESCRIPTION: SSS = SQUARE STRAIGHT STEEL, STS = SQUARE TAPERED STEEL, RSS = ROUND STRAIGHT STEEL, RTS = ROUND TAPERED STEEL
SSA = SQUARE STRAIGHT ALUMINUM, STS = SQUARE TAPERED STEEL, RSA = ROUND STRAIGHT ALUMINUM, RTA = ROUND TAPERED ALUMINUM

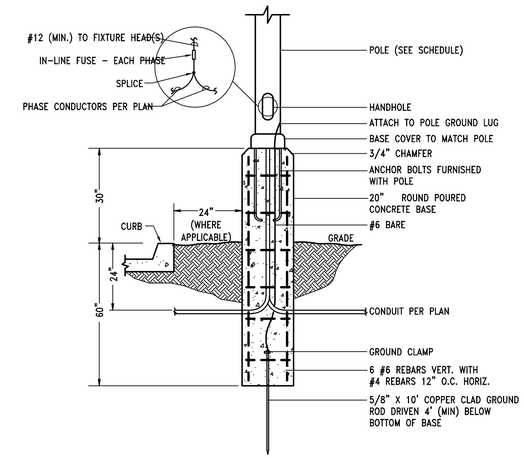


## 3 POLE BASE DETAIL

SCALE: NO SCALE

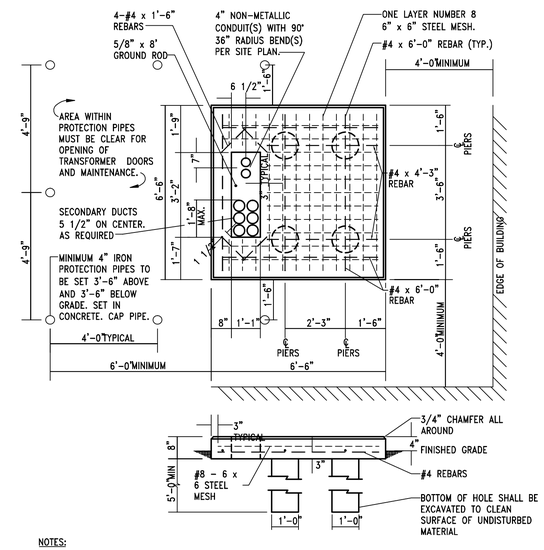


NOTES:

1. THE TOP ONE (1) FOOT OF SUBGRADE BENEATH THE SLAB SHALL BE THOROUGHLY COMPACTED TO 90% OF MAXIMUM DENSITY PER ASTM D698.
2. IF THE TOP THREE (3) FEET OF SUBGRADE BENEATH THE SLAB IS SUSCEPTIBLE TO A HIGH WATER TABLE OR PERIODIC SATURATION, THE EXISTING SOIL SHALL BE EXCAVATED AND BACKFILLED WITH A CLEAN SAND OR GRAVEL AND THOROUGHLY COMPACTED TO 90% OF MAXIMUM DENSITY PER ASTM D2049 AND D1556.
3. SLAB TO BE MADE OF SG-6 CONCRETE WITH A MINIMUM 28 DAY STRENGTH OF 3,000 PSI.
4. DUCTS ARE NOT BE BE INSTALLED IN CONCRETE WITHIN SLOT.
5. TOP OF SLAB MUST BE SMOOTH, FLAT AND LEVEL.
6. NO WALLS TO BE BUILT AROUND OR CANOPIES ABOVE TRANSFORMER.
7. ALL CONDUITS ENTERING SLAB TO BE VERTICAL AND AT 90° ANGLE WITH TOP OF SLAB.
8. COORDINATE WITH SERVING UTILITY COMPANY TO ALLOW ANY REQUIRED INSPECTIONS BEFORE, DURING, AND AFTER CONSTRUCTION OF PAD.
9. LOCATION AND DIMENSIONS OF SLOT AND CONDUITS MUST BE MAINTAINED IN RELATION TO OVERALL SLAB DIMENSIONS.

## 2 TRANSFORMER PAD DETAIL

SCALE: NO SCALE

Offutt Air Force Base

APPROVED

| SIGNATURE | OFFICE |
|---|---|

COORDINATION

"SIGNING OF THE COVER SHEET CONSTITUTES COORDINATION OF ALL DRAWINGS IN THIS PROJECT; SUBSEQUENT SHEETS NEED NOT BE SIGNED."

DESIGN FIRM

ARCHITECT
ALLEY POYNER MACCHIETTO ARCHITECTURE, P.C.

MECHANICAL / ELECTRICAL
MORRISSEY ENGINEERING

STRUCTURAL
PERFORMANCE ENGINEERING

CIVIL ENGINEERING
KIRKHAM MICHAEL

The attached electronic document(s) is an instrument of service prepared by Alley Poyner Architecture and is being provided as requested by Offutt Air Force Base. The paper format of these drawings bear the seal(s) of the Registered Professional Architects and Engineers of Record. Due to the easily alterable nature of electronic documents, through either intentional or unintentional means, Alley Poyner Architecture does not make any express or implied warranty for the accuracy or completeness of this information. Hard copies (i.e., prints, paper copies, etc.) shall prevail in any dispute over accuracy or sufficiency of electronic documents.

| Designer | Project Manager |
|---|---|
| SMF | ATM |
| **Drafter** | **Date** |
| SMF | 30-MAY-2008 |

| REVISION | BY/DATE |
|---|---|

SHEET TITLE
E0.1
SITE PLAN - ELECTRICAL

SHEET 27 OF 32

PROJECT TITLE
CONSTRUCT VETERINARY CLINIC, B595

Project Number
SGBP-07-0019

| Drawing Number | Facility Number |
|---|---|
| OFF-B-6052 | 595 |

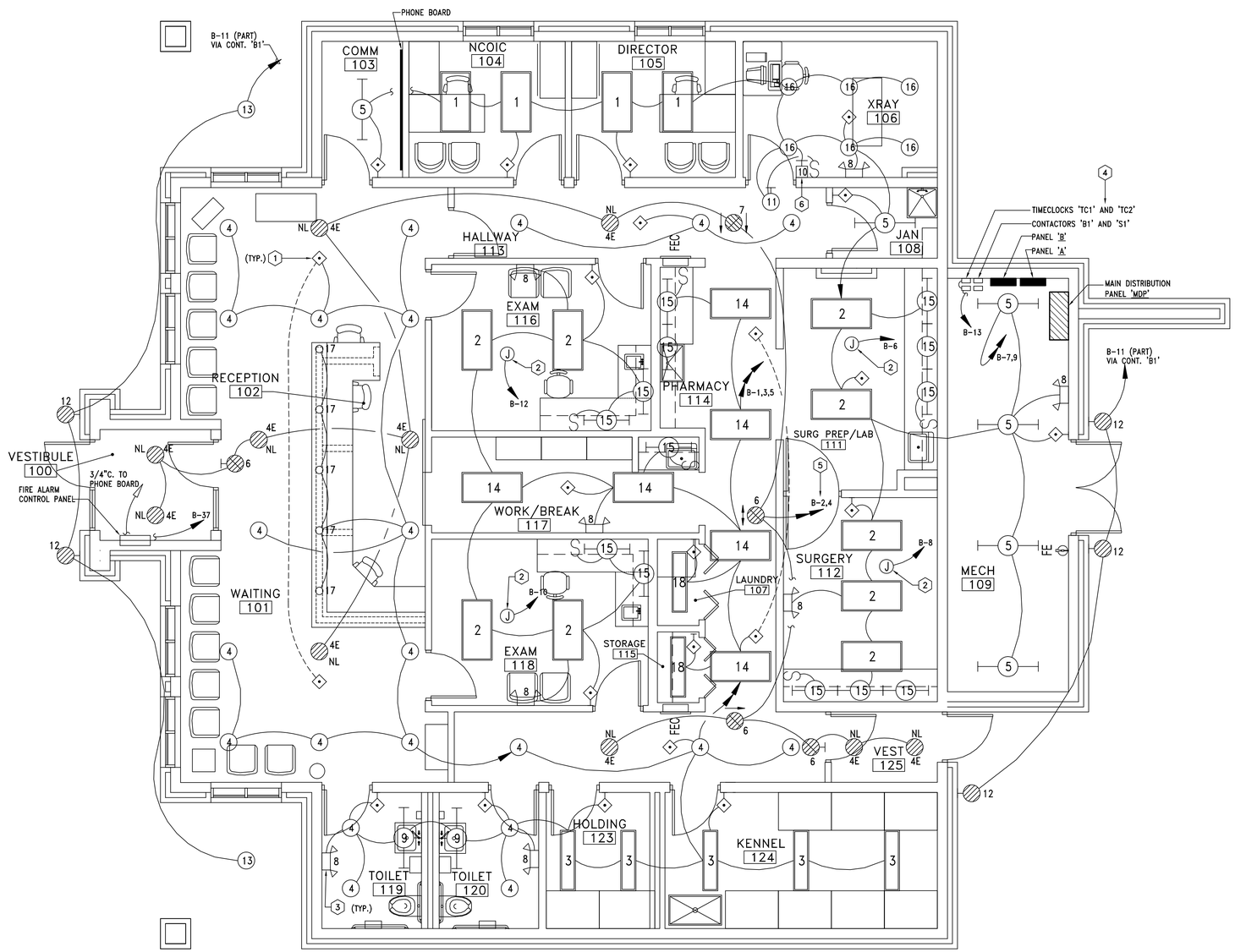


1 E1.1 FLOOR PLAN – LIGHTING

SCALE:1/4" = 1'-0"

## FLAG NOTES

1. CEILING OCCUPANCY SENSOR, SEE 1/E4.1
2. PROVIDE FLUSH MOUNTED CEILING JUNCTION BOX FOR CONNECTION EXAM LIGHT. EXAM LIGHTS ARE GOVERNMENT FURNISHED CONTRACTOR INSTALLED. VERIFY ELECTRICAL CONNECTION REQUIREMENTS PRIOR TO INSTALLATION.
3. CONNECT EMERGENCY BATTERY FIXTURE SENSING LEAD AHEAD OF LOCAL SWITCHING.
4. TIMECLOCK 'TC1' FOR CONTROL OF CONTACTORS 'B1' AND 'S1', SEE 5/E4.1
5. CONNECT FIRST CIRCUIT UNSWITCHED TO EMERGENCY/NIGHT LIGHTS. CONNECT REMAINING CIRCUIT TO EXIT LIGHTS. PROVIDE BREAKER LOCK.
6. INCANDESCENT WALLBOX DIMMER SWITCH. PROVIDE MINIMUM VA RATING AS INDICATED ON DRAWING

## GENERAL NOTES

1. PROVIDE GREEN INSULATED GROUND WIRE IN ALL LIGHTING BRANCH CIRCUITS.
2. SUBSCRIPT 'NL' INDICATES FIXTURE CONNECTED UNSWITCHED TO NIGHT LIGHTING CIRCUIT.
3. HATCHING INDICATES FIXTURE PROVIDED WITH INTEGRAL EMERGENCY BATTERY.
4. PROVIDE A DEDICATED NEUTRAL CONDUCTOR FOR ALL DIMMED LIGHTING LOADS.

Offutt Air Force Base

APPROVED

| SIGNATURE | OFFICE |
|---|---|

COORDINATION

"SIGNING OF THE COVER SHEET CONSTITUTES COORDINATION OF ALL DRAWINGS IN THIS PROJECT; SUBSEQUENT SHEETS NEED NOT BE SIGNED."

DESIGN FIRM

ARCHITECT
ALLEY POYNER MACCHIETTO ARCHITECTURE, P.C.

MECHANICAL / ELECTRICAL
MORRISSEY ENGINEERING

STRUCTURAL
PERFORMANCE ENGINEERING

CIVIL ENGINEERING
KIRKHAM MICHAEL

The attached electronic document(s) is an instrument of service prepared by Alley Poyner Architecture and is being provided as requested by Offutt Air Force Base. The paper format of these drawings bear the seal(s) of the Registered Professional Architects and Engineers of Record. Due to the easily alterable nature of electronic documents, through either intentional or unintentional means, Alley Poyner Architecture does not make any express or implied warranty for the accuracy or completeness of this information. Hard copies (i.e., prints, paper copies, etc.) shall prevail in any dispute over accuracy or sufficiency of electronic documents.

| Designer | Project Manager |
|---|---|
| SMF | ATM |
| Drafter | Date |
| SMF | 30-MAY-2008 |

| REVISION | BY/DATE |
|---|---|

SHEET TITLE
E1.1
FLOOR PLAN – LIGHTING

| SHEET | OF |
|---|---|
| 28 | 32 |

PROJECT TITLE
CONSTRUCT VETERINARY CLINIC, B595

Project Number
SGBP-07-0019

| Drawing Number | Facility Number |
|---|---|
| OFF-B-6052 | 595 |

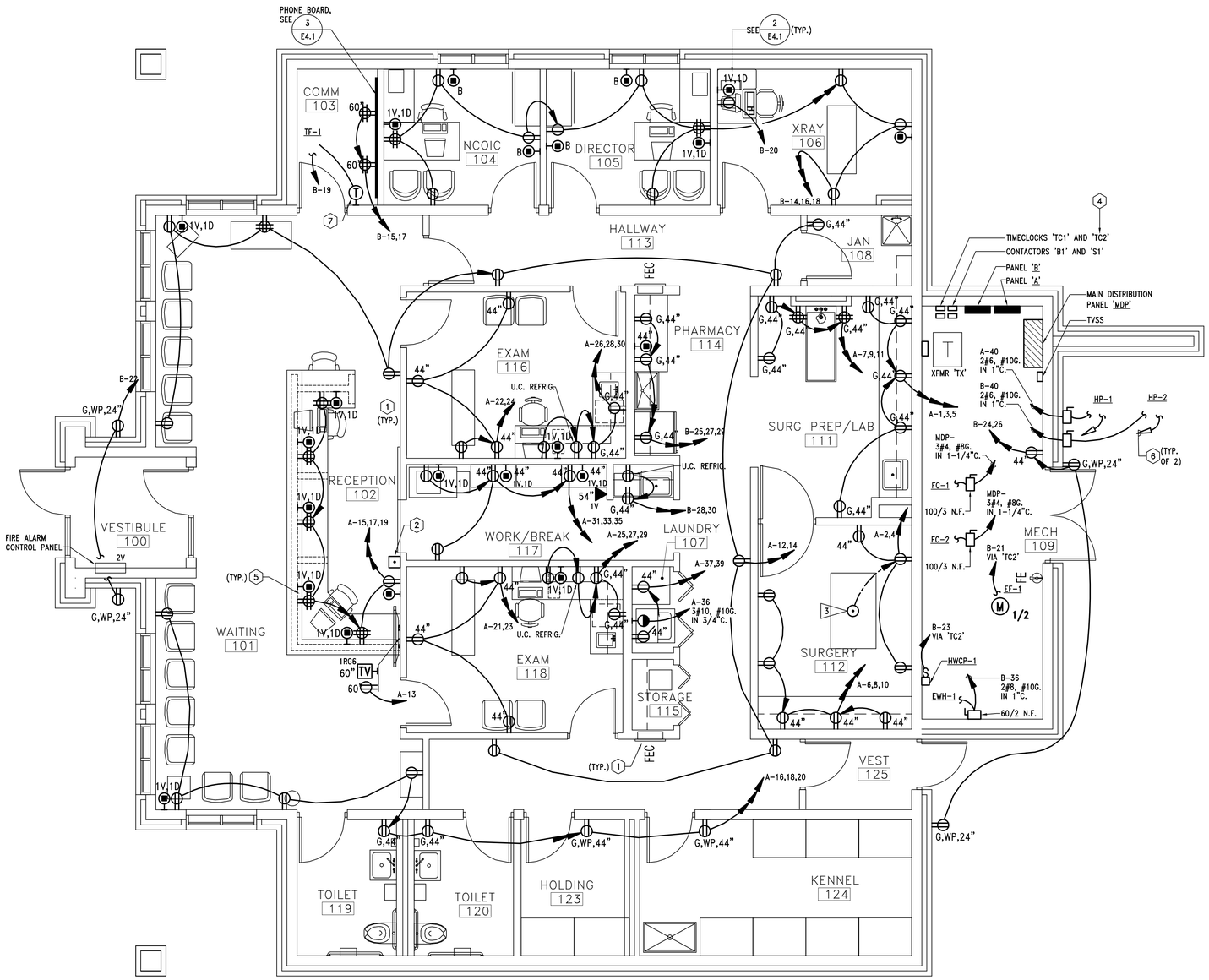


1 FLOOR PLAN – POWER
E2.1 SCALE:1/4" = 1'-0"

N

## FLAG NOTES

1. THERMOSTAT BY MECHANICAL. PROVIDE SINGLE GANG JUNCTION BOX FOR THERMOSTAT ROUGH-IN WITH 1/2"C. STUBBED TO ABOVE ACCESSIBLE CEILING SPACE. COORDINATE LOCATIONS WITH MECHANICAL CONTRACTOR PRIOR TO ROUGH-IN.
2. PROVIDE STI (OR EQUAL) SERIES 2000 STOPPER STATION CONNECTED TO SHUTDOWN MECHANICAL UNITS. PROVIDE WITH CUSTOM LABEL TO READ 'HVAC SHUTDOWN'. PROVIDE WITH STI MINI STOPPER II PROTECTIVE COVER.
3. PROVIDE DUPLEX FLOOR OUTLET.
4. TIMECLOCK 'TC2' FOR CONTROL OF EXHAUST FAN 'EF-1' AND HOT WATER CIRCULATION PUMP 'HWCP-1'. PROVIDE TORK MODEL NO. 'DT200' (OR EQUAL) TWO-CHANNEL, 7-DAY DIGITAL TIMECLOCK.
5. FLUSH MOUNT DEVICES WITHIN KNEESPACE OF CASEWORK. CONCEAL ALL CONDUIT WITHIN CASEWORK. SEE ARCHITECTURAL DETAILS FOR MORE INFORMATION.
6. PROVIDE 1/2"C. WITH PULL STRING TO ASSOCIATED FAN COIL UNIT FOR CONTROL WIRING BY OTHERS.
7. PROVIDE LINE VOLTAGE THERMOSTAT FOR CONTROL OF 'TF-1'. COORDINATE WITH MECHANICAL CONTRACTOR.

## GENERAL NOTES

1. PROVIDE GREEN INSULATED GROUND WIRE IN ALL RECEPTACLE AND EQUIPMENT BRANCH CIRCUITS.

## Telecommunications Legend

| SYMBOL | DESCRIPTION |
|---|---|
| | COMMUNICATIONS OUTLET<br># = NUMBER OF CABLES AND TYPE OF CABLES (V=VOICE, D=DATA, B=BLANK) |
| | COMMUNICATIONS FLOOR BOX<br># = NUMBER OF CABLES AND TYPE OF CABLES (V=VOICE, D=DATA) |
| | WALL PHONE OUTLET<br># = NUMBER OF CABLES (V=VOICE) |
| | POKE-THRU DEVICE<br># = NUMBER OF CABLES AND TYPE OF CABLES (V=VOICE, D=DATA, RG6=COAX) |
| TV | TELEVISION/VIDEO OUTLET<br># = NUMBER OF CABLES (RG6=COAX) |

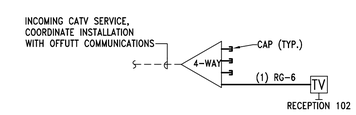


2 CATV ONE-LINE
SCALE: NO SCALE

Offutt Air Force Base

| APPROVED | |
|---|---|
| SIGNATURE | OFFICE |
| COORDINATION | |

"SIGNING OF THE COVER SHEET CONSTITUTES COORDINATION OF ALL DRAWINGS IN THIS PROJECT; SUBSEQUENT SHEETS NEED NOT BE SIGNED."

DESIGN FIRM

ARCHITECT
ALLEY POYNER MACCHIETTO ARCHITECTURE, P.C.

MECHANICAL / ELECTRICAL
MORRISSEY ENGINEERING

STRUCTURAL
PERFORMANCE ENGINEERING

CIVIL ENGINEERING
KIRKHAM MICHAEL

The attached electronic document(s) is an instrument of service prepared by Alley Poyner Architecture and is being provided as requested by Offutt Air Force Base. The paper format of these drawings bear the seal(s) of the Registered Professional Architects and Engineers of Record. Due to the easily alterable nature of electronic documents, through either intentional or unintentional means, Alley Poyner Architecture does not make any express or implied warranty for the accuracy or completeness of this information. Hard copies (i.e., prints, paper copies, etc.) shall prevail in any dispute over accuracy or sufficiency of electronic documents.

| Designer | Project Manager |
|---|---|
| SMF | ATM |
| Drafter | Date |
| SMF | 30-MAY-2008 |

| REVISION | BY/DATE |
|---|---|

SHEET TITLE
E2.1
FLOOR PLAN – POWER

| SHEET | OF |
|---|---|
| 29 | 32 |

PROJECT TITLE
CONSTRUCT VETERINARY CLINIC, B595

Project Number
SGBP-07-0019

| Drawing Number | Facility Number |
|---|---|
| OFF-B-6052 | 595 |

FLAG NOTES

1. FIRE ALARM SHUT DOWN RELAY (ONE PER FAN COIL UNIT). CONNECT TO SHUT DOWN UNIT UPON DETECTION OF SMOKE IN THE BUILDING.
2. SMOKE DETECTOR LOCATED WITHIN ATTIC SPACE ABOVE.

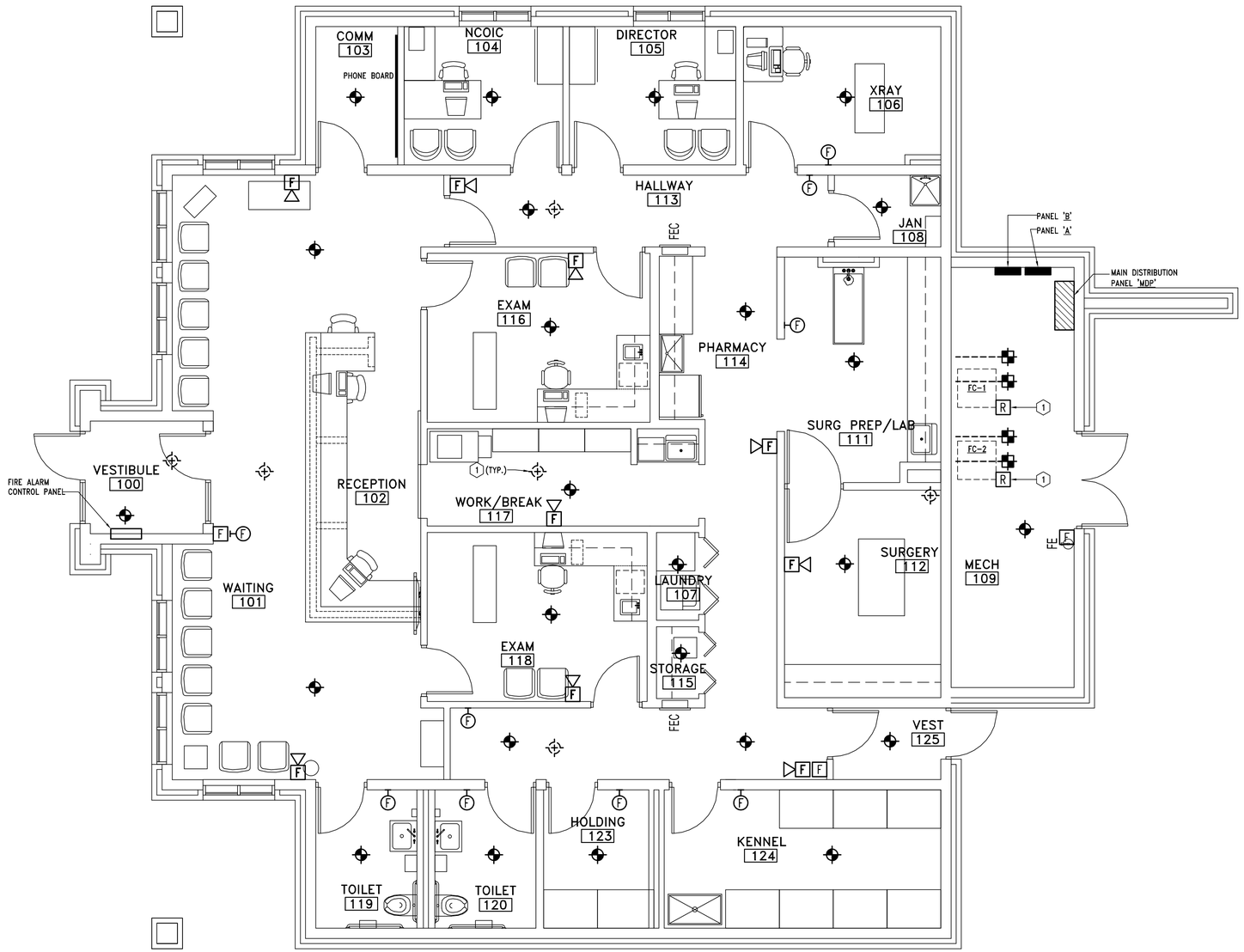


1 FLOOR PLAN – SPECIAL SYSTEMS
E3.1 SCALE:1/4" = 1'-0"

N

Offutt Air Force Base

APPROVED

| SIGNATURE | OFFICE |
|---|---|
| | |

COORDINATION

"SIGNING OF THE COVER SHEET CONSTITUTES COORDINATION OF ALL DRAWINGS IN THIS PROJECT; SUBSEQUENT SHEETS NEED NOT BE SIGNED."

DESIGN FIRM

ARCHITECT
ALLEY POYNER MACCHIETTO ARCHITECTURE, P.C.

MECHANICAL / ELECTRICAL
MORRISSEY ENGINEERING

STRUCTURAL
PERFORMANCE ENGINEERING

CIVIL ENGINEERING
KIRKHAM MICHAEL

The attached electronic document(s) is an instrument of service prepared by Alley Poyner Architecture and is being provided as requested by Offutt Air Force Base. The paper format of these drawings bear the seal(s) of the Registered Professional Architects and Engineers of Record. Due to the easily alterable nature of electronic documents, through either intentional or unintentional means, Alley Poyner Architecture does not make any express or implied warranty for the accuracy or completeness of this information. Hard copies (i.e., prints, paper copies, etc.) shall prevail in any dispute over accuracy or sufficiency of electronic documents.

| Designer | Project Manager |
|---|---|
| SMF | ATM |
| **Drafter** | **Date** |
| SMF | 30-MAY-2008 |

| REVISION | BY/DATE |
|---|---|
| | |

SHEET TITLE
E3.1
FLOOR PLAN – SPECIAL SYSTEMS

| SHEET | OF |
|---|---|
| 30 | 32 |

PROJECT TITLE
CONSTRUCT VETERINARY CLINIC, B595

Project Number
SGBP-07-0019

| Drawing Number | Facility Number |
|---|---|
| OFF-B-6052 | 595 |

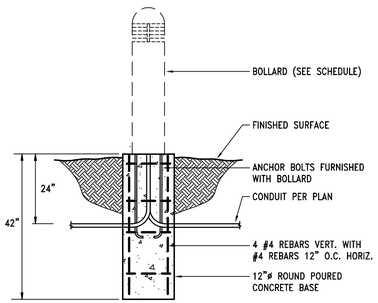


## 4 BOLLARD BASE DETAIL
SCALE: NO SCALE

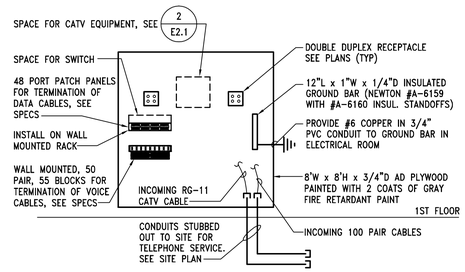


NOTES:

1. ALL INCOMING TELECOMMUNICATIONS SERVICES ARE INSTALLED BY THE ELECTRICAL CONTRACTOR FROM THE MANHOLE LOCATION ON SITE. THE ELECTRICAL CONTRACTOR TERMINATES ALL CABLES AT THE MECHANICAL ROOM AND ALL THE OUTLETS.
2. COORDINATE ALL CONNECTION REQUIREMENTS WITH THE BASE COMMUNICATION, 294-5989.

## 3 COMMUNICATION BOARD DETAIL
SCALE: NO SCALE

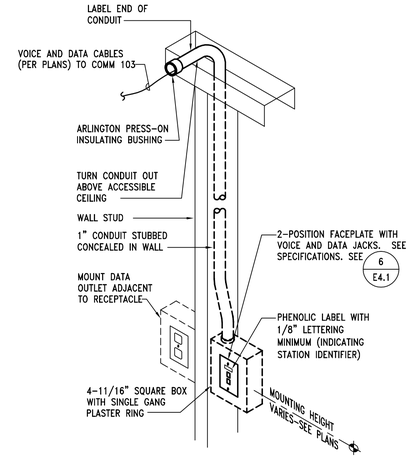


## 2 DATA/COMM/TV DETAIL
SCALE: NO SCALE

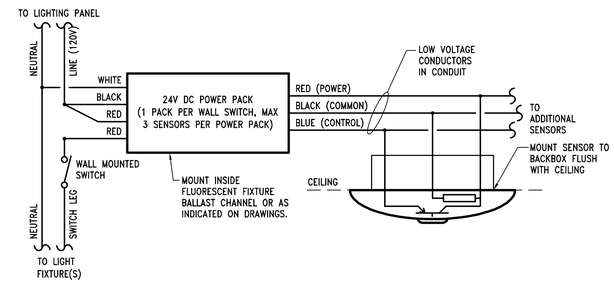


## 1 TYPICAL CEILING OCCUPANCY SENSOR
SCALE: NO SCALE

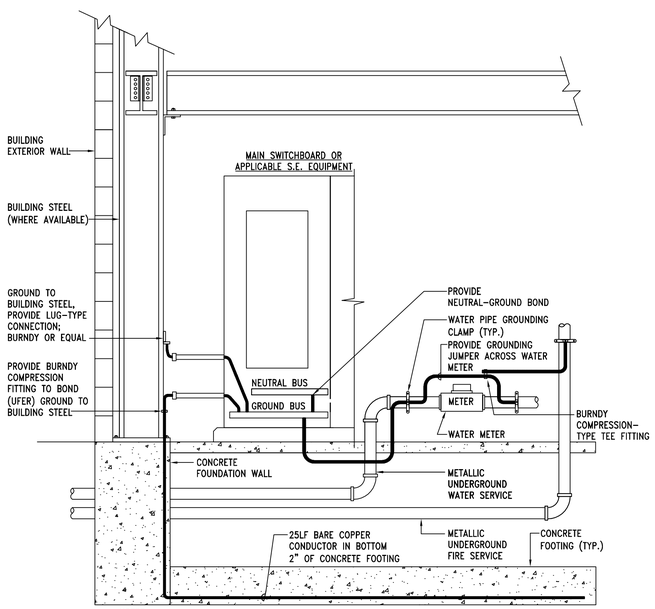


NOTES:

1. PHYSICAL LAYOUT SHOULD BE DETERMINED FROM FLOOR PLAN DRAWINGS AND FIELD DIMENSIONS.
2. ALL GROUNDING CONDUCTORS SIZED IN ACCORDANCE WITH NEC TABLE 250.66.
3. ALL CLAMPS AND FITTINGS SHALL BE UL LISTED FOR THE APPLICATION.

## 8 MAIN SERVICE GROUNDING DETAIL
SCALE: NO SCALE

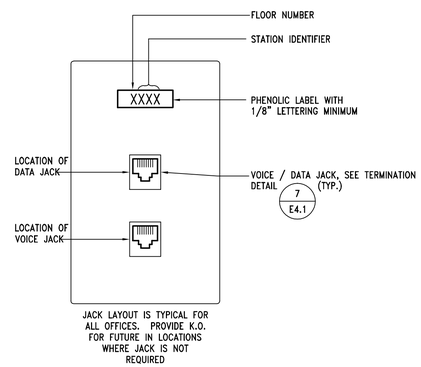


## 6 COMMUNICATIONS OUTLET FACEPLATE DETAIL
SCALE: NO SCALE

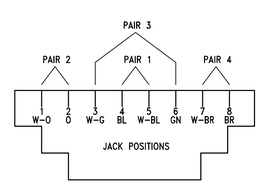


## 7 JACK CABLE TERMINATION
SCALE: NO SCALE

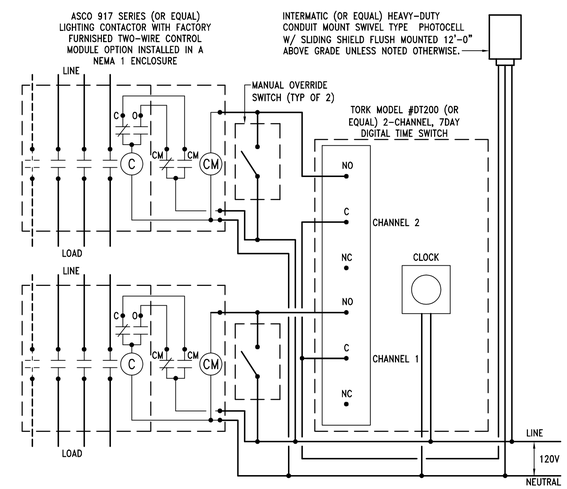


## 5 PHOTOCELL ON / TIMECLOCK OFF DETAIL
SCALE: NO SCALE

Offutt
Air Force Base

APPROVED

| SIGNATURE | OFFICE |
|---|---|

COORDINATION

"SIGNING OF THE COVER SHEET CONSTITUTES COORDINATION OF ALL DRAWINGS IN THIS PROJECT; SUBSEQUENT SHEETS NEED NOT BE SIGNED."

DESIGN FIRM

ARCHITECT
ALLEY POYNER MACCHIETTO ARCHITECTURE, P.C.

MECHANICAL / ELECTRICAL
MORRISSEY ENGINEERING

STRUCTURAL
PERFORMANCE ENGINEERING

CIVIL ENGINEERING
KIRKHAM MICHAEL

The attached electronic document(s) is an instrument of service prepared by Alley Poyner Architecture and is being provided as requested by Offutt Air Force Base. The paper format of these drawings bear the seal(s) of the Registered Professional Architects and Engineers of Record. Due to the easily alterable nature of electronic documents, through either intentional or unintentional means, Alley Poyner Architecture does not make any express or implied warranty for the accuracy or completeness of this information. Hard copies (i.e., prints, paper copies, etc.) shall prevail in any dispute over accuracy or sufficiency of electronic documents.

| Designer | Project Manager |
|---|---|
| SMF | ATM |
| Drafter | Date |
| SMF | 30-MAY-2008 |

| REVISION | BY/DATE |
|---|---|

SHEET TITLE
E4.1
ELECTRICAL DETAILS

| SHEET | OF |
|---|---|
| 31 | 32 |

PROJECT TITLE
CONSTRUCT VETERINARY CLINIC, B595

Project Number
SGBP-07-0019

| Drawing Number | Facility Number |
|---|---|
| OFF-B-6052 | 595 |

# ELECTRICAL SYMBOLS

| SYMBOL | DESCRIPTION | SYMBOL | DESCRIPTION |
|---|---|---|---|
| **LIGHTING** | | | |
| | FLUORESCENT FIXTURE | | POLE FIXTURE(S) |
| # | NUMBER DENOTES FIXTURE TYPE, SEE CORRESPONDING NUMBER IN FIXTURE SCHEDULE | | BOLLARD FIXTURE |
| | SHADING DENOTES FIXTURE CONNECTED TO EMERGENCY CIRCUIT OR WITH BATTERY | S | SINGLE POLE SWITCH |
| | FLUORESCENT STRIP FIXTURE | $S_2$ | DOUBLE POLE SWITCH |
| | WALL BRACKET FIXTURE | $S_3$ | 3 – WAY SWITCH |
| | | $S_4$ | 4 – WAY SWITCH |
| | CEILING FIXTURE | $S_M$ | MOMENTARY CONTACT SWITCH |
| | WALL FIXTURE | # | WALL BOX DIMMER SWITCH (NUMBER INDICATES WATTAGE: "6"–600W, "10"–1000W, "15"–1500W, "20"–2000W) |
| | TRACK FIXTURE | | |
| | EMERGENCY BATTERY PACK | | CEILING MOUNTED MOTION SENSOR/SWITCH |
| # | CEILING MOUNTED EXIT LIGHT WITH DIRECTIONAL ARROW – NUMBER INDICATES FIXTURE NUMBER IN SCHEDULE | | WALL MOUNTED MOTION SENSOR/SWITCH |
| # | WALL OR END MOUNTED EXIT LIGHT WITH DIRECTIONAL ARROW – NUMBER INDICATES FIXTURE NUMBER IN SCHEDULE | | |
| **FIRE ALARM** | | | |
| | FIRE ALARM SMOKE DETECTOR | | FIRE ALARM HORN & STROBE COMBINATION |
| | FIRE ALARM HEAT DETECTOR | | FIRE ALARM MINI-HORN & STROBE COMBINATION |
| | DUCT MOUNTED SMOKE DETECTOR | | CEILING FIRE ALARM STROBE |
| | FIRE ALARM MANUAL PULL STATION | | WALL FIRE ALARM STROBE |
| | FIRE SPRINKLER VALVE TAMPER SWITCH | | CEILING FIRE ALARM SPEAKER & STROBE COMBINATION |
| | FIRE SPRINKLER FLOW SWITCH | | WALL FIRE ALARM SPEAKER & STROBE COMBINATION |
| | FIRE ALARM CONTROL PANEL | | FIRE ALARM BELL |
| | FIRE ALARM ANNUNCIATOR PANEL | | |
| | FIRE ALARM MAGNETIC DOOR HOLDER | | |
| | FIRE FIGHTER'S TELEPHONE JACK | | |
| **POWER** | | | |
| | DUPLEX RECEPTACLE | | FLOOR BOX – COMBINATION POWER & TELEPHONE |
| | "G" DENOTES GFCI TYPE | | FLOOR BOX – COMBINATION POWER & DATA |
| | TRIANGLE DENOTES ISOLATED GROUND TYPE | | FLOOR BOX – COMBINATION POWER, TELEPHONE & DATA |
| | STAR DENOTES HIGH ABUSE TYPE | | WALL CLOCK HANGER OUTLET |
| | "S" DENOTES SAFETY TYPE | | MULTI-OUTLET ASSEMBLY – LENGTH AS INDICATED |
| | DOUBLE SHADING DENOTES RED DEVICE | $M_#$ | MOTOR – NUMBER DENOTES HORSEPOWER |
| | SINGLE SHADING DENOTES SPLIT WIRED DEVICE | | DISCONNECT SWITCH |
| | HORIZONTAL MOUNTED DUPLEX RECEPTACLE | $S_{th}$ | THERMAL ELEMENT SWITCH |
| | CEILING MOUNTED DUPLEX RECEPTACLE | | SWITCH & FUSE |
| | FLOOR MOUNTED DUPLEX RECEPTACLE | | SWITCH & FUSTAT |
| | DOUBLE DUPLEX RECEPTACLE | | SINGLE PHASE MAGNETIC MOTOR STARTER |
| | SINGLE RECEPTACLE | | THREE PHASE MAGNETIC MOTOR STARTER |
| | DRYER RECEPTACLE NEMA 14-30 (125/250V 30A) | | COMBINATION MAGNETIC STARTER/DISCONNECT |
| | RANGE RECEPTACLE NEMA 14-50 (125/250V 50A) | | MOTOR CONTROL PUSHBUTTON STATION |
| $W_W$ | WELDER RECEPTACLE NEMA 6-50 (250V 50A) | | RELAY |
| | SPECIAL PURPOSE RECEPTACLE (NEMA CONFIG. AS NOTED) | | |
| **COMMUNICATION** | | | |
| | TELEPHONE OUTLET | | CEILING SPEAKER |
| | DATA OUTLET | | WALL SPEAKER |
| | COMBINATION TELEPHONE/DATA OUTLET | | WALL MICROPHONE OUTLET |
| | FLOOR TELEPHONE OUTLET | | FLOOR MICROPHONE OUTLET |
| | FLOOR DATA OUTLET | | VOLUME CONTROL |
| | FLOOR COMBINATION TELEPHONE/DATA OUTLET | | CALL SWITCH |
| | TELEVISION/VIDEO OUTLET | | INTERCOM OUTLET |
| | | | INTERCOM CONTROL PANEL |
| **SECURITY** | | | |
| | CEILING MOUNTED SECURITY MOTION DETECTOR | # | VIDEO CAMERA ("#" INDICATES WALL MOUNTED) |
| | WALL MOUNTED SECURITY MOTION DETECTOR | | SECURITY KEYPAD |
| | DOOR CONTACT | | SECURITY CONTROL PANEL |
| **GENERAL** | | | |
| | LIGHTING PANEL | | WALL MOUNTED JUNCTION BOX |
| | DISTRIBUTION PANEL SWITCHBOARD OR MOTOR CONTROL CENTER | # | JUNCTION BOX ("#" INDICATES FLOOR, "C" INDICATES CEILING) |
| | TELEPHONE TERMINAL CABINET | | PHOTOCELL |
| | BRANCH CIRCUIT – EXPOSED | | CONDUIT SEAL |
| | BRANCH CIRCUIT CONCEALED IN CEILING OR WALL | | CIRCUIT DOWN |
| | BRANCH CIRCUIT CONCEALED IN FLOOR | | CIRCUIT UP |
| | HOMERUN TO PANEL (QUANTITY OF ARROWS INDICATES QUANTITY OF CIRCUITS) | | CONDUIT STUB-OUT |
| | SPECIAL PURPOSE HOMERUN AS INDICATED | | CIRCUIT BREAK |
| | THERMOSTAT | | CHIME |
| | BUZZER | | BELL |
| | | | PUSH BUTTON |
| EP | SUBSCRIPT "EP" APPLIED TO ANY SYMBOL INDICATES EXPLOSION PROOF CLASS, GROUP & DIVISION AS NOTED | RT | SUBSCRIPT "RT" APPLIED TO ANY SYMBOL INDICATES RAINTIGHT NEMA 3R OR EQUIVALENT |
| WP | SUBSCRIPT "WP" APPLIED TO ANY SYMBOL INDICATES WEATHERPROOF NEMA TYPE 4 OR EQUIVALENT | PD | SUBSCRIPT "PD" ADDED TO ANY FLOOR OUTLET INDICATES PEDESTAL MOUNTED |
| E | SUBSCRIPT "E" ADDED TO ANY SYMBOL INDICATES EXISTING | P | SUBSCRIPT "P" ADDED TO ANY SYMBOL INDICATES PILOT LIGHT |
| K | SUBSCRIPT "K" ADDED TO ANY SYMBOL INDICATES KEY OPERATED | DL | SUBSCRIPT "DL" ADDED TO ANY SYMBOL INDICATES DAMP LOCATION |

# LIGHTING FIXTURE SCHEDULE

| FIXT # | MANUFACTURER | CATALOG NO. (NOTE 2) | LAMP DATA QTY. | LAMP DATA SIZE | LAMP DATA TYPE NOTE 3 | VOLTAGE | MOUNTING SURF. | MOUNTING FLUSH | MOUNTING CLG. | MOUNTING WALL | MOUNTING HEIGHT | DESCRIPTION | REMARKS |
|---|---|---|---|---|---|---|---|---|---|---|---|---|---|
| 1 | LITHONIA, NOTE 1 | 2AV G 3 32 MDR MVOLT GEB | 3 | F32/T8/3500K | F | 120 | | X | X | | -- | 2x4 DIRECT/INDIRECT | |
| 2 | LITHONIA, NOTE 1 | 2SP8 G 4 32 A12125 120 GEB | 4 | F32/T8/3500K | F | 120 | | X | X | | -- | 2x4 4L ACRYLIC | |
| 3 | LITHONIA, NOTE 1 | DMSW 2 32 ARDP MVOLT GEB | 2 | F32/T8/3500K | F | 120 | X | | X | | -- | NDUSTRIAL WET LOCATION | |
| 4 | LITHONIA, NOTE 1 | AF 2/26DTT 6AR 120 GEB | 2 | 26W DTT/3000K | CF | 120 | | X | X | | -- | 6" DOWN LIGHT | |
| 4E | LITHONIA, NOTE 1 | AF 2/26DTT 6AR 120 GEB EL | 2 | 26W DTT/3000K | CF | 120 | | X | X | | -- | 6" DOWN LIGHT | W/ EMERG. BATTERY |
| 5 | LITHONIA, NOTE 1 | AF10 2 32 120 GEB | 2 | F32/T8/3500K | F | 120 | X | | X | | -- | 4' INDUSTRIAL | NOTE 4 |
| 6 | LITHONIA, NOTE 1 | LE S 1 R 120/277 EL N | 1 | FURN. W/ FIXT. | LED | 120/277 | X | | | | -- | SINGLE FACE EXIT LT | W/ EMERG. BATTERY |
| 7 | LITHONIA, NOTE 1 | LE S 2 R 120/277 EL N | 2 | FURN. W/ FIXT. | LED | 120/277 | X | | | | -- | DOUBLE FACE EXIT LT | W/ EMERG. BATTERY |
| 8 | LITHONIA, NOTE 1 | ELM2 | 2 | FURN. W/ FIXT. | I | 120/277 | X | | | X | -- | BATTERY LIGHT | |
| 9 | LITHONIA, NOTE 1 | WS 2 32 A12125 120 GEB | 2 | F32/T8/3500K | F | 120/277 | X | | | X | -- | 4' WALL BRACKET | |
| 10 | LITHONIA, NOTE 1 | LGF 2/26DTT 6RW FFL 120 GEB | 2 | 26W DTT/3000K | CF | 120 | | X | X | | -- | SHOWER LIGHT | |
| 11 | LITHONIA, NOTE 1 | LE P 1 R 120/277 SW16 | 1 | FURN. W/ FIXT. | LED | 120 | X | | | | -- | "X-RAY IN-USE" | |
| 12 | ECLIPSE LIGHTING | ME XL1 A TTT42 3K 120 EB BB EL-CFL BK | 1 | 42W TRT/3000K | CF | 120 | X | | | X | -- | DECORATIVE SCONCE | W/ EMERG. BATTERY |
| 13 | LITHONIA, NOTE 1 | AH 70MHC 6AR 120 | 1 | 70W | MH | 120 | | X | X | | -- | 6" H.I.D. DOWN LIGHT | |
| 14 | LITHONIA, NOTE 1 | 2SP8 G 2 32 A12125 120 GEB | 2 | F32/T8/3500K | F | 120 | | X | X | | -- | 2x4 2L ACRYLIC | |
| 15 | LITHONIA, NOTE 1 | N2S 25 120 GEB | 1 | F25/T8/3500K | F | 120 | X | | | | -- | 3' TASK LIGHT | |
| 16 | LITHONIA, NOTE 1 | AF 2/26DTT 6AR 120 ADEZ | 2 | 26W DTT/3000K | CF | 120 | | X | X | | -- | 6" DIM. DOWN LIGHT | |
| 17 | TECH LIGHTING | 700 FJ CON W S | 1 | 50W | MR16 | 120 | X | | X | | -- | DECORATIVE PENDANT | |
| 18 | LITHONIA, NOTE 1 | SP8 F 2 32 A12125 120 GEB | 2 | F32/T8/3500K | F | 120 | | X | X | | -- | 1x4 2L ACRYLIC | |

NOTES:

1. FIXTURE SHALL BE CONSIDERED EQUAL AS MANUFACTURED BY COLUMBIA, COOPER AND INFINITY/WILLIAMS.
2. CONTRACTOR SHALL VERIFY LIGHT FIXTURE CATALOG NUMBER & INSTALLATION REQUIREMENTS PRIOR TO ORDERING.
3. LAMP TYPE DESCRIPTION: F=FLUORESCENT, CF=COMPACT FLUORESCENT, I=INCANDESCENT, MH= METAL HALIDE, HPS=HIGH PRESSURE SODIUM, MV=MERCURY VAPOR, LED=LIGHT EMITTING DIODE
4. PROVIDE WITH POLYCARBONATE LAMP JACKETS.

# ESTIMATED MAX. DEMAND

| LOAD | CONN. (VA) | D.F. | EMD (VA) |
|---|---|---|---|
| LIGHTING | 10,500 | 1.0 | 10,500 |
| RECEPTACLES | 19,320 | 1.0 | 19,320 |
| HVAC | 26,950 | 1.0 | 26,950 |
| ELECTRIC HEAT | 45,000 | 1.0 | 45,000 |
| MISCELLANEOUS | 10,000 | 1.0 | 10,000 |
| | | | |
| | | | |
| TOTAL | 111,770 | | 111,770 |

REQUIRED SERVICE: 600 AMPS AT 208/120 VOLTS, 3 PHASE, 4 WIRE

# FEEDER SCHEDULE

| MARK | WIRE AND CONDUIT |
|---|---|
| (100-2T) | 2-#2, #6 G - 1-1/4"C. |
| (200-4) | 4-#3/0, #6 G - 2-1/2"C. |
| (225-2) | 2-#4/0, #4 G - 2"C. |
| (600-4S) | 4-400 KCMIL IN EACH OF (2) 3"C. |

FLAG NOTES

1. SERVICE RATED SURGE SUPPRESSOR - JOSLYN CATALOG NO 1455-40, 208Y/120V, 3ø, 4W WITH INDICATOR LIGHTS. INSTALL IN ACCORDANCE WITH MANUFACTURER'S RECOMMENDATIONS. CONNECT TO A 60/3 BREAKER USING 4-#6, #6 GND IN 1" PVC CONDUIT. CONDUCTORS SHALL BE AS SHORT AS POSSIBLE WITH A MINIMUM NUMBER OF BENDS.
2. PROVIDE #3/0 COPPER IN 1" PVC CONDUIT TO 20' OF #3/0 BARE COPPER IN CONCRETE FOOTING.
3. PROVIDE #3/0 COPPER IN 1" PVC CONDUIT TO STREET SIDE OF WATER METER. PROVIDE BONDING JUMPER ACROSS WATER METER.
4. PROVIDE #3/0 COPPER IN 1" PVC CONDUIT TO BUILDING STEEL.

# CONTACTOR SCHEDULE

| NAME | ELEC. HELD | MECH. HELD 2 WIRE CONTROL | MECH. HELD 3 WIRE CONTROL | AMPS | POLES | CIRCUITS CONTROLLED | CONTROLLED BY | NAMEPLATE | REMARKS |
|---|---|---|---|---|---|---|---|---|---|
| B1 | | X | | 30 | 4 | B-11 | TIMECLOCK "TC1" AND PHOTOCELL | BUILDING LIGHTING | NOTES: 1,2 |
| S1 | | X | | 30 | 4 | B-39 (20/2) | TIMECLOCK "TC1" AND PHOTOCELL | SITE LIGHTING | NOTES: 1,2 |

NOTES:

1. MOUNT WITHIN NEMA 1 ENCLOSURE.
2. SEE DETAIL 5/E4.1

# DRY-TYPE TRANSFORMER SCHEDULE

| MARK | TYPE (NOTE 1) | KVA | VOLTAGE PRIMARY | VOLTAGE SECONDARY | MOUNTING | REMARKS |
|---|---|---|---|---|---|---|
| TX | BB | 37.5 | 208 | 240 | HUNG | |

NOTES:

1. TRANSFORMER TYPE DESCRIPTION: GP=GENERAL PURPOSE, BB=BUCK BOOST

# DISTRIBUTION PANEL SCHEDULE

| DESIGNATION | CIRCUIT NUMBER | NAMEPLATE DESIGNATION | ACTIVE | SPARE | FUSE | SPACE | REMARKS |
|---|---|---|---|---|---|---|---|
| MDP<br>• 208Y/120V, 3ø, 4W WITH GROUND BAR<br>• 600 A MAIN BREAKER<br>• BREAKER DISTRIBUTION<br>• 42 K A.I.C.<br>• SERVICE ENTRANCE RATED | 1 | FAN COIL UNIT FC-1 | 70/3 | | | | |
| | 2 | TVSS | 60/3 | | | | |
| | 3 | FAN COIL UNIT FC-2 | 70/3 | | | | |
| | 4 | SPARE | | 100/3 | | | |
| | 5 | PANEL 'A' | 200/3 | | | | |
| | 6 | PANEL 'B' | 200/3 | | | | |
| | 7 | X-RAY | 225/2 | | | | |
| | 8 | SPACE | | | | 250/3 | |

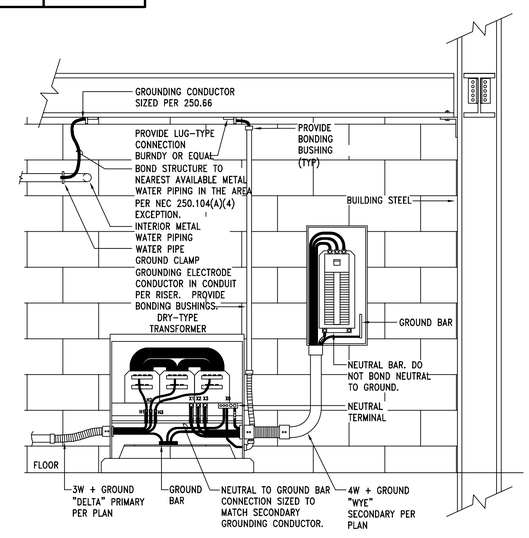


NOTE: PHYSICAL LAYOUT SHOULD BE DETERMINED FROM FLOOR PLAN DRAWINGS AND FIELD DIMENSIONS.

## DRY-TYPE TRANSFORMER GROUNDING DETAIL

2 SCALE: NO SCALE

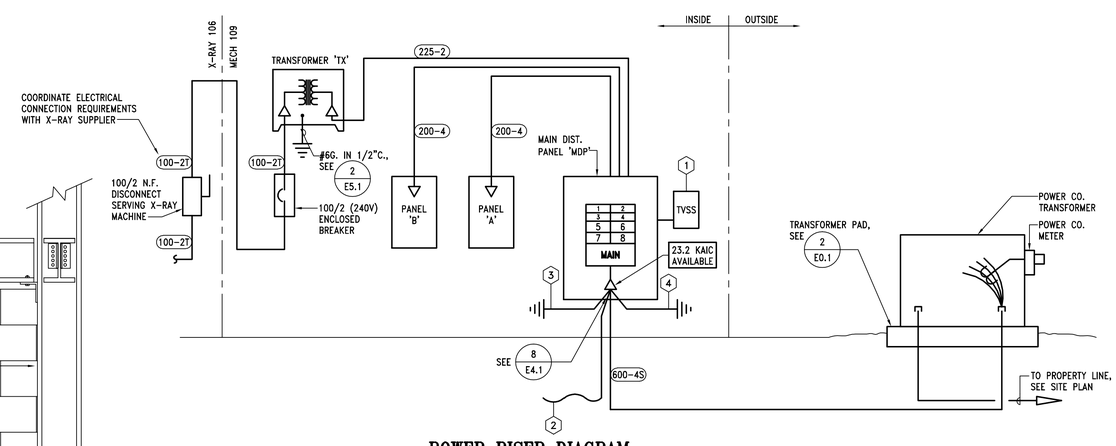


## POWER RISER DIAGRAM

1 SCALE: NO SCALE

Offutt
Air Force Base

APPROVED

| SIGNATURE | OFFICE |
|---|---|

COORDINATION

"SIGNING OF THE COVER SHEET CONSTITUTES COORDINATION OF ALL DRAWINGS IN THIS PROJECT; SUBSEQUENT SHEETS NEED NOT BE SIGNED."

DESIGN FIRM

ARCHITECT
ALLEY POYNER MACCHIETTO ARCHITECTURE, P.C.

MECHANICAL / ELECTRICAL
MORRISSEY ENGINEERING

STRUCTURAL
PERFORMANCE ENGINEERING

CIVIL ENGINEERING
KIRKHAM MICHAEL

The attached electronic document(s) is an instrument of service prepared by Alley Poyner Architecture and is being provided as requested by Offutt Air Force Base. The paper format of these drawings bear the seal(s) of the Registered Professional Architects and Engineers of Record. Due to the easily alterable nature of electronic documents, through either intentional or unintentional means, Alley Poyner Architecture does not make any express or implied warranty for the accuracy or completeness of this information. Hard copies (i.e., prints, paper copies, etc.) shall prevail in any dispute over accuracy or sufficiency of electronic documents.

| Designer | Project Manager |
|---|---|
| SMF | ATM |
| **Drafter** | **Date** |
| SMF | 30-MAY-2008 |

| REVISION | BY/DATE |
|---|---|

SHEET TITLE
E5.1
ELECTRICAL SCHEDULES

SHEET 32 OF 32

PROJECT TITLE
CONSTRUCT VETERINARY CLINIC, B595

Project Number
SGBP-07-0019

| Drawing Number | Facility Number |
|---|---|
| OFF-B-6052 | 595 |

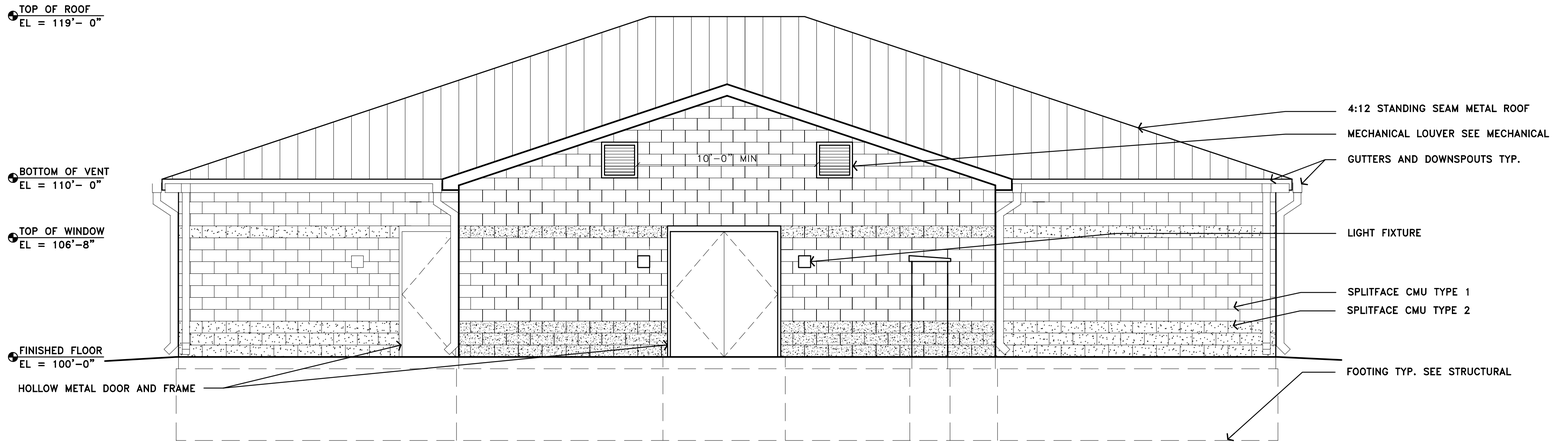


1 EAST ELEVATION
A2.1 SCALE: 1/4" = 1'-0"

2 NORTH ELEVATION
A2.1 SCALE: 1/4" = 1'-0"

Offutt
Air Force Base

APPROVED

| SIGNATURE | OFFICE |
|---|---|
| | |

COORDINATION

"SIGNING OF THE COVER SHEET CONSTITUTES COORDINATION OF ALL DRAWINGS IN THIS PROJECT; SUBSEQUENT SHEETS NEED NOT BE SIGNED."

DESIGN FIRM

ARCHITECT
ALLEY POYNER MACCHIETTO ARCHITECTURE, P.C.

MECHANICAL / ELECTRICAL
MORRISSEY ENGINEERING

STRUCTURAL
PERFORMANCE ENGINEERING

CIVIL ENGINEERING
KIRKHAM MICHAEL

The attached electronic document(s) is an instrument of service prepared by Alley Poyner Architecture and is being provided as requested by Offutt Air Force Base. The paper format of these drawings bear the seal(s) of the Registered Professional Architects and Engineers of Record. Due to the easily alterable nature of electronic documents, through either intentional or unintentional means, Alley Poyner Architecture does not make any express or implied warranty for the accuracy or completeness of this information. Hard copies (i.e., prints, paper copies, etc.) shall prevail in any dispute over accuracy or sufficiency of electronic documents.

| Designer | Project Manager |
|---|---|
| JRS | ATM |
| **Drafter** | **Date** |
| JRS | 30-MAY-2008 |

| REVISION | BY/DATE |
|---|---|
| | |

SHEET TITLE
A2.1
ELEVATIONS

| SHEET | OF |
|---|---|
| 10 | 32 |

PROJECT TITLE
CONSTRUCT VETERINARY CLINIC, B595

Project Number
SGBP-07-0019

| Drawing Number | Facility Number |
|---|---|
| OFF-B-6052 | 595 |

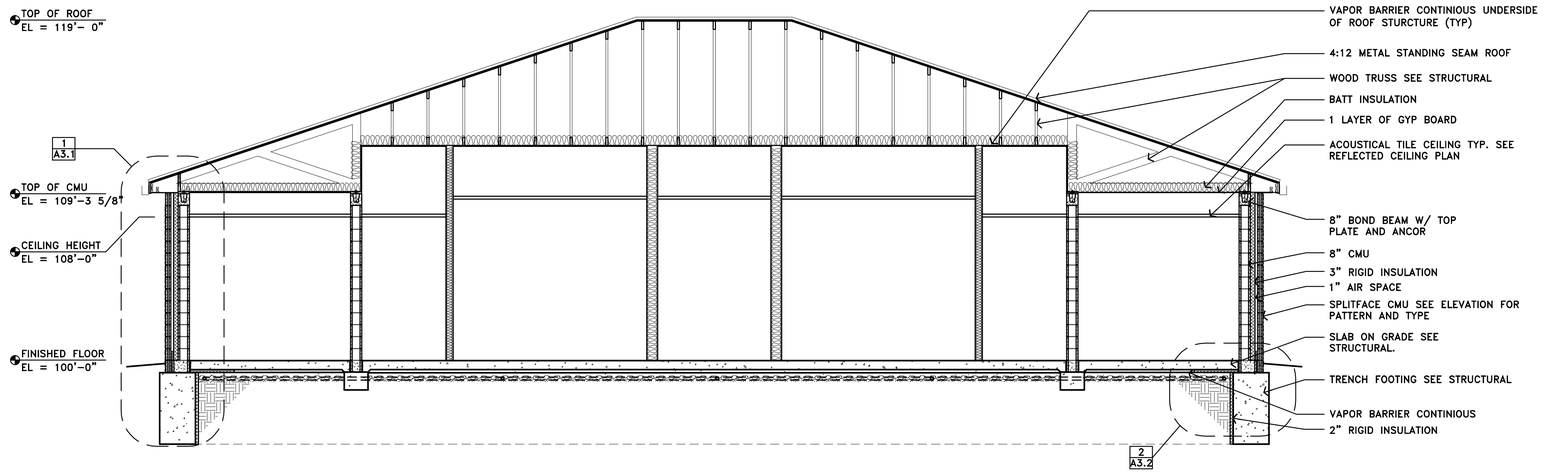


1 A3.0 SECTION
SCALE: 1/4" = 1'-0"

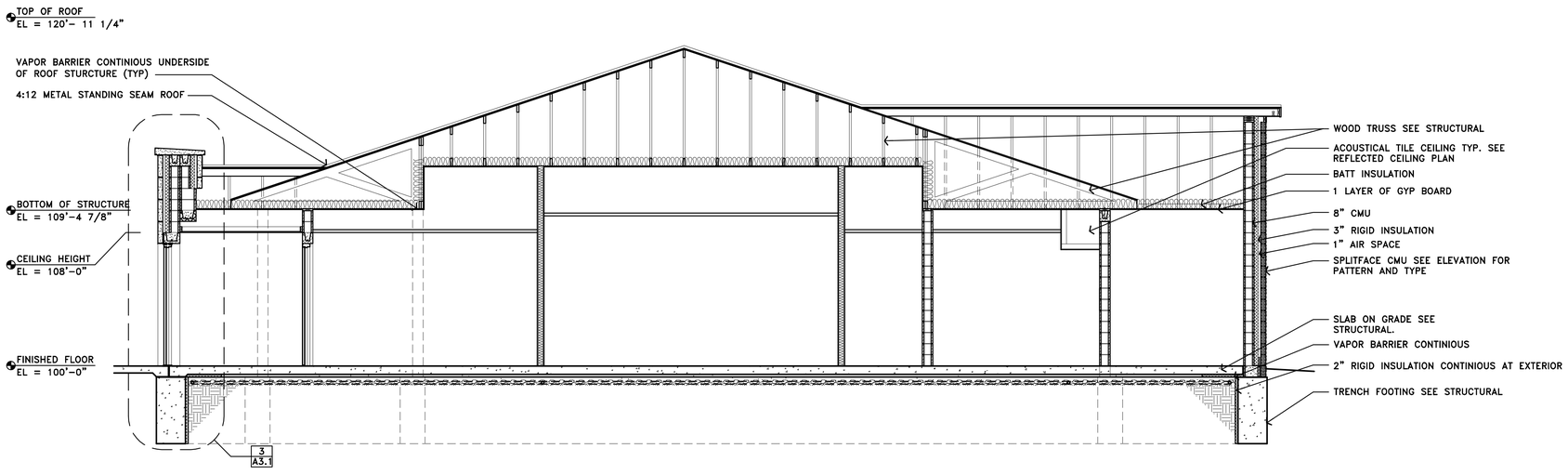


2 A3.0 SECTION
SCALE: 1/4" = 1'-0"

Offutt
Air Force Base

APPROVED

| SIGNATURE | OFFICE |
|---|---|
| | |

COORDINATION

"SIGNING OF THE COVER SHEET CONSTITUTES COORDINATION OF ALL DRAWINGS IN THIS PROJECT; SUBSEQUENT SHEETS NEED NOT BE SIGNED."

DESIGN FIRM

ARCHITECT
ALLEY POYNER MACCHIETTO ARCHITECTURE, P.C.

MECHANICAL / ELECTRICAL
MORRISSEY ENGINEERING

STRUCTURAL
PERFORMANCE ENGINEERING

CIVIL ENGINEERING
KIRKHAM MICHAEL

The attached electronic document(s) is an instrument of service prepared by Alley Poyner Architecture and is being provided as requested by Offutt Air Force Base. The paper format of these drawings bear the seal(s) of the Registered Professional Architects and Engineers of Record. Due to the easily alterable nature of electronic documents, through either intentional or unintentional means, Alley Poyner Architecture does not make any express or implied warranty for the accuracy or completeness of this information. Hard copies (i.e., prints, paper copies, etc.) shall prevail in any dispute over accuracy or sufficiency of electronic documents.

| Designer | Project Manager |
|---|---|
| JRS | ATM |
| Drafter | Date |
| JRS | 30-MAY-2008 |

| REVISION | BY/DATE |
|---|---|
| | |

SHEET TITLE
A3.0
BUILDING SECTIONS

| SHEET | OF |
|---|---|
| 11 | 32 |

PROJECT TITLE
CONSTRUCT VETERINARY CLINIC, B595

Project Number
SGBP-07-0019

| Drawing Number | Facility Number |
|---|---|
| OFF-B-6052 | 595 |

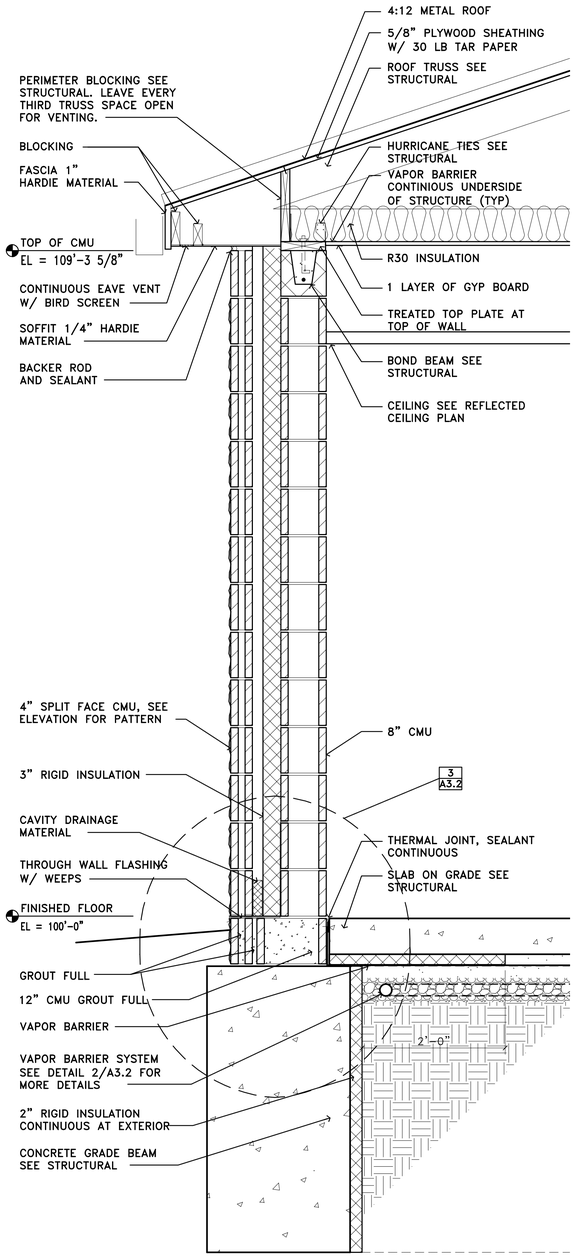


1 WALL SECTION
A3.1 SCALE: 1" = 1'-0"

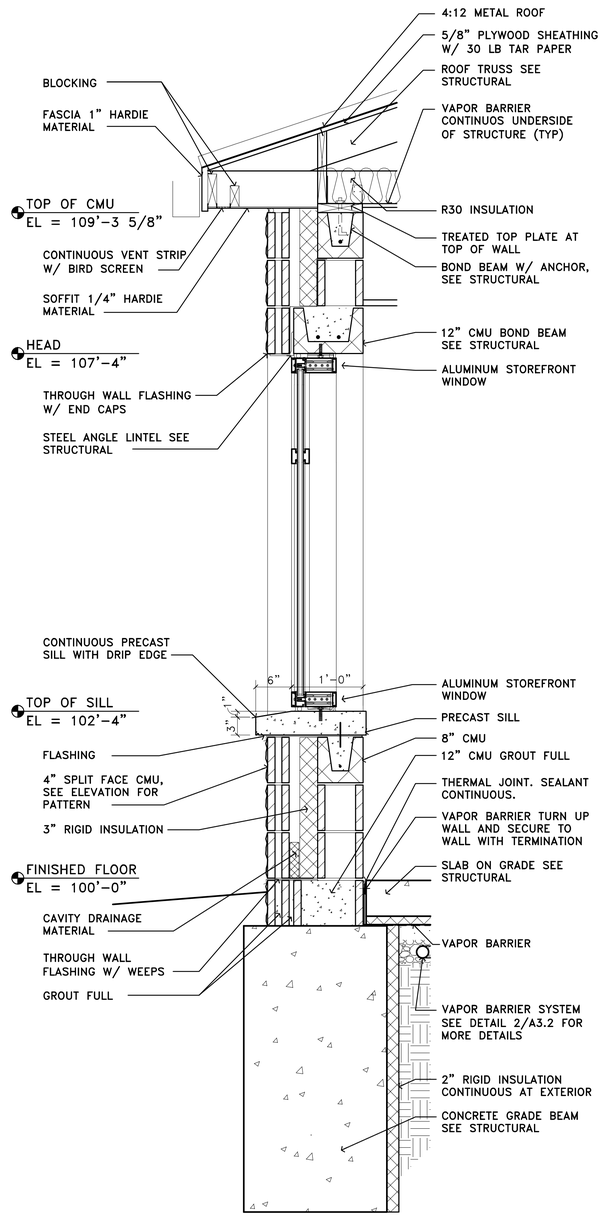


2 WINDOW WALL SECTION
A3.1 SCALE: 1" = 1'-0"

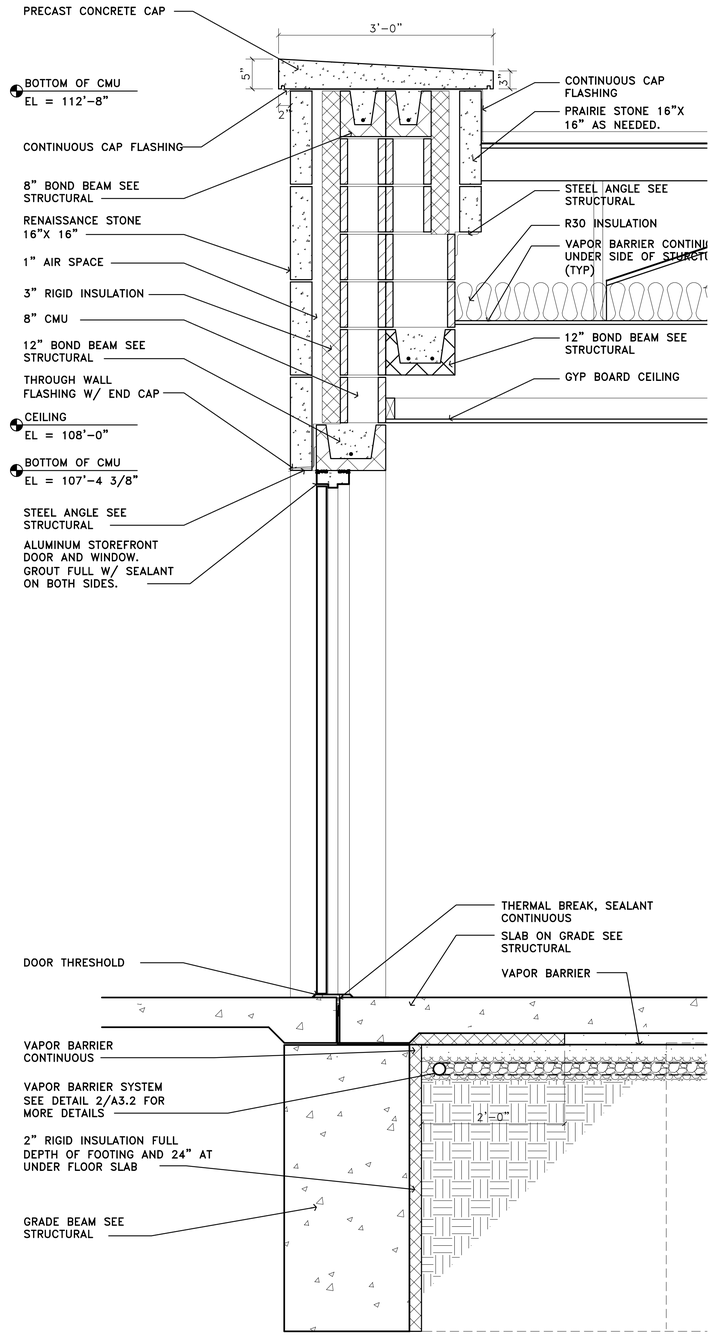


3 ENTRANCE WALL SECTION
A3.1 SCALE: 1" = 1'-0"

Offutt
Air Force Base

APPROVED

| SIGNATURE | OFFICE |
|---|---|
| | |

COORDINATION

"SIGNING OF THE COVER SHEET CONSTITUTES COORDINATION OF ALL DRAWINGS IN THIS PROJECT; SUBSEQUENT SHEETS NEED NOT BE SIGNED."

DESIGN FIRM

ARCHITECT
ALLEY POYNER MACCHIETTO ARCHITECTURE, P.C.

MECHANICAL / ELECTRICAL
MORRISSEY ENGINEERING

STRUCTURAL
PERFORMANCE ENGINEERING

CIVIL ENGINEERING
KIRKHAM MICHAEL

The attached electronic document(s) is an instrument of service prepared by Alley Poyner Architecture and is being provided as requested by Offutt Air Force Base. The paper format of these drawings bear the seal(s) of the Registered Professional Architects and Engineers of Record. Due to the easily alterable nature of electronic documents, through either intentional or unintentional means, Alley Poyner Architecture does not make any express or implied warranty for the accuracy or completeness of this information. Hard copies (i.e., prints, paper copies, etc.) shall prevail in any dispute over accuracy or sufficiency of electronic documents.

| Designer | Project Manager |
|---|---|
| JRS | ATM |
| **Drafter** | **Date** |
| JRS | 30-MAY-2008 |

| REVISION | BY/DATE |
|---|---|
| | |

SHEET TITLE
A3.1
WALL SECTIONS

| SHEET | OF |
|---|---|
| 12 | 32 |

PROJECT TITLE
CONSTRUCT VETERINARY CLINIC, B595

Project Number
SGBP-07-0019

| Drawing Number | Facility Number |
|---|---|
| OFF-B-6052 | 595 |

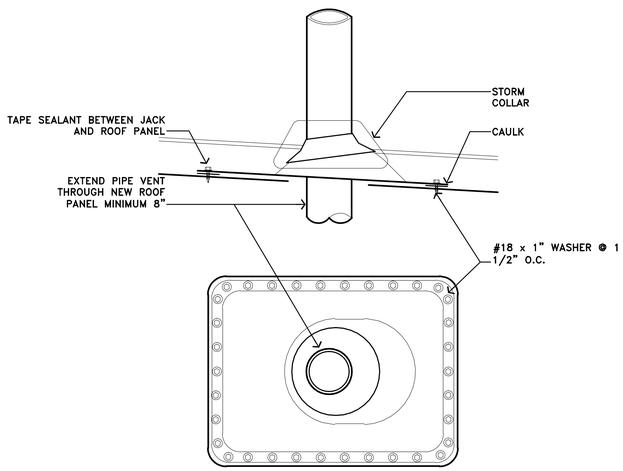


## 1 ROOF PENETRATIONS
A3.2 SCALE:NOT TO SCALE

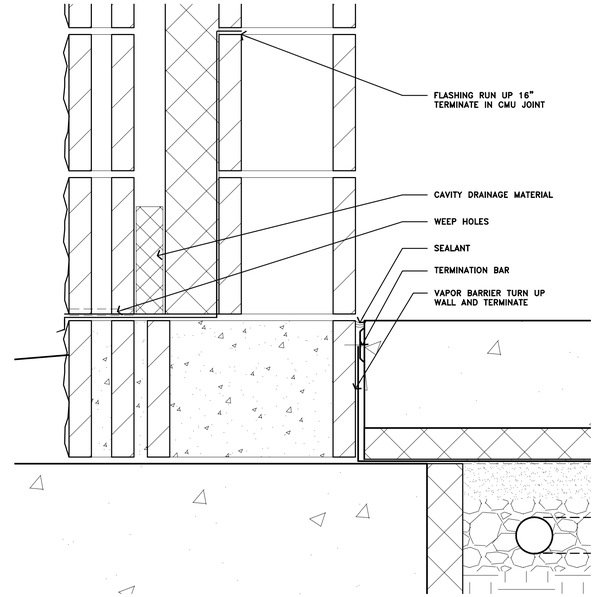


## 1 FLASHING/ VAPOR BARRIER TERMINATION
A3.2 SCALE: 3"=1'-0"

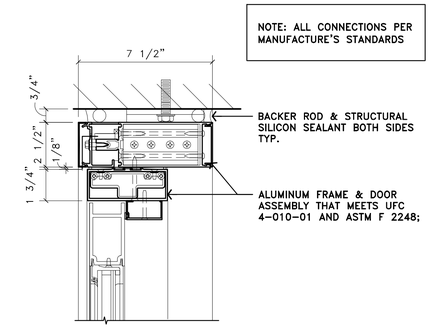


## 4 DOOR HEAD DETAIL
A3.2 SCALE: 3" = 1'-0"

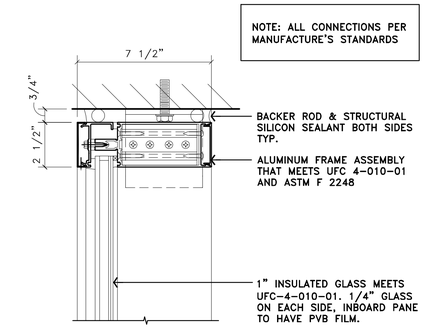


## 8 SIDELIGHT HEAD DETAIL
A3.2 SCALE: 3" = 1'-0"

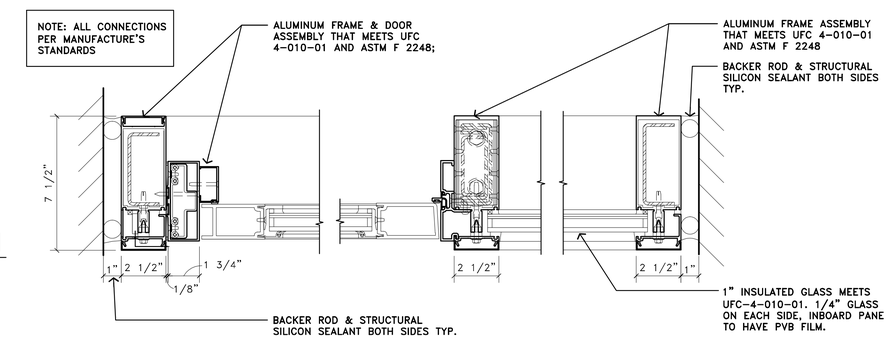


## 5 DOOR/SIDELIGHT JAMB DETAIL
A3.2 SCALE: 3" = 1'-0"

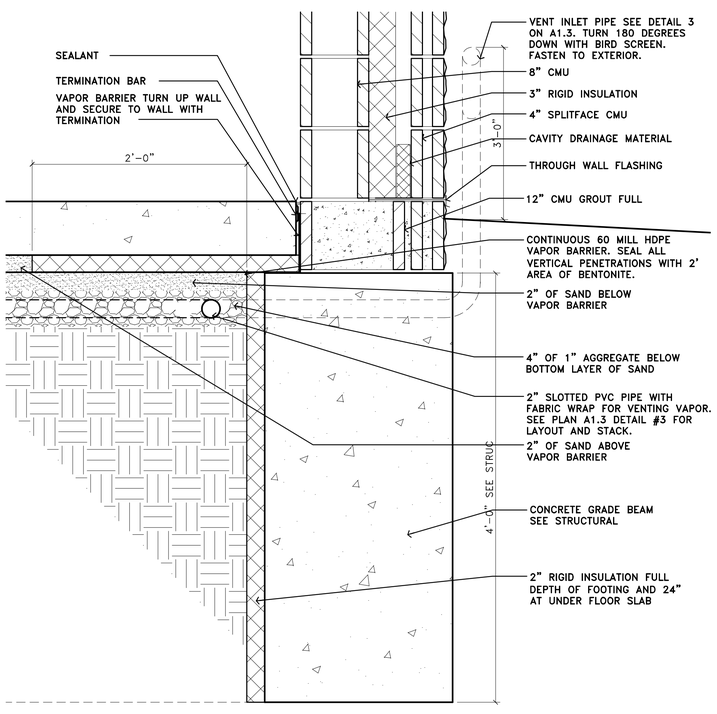


## 2 VAPOR BARRIER DETAIL
A3.2 SCALE: 1 1/2" = 1'-0"

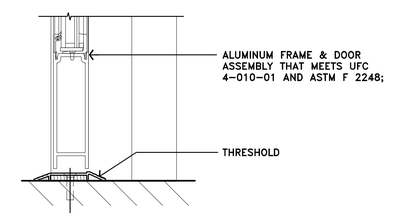


## 6 DOOR SILL DETAIL
A3.2 SCALE: 3" = 1'-0"

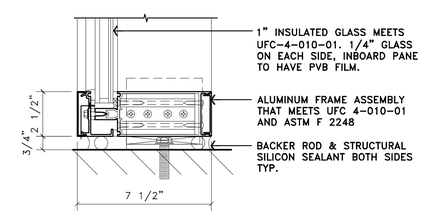


## 9 SIDELIGHT SILL DETAIL
A3.2 SCALE: 3" = 1'-0"

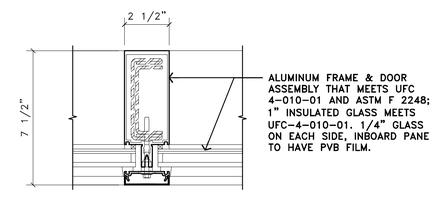


## 7 MULLION DETAIL
A3.2 SCALE: 3" = 1'-0"

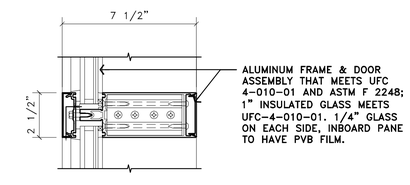


## 10 HORIZONTAL DETAIL
A3.2 SCALE: 3" = 1'-0"

Offutt
Air Force Base

APPROVED

| SIGNATURE | OFFICE |
|---|---|

COORDINATION

"SIGNING OF THE COVER SHEET CONSTITUTES COORDINATION OF ALL DRAWINGS IN THIS PROJECT; SUBSEQUENT SHEETS NEED NOT BE SIGNED."

DESIGN FIRM

ARCHITECT
ALLEY POYNER MACCHIETTO ARCHITECTURE, P.C.

MECHANICAL / ELECTRICAL
MORRISSEY ENGINEERING

STRUCTURAL
PERFORMANCE ENGINEERING

CIVIL ENGINEERING
KIRKHAM MICHAEL

The attached electronic document(s) is an instrument of service prepared by Alley Poyner Architecture and is being provided as requested by Offutt Air Force Base. The paper format of these drawings bear the seal(s) of the Registered Professional Architects and Engineers of Record. Due to the easily alterable nature of electronic documents, through either intentional or unintentional means, Alley Poyner Architecture does not make any express or implied warranty for the accuracy or completeness of this information. Hard copies (i.e., prints, paper copies, etc.) shall prevail in any dispute over accuracy or sufficiency of electronic documents.

| Designer | Project Manager |
|---|---|
| JRS | ATM |
| **Drafter** | **Date** |
| JRS | 30-MAY-2008 |

| REVISION | BY/DATE |
|---|---|

SHEET TITLE
A3.2
DETAILS

| SHEET | OF |
|---|---|
| 13 | 32 |

PROJECT TITLE
CONSTRUCT VETERINARY CLINIC, B595

Project Number
SGBP-07-0019

| Drawing Number | Facility Number |
|---|---|
| OFF-B-6052 | 595 |

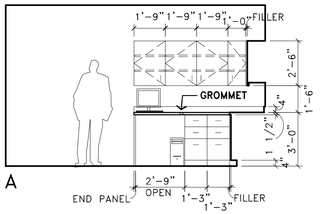


1 EXAM RM 118 (EXAM RM 116 SIM.)
A5.0 SCALE: 1/4" = 1'-0"

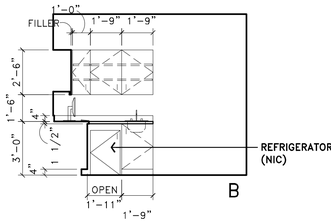


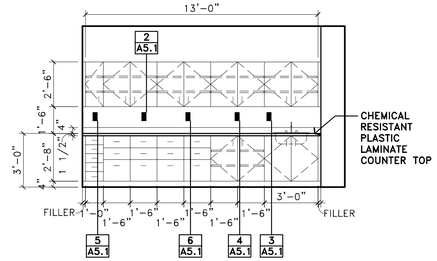


2 SURGERY PREP AND LAB
A5.0 SCALE: 1/4" = 1'-0"

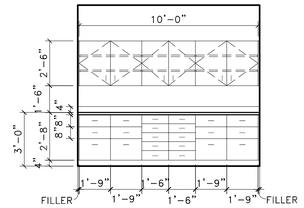


3 SURGERY
A5.0 SCALE: 1/4" = 1'-0"

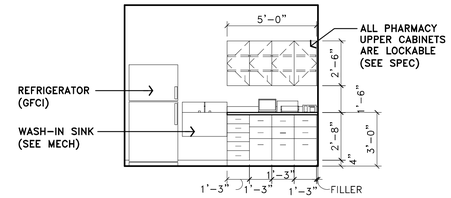


4 PHARMACY
A5.0 SCALE: 1/4" = 1'-0"

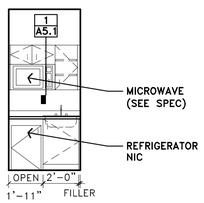


5 BREAK ROOM
A5.0 SCALE: 1/4" = 1'-0"

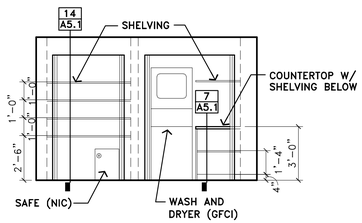


5 LAUNDRY AND STORAGE
A5.0 SCALE: 1/4" = 1'-0"

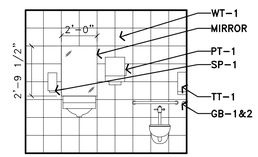


7 RESTROOM TYP.
A5.0 SCALE: 1/4" = 1'-0"

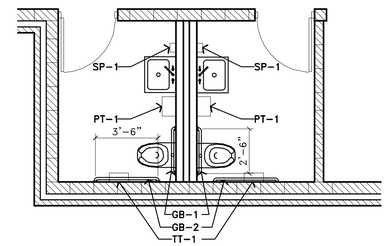


8 RESTROOM ENLARGED PLAN
A5.0 SCALE: 1/4" = 1'-0"

## TOILET ACCESSORIES SCHEDULE

| SEE SPECIFICATION FOR DESCRIPTION | | |
|---|---|---|
| GB-1 | GRAB BAR | |
| GB-2 | GRAB BAR | |
| PT-1 | PAPER TOWEL DISPENSER | NIC |
| SP-1 | SOAP DISPENSER | NIC |
| TT-1 | TOILET TISSUE DISPENSER | NIC |
| NIC ACCESSORIES CONTRACTOR TO COORDINATE LOCATION AND REQUIRMENTS | | |

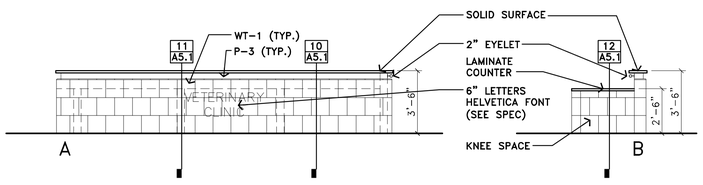


9 RECEPTION DESK
A5.0 SCALE: 1/4" = 1'-0"

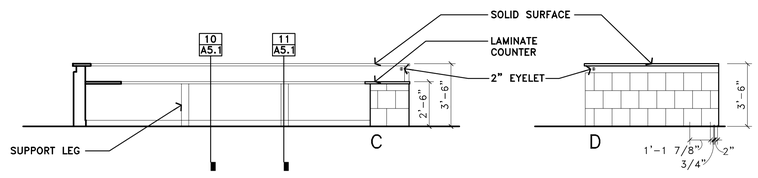


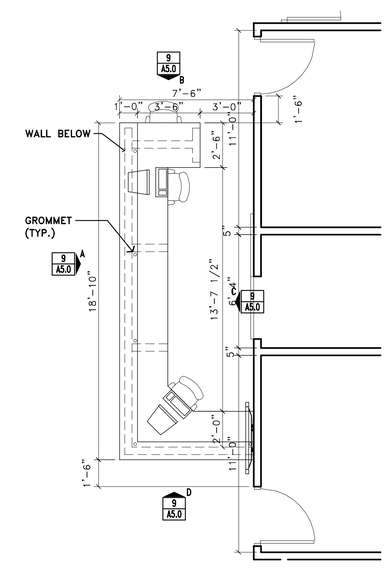


10 RECEPTION DESK ENLARGED PLAN
A5.0 SCALE: 1/4" = 1'-0"

Offutt
Air Force Base

APPROVED

| SIGNATURE | OFFICE |
|---|---|
| | |

COORDINATION

"SIGNING OF THE COVER SHEET CONSTITUTES COORDINATION OF ALL DRAWINGS IN THIS PROJECT; SUBSEQUENT SHEETS NEED NOT BE SIGNED."

DESIGN FIRM

ARCHITECT
ALLEY POYNER MACCHIETTO ARCHITECTURE, P.C.

MECHANICAL / ELECTRICAL
MORRISSEY ENGINEERING

STRUCTURAL
PERFORMANCE ENGINEERING

CIVIL ENGINEERING
KIRKHAM MICHAEL

The attached electronic document(s) is an instrument of service prepared by Alley Poyner Architecture and is being provided as requested by Offutt Air Force Base. The paper format of these drawings bear the seal(s) of the Registered Professional Architects and Engineers of Record. Due to the easily alterable nature of electronic documents, through either intentional or unintentional means, Alley Poyner Architecture does not make any express or implied warranty for the accuracy or completeness of this information. Hard copies (i.e., prints, paper copies, etc.) shall prevail in any dispute over accuracy or sufficiency of electronic documents.

| Designer | Project Manager |
|---|---|
| JRS | ATM |
| Drafter | Date |
| JRS | 30-MAY-2008 |

| REVISION | BY/DATE |
|---|---|
| | |

SHEET TITLE
A5.0
INTERIOR ELEVATIONS AND ENLARGED PLANS

| SHEET | OF |
|---|---|
| 14 | 32 |

PROJECT TITLE
CONSTRUCT VETERINARY CLINIC, B595

Project Number
SGBP-07-0019

| Drawing Number | Facility Number |
|---|---|
| OFF-B-6052 | 595 |

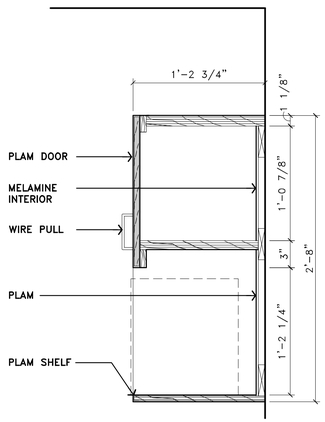


1 A5.1 WALL CABINET
SCALE: 1 1/2" = 1'-0"

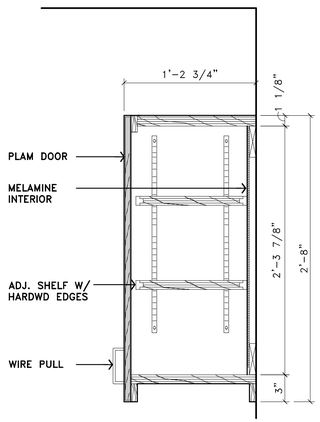


2 A5.1 TYP WALL CABINET
SCALE: 1 1/2" = 1'-0"

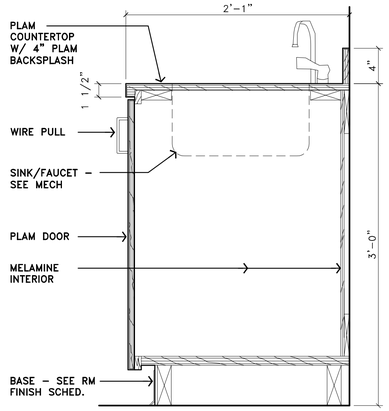


3 A5.1 SINK BASE CABINET
SCALE: 1 1/2" = 1'-0"

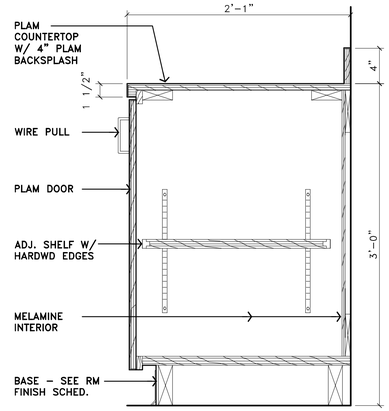


4 A5.1 TYP. BASE CABINET
SCALE: 1 1/2" = 1'-0"

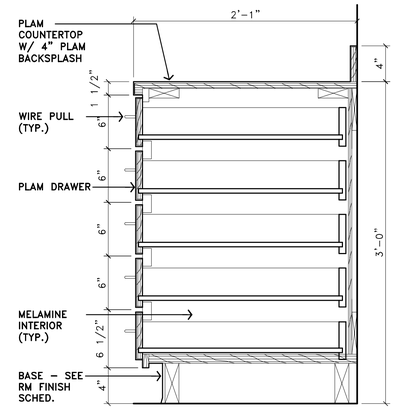


5 A5.1 5 DRAWER BASE CABINET
SCALE: 1 1/2" = 1'-0"

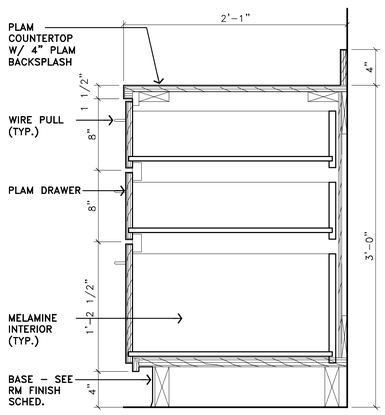


6 A5.1 3 DRAWER BASE CABINET
SCALE: 1 1/2" = 1'-0"

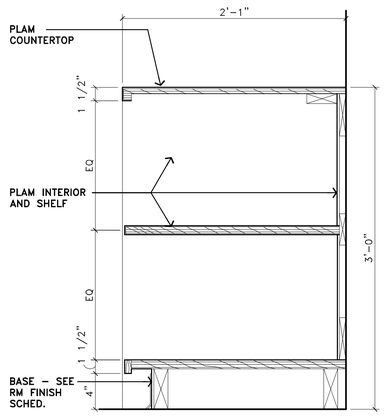


7 A5.1 OPEN SHELF CABINET DTL
SCALE: 1 1/2" = 1'-0"

8 A5.1 NOT USED
SCALE: 1 1/2" = 1'-0"

GENERAL NOTE:
PROVIDE BLOCKING IN WALL BEHIND ALL CABINETS AND SHELVES AS REQUIRED PER SPEC

9 A5.1 NOT USED
SCALE: 1 1/2" = 1'-0"

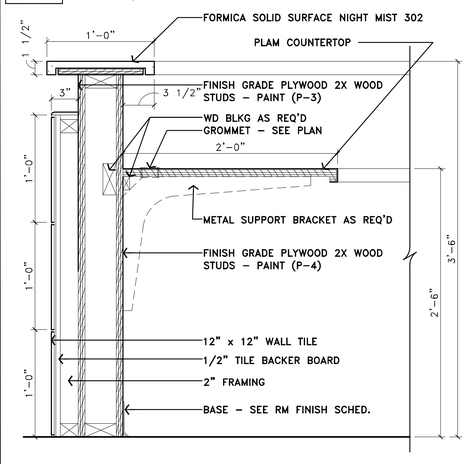


10 A5.1 RECEPTION DESK DETAIL
SCALE: 1 1/2" = 1'-0"

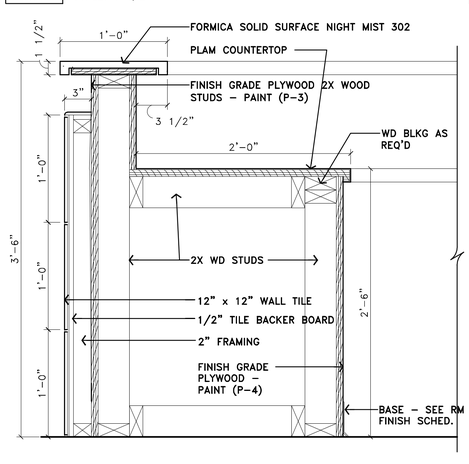


11 A5.1 RECEPTION DESK DETAIL
SCALE: 1 1/2" = 1'-0"

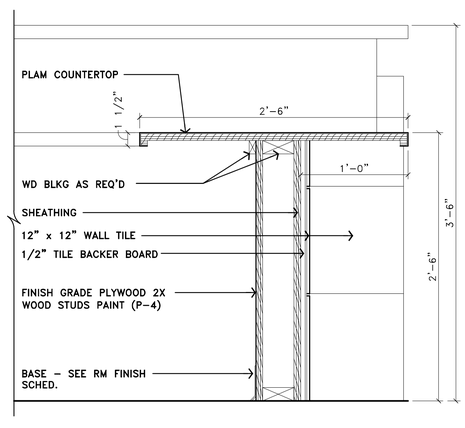


12 A5.1 RECEPTION DESK DETAIL
SCALE: 1 1/2" = 1'-0"

13 A5.1 NOT USED
SCALE: 1 1/2" = 1'-0"

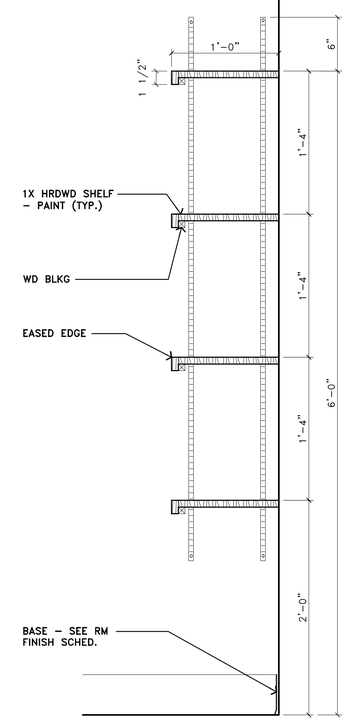


14 A5.1 SHELF DETAIL
SCALE: 1 1/2" = 1'-0"

Offutt
Air Force Base

APPROVED

| SIGNATURE | OFFICE |
|---|---|
| | |

COORDINATION

"SIGNING OF THE COVER SHEET CONSTITUTES COORDINATION OF ALL DRAWINGS IN THIS PROJECT; SUBSEQUENT SHEETS NEED NOT BE SIGNED."

DESIGN FIRM

ARCHITECT
ALLEY POYNER MACCHIETTO ARCHITECTURE, P.C.

MECHANICAL / ELECTRICAL
MORRISSEY ENGINEERING

STRUCTURAL
PERFORMANCE ENGINEERING

CIVIL ENGINEERING
KIRKHAM MICHAEL

The attached electronic document(s) is an instrument of service prepared by Alley Poyner Architecture and is being provided as requested by Offutt Air Force Base. The paper format of these drawings bear the seal(s) of the Registered Professional Architects and Engineers of Record. Due to the easily alterable nature of electronic documents, through either intentional or unintentional means, Alley Poyner Architecture does not make any express or implied warranty for the accuracy or completeness of this information. Hard copies (i.e., prints, paper copies, etc.) shall prevail in any dispute over accuracy or sufficiency of electronic documents.

| Designer | Project Manager |
|---|---|
| JRS | ATM |
| **Drafter** | **Date** |
| JRS | 30-MAY-2008 |

| REVISION | BY/DATE |
|---|---|
| | |

SHEET TITLE
A5.1
DETAILS

| SHEET | OF |
|---|---|
| 15 | 32 |

PROJECT TITLE
CONSTRUCT VETERINARY CLINIC, B595

Project Number
SGBP-07-0019

| Drawing Number | Facility Number |
|---|---|
| OFF-B-6052 | 595 |

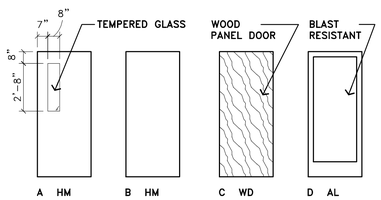


## 1 DOOR TYPES
A6.0 SCALE:1/4" = 1'-0"

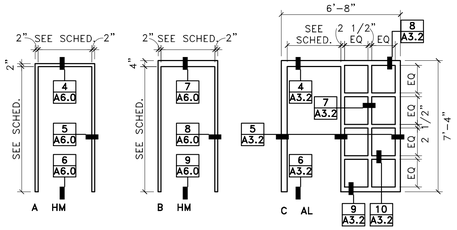


## 2 DOOR FRAMES
A6.0 SCALE:1/4" = 1'-0"

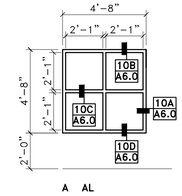


## 3 WINDOW TYPES
A6.0 SCALE:1/4" = 1'-0"

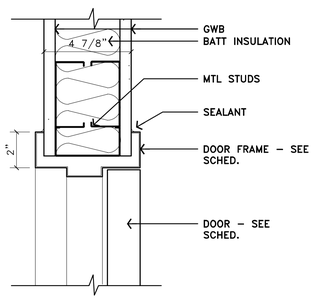


## 4 HEAD DETAIL
A6.0 SCALE: 3" = 1'-0"

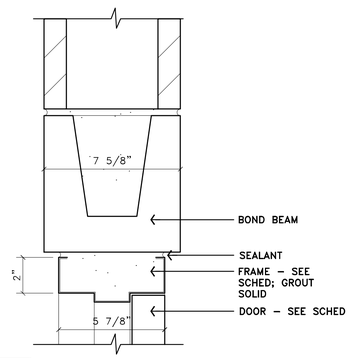


## 7 HEAD DETAIL
A6.0 SCALE: 3" = 1'-0"

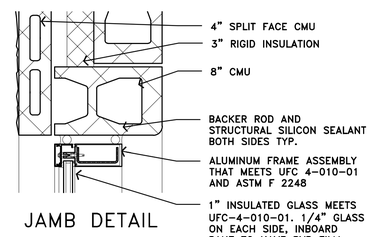


## A. JAMB DETAIL

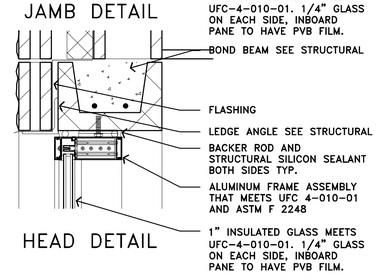


## B. HEAD DETAIL

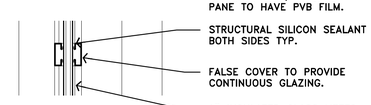


## C. MULLION DETAIL

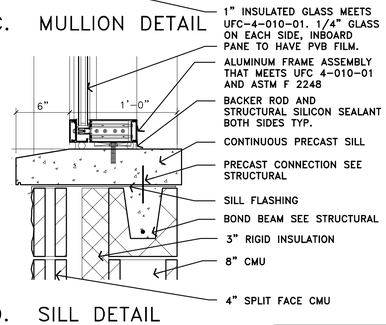


## D. SILL DETAIL

## 10 WINDOW DETAIL
A6.0 SCALE: 1 1/2" = 1'-0"

NOTE: ALL CONNECTIONS PER MANUFACTURE'S STANDARDS

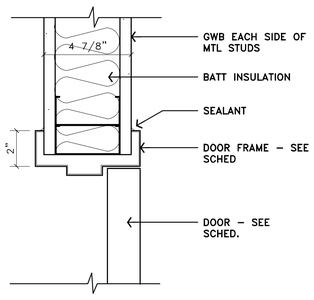


## 5 JAMB DETAIL
A6.0 SCALE: 3" = 1'-0"

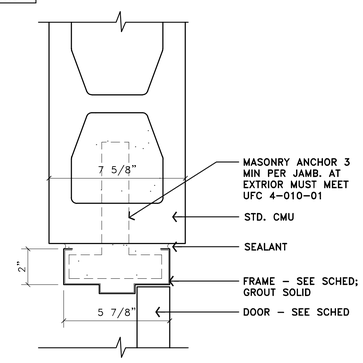


## 8 JAMB DETAIL
A6.0 SCALE: 3" = 1'-0"

## SIGNAGE SCHEDULE

| ROOM NUMBER | DOOR NUMBER | SIGN TYPE | INSERT PANEL | RAISED NUMBERS | REMARKS |
|---|---|---|---|---|---|
| 103 | 103 | BB2 | COMMUNICATION CLOSET | TBD | |
| 104 | 104 | BB2 | NCOIC3 (NAME) | TBD | |
| 105 | 105 | BB2 | DIRECTOR (NAME) | TBD | |
| 106 | 106 | BB2 | X-RAY ROOM | TBD | |
| 107 | 108 | BB2 | JANITOR CLOSET | TBD | |
| 108 | 111 | BB2 | SURGERY PREPARATION AND LAB ROOM | TBD | |
| 109 | 112 | BB2 | SURGERY ROOM | TBD | |
| 100 | 116 | BB2 | EXAM ROOM #1 | TBD | |
| 101 | 118 | BB2 | EXAM ROOM #2 | TBD | |
| 102 | 119 | BB7 | RESTROOM | TBD | |
| 112 | 120 | BB7 | RESTROOM | TBD | |
| 111 | 123 | BB2 | HOLDING | TBD | |
| 110 | 124 | BB2 | KENNEL | TBD | |

## ROOM FINISH SCHEDULE

| ROOM # | ROOM NAME | FLOOR | BASE | WALLS | | | | | | | | CEILING | | | REMARKS |
|---|---|---|---|---|---|---|---|---|---|---|---|---|---|---|---|
| | | | | NORTH | | EAST | | SOUTH | | WEST | | | | | |
| | | MAT'L | MAT'L | MATERIAL | FINISH | MATERIAL | FINISH | MATERIAL | FINISH | MATERIAL | FINISH | MATERIAL | FINISH | HEIGHT | |
| 100 | VESTIBULE | PC-1 | VB-1 | CMU | P-1 | CMU | P-1 | CMU | P-1 | CMU | P-1 | GYP-1 | | 8'-0" | |
| 101 | WAITING | PC-1 | VB-1 | CMU | P-1 | GYP | P-1 | CMU | P-1 | CMU | P-1 | APC-1 | | 9'-0" | |
| 102 | RECEPTION | PC-1 | VB-1 | – | – | GYP | P-3 | – | – | – | – | APC-1 | | 9'-0" | WRAP TO INSIDE CORNER |
| 103 | COMM. CLOSET | PC-1 | VB-1 | CMU | P-1 | GYP | P-2 | CMU | P-1 | CMU | P-1 | APC-1 | | 8'-0" | |
| 104 | NCOIC | PC-1 | VB-1 | CMU | P-1 | GYP | P-2 | CMU | P-1 | GYP | P-2 | APC-1 | | 8'-0" | |
| 105 | DIRECTOR | PC-1 | VB-1 | CMU | P-1 | CMU | P-2 | CMU | P-1 | GYP | P-2 | APC-1 | | 8'-0" | |
| 106 | X-RAY | PC-1 | VB-1 | CMU | P-1 | CMU | P-1 | CMU | P-1 | CMU | P-1 | APC-1 | | 8'-0" | |
| 107 | LAUNDRY | PC-1 | VB-1 | GYP | P-2 | GYP | P-2 | GYP | P-2 | GYP | P-2 | APC-1 | | 9'-0" | |
| 108 | JANITOR | PC-1 | VB-1 | CMU | P-1 | CMU | P-1 | CMU | P-1 | GYP | P-2 | GYP-1 | | 11'-6" | |
| 109 | MECHANICAL | PC-1 | VB-1 | CMU | P-1 | CMU | P-1 | CMU | P-1 | CMU | P-1 | GYP-1 | | 11'-6" | |
| 111 | SURGERY PREP/ LAB | PC-1 | VB-1 | CMU | P-1 | CMU | P-1 | CMU | P-1 | CMU | P-1 | APC-1 | | 9'-0" | |
| 112 | SURGERY | PC-1 | VB-1 | CMU | P-1 | CMU | P-1 | CMU | P-1 | CMU | P-1 | APC-1 | | 9'-0" | |
| 113 | HALLWAY | PC-1 | VB-1 | CMU | P-1 | GYP | P-2 | GYP | P-3 | GYP | P-2 | APC-1 | | 8'-0" | |
| 113A | HALLWAY | PC-1 | VB-1 | GYP | P-1 | CMU | P-1 | GYP | P-1 | GYP | P-1 | APC-1 | | 8'-0" | |
| 113B | HALLWAY | PC-1 | VB-1 | GYP/CMU | P-3 | GYP | P-2 | CMU | P-1 | GYP | P-2 | APC-1 | | 8'-0" | |
| 114 | PHARMACY | PC-1 | VB-1 | GYP | P-3 | -- | -- | GYP | P-1 | CMU | P-1 | APC-1 | | 9'-0" | |
| 115 | STORAGE | PC-1 | VB-1 | GYP | P-1 | -- | -- | GYP | P-1 | CMU | P-1 | APC-1 | | 9'-0" | |
| 116 | EXAM ROOM | PC-1 | VB-1 | GYP | P-2 | GYP | P-2 | GYP | P-2 | GYP | P-2 | APC-1 | | 9'-0" | |
| 117 | BREAK/ WORK | PC-1 | VB-1 | GYP | P-2 | GYP | P-2 | GYP | P-2 | GYP | P-2 | APC-1 | | 9'-0" | |
| 118 | EXAM ROOM | PC-1 | VB-1 | GYP | P-2 | GYP | P-2 | GYP | P-2 | GYP | P-2 | APC-1 | | 9'-0" | |
| 119 | TOILET | PC-1 | VB-1 | CMU | P-1 | GYP | WT-1 | CMU | P-1 | CMU | P-1 | APC-1 | | 8'-0" | |
| 120 | TOILET | PC-1 | VB-1 | CMU | P-1 | CMU | P-1 | CMU | P-1 | GYP | WT-1 | APC-1 | | 8'-0" | |
| 123 | HOLDING | PC-1 | VB-1 | CMU | P-1 | CMU | P-1 | CMU | P-1 | CMU | P-1 | GYP-1 | P-2 | 9'-2" | |
| 124 | KENNEL | PC-1 | VB-1 | CMU | P-1 | CMU | P-1 | CMU | P-1 | CMU | P-1 | GYP-1 | P-2 | 9'-2" | |
| 125 | VESTIBULE | PC-1 | VB-1 | CMU | P-1 | CMU | P-1 | CMU | P-1 | GYP | P-2 | GYP-1 | | 8'-0" | |

## FINISH LEGEND

| KEY | FINISH | MANUFACTURER | # / STYLE | COLOR | REMARKS |
|---|---|---|---|---|---|
| APC-1 | ACOUSTICAL PANEL CLG | ARMSTRONG | ULTIMATE 1912 BEVELED TEGULAR | WHITE | SEE SPEC |
| P-1 | PAINT | TNEMIC | 13WH | FRENCH VANILLA | |
| P-2 | EPOXY PAINT | ICI | 20YY 53/124 | DESERT CASTLE | |
| P-3 | PAINT | ICI | 90BG 30/073 | SMOKE GRAY | |
| P-4 | PAINT | ICI | 00NN 13/000 | OBSIDIAN GLASS | |
| PC-1 | POLISHED CONCRETE | RETRO PLATE | N.A. | N.A. | SEE SPEC |
| VB-1 | VINYL BASE | JOHNSONITE | 09 | CLAY | SEE SPEC |
| WT-1 | WALL TILE | CROSSVILLE | EC114 | GRAND CANYON | |
| | | | | | |

ALL MANUFACTURES LISTED ARE BASIS OF DESIGN ONLY: ADDITIONAL MANUFACTURES ARE ACCEPTABLE BASED ON PRODUCTS OF EQUAL QUALITY AND APPEARANCE.

## DOOR SCHEDULE

| MARK | FRAME | | | DOOR | | | | | HRDWRE SET # | RATING | DETAILS | | | REMARKS |
|---|---|---|---|---|---|---|---|---|---|---|---|---|---|---|
| | TYPE | MATERIAL | FINISH | QTY. | SIZE | TYPE | MATERIAL | FINISH | | | HEAD | JAMB | SILL | |
| 100A | C | AL | CLR. ANOD | | 3'-0" x 7'-0" x 1 3/4" | D | AL | CLR. ANOD | 01 | | 4/A3.2 | 8/A3.2 | | |
| 100B | C | AL | CLR. ANOD | | 3'-0"' x 7'-0" x 1 3/4" | D | AL | CLR. ANOD | 02 | | 4/A3.2 | 8/A3.2 | | |
| 103 | B | HM | P-2 | | 3'-0" x 7'-0" x 1 3/4" | B | HM | P-2 | 04 | | 7/A6.0 | 8/A6.0 | | |
| 104 | B | HM | P-2 | | 3'-0" x 7'-0" x 1 3/4" | B | HM | P-2 | 03 | | 7/A6.0 | 8/A6.0 | | |
| 105 | B | HM | P-2 | | 3'-0" x 7'-0" x 1 3/4" | B | HM | P-2 | 03 | | 7/A6.0 | 8/A6.0 | | |
| 106 | B | HM | P-2 | | 3'-0" x 7'-0" x 1 3/4" | B | HM | P-2 | 10 | | 7/A6.0 | 8/A6.0 | | |
| 107 | | | | PAIR | 2'-6" x 7'-0" x 1 3/4" | C | WD | P-2 | 12 | | | | | BI-FOLD DOORS |
| 108 | A | HM | P-2 | | 3'-0" x 7'-0" x 1 3/4" | B | HM | P-2 | 07 | | 4/A6.0 | 5/A6.0 | | |
| 109 | B | HM | P-2 | PAIR | 3'-0" x 7'-0" x 1 3/4" | B | HM | P-2 | 15 | | 7/A6.0 | 8/A6.0 | | |
| 112 | B | HM | P-2 | | 3'-0" x 7'-0" x 1 3/4" | A | HM | P-2 | 9 | | 7/A6.0 | 8/A6.0 | | TWO WAY HINGE |
| 113 | A | HM | P-2 | | 3'-0" x 7'-0" x 1 3/4" | B | HM | P-2 | 11 | | 4/A6.0 | 5/A6.0 | | |
| 115 | | | | PAIR | 2'-0" x 7'-0" x 1 3/4" | C | WD | P-2 | 12 | | | | | BI-FOLD DOORS |
| 116A | A | HM | P-2 | | 3'-0" x 7'-0" x 1 3/4" | A | HM | P-2 | 05 | | 4/A6.0 | 5/A6.0 | | |
| 116B | A | HM | P-2 | | 3'-0" x 7'-0" x 1 3/4" | B | HM | P-2 | 05 | | 4/A6.0 | 5/A6.0 | | |
| 117 | -- | -- | -- | | 3'-0" x 7'-0" x 1 3/4" | B | HM | P-2 | 13 | | | | | SLIDING DOOR |
| 118A | A | HM | P-2 | | 3'-0" x 7'-0" x 1 3/4" | A | HM | P-2 | 05 | | 4/A6.0 | 5/A6.0 | | |
| 118B | A | HM | P-2 | | 3'-0" x 7'-0" x 1 3/4" | B | HM | P-2 | 05 | | 4/A6.0 | 5/A6.0 | | |
| 119 | B | HM | P-2 | | 3'-0" x 7'-0" x 1 3/4" | B | HM | P-2 | 06 | | 7/A6.0 | 8/A6.0 | | |
| 120 | B | HM | P-2 | | 3'-0" x 7'-0" x 1 3/4" | B | HM | P-2 | 06 | | 7/A6.0 | 8/A6.0 | | |
| 123 | B | HM | P-2 | | 3'-0" x 7'-0" x 1 3/4" | B | HM | P-2 | 08 | | 7/A6.0 | 8/A6.0 | | |
| 124 | B | HM | P-2 | | 3'-0" x 7'-0" x 1 3/4" | B | HM | P-2 | 08 | | 7/A6.0 | 8/A6.0 | | |
| 125A | B | HM | P-2 | | 3'-0" x 7'-0" x 1 3/4" | B | HM | P-2 | 16 | | 7/A6.0 | 8/A6.0 | | |
| 125B | A | HM | P-2 | | 3'-0" x 7'-0" x 1 3/4" | A | HM | P-2 | 14 | | 4/A6.0 | 5/A6.0 | | |
| | | | | | | | | | | | | | | |

Offutt
Air Force Base

APPROVED

| SIGNATURE | OFFICE |
|---|---|
| | |

COORDINATION

"SIGNING OF THE COVER SHEET CONSTITUTES COORDINATION OF ALL DRAWINGS IN THIS PROJECT; SUBSEQUENT SHEETS NEED NOT BE SIGNED."

DESIGN FIRM

ARCHITECT
ALLEY POYNER MACCHIETTO ARCHITECTURE, P.C.

MECHANICAL / ELECTRICAL
MORRISSEY ENGINEERING

STRUCTURAL
PERFORMANCE ENGINEERING

CIVIL ENGINEERING
KIRKHAM MICHAEL

The attached electronic document(s) is an instrument of service prepared by Alley Poyner Architecture and is being provided as requested by Offutt Air Force Base. The paper format of these drawings bear the seal(s) of the Registered Professional Architects and Engineers of Record. Due to the easily alterable nature of electronic documents, through either intentional or unintentional means, Alley Poyner Architecture does not make any express or implied warranty for the accuracy or completeness of this information. Hard copies (i.e., prints, paper copies, etc.) shall prevail in any dispute over accuracy or sufficiency of electronic documents.

| Designer | Project Manager |
|---|---|
| JRS | ATM |
| Drafter | Date |
| JRS | 30-MAY-2008 |

| REVISION | BY/DATE |
|---|---|
| | |

SHEET TITLE
A6.0
SCHEDULES, WINDOW, DOOR, AND FRAME TYPES

SHEET 16 OF 32

PROJECT TITLE
CONSTRUCT VETERINARY CLINIC, B595

Project Number
SGBP-07-0019

| Drawing Number | Facility Number |
|---|---|
| OFF-B-6052 | 595 |

# CONSTRUCT VETERINARY CLINIC, B-595
# OFFUTT AIR FORCE BASE
# NEBRASKA

## GENERAL NOTE

CONTAMINATED SOIL EXISTS IN THE AREA
SEE REPORT FOR DETAILS

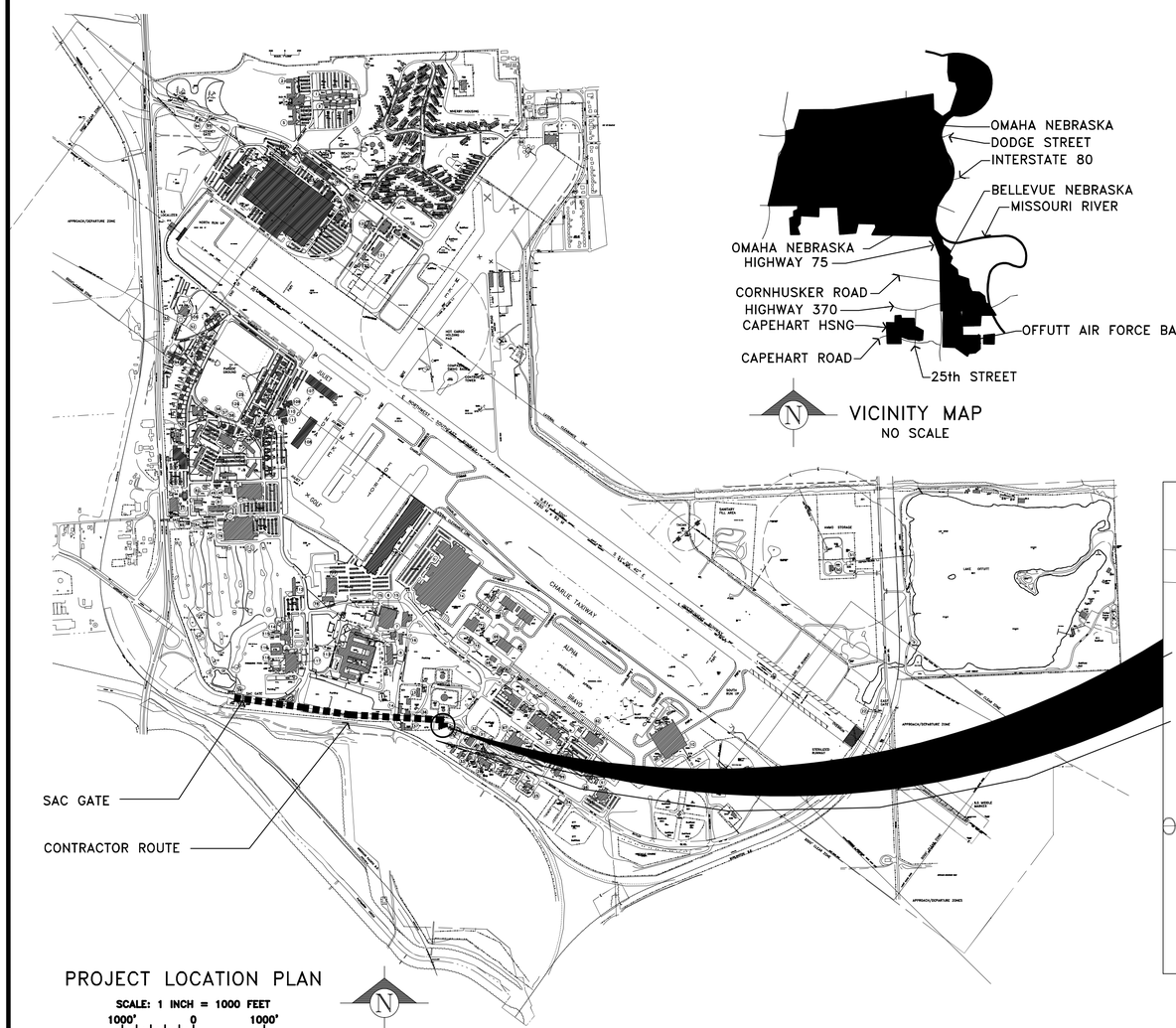





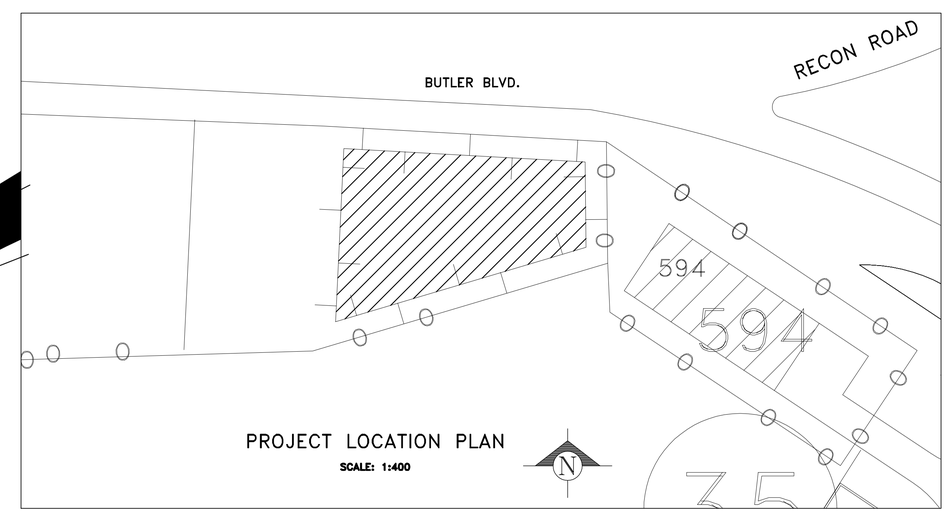


## DRAWING INDEX

| SHEET NO. | SEQUENCE | TOTAL | SHEET TITLE |
|---|---|---|---|
| | | | |
| G1.0 | 1 | 32 | COVER SHEET |
| C1.0 | 2 | 32 | SITE SURVEY AND REMOVALS |
| C2.0 | 3 | 32 | SITE GRADING LAYOUT AND UTILITIES |
| C3.0 | 4 | 32 | CIVIL DETAILS |
| A1.0 | 5 | 32 | GENERAL INFORMATION |
| A1.1 | 6 | 32 | EGRESS PLAN AND CODE SHEET |
| A1.2 | 7 | 32 | FLOOR PLAN, REFLECTED CEILING PLAN AND ENLARGED PLAN |
| A1.3 | 8 | 32 | EQUIPMENT, FURNITURE PLAN, ROOF PLAN, AND VAPOR VENT PLAN |
| A2.0 | 9 | 32 | BUILDING ELEVATION |
| A2.1 | 10 | 32 | BUILDING ELEVATION |
| A3.0 | 11 | 32 | BUILDING SECTIONS |
| A3.1 | 12 | 32 | WALL SECTIONS |
| A3.2 | 13 | 32 | DETAILS |
| A5.0 | 14 | 32 | INTERIOR ELEVATIONS |
| A5.1 | 15 | 32 | DETAILS |
| A6.0 | 16 | 32 | DOOR AND ROOM SCHEDULES, WINDOW, DOOR AND FRAME TYPES |
| S1.1 | 17 | 32 | FOUNDATION PLAN |
| S2.1 | 18 | 32 | ROOF FRAMING PLAN |
| S3.0 | 19 | 32 | GENERAL STRUCTURAL NOTES |
| S3.1 | 20 | 32 | FOUNDATION DETAILS |
| S3.2 | 21 | 32 | FRAMING DETAILS |
| M1.1 | 22 | 32 | FLOOR PLAN HVAC |
| M2.1 | 23 | 32 | FLOOR PLAN PLUMBING |
| M3.1 | 24 | 32 | WAST AND VENT RISER |
| M4.1 | 25 | 32 | MECHANICAL SECTIONS AND DETAILS |
| M5.1 | 26 | 32 | MECHANICAL SCHEDULES |
| E0.1 | 27 | 32 | SITE PLAN ELECTRICAL |
| E1.1 | 28 | 32 | FLOOR PLAN LIGHTING |
| E2.1 | 29 | 32 | FLOOR PLAN POWER |
| E3.1 | 30 | 32 | FLOOR PLAN SPECIAL SYSTEMS |
| E4.1 | 31 | 32 | ELECTRICAL DETAILS |
| E5.1 | 32 | 32 | ELECTRICAL SCHEDULES |

Offutt
Air Force Base

APPROVED

| SIGNATURE | OFFICE |
|---|---|
| | |

COORDINATION

"SIGNING OF THE COVER SHEET CONSTITUTES COORDINATION OF ALL DRAWINGS IN THIS PROJECT; SUBSEQUENT SHEETS NEED NOT BE SIGNED."

DESIGN FIRM

ARCHITECT
ALLEY POYNER MACCHIETTO ARCHITECTURE, P.C.

MECHANICAL / ELECTRICAL
MORRISSEY ENGINEERING

STRUCTURAL
PERFORMANCE ENGINEERING

CIVIL ENGINEERING
KIRKHAM MICHAEL

The attached electronic document(s) is an instrument of service prepared by Alley Poyner Architecture and is being provided as requested by Offutt Air Force Base. The paper format of these drawings bear the seal(s) of the Registered Professional Architects and Engineers of Record. Due to the easily alterable nature of electronic documents, through either intentional or unintentional means, Alley Poyner Architecture does not make any express or implied warranty for the accuracy or completeness of this information. Hard copies (i.e., prints, paper copies, etc.) shall prevail in any dispute over accuracy or sufficiency of electronic documents.

| Designer | Project Manager |
|---|---|
| JRS | ATM |
| **Drafter** | **Date** |
| JRS | 30-MAY-2008 |

| REVISION | BY/DATE |
|---|---|
| | |

SHEET TITLE
G1.0
COVER SHEET

| SHEET | OF |
|---|---|
| 1 | 32 |

PROJECT TITLE
CONSTRUCT VETERINARY CLINIC, B595

Project Number
SGBP-07-0019

| Drawing Number | Facility Number |
|---|---|
| OFF-B-6052 | 595 |

## GENERAL NOTES

1. CIVIL SITE SHEETS 2, 3, AND 4 REFERENCE THE CITY OF OMAHA STANDARD SPECIFICATIONS FOR PUBLIC WORKS CONSTRUCTION 2003, 3RD EDITION, HEREIN REFERRED TO AS THE OMAHA STANDARD SPECIFICATIONS WITH THE FOLLOWING EXCEPTIONS: OMIT THE GENERAL PROVISIONS ARTICLES 1 THRU 10; OMIT ANY SECTIONS RELATED TO MEASUREMENT AND PAYMENT.

2. ALL DIMENSIONS ARE FROM OUTSIDE WALL OF BUILDING OR ARE TO BACK-OF-CURB UNLESS OTHERWISE NOTED. BUILDING FOOTPRINT SHOWN IS OUTSIDE OF MASONRY.

3. CONTRACTOR SHALL BE RESPONSIBLE FOR DUST CONTROL AND EROSION CONTROL. ANY DAMAGE FROM BLOWING DUST OR EROSION AND RUNOFF FROM THE SITE SHALL BE REPAIRED BY THE CONTRACTOR AT NO ADDITIONAL COST TO THE OWNER.

4. THE CONTRACTOR IS RESPONSIBLE FOR PROVIDING CONSTRUCTION STAKING.

5. THE CONTRACTOR IS RESPONSIBLE FOR ALL TRAFFIC CONTROL AND ASSOCIATED SAFETY MEASURES. TWO-WAY TRAFFIC SHALL BE MAINTAINED ON ADJACENT STREETS AT ALL TIMES.

## SURVEY NOTES

1. COORDINATES ARE NEBRASKA STATE PLANE.

2. EXISTING UTILITY LINES (EITHER OVERHEAD OR UNDERGROUND) AND PERMANENT STRUCTURES FOR WHICH THE APPROXIMATE LOCATION IS DESIGNATED ON THE DRAWINGS OR SHOWN TO THE CONTRACTOR OR ENCOUNTERED WHILE CONSTRUCTION IS UNDERWAY SHALL BE KEPT FREE OF DAMAGE BY THE CONTRACTOR'S OPERATIONS. IF SUCH UTILITY OR STRUCTURE IS DAMAGED, IT SHALL BE RESTORED AT THE CONTRACTOR'S EXPENSE. IF ANY UTILITY IS DAMAGED DURING OPERATIONS, THE CONTRACTOR SHALL NOTIFY THE OWNER OF SAID DAMAGED UTILITY AT ONCE.

3. ALL EXISTING UTILITIES SHOWN ARE FROM PUBLIC RECORD AND THEIR LOCATION IS SHOWN HERE FOR THE CONVENIENCE OF THE CONTRACTOR ONLY. THE CONTRACTOR IS RESPONSIBLE FOR VERIFYING EXACT LOCATION AND DEPTH PRIOR TO CONSTRUCTION. THE CONTRACTOR SHALL NOT RELY ON THE CONSTRUCTION DRAWINGS FOR LOCATIONS OF UNDERGROUND FACILITIES. CALL DIGGERS HOTLINE 48 HOURS IN ADVANCE OF EXCAVATION.

4. ALL ELEVATIONS ARE REFERENCED TO OFFUTT CLEAR ZONE DRAINAGE PROJECT (1998), BOOK 1703. COPIES OF FIELDBOOK ARE AVAILABLE AT REQUEST.

## REMOVAL NOTES

1. SAWCUT CONCRETE PAVEMENT TO BE REMOVED TO FULL DEPTH OF PAVEMENT.

2. DISPOSE OF REMOVAL ITEMS IN A LAWFUL MANNER AT AN OFFSITE FACILITY.

3. DAMAGE TO EXISTING FACILITIES THAT REMAIN IN PLACE SHALL BE REPAIRED AT THE CONTRACTOR'S EXPENSE.

4. CLEAR AND GRUB SMALL TREES AND VEGETATION PER SECTION 101 OF THE CITY OF OMAHA STANDARD SPECIFICATIONS.

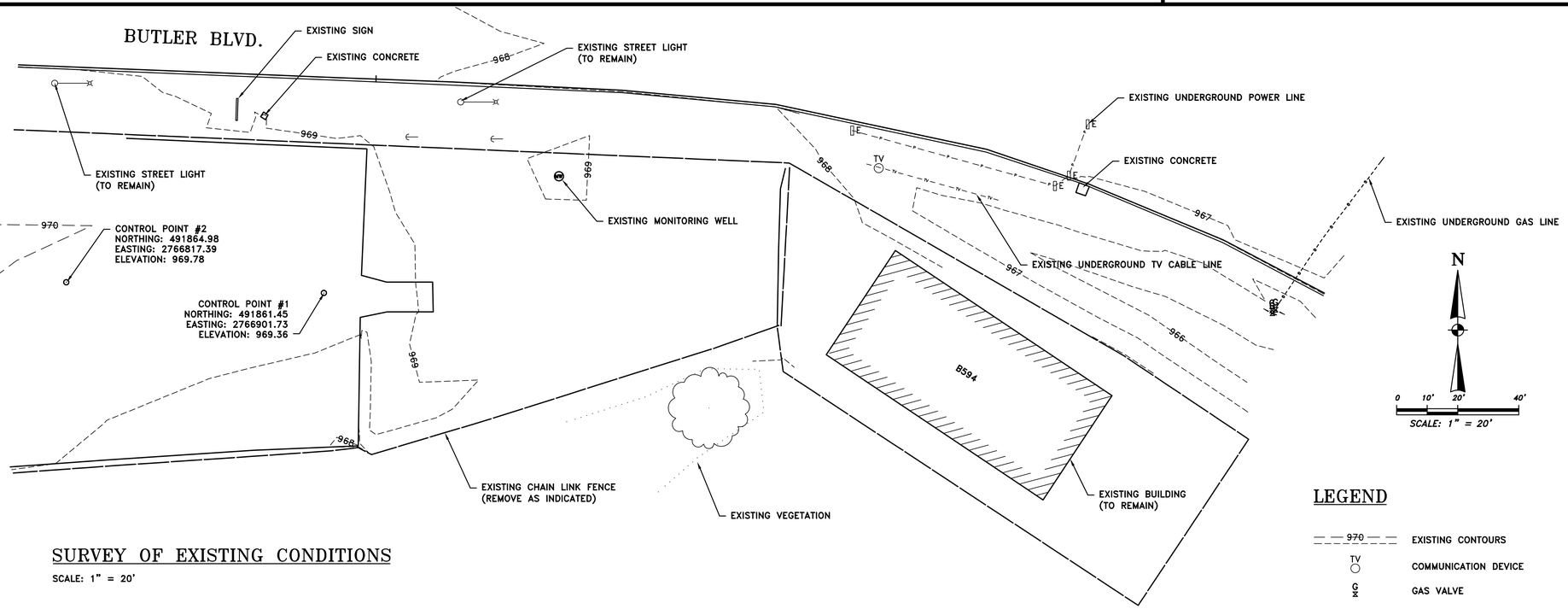


## SURVEY OF EXISTING CONDITIONS

SCALE: 1" = 20'

## LEGEND

| | |
|---|---|
| 970 | EXISTING CONTOURS |
| TV | COMMUNICATION DEVICE |
| GV | GAS VALVE |
| E | ELECTRIC PEDESTAL |

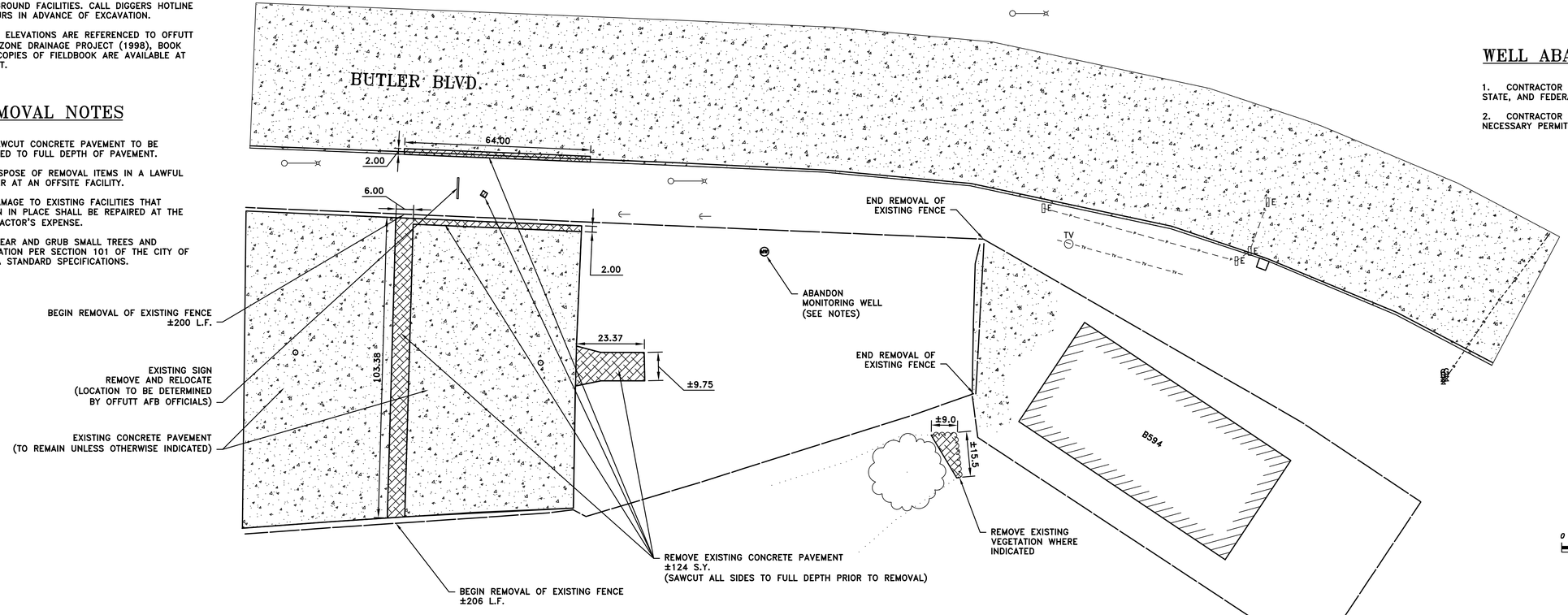


## MAP OF REMOVALS

SCALE: 1" = 20'

## WELL ABANDONMENT NOTES

1. CONTRACTOR SHALL ABANDON WELL PER LOCAL, STATE, AND FEDERAL GUIDELINES.

2. CONTRACTOR SHALL APPLY FOR AND PROVIDE ALL NECESSARY PERMITS.

Offutt Air Force Base

APPROVED

| SIGNATURE | OFFICE |
|---|---|

COORDINATION

"SIGNING OF THE COVER SHEET CONSTITUTES COORDINATION OF ALL DRAWINGS IN THIS PROJECT; SUBSEQUENT SHEETS NEED NOT BE SIGNED."

DESIGN FIRM

ARCHITECT
ALLEY POYNER MACCHIETTO ARCHITECTURE, P.C.

MECHANICAL / ELECTRICAL
MORRISSEY ENGINEERING

STRUCTURAL
PERFORMANCE ENGINEERING

CIVIL ENGINEERING
KIRKHAM MICHAEL

PROFESSIONAL CIVIL ENGINEER
JAY B. FALLICK
E-11635
STATE OF NEBRASKA

| Designer | Project Manager |
|---|---|
| JBF | ATM |
| Drafter | Date |
| LTH | 27-JUNE-2008 |

| REVISION | BY/DATE |
|---|---|

SHEET TITLE
C1.0
SITE SURVEY AND REMOVALS

SHEET 2 OF 32

PROJECT TITLE
CONSTRUCT VETERINARY CLINIC, B595

Project Number
SGBP-07-0019

| Drawing Number | Facility Number |
|---|---|
| OFF-B-6052 | 595 |

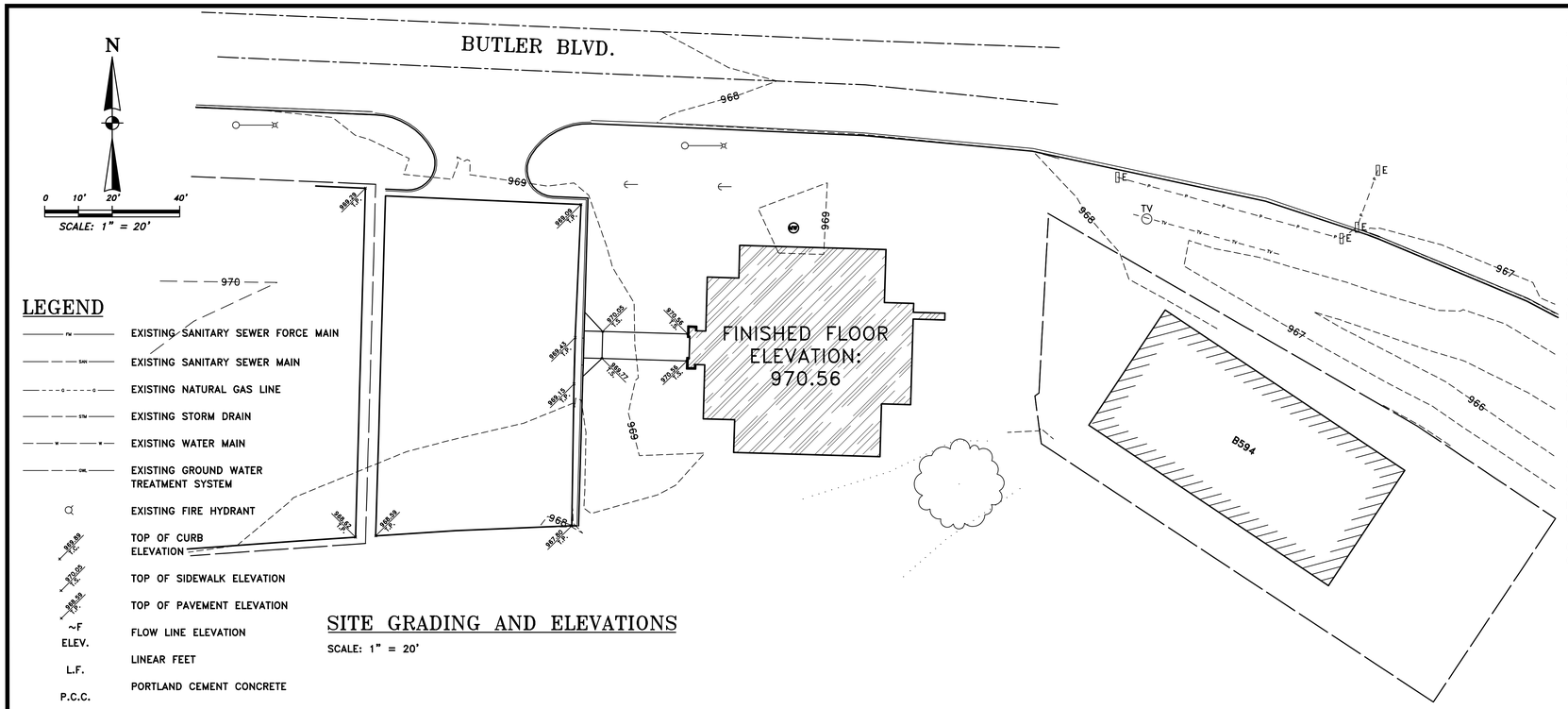


## LEGEND

| | |
|---|---|
| FM | EXISTING SANITARY SEWER FORCE MAIN |
| SAN | EXISTING SANITARY SEWER MAIN |
| G | EXISTING NATURAL GAS LINE |
| STM | EXISTING STORM DRAIN |
| W | EXISTING WATER MAIN |
| GWL | EXISTING GROUND WATER TREATMENT SYSTEM |
| | EXISTING FIRE HYDRANT |
| 969.85 TC | TOP OF CURB ELEVATION |
| 970.05 TS | TOP OF SIDEWALK ELEVATION |
| 969.95 TP | TOP OF PAVEMENT ELEVATION |
| ~F ELEV. | FLOW LINE ELEVATION |
| L.F. | LINEAR FEET |
| P.C.C. | PORTLAND CEMENT CONCRETE |

## SITE GRADING AND ELEVATIONS

SCALE: 1" = 20'

## PAVING NOTES

1. SUBGRADE PREPARATION AND GRADING. ALL FILL SHALL BE CONSTRUCTED AS STRUCTURAL FILL AND ALL EARTHWORK SHALL BE CONSTRUCTED PER THE RECOMMENDATIONS OF THE GEOTECHNICAL EXPLORATION REPORT PREPARED BY THIELE GEOTECH INC. (TG PROJECT NO. 07578.00, 11/21/2007). FOR CONCRETE PAVEMENTS THE UPPER 12 INCHES OF THE SUBGRADE SHALL BE COMPACTED TO A MINIMUM OF 90 PERCENT OF THE MAXIMUM DRY DENSITY AT A MOISTURE CONTENT BETWEEN −3 AND +4 PERCENT OF OPTIMUM (ASTM D1557 MODIFIED PROCTOR), AND SUBGRADE PREPARATION SHALL EXTEND A MINIMUM OF 2 FEET LATERALLY BEYOND THE EDGE OF THE PAVEMENT. UNDER SIDEWALKS, THE UPPER 6 INCHES OF THE SUBGRADE SHALL BE COMPACTED TO A MINIMUM OF 95 PERCENT OF THE MAXIMUM DRY DENSITY AT A MOISTURE CONTENT BETWEEN −3 AND +4 PERCENT OF OPTIMUM (ASTM D698, STANDARD PROCTOR), AND SUBGRADE PREPARATION SHALL EXTEND LATERALLY 6 INCHES BEYOND THE EDGE OF THE SIDEWALK.

2. PORTLAND CEMENT CONCRETE. PORTLAND CEMENT CONCRETE FOR PAVEMENT AND SIDEWALKS SHALL BE OMAHA STANDARD SPECIFICATION TYPE L6. MATERIAL AND CONSTRUCTION METHODS PER SECTION 500 OF THE OMAHA STANDARD SPECIFICATIONS. CONSTRUCT THICKENED EDGE PER STANDARD DETAIL WHERE PAVING ABUTS EXISTING PAVEMENT.

3. STRIPPING AND PAVEMENT MARKING. REMOVE ALL EXISTING PAVEMENT MARKINGS. PAVEMENT MARKINGS SHALL BE WHITE PAINTED PER SECTION 906 OF THE OMAHA STANDARD SPECIFICATIONS.

4. SEALING AND JOINTING. JOINT SEALANT SHALL BE PER SECTION 500 OF THE CITY OF OMAHA STANDARD SPECIFICATIONS. JOINTS IN PAVEMENT SHALL BE CONSTRUCTED AS SQUARE AS POSSIBLE AND PANELS SHALL NOT EXCEED 12 FEET AS MEASURED BETWEEN JOINTS. JOINTS IN SIDEWALK SHALL BE CONSTRUCTED AS SQUARE AS POSSIBLE AND PANELS SHALL NOT EXCEED 8 FEET. PAVEMENT JOINTS SHALL BE SAWED AND SEALED. SIDEWALK JOINTS CAN BE HAND TOOLED AND DO NOT REQUIRE SEALANT. CONSTRUCT EXPANSION JOINT AT INTERFACE OF SIDEWALK AND PAVEMENT PER DETAIL SHEET 4.

5. CONCRETE CURING. CONCRETE PAVEMENT SHALL BE CURED USING A WHITE PIGMENTED LIQUID MEMBRANE−FORMING CURING COMPOUND AND SHALL BE PER ARTICLE 500 OF THE CITY OF OMAHA STANDARD SPECIFICATIONS. THE MINIMUM RATE OF APPLICATION SHALL BE 200 SQ. FT. PER GAL. IF A MECHANICAL−POWERED SPRAYER IS USED AND 100 SQ. FT. PER GAL. IF A HAND−POWERED IS USED.

6. ALL PORTLAND CEMENT CONCRETE SIDEWALKS SHALL BE 4" THICK AND SHALL HAVE A 2% CROSS SLOPE UNLESS OTHERWISE NOTED.

## UTILITIES NOTES

1. COORDINATE LOCATION AND DEPTHS OF ALL SERVICE LINES WITH BUILDING MECHANICAL PLANS.

2. CONTRACTOR SHALL NOTIFY APPROPRIATE UTILITY COMPANIES TO COORDINATE CONNECTIONS AND RELOCATIONS. ALL CONNECTION COSTS, CONNECTION FEES, OR RELOCATION FEES SHALL BE PAID BY THE CONTRACTOR.

3. ALL EXISTING UTILITIES SHOWN ARE FROM PUBLIC RECORDS AND ARE FOR THE CONVENIENCE OF THE CONTRACTOR ONLY. THE CONTRACTOR IS RESPONSIBLE FOR VERIFYING EXACT LOCATION AND DEPTH PRIOR TO CONSTRUCTION.

4. WATER SERVICE. PIPE AND FITTINGS FOR WATER SERVICE SHALL BE PER THE SPECIFICATIONS OF THE WATER UTILITY COMPANY. BACKFILL FOR WATER SERVICE SHALL BE PER THE GEOTECHNICAL EXPLORATION REPORT.

5. SANITARY SEWER SERVICE. PIPE AND FITTINGS FOR SANITARY SEWER SERVICE SHALL BE SOLID WALL PVC PIPE PER ARTICLE 701 OF THE CITY OF OMAHA STANDARD SPECIFICATIONS. BACKFILL FOR SANITARY SEWER TRENCHES SHALL BE PER THE GEOTECHNICAL EXPLORATION REPORT. CONNECTION TO EXISTING SANITARY SEWER MANHOLE SHALL BE PER CITY OF OMAHA STANDARD PLATE.

## BUILDING CORNER DATA

| DESCRIPTION | NORTHING | EASTING |
|---|---|---|
| NORTHEAST CORNER | 491893.23 | 2767006.12 |
| NORTHWEST CORNER | 491894.49 | 2766962.81 |
| SOUTHWEST CORNER | 491833.18 | 2766961.02 |
| SOUTHEAST CORNER | 491831.92 | 2767004.34 |

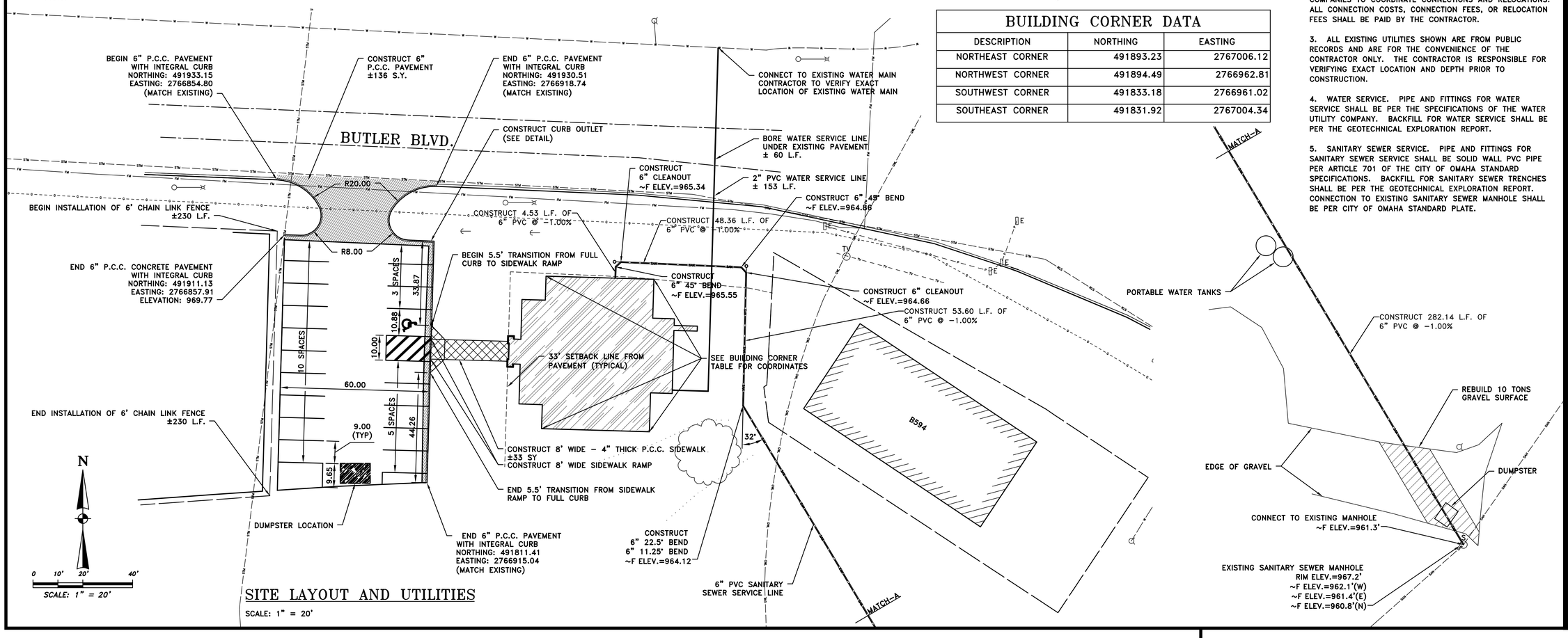


## SITE LAYOUT AND UTILITIES

SCALE: 1" = 20'

Offutt Air Force Base

APPROVED

| SIGNATURE | OFFICE |
|---|---|

COORDINATION

"SIGNING OF THE COVER SHEET CONSTITUTES COORDINATION OF ALL DRAWINGS IN THIS PROJECT; SUBSEQUENT SHEETS NEED NOT BE SIGNED."

DESIGN FIRM

ARCHITECT
ALLEY POYNER MACCHIETTO ARCHITECTURE, P.C.

MECHANICAL / ELECTRICAL
MORRISSEY ENGINEERING

STRUCTURAL
PERFORMANCE ENGINEERING

CIVIL ENGINEERING
KIRKHAM MICHAEL

PROFESSIONAL CIVIL ENGINEER
JAY B. FALLICK
E−11635
STATE OF NEBRASKA

| Designer | Project Manager |
|---|---|
| JBF | ATM |
| Drafter | Date |
| LTH | 27−JUNE−2008 |

| REVISION | BY/DATE |
|---|---|

SHEET TITLE
C2.0
SITE GRADING, LAYOUT AND UTILITIES

SHEET 3 OF 32

PROJECT TITLE
CONSTRUCT VETERINARY CLINIC, B595

Project Number
SGBP−07−0019

| Drawing Number | Facility Number |
|---|---|
| OFF−B−6052 | 595 |

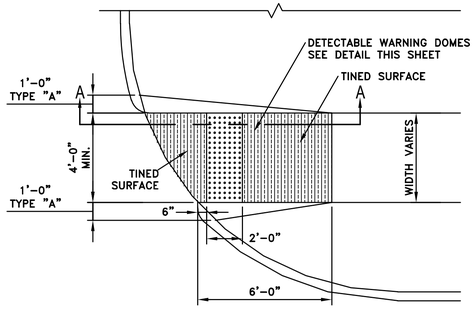


TYPE "A" CURB RAMP

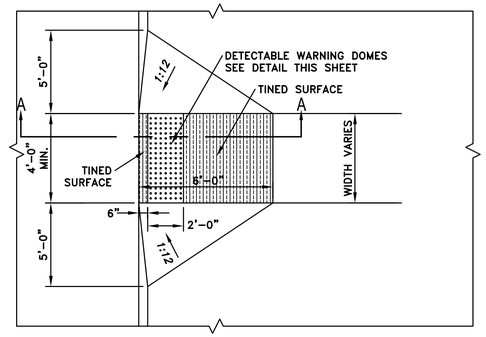


TYPE "B" CURB RAMP

## SINGLE CURB RAMP PLANS TYPE "A" AND "B"

NO SCALE

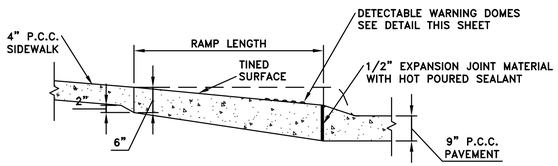


## CURB RAMP SECTION A-A

NO SCALE

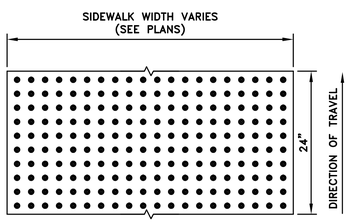


DOME ALIGNMENT

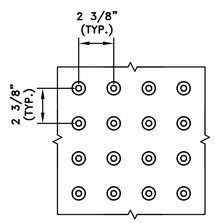


DOME SPACING

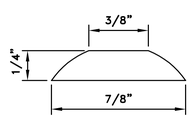


DOME SECTION

## DETECTABLE WARNING DETAILS

NO SCALE

## NOTE

CURB RAMP DETECTABLE WARNING PANEL. SEE CITY OF OMAHA WEBSITE, WWW.CI.OMAHA.NE.US OR CONTACT THE PUBLIC WORKS FOR AN APPROVED MATERIALS LIST OF DETECABLE WARNING PANELS.

## NOTE

CITY OF OMAHA STANDARD PLATES SHALL BE APPLICABLE FOR ALL CONSTRUCTION UNLESS OTHERWISE INDICATED OR MODIFIED BY THE CONTRACT DOCUMENTS. ADOPTED HEREIN BY REFERENCE ARE THE FOLLOWING CITY OF OMAHA STANDARD PLATES:

| PLATE NO. | PLATE NAME |
|---|---|
| 1-50 | CONCRETE PAVEMENT JOINT DETAILS |
| 1-60 | CONCRETE PAVEMENT WIDENING AND MISCELLANEOUS DETAILS |
| 723 | CONCRETE COLLAR SEWER TAP |

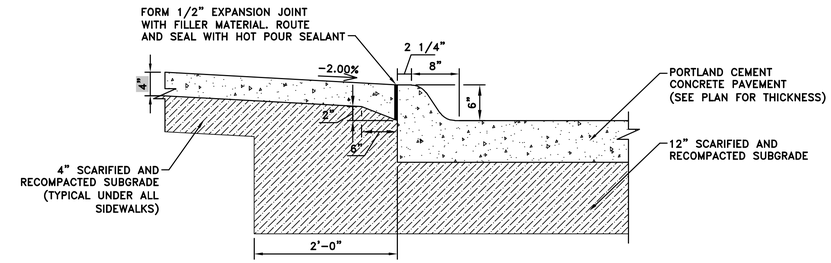


## P.C.C. PAVEMENT WITH INTEGRAL CURB AT 4" P.C.C. SIDEWALK

NO SCALE

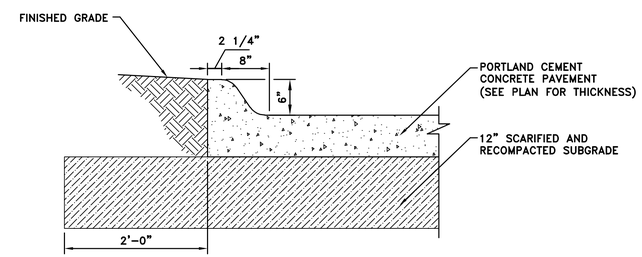


## P.C.C. PAVEMENT WITH INTEGRAL CURB AT FINISH GRADE

NO SCALE

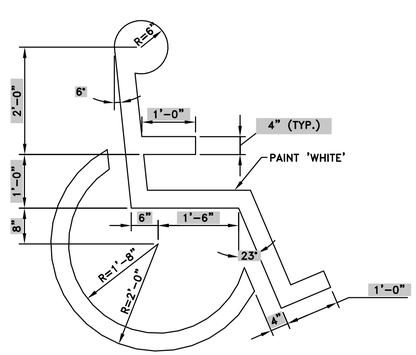


NOTE:
SYMBOL TO BE CENTERED IN PARKING SPACE AND ORIENTED AS ILLUSTRATED ON PLANS.

## WHEELCHAIR PAVEMENT MARKING

NO SCALE

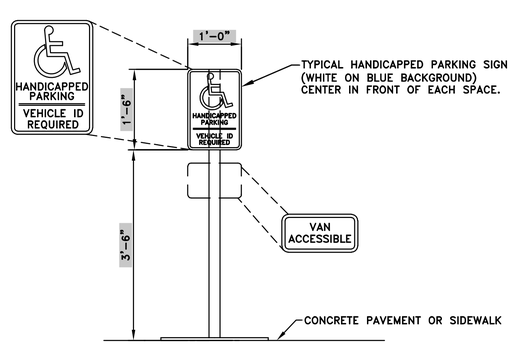


## HANDICAPPED PARKING SIGNAGE DETAIL

NO SCALE

## VALVE BOX TOP

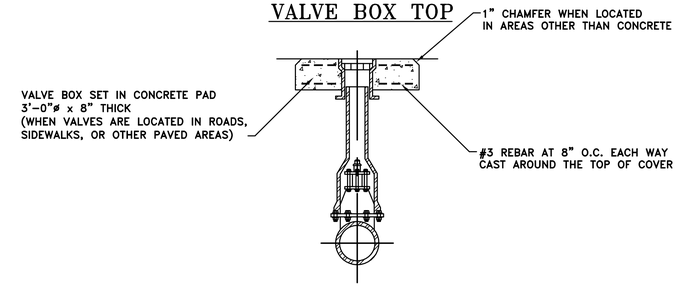


## VALVE BOX DETAIL

NO SCALE

Offutt
Air Force Base

APPROVED

| SIGNATURE | OFFICE |
|---|---|

COORDINATION

"SIGNING OF THE COVER SHEET CONSTITUTES COORDINATION OF ALL DRAWINGS IN THIS PROJECT; SUBSEQUENT SHEETS NEED NOT BE SIGNED."

DESIGN FIRM

ARCHITECT
ALLEY POYNER MACCHIETTO ARCHITECTURE, P.C.

MECHANICAL / ELECTRICAL
MORRISSEY ENGINEERING

STRUCTURAL
PERFORMANCE ENGINEERING

CIVIL ENGINEERING
KIRKHAM MICHAEL

PROFESSIONAL CIVIL ENGINEER
JAY B. FALLICK
E-11635
STATE OF NEBRASKA

| Designer | Project Manager |
|---|---|
| JBF | ATM |
| Drafter | Date |
| LTH | 27-JUNE-2008 |

| REVISION | BY/DATE |
|---|---|

SHEET TITLE
C3.0
CIVIL DETAILS

| SHEET | OF |
|---|---|
| 4 | 32 |

PROJECT TITLE
CONSTRUCT VETERINARY CLINIC, B595

| Project Number | |
|---|---|
| SGBP-07-0019 | |
| Drawing Number | Facility Number |
| OFF-B-6052 | 595 |

| | | | |
|---|---|---|---|
| & | AND | LAB. | LABORATORY |
| L | ANGLE | LAM. | LAMINATE |
| @ | AT | LAV. | LAVATORY |
| ℄ | CENTERLINE | LVR. | LOUVER |
| ø | DIAMETER OR ROUND | L.W. | LIGHTWEIGHT |
| # | POUND OR NUMBER | | |
| A/C | AIR CONDITIONING | MAS. | MASONRY |
| ACOUS. | ACOUSTICAL | MAX. | MAXIMUM |
| A.C.T. | ACOUST CEILING TILE | MECH. | MECHANICAL |
| A.D. | AREA DRAIN | MEMB. | MEMBRANE |
| ADJ. | ADJUSTABLE | MET. | METAL |
| A.F.F. | ABOVE FINISH FLOOR | MFR. | MANUFAPCURER |
| AGGR. | AGGREGATE | MH. | MANHOLE |
| ALT. | ALTERNATE | MIN. | MINIMUM |
| ALUM. | ALUMINUM | MISC. | MISCELLANEOUS |
| APPROX. | APPROXIMATE | M.O. | MASONRY OPENING |
| ARCH. | ARCHITECTURAL | MOD. | MODULAR |
| ASPH. | ASPHALT | MT. | MOUNT |
| | | MTD. | MOUNTED |
| BD. | BOARD | MTL. | MATERIAL |
| BITUM. | BITUMINOUS | MUL. | MULLION |
| BLDG. | BUILDING | | |
| BLK. | BLOCK | N. | NORTH |
| BLKG. | BLOCKING | N.I.C. | NOT IN CONTRAPC |
| BM. | BEAM | NO. | NUMBER |
| BOT. | BOTTOM | NOM. | NOMINAL |
| BSMT. | BASEMENT | N.T.S. | NOT TO SCALE |
| CAB. | CABINET | O.A. | OVERALL |
| CEM. | CEMENT | O.C. | ON CENTER |
| CER. | CERAMIC | O.D. | OUTSIDE DIAMETER |
| C.F. | CUBIC FOOT | OFF. | OFFICE |
| C.G. | CORNER GUARD | OH. | OVERHEAD |
| C.J. | CONTROL JOINT | OPNG. | OPENING |
| CLG. | CEILING | OPP. | OPPOSITE |
| CLR. | CLEAR | | |
| CMT. | CEMENT | PL. | PLATE |
| C.M.U. | CONC. MASONRY UNIT | P.LAM. | PLASTIC LAMINATE |
| CNTR. | COUNTER | PLAS. | PLASTER |
| C.O. | CASED OPENING | PLYWD. | PLYWOOD |
| COL. | COLUMN | PNT. | PAINT |
| CONC. | CONCRETE | PR. | PAIR |
| CONN. | COMNECTION | PRCST. | PRE-CAST |
| CONSTR. | CONSTRUCTION | PREFAB. | PREFABRICATED |
| CONT. | CONTINUOUS | PVC | POLYVINYL CHLORIDE |
| CONTR. | CONTRAPCOR | | |
| CPT. | CARPET | Q.T. | QUARRY TILE |
| CSK. | COUNTERSINK | | |
| C.T. | CERAMIC TILE | R. | RISER |
| C.Y. | CUBIC YARD | R.A. | RETURN AIR |
| | | RAD. | RADIUS |
| DBL. | DOUBLE | R.D. | ROOF DRAIN |
| DEMO. | DEMOLISH | REF. | REFERENCE |
| DET. | DETAIL | REFR. | REFRIGERATOR |
| D.F. | DRINKING FOUNTAIN | REG. | REGISTER |
| DIAG. | DIAGONAL | REINF. | REINFORCE |
| DIAM. | DIAMETER | REM. | REMOVE |
| DIM. | DIMENSION | REQ'D. | REQUIRED |
| DISP. | DISPENSER | RESIL. | RESILIENT |
| DIV. | DIVISION | REV. | REVERSE |
| DN. | DOWN | RM. | ROOM |
| DR. | DOOR | R.O. | ROUGH OPENING |
| DS. | DOWNSPOUT | | |
| DWG. | DRAWING | S. | SOUTH |
| | | S.C. | SOLID CORE |
| E. | EAST | SCHED. | SCHEDULE |
| EA. | EACH | S.D. | STORM DRAIN |
| E.J. | EXPANSION JOINT | SECT. | SECTION |
| EL. | ELEVATION | SHT. | SHEET |
| ELEC. | ELECTRICAL | SHWR. | SHOWER |
| ELEV. | ELEVATION | SIM. | SIMILAR |
| ENCL. | ENCLOSURE | SPEC. | SPECIFICATION |
| EQ. | EQUAL | SQ. | SQUARE |
| EQUIP. | EQUIPMENT | S.ST. | STAINLESS STEEL |
| E.W.C. | ELEC. WATER COOLER | STA. | STATION |
| EXIST. | EXISTING | STD. | STANDARD |
| EXP. | EXPANSION | STL. | STEEL |
| EXT. | EXTERIOR | STOR. | STORAGE |
| | | STR. | STRUCTURAL |
| F.D. | FLOOR DRAIN | SUSP. | SUSPENDED |
| FDN. | FOUNDATION | SYM. | SYMMETRICAL |
| F.E. | FIRE EXTINGUISHER | SYN. | SYNTHETIC |
| F.E.C. | FIRE EXTINGUISHER CABINET | T.C. | TOP OF CURB |
| FIN. | FINISH | T.G. | TOP OF GUTTER |
| FL. | FLOOR | TEL. | TELEPHONE |
| FLASH. | FLASHING | TERR. | TERRAZZO |
| FLUOR. | FLUORESCENT | T&G | TONGUE & GROOVE |
| F.O.C. | FACE OF CONCRETE | THK. | THICK |
| F.O.F. | FACE OF FINISH | Tlt. | TOILET |
| F.O.S. | FACE OF STUDS | T.O.M. | TOP OF MASONRY |
| FP. | FIREPROOF | T.O.W. | TOP OF WALL |
| FT. | FOOT OR FEET | TR. | TREAD |
| FTG. | FOOTING | TV | TELEVISION |
| FURR. | FURRING | TYP. | TYPICAL |
| GALV. | GALVANIZED | | |
| GA. | GAUGE | UNF. | UNFINISHED |
| GND. | GROUND | U.O.N | UNLESS OTHERWISE NOTED |
| GRD. | GRADE | UR. | URINAL |
| GYP. BD. | GYPSUM BOARD | | |
| GWB. | GYPSUM WALL BOARD | V.B. | VINYL BASE |
| | | VER. | VERIFY |
| H.B. | HOSE BIB | VERT. | VERTICAL |
| H.C. | HOLLOW CORE | VEST. | VESTIBULE |
| HDWD. | HARDWOOD | VIN. | VINYL |
| H.D.PART. | HIGH DENSITY PARTICLE BOARD | V.T. | VINYL TILE |
| I.D. | INSIDE DIAMETER | W. | WEST |
| INCL. | INCLUDE | W/ | WITH |
| INSUL. | INSULATION | W.C. | WATER CLOSET |
| INT. | INTERIOR | WD. | WOOD |
| | | W/O | WITHOUT |
| JAN. | JANITOR | WP. | WATERPROOF |
| JT. | JOINT | WSCT. | WAINSCOT |
| | | WT. | WEIGHT |
| KIT. | KITCHEN | W.W.M. | WELDED WIRE MESH |

## 1 ABBREVIATIONS
A1.0 SCALE: NO SCALE

## MATERIAL SYMBOLS

- EARTH
- GRANULAR FILL
- CONCRETE
- CONCRETE BLOCK
- FACE BRICK
- STEEL
- WOOD
- CONTINUOUS DIMENSION LUMBER
- NON-CONTINUOUS BLOCKING
- CERAMIC TILE OR QUARRY TILE
- BATT INSULATION
- RIGID INSULATION
- PLYWOOD
- STONE

## REFERENCE SYMBOLS

- 1 / A5.0 — DETAIL NUMBER / SHEET NUMBER
- 1 / A5.0 — INTERIOR ELEVATION
- 1 / A5.0 — DETAIL REFERENCE
- 1 / A5.0 — BUILDING SECTION
- ELEV 100'-0" — EXISTING ELEVATION
- 100'-0" FLOOR — NEW ELEVATION
- 101. — DOOR NUMBER
- 1 — EQUIPMENT NUMBER
- P-4 — WALL TYPE
- 4 — KEY NOTE
- KITCHEN PREP 101 — ROOM NUMBER
- EXISTING CONTOURS
- NEW CONTOURS
- PROPERTY LINE
- MATCH LINE
- N — NORTH ARROW
- PHOTO 1 — PHOTOGRAPH OR IMAGE
- PHOTO 3 — PHOTOGRAPH OR IMAGE

## 2 SYMBOLS
A1.0 SCALE: NO SCALE

# GENERAL NOTES

1. ALL DIMENSIONS ARE FACE TO FINISH TO FACE OF FINISH UNLESS NOTED OTHERWISE.

2. DO NOT SCALE FROM THE DRAWINGS.

3. THE CONTRACTOR SHALL PERFORM ALL TESTING AND INSPECTIONS REQUIRED, OR AS NECESSARY TO DEMONSTRATE A COMPLETE AND SATISFACTORY INSTALLATION.

4. THE CONTRACTOR SHALL COORDINATE ON SITE STORAGE OF BUILDING MATERIALS, EQUIPMENT, AND TRASH CONTAINERS WITH 55TH CES REPRESENTATIVE PRIOR TO COMMENCEMENT OF WORK.

5. ALL WORK SHALL COMPLY WITH CURRENT CODES, REGULATIONS, AND ORDINANCES.

6. ALL MATERIALS AND EQUIPMENT OF THE SAME TYPE SHALL BE SUPPLIED BY THE SAME MANUFACTURER, AND SHALL BE NEW, OF THE BEST QUALITY AND DESIGN, AND FREE FROM DEFECTS.

## 3 GENERAL NOTES
A1.0 SCALE: NO SCALE

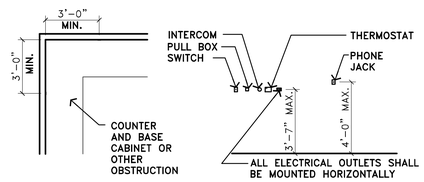


## 4 STANDARD ACCESSIBLE
OUTLETS & CONTROLS ABOVE COUNTERTOPS & OTHER OBSTRUCTIONS LESS THAN 25" IN DEPTH
A1.0 SCALE: 1/4" = 1'-0"

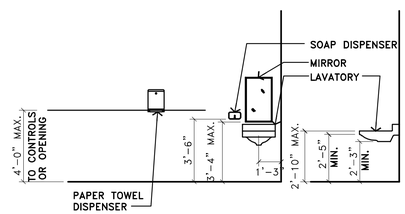


## 5 ACCESSIBLE FIXTURES & ACCESSORIES
A1.0 SCALE: 1/4" = 1'-0"

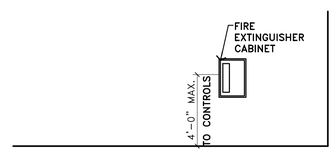


## 6 ACCESSIBLE FIXTURES
A1.0 SCALE: 1/4" = 1'-0"

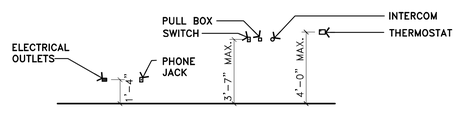


## 7 ACCESSIBLE OUTLETS, SWITCHES & CONTROLS
A1.0 SCALE: 1/4" = 1'-0"

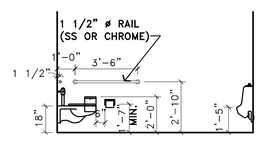


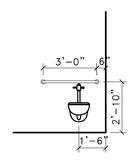


GENERAL NOTE: PROVIDE BLOCKING BEHIND GRAB BA WHERE APPLICABLE.

## 8 ACCESSIBLE FIXTURES & ACCESSORIES
A1.0 SCALE: 1/4" = 1'-0"

NOTE: ALL 5/8" GWB TO BE TYPE "X".

| TYPE | DESCRIPTION | THICKNESS | FIRE RATING | ASSEMBLY NUMBER |
|---|---|---|---|---|
| PARTITION | | | | |
| 4A | 3-5/8" STUDS 16" O.C. W/ 5/8" F.R. GYP. EA. SIDE. CONTINUOUS FLOOR TO STRUCTURE ABOVE. | 4 7/8" | – | – |
| 4B | 3-5/8" STUDS 16" O.C. W/ 5/8" F.R. GYP. EA. SIDE W/ BATT INSULATION. CONTINUOUS FLOOR TO STRUCTURE ABOVE. | 4 7/8" | – | – |
| 4C | 6" STUDS 16" O.C. W/ 5/8" F.R. GYP. EA. SIDE W/ BATT INSULATION. CONTINUOUS FLOOR TO STRUCTURE ABOVE. | 7 1/4" | – | – |
| 4D | 3-5/8" STUDS 16" O.C. W/ 5/8" F.R. GYP. ONE SIDE. CONTINUOUS FLOOR TO STRUCTURE ABOVE. | 4 1/4" | – | – |

| TYPE | DESCRIPTION | THICKNESS | RATING | NUMBER |
|---|---|---|---|---|
| CMU WALL | | | | |
| 8 | 8" CMU | 7-5/8" | – | – |
| 6 | 6" CMU | 5-5/8" | – | – |
| 4 | 4" CMU | 3-5/8" | – | – |

## 9 WALL TYPES
A1.0 SCALE: NO SCALE

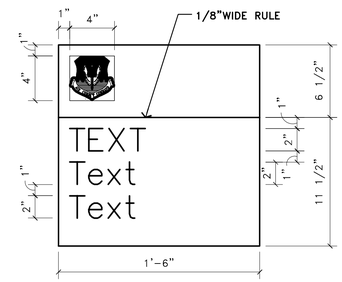


GENERAL NOTES:

COLOR: WHITE LETTERS AND NUMBERS ON STANDARD BROWN BACKGROUND.

DIMENSIONS 1'-6"x 1'-6".

EMBLEM 4"x 4" USED IN UPPER LEFT CORNER -FULL COLOR SHIELD.

STANDARD LAYOUT TYPOGRAPHY.-HELVETICA MEDIUM (NOT SHOWN)
-UNIT NAME: UPPER AND LOWER CASE, 2" CAPITAL LETTER HEIGHT, FLUSH LEFT.

-SECONDARY INFORMATION: UPPER AND LOWER CASE, 2" CAPITAL LETTER HEIGHT, FLUSH LEFT.

-THE MESSAGE AREA WILL ACCOMMODATE THREE LINES, WITH A MAXIMUM LINE LENGTH OF 10 TILES OR CARACTERS PER LINE.

RULE 1/8" WIDE, WHITE TAPE.
-CAN BE MOUNTED ON LEFT OR RIGHT SIDE OF DOOR.

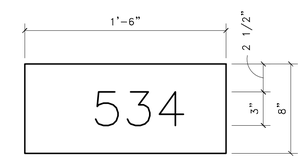


GENERAL NOTES:

COLOR: WHITE NUMBERS ON STANDARD BROWN BACKGROUND

DIMENSIONS 8"x 1'-6".

STANDARD LAYOUT TYPOGRAPHY. HELVETICA MEDIUM, 3" NUMBERS, NO LETTERS, CENTERED.

SIGN LOCATED 5'-4" ABOVE GRADE, ON THE CORNER THAT IS MOST VISIBLE WHEN APPROACHING THE BUILDING IN A VEHICLE.

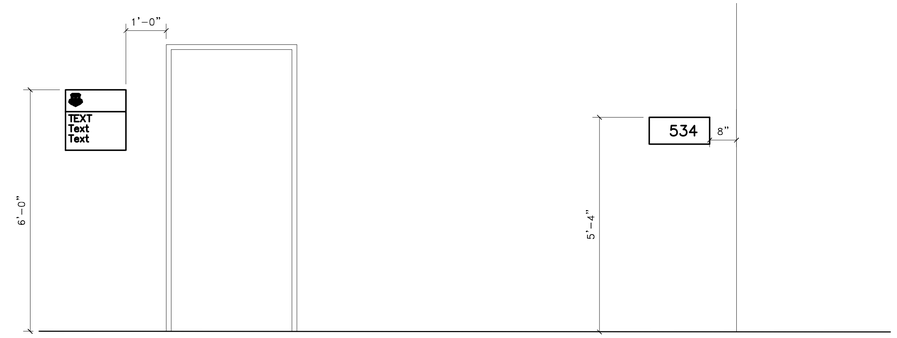


EXTERIOR SIGN – B4




EXTERIOR SIGN – B5

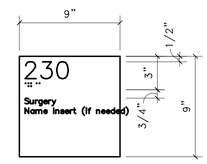


GENERAL NOTES:

COLOR: WHITE NUMBERS ON STANDARD BROWN BACKGROUND

DIMENSIONS 9"x 9".

ROOM NUMBER: HELVETICA MEDIUM, 1 1/2" NUMBERS, FLUSH LEFT AND ACCOMPANYING GRADE TWO BRAILLE.

TENANT NAME: UPPER AND LOWER CASE HELVETICA MEDIUM, 1/2" CAPITAL LETTER HIGHT, FLUSH LEFT.

SECONDARY INFORMATION: UPPER AND LOWER CASE HELVETICA REGULAR, 1/2" CAPITAL LETTER HEIGHT, FLUSH LEFT

INSERT AREA WILL ACCOMMODATE FOUR LINES WITH A MAX. 21 TILES OR CHARACTERS PER LINE.

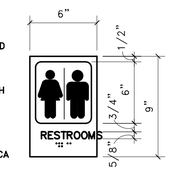


GENERAL NOTES:

COLOR: WHITE NUMBERS ON STANDARD BROWN BACKGROUND

SYMBOL: BLACK SYMBOL ON WHITE BACKGROUND

DIMENSIONS 9"x 6".

SERVICE NAME: UPPER CASE HELVETICA MEDIUM, 5/8" CAPITAL LETTER HEIGHT, CENTERED WITH ACCOMPANYING GRADE TWO BRAILLE. MESSAGE LINE WILL ACCOMMODATE A MAX OF 7 TILES.

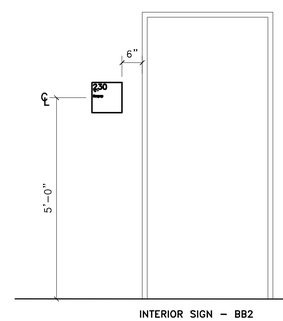


INTERIOR SIGN – BB2

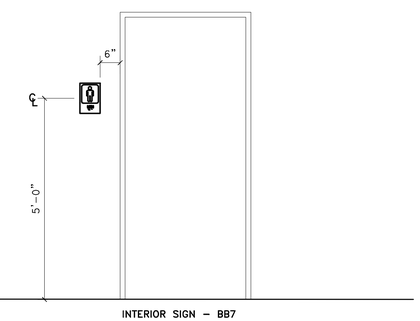


INTERIOR SIGN – BB7

## 10 SIGNAGE DETAILS
A1.0 SCALE: NO SCALE

NOTE: ALL SIGNAGE TO MEET UFC 3-120-1 STANDARDS.

Offutt
Air Force Base

APPROVED

| SIGNATURE | OFFICE |
|---|---|
| | |

COORDINATION

"SIGNING OF THE COVER SHEET CONSTITUTES COORDINATION OF ALL DRAWINGS IN THIS PROJECT; SUBSEQUENT SHEETS NEED NOT BE SIGNED."

DESIGN FIRM

ARCHITECT
ALLEY POYNER MACCHIETTO ARCHITECTURE, P.C.

MECHANICAL / ELECTRICAL
MORRISSEY ENGINEERING

STRUCTURAL
PERFORMANCE ENGINEERING

CIVIL ENGINEERING
KIRKHAM MICHAEL

The attached electronic document(s) is an instrument of service prepared by Alley Poyner Architecture and is being provided as requested by Offutt Air Force Base. The paper format of these drawings bear the seal(s) of the Registered Professional Architects and Engineers of Record. Due to the easily alterable nature of electronic documents, through either intentional or unintentional means, Alley Poyner Architecture does not make any express or implied warranty for the accuracy or completeness of this information. Hard copies (i.e., prints, paper copies, etc.) shall prevail in any dispute over accuracy or sufficiency of electronic documents.

| Designer | Project Manager |
|---|---|
| JRS | ATM |
| Drafter | Date |
| JRS | 30-MAY-2008 |

| REVISION | BY/DATE |
|---|---|
| | |

SHEET TITLE
A1.0
GENERAL INFORMATION

| SHEET | OF |
|---|---|
| 5 | 32 |

PROJECT TITLE
CONSTRUCT VETERINARY CLINIC, B595

Project Number
SGBP-07-0019

| Drawing Number | Facility Number |
|---|---|
| OFF-B-6052 | 595 |

## APPLICABLE CODES

IBC 2006 INTERNATIONAL BUILDING CODE

UFC-1-200-01 GENERAL BUILDING REQUIREMENTS

UFC-3-600-01 FIRE PROTECTION ENGINEERING FOR FACILITIES

UFC-4-010-01 DoD MINIMUM ANTI-TERRORISM STANDARDS FOR BUILDINGS

UFC-3-120-01 SIGN STANDARD

ALL OTHER UFC APPLICABLE STANDARDS

## EGRESS ANALYSIS LEGEND

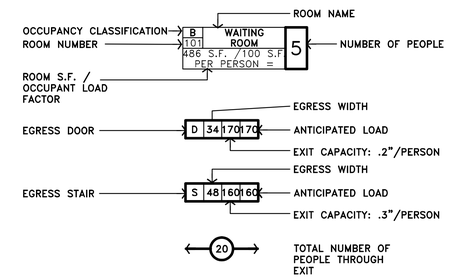


## NOTE:

UNLESS OTHERWISE NOTED THE FOLLOWING MAXIMUM FLOOR AREA ALLOWANCES APPLY:

OFFICES:

100 GROSS S.F. PER PERSON

## IBC 2006 – TABLE 601
## FIRE RESISTANCE RATING REQUIREMENTS FOR BUILDING ELEMENTS IN HOURS

BASED UPON TYPE IIIB

| BUILDING ELEMENT | PERMITTED/ REQUIRED | PROPOSED DESIGN |
|---|---|---|
| 1. STRUCTURAL FRAME (INCLUDING COLUMNS, GIRDERS, TRUSSES) | 0 | 0 |
| 2. NON-BEARING WALLS AND PARTITIONS | 0 | 0 |
| 3. FLOOR CONSTRUCTION (INCLUDING SUPPORTING BEAMS AND JOISTS) | 0 | 0 |
| 4. ROOF CONSTRUCTION (INCLUDING SUPPORTING BEAMS AND JOISTS) | 0 | 0 |
| 5. BEARING WALL EXTERIOR | 2 | 2 |

## IBC 2006 – TABLE 503
## ALLOWABLE HEIGHT AND BUILDING AREAS

| USE & OCCUPANCY CLASSIFICATION | HGT | TYPE OF CONSTRUCTION |
|---|---|---|
| | | TYPE IIIB |
| B | S | 4 STORIES – ALLOWED 1 ST. PROPOSED |
| | A | 19,000 – ALLOWED 3,567 S.F. PROPOSED |

## BUILDING AREA CALCULATIONS

FLOOR PLAN

| | |
|---|---|
| 100 VESTIBULE | 54 S.F |
| 101 WAITING AREA | 486 S.F |
| 102 RECEPTION AREA | 141 S.F. |
| 103 COMMUNICATION ROOM | 48 S.F |
| 104 NCOIC ROOM | 93 S.F. |
| 105 DIRECTOR ROOM | 98 S.F. |
| 106 XRAY ROOM | 114 S.F. |
| 107 LAUNDRY CLOSET | 16 S.F. |
| 108 JANITOR CLOSET | 33 S.F. |
| 109 MECHANICAL ROOM | 219 S.F. |
| 111 SURGERY PREPERATION AND LAB | 143 S.F. |
| 112 SURGERY ROOM | 137 S.F. |
| 113 HALLWAY | 369 S.F. |
| 114 PHARMACY AREA | 32 S.F. |
| 115 STORAGE CLOSET | 13 S.F. |
| 116 EXAM ROOM | 159 S.F. |
| 117 WORK AND BREAK ROOM | 111 S.F. |
| 118 EXAM ROOM | 157 S.F. |
| 119 TOILET ROOM | 59 S.F. |
| 120 TOILET ROOM | 59 S.F. |
| 123 HOLDING ROOM | 62 S.F. |
| 124 KENNEL | 162 S.F. |
| 125 VESTIBULE | 33 S.F. |
| TOTAL NET AREA | 2,798 S.F. |

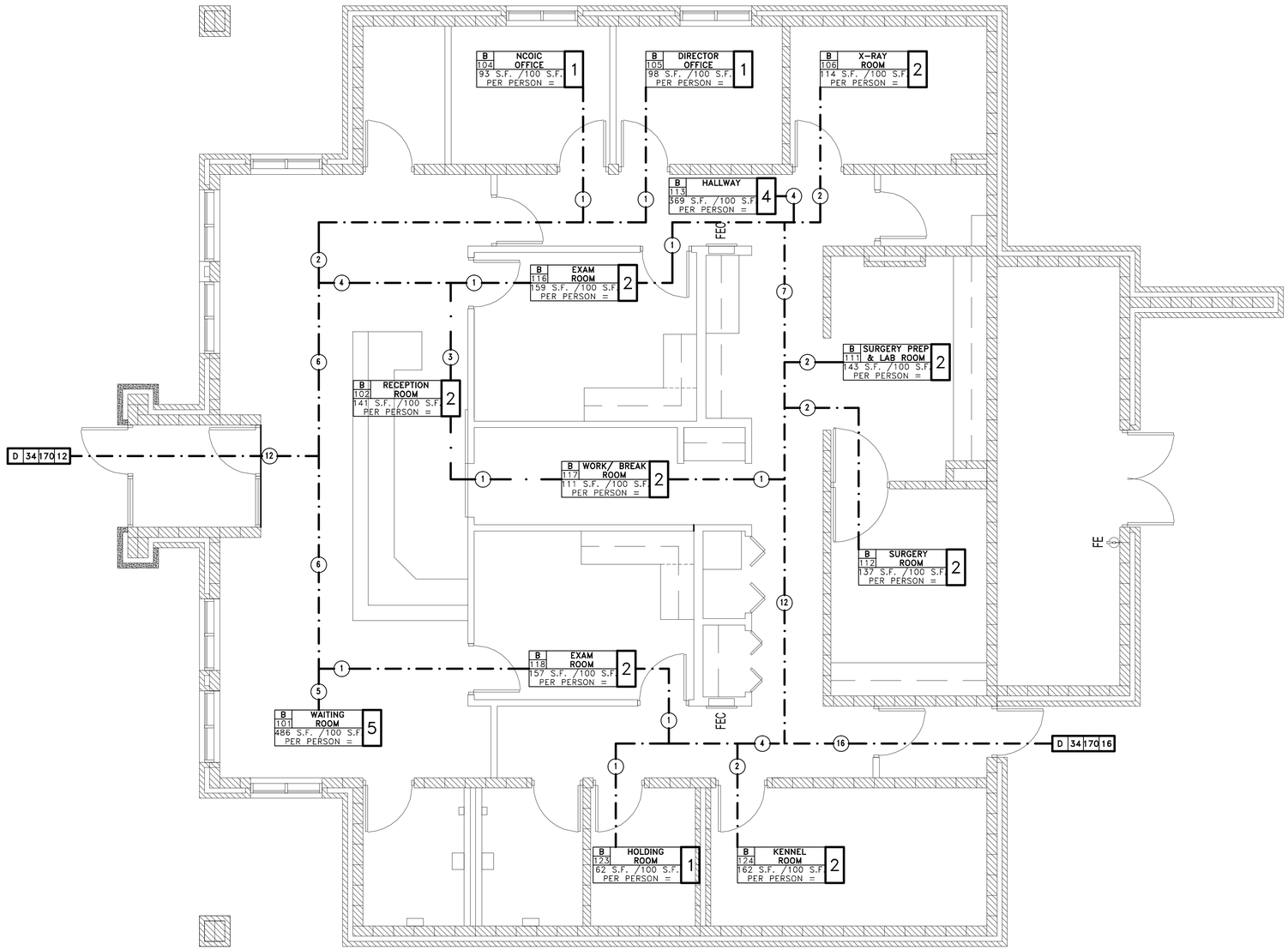


1 A1.1 EGRESS PLAN

SCALE: 1/4" = 1'-0"

Offutt Air Force Base

APPROVED

| SIGNATURE | OFFICE |
|---|---|

COORDINATION

"SIGNING OF THE COVER SHEET CONSTITUTES COORDINATION OF ALL DRAWINGS IN THIS PROJECT; SUBSEQUENT SHEETS NEED NOT BE SIGNED."

DESIGN FIRM

ARCHITECT
ALLEY POYNER MACCHIETTO ARCHITECTURE, P.C.

MECHANICAL / ELECTRICAL
MORRISSEY ENGINEERING

STRUCTURAL
PERFORMANCE ENGINEERING

CIVIL ENGINEERING
KIRKHAM MICHAEL

The attached electronic document(s) is an instrument of service prepared by Alley Poyner Architecture and is being provided as requested by Offutt Air Force Base. The paper format of these drawings bear the seal(s) of the Registered Professional Architects and Engineers of Record. Due to the easily alterable nature of electronic documents, through either intentional or unintentional means, Alley Poyner Architecture does not make any express or implied warranty for the accuracy or completeness of this information. Hard copies (i.e., prints, paper copies, etc.) shall prevail in any dispute over accuracy or sufficiency of electronic documents.

| Designer | Project Manager |
|---|---|
| JRS | ATM |
| Drafter | Date |
| JRS | 30-MAY-2008 |

| REVISION | BY/DATE |
|---|---|

SHEET TITLE

A1.1
CODE SHEET AND EGRESS PLAN

| SHEET | OF |
|---|---|
| 6 | 32 |

PROJECT TITLE

CONSTRUCT VETERINARY CLINIC, B595

Project Number: SGBP-07-0019

| Drawing Number | Facility Number |
|---|---|
| OFF-B-6052 | 595 |

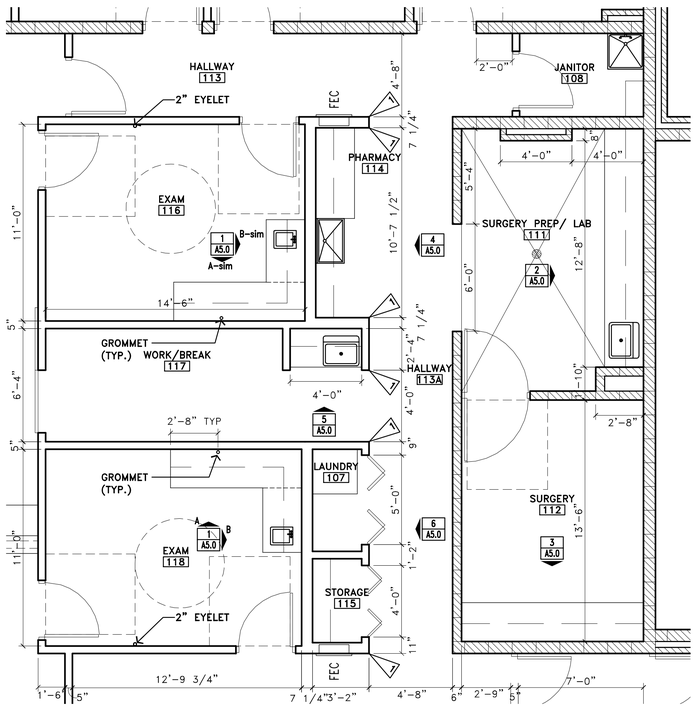


## 3 ENLARGED PLAN

A1.2 SCALE: 1/4" = 1'-0"

## CASED OPENINGS

G — GYPSUM BOARD CASED OPENING

## KEYED NOTES

1 — CORNER GUARD – 6' x 2" x 2" 22 GA STAINLESS STEEL

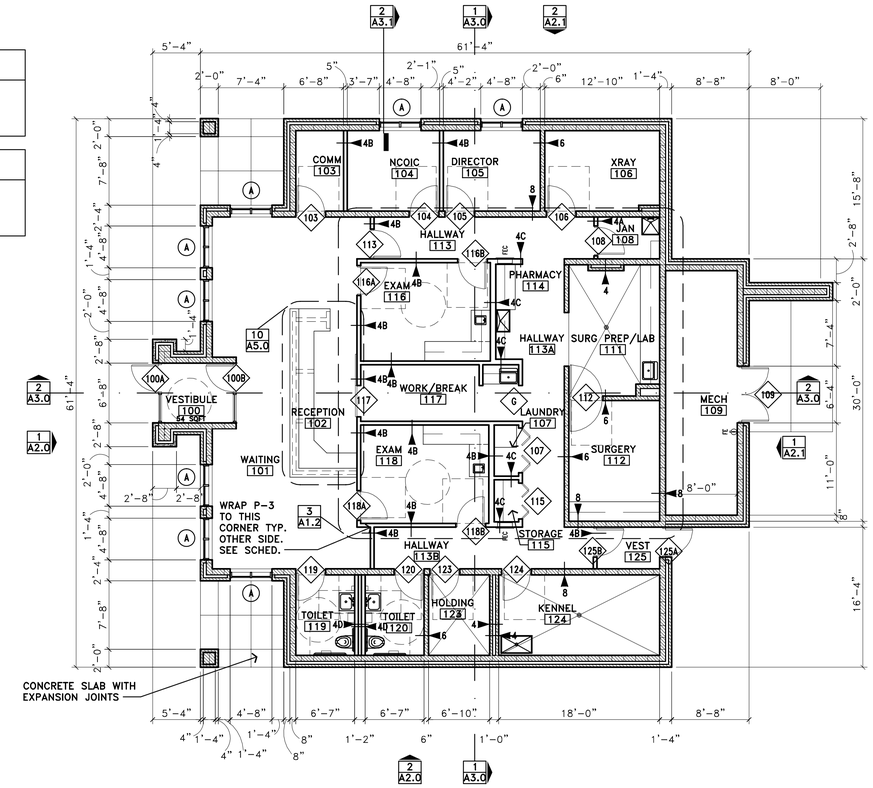


## 1 FLOOR PLAN

A1.2 SCALE: 1/8" = 1'-0"

## LEGEND

### REFLECTED CEILING PLAN

- CAN LIGHT SEE ELECTRICAL
- PENDENT LIGHT SEE ELECTRICAL
- WALL SCONCE SEE ELECTRICAL
- 2' X 4' FIXTURE SEE ELECTRICAL
- 1' X 4' FIXTURE SEE ELECTRICAL
- WALL MOUNTED FIXTURE SEE ELECTRICAL
- 2' x 2' DIFFUSER SEE MECHANICAL
- DIFFUSER SEE MECHANICAL
- GYPBOARD CEILING

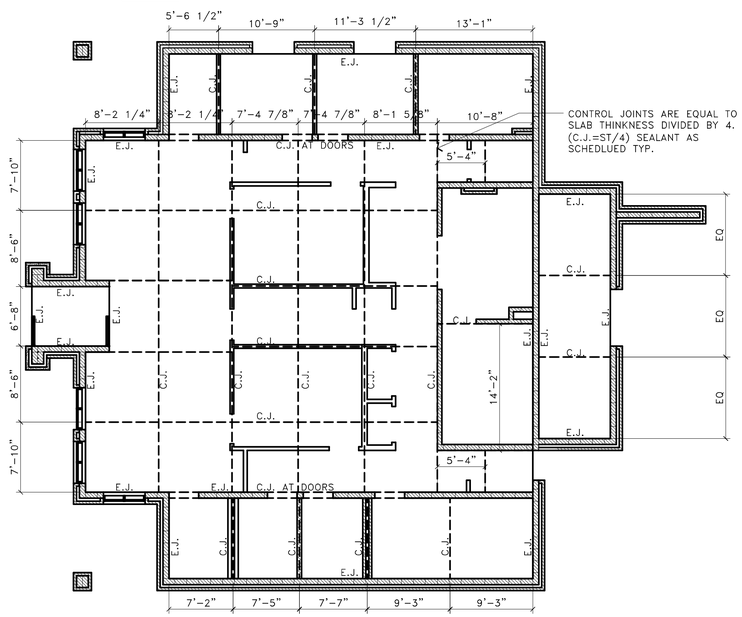


## 4 CONTROL JOINT PLAN

A1.2 SCALE: 1/8" = 1'-0"

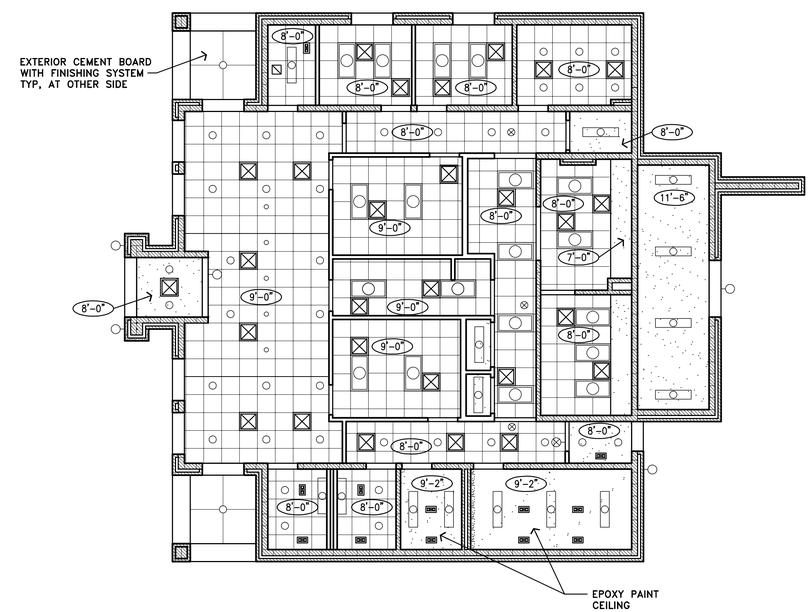


## 2 REFLECTED CEILING PLAN

A1.2 SCALE: 1/8" = 1'-0"

Offutt Air Force Base

APPROVED

| SIGNATURE | OFFICE |
|---|---|

COORDINATION

"SIGNING OF THE COVER SHEET CONSTITUTES COORDINATION OF ALL DRAWINGS IN THIS PROJECT; SUBSEQUENT SHEETS NEED NOT BE SIGNED."

DESIGN FIRM

ARCHITECT
ALLEY POYNER MACCHIETTO ARCHITECTURE, P.C.

MECHANICAL / ELECTRICAL
MORRISSEY ENGINEERING

STRUCTURAL
PERFORMANCE ENGINEERING

CIVIL ENGINEERING
KIRKHAM MICHAEL

The attached electronic document(s) is an instrument of service prepared by Alley Poyner Architecture and is being provided as requested by Offutt Air Force Base. The paper format of these drawings bear the seal(s) of the Registered Professional Architects and Engineers of Record. Due to the easily alterable nature of electronic documents, through either intentional or unintentional means, Alley Poyner Architecture does not make any express or implied warranty for the accuracy or completeness of this information. Hard copies (i.e., prints, paper copies, etc.) shall prevail in any dispute over accuracy or sufficiency of electronic documents.

| Designer | Project Manager |
|---|---|
| JRS | ATM |
| **Drafter** | **Date** |
| JRS | 30-MAY-2008 |

| REVISION | BY/DATE |
|---|---|

SHEET TITLE

A1.2
FLOOR PLAN,
REFLECTED CEILING PLAN
AND ENLARGED PLAN

| SHEET | OF |
|---|---|
| 7 | 32 |

PROJECT TITLE

CONSTRUCT VETERINARY CLINIC, B595

Project Number: SGBP-07-0019

| Drawing Number | Facility Number |
|---|---|
| OFF-B-6052 | 595 |

## ROOF KEY

- ROOF VENT
- VENT STACK CURB
- HEAT EXHAUST
- ROUND PENETRATION
- POWER VENT
- SLOPE — ROOF SLOPE
- DS — DOWNSPOUT
- GUTTER
- WALL MOUNTED EXTERIOR LIGHT

## EQUIPMENT SCHEDULE

EXAM TABLES – GOVERNMENT FURNISHED CONTRACTOR INSTALLED
X–RAY TABLE – GOVERNMENT FURNISHED CONTRACTOR INSTALLED
WET EXAM TABLE – GOVERNMENT FURNISHED CONTRACTOR INSTALLED
SURGERY TABLE – GOVERNMENT FURNISHED CONTRACTOR INSTALLED
SURGERY LIGHTS – GOVERNMENT FURNISHED CONTRACTOR INSTALLED
WASHER & DRYER – GOVERNMENT FURNISHED CONTRACTOR INSTALLED
REFRIGERATORS– GOVERNMENT FURNISHED CONTRACTOR INSTALLED

GENERAL NOTE: ALL OTHER FURNITURE NOT IN CONTRACT UNLESS NOTED OTHERWISE.

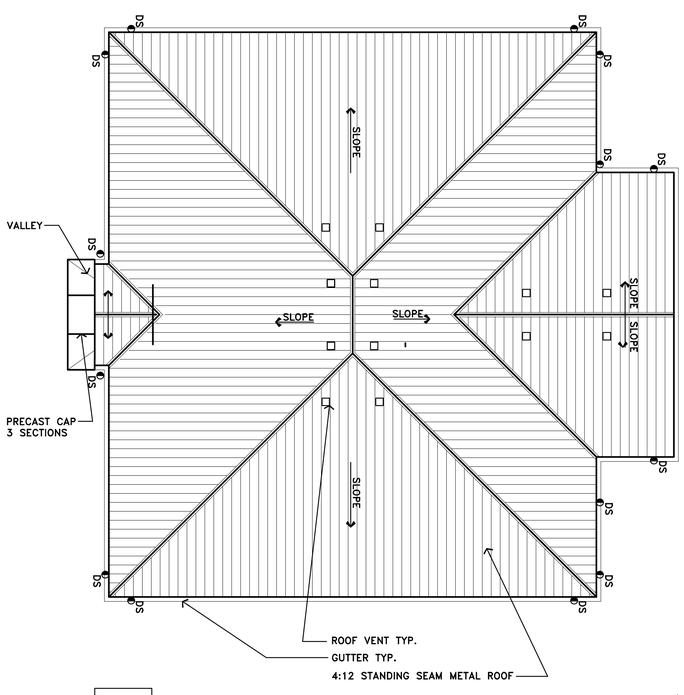


1 ROOF PLAN
A1.3 SCALE: 1/8" = 1'-0"

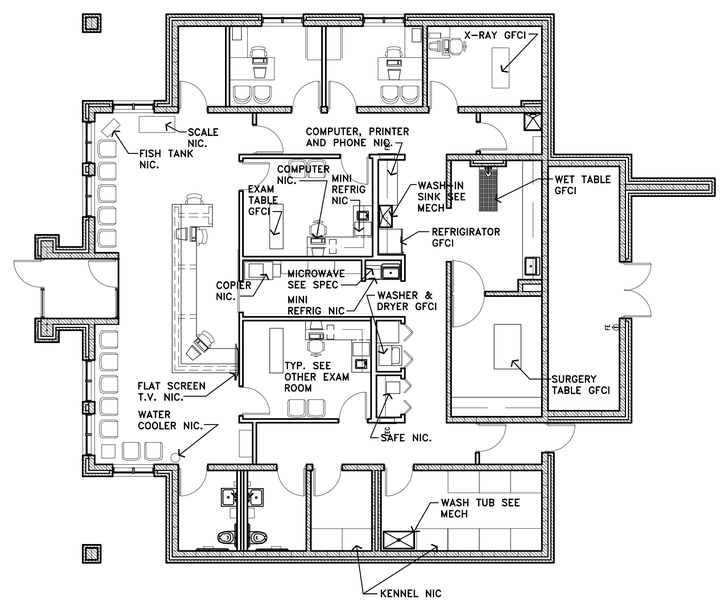


2 EQUIPMENT & FURNITURE PLAN
A1.3 SCALE: 1/8" = 1'-0"

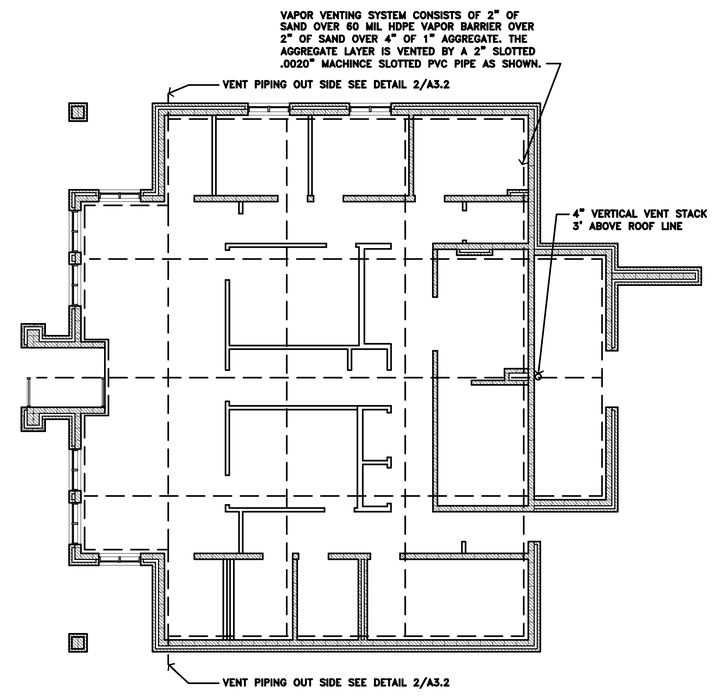


3 VAPOR VENT PIPING PLAN
A1.3 SCALE: 1/8" = 1'-0"

Offutt
Air Force Base

APPROVED

| SIGNATURE | OFFICE |
|---|---|
| | |

COORDINATION

"SIGNING OF THE COVER SHEET CONSTITUTES COORDINATION OF ALL DRAWINGS IN THIS PROJECT; SUBSEQUENT SHEETS NEED NOT BE SIGNED."

DESIGN FIRM

ARCHITECT
ALLEY POYNER MACCHIETTO ARCHITECTURE, P.C.

MECHANICAL / ELECTRICAL
MORRISSEY ENGINEERING

STRUCTURAL
PERFORMANCE ENGINEERING

CIVIL ENGINEERING
KIRKHAM MICHAEL

The attached electronic document(s) is an instrument of service prepared by Alley Poyner Architecture and is being provided as requested by Offutt Air Force Base. The paper format of these drawings bear the seal(s) of the Registered Professional Architects and Engineers of Record. Due to the easily alterable nature of electronic documents, through either intentional or unintentional means, Alley Poyner Architecture does not make any express or implied warranty for the accuracy or completeness of this information. Hard copies (i.e., prints, paper copies, etc.) shall prevail in any dispute over accuracy or sufficiency of electronic documents.

| Designer | Project Manager |
|---|---|
| JRS | ATM |
| **Drafter** | **Date** |
| JRS | 30–MAY–2008 |

| REVISION | BY/DATE |
|---|---|
| | |

SHEET TITLE
A1.3
EQUIPMENT/ FURNITURE, ROOF PLAN, AND VAPOR VENT PLAN

| SHEET | OF |
|---|---|
| 8 | 32 |

PROJECT TITLE
CONSTRUCT VETERINARY CLINIC, B595

Project Number
SGBP–07–0019

| Drawing Number | Facility Number |
|---|---|
| OFF–B–6052 | 595 |

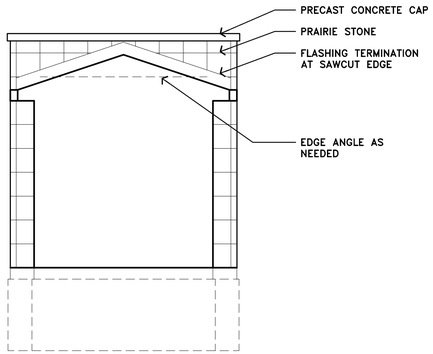


3 WEST ENTRANCE ELEVATION
A2.0 SCALE: 1/4" = 1'-0"

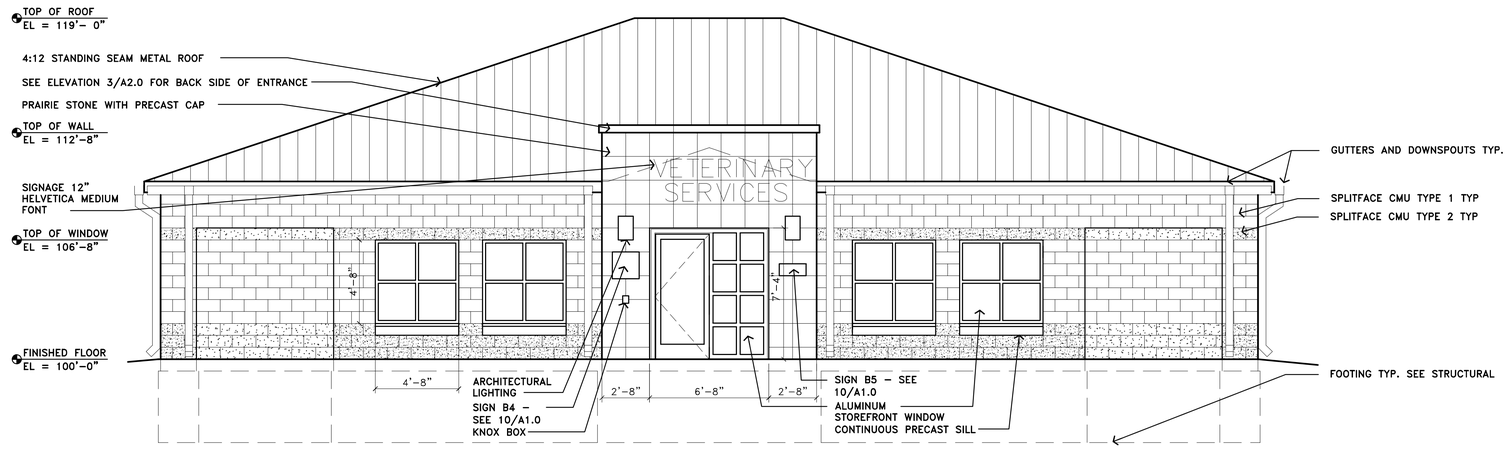


1 WEST ELEVATION
A2.0 SCALE: 1/4" = 1'-0"

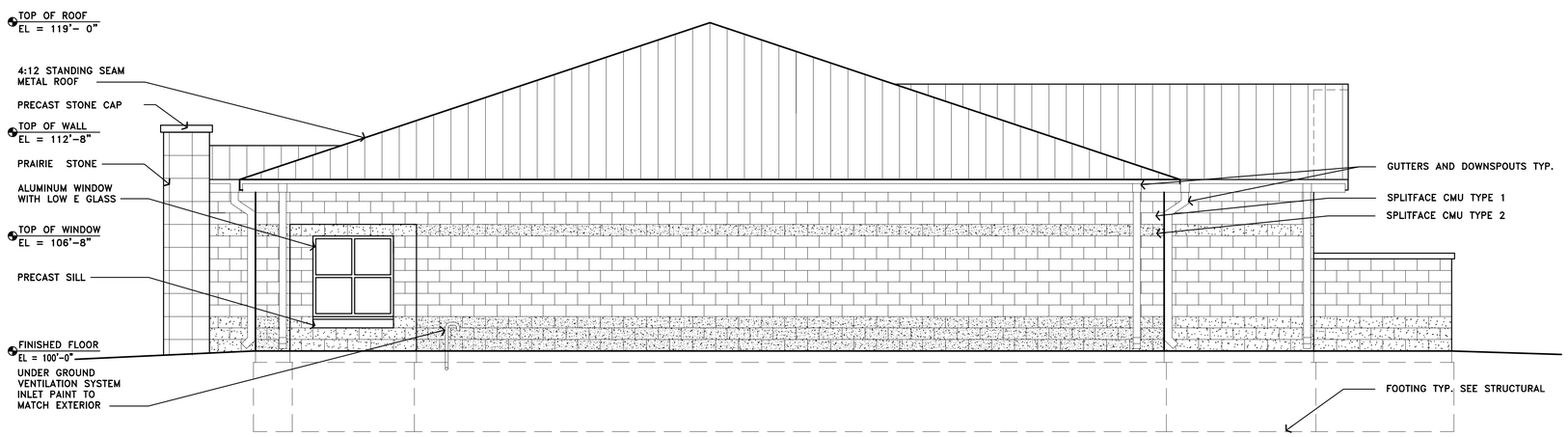


2 SOUTH ELEVATION
A2.0 SCALE: 1/4" = 1'-0"

Offutt
Air Force Base

APPROVED

| SIGNATURE | OFFICE |
|---|---|
| | |

COORDINATION

"SIGNING OF THE COVER SHEET CONSTITUTES COORDINATION OF ALL DRAWINGS IN THIS PROJECT; SUBSEQUENT SHEETS NEED NOT BE SIGNED."

DESIGN FIRM

ARCHITECT
ALLEY POYNER MACCHIETTO ARCHITECTURE, P.C.

MECHANICAL / ELECTRICAL
MORRISSEY ENGINEERING

STRUCTURAL
PERFORMANCE ENGINEERING

CIVIL ENGINEERING
KIRKHAM MICHAEL

The attached electronic document(s) is an instrument of service prepared by Alley Poyner Architecture and is being provided as requested by Offutt Air Force Base. The paper format of these drawings bear the seal(s) of the Registered Professional Architects and Engineers of Record. Due to the easily alterable nature of electronic documents, through either intentional or unintentional means, Alley Poyner Architecture does not make any express or implied warranty for the accuracy or completeness of this information. Hard copies (i.e., prints, paper copies, etc.) shall prevail in any dispute over accuracy or sufficiency of electronic documents.

| Designer | Project Manager |
|---|---|
| JRS | ATM |
| Drafter | Date |
| JRS | 30-MAY-2008 |

| REVISION | BY/DATE |
|---|---|
| | |

SHEET TITLE
A2.0
ELEVATIONS

| SHEET | OF |
|---|---|
| 9 | 32 |

PROJECT TITLE
CONSTRUCT VETERINARY CLINIC, B595

Project Number
SGBP-07-0019

| Drawing Number | Facility Number |
|---|---|
| OFF-B-6052 | 595 |

| Division | Section Title | Pages |
|---|---|---|
| 220100 | GENERAL REQUIREMENTS FOR PLUMBING | 1 |
| 220523 | VALVES FOR PLUMBING | 5 |
| 220720 | PIPE INSULATION FOR PLUMBING | 5 |
| 221116 | WATER DISTRIBUTION PIPING | 5 |
| 221123 | DOMESTIC WATER PUMPS | 3 |
| 221316 | DRAINAGE AND VENT PIPING | 4 |
| 221319 | PLUMBING SPECIALITIES | 11 |
| 223300 | DOMESTIC WATER HEATERS | 5 |
| 224000 | PLUMBING FIXTURES | 7 |
| 230100 | GENERAL MECHANICAL REQUIREMENTS | 6 |
| 230500 | BASIC MECHANICAL MATERIALS AND METHODS | 9 |
| 230505 | BASIC PIPING MATERIALS AND METHODS | 11 |
| 230700 | DUCT INSULATION | 5 |
| 230720 | PIPE INSULATION FOR HVAC | 4 |
| 233113 | METAL DUCTS AND ACCESSORIES | 11 |
| 233423 | POWER VENTILATORS | 4 |
| 235400 | FAN COIL UNITS | 4 |
| 236200 | AIR-TO-AIR HEAT PUMPS | 4 |

| Division | Section Title | Pages |
|---|---|---|
| 260100 | GENERAL ELECTRICAL REQUIREMENTS | 8 |
| 260500 | BASIC ELECTRICAL MATERIALS AND METHODS | 13 |
| 262416 | PANELBOARDS | 7 |
| 262726 | WIRING DEVICES | 8 |
| 262816 | ENCLOSED SWITCHES AND ENCLOSED CIRCUIT BREAKERS | 5 |
| 265100 | LIGHTING AND LIGHTING CONTROL | 7 |
| 267200 | COMMUNICATION AND DATA-PROCESSING EQUIPMENT | 11 |
| 268100 | FIRE ALARM | 16 |

**DIVISION 00**
SCHEDULE OF DRAWINGS 1
SECTION 1A GENERAL CONDITIONS 14
SECTION 1B GENERAL CONDITIONS 2
SECTION 1C ENVIRONMENTAL SPECIAL CONDITIONS 14
SUBMITTAL FORM AF66 7

**DIVISION 01 - GENERAL REQUIREMENTS**
011000 SUMMARY 4

**DIVISION 02 - EXISTING CONDITIONS**
024119 SELECTIVE STRUCTURE DEMOLITION 4

**DIVISION 03 – CONCRETE**
033000 CAST-IN-PLACE CONCRETE 6
033510 POLISHED CONCRETE 4

**DIVISION 04 - MASONRY**
042000 UNIT MASONRY 13
047200 CAST STONE MASONRY 7

**DIVISION 05 - METALS**
055 000 METAL FABRICATIONS 4

**DIVISION 06 - WOOD, PLASTICS, AND COMPOSITES**
061000 ROUGH CARPENTRY 5
061600 SHEATHING 4
061753 SHOP-FABRICATED WOOD TRUSSES
062013 EXTERIOR FINISH CARPENTRY 4
064023 INTERIOR ARCHITECTURAL WOODWORK 7

**DIVISION 07 - THERMAL AND MOISTURE PROTECTION**
072100 THERMAL INSULATION 5
074113 METAL ROOF PANELS 11
077100 ROOF SPECIALTIES 5
079200 JOINT SEALANTS 6

**DIVISION 08 - OPENINGS**
081113 HOLLOW METAL DOORS AND FRAMES 9
081416 FLUSH WOOD DOORS 4
083113 ACCESS DOORS AND FRAMES 3
084112 ALUMINUM-FRAMED ENTRANCES AND STOREFRONTS 8
084413 EXTERIOR ALUMINUM ENTRANCES 7
085113 ALUMINUM WINDOWS 7
087100 DOOR HARDWARE (SCHEDULED BY NAMING PRODUCTS) 18
088000 GLAZING 10
088300 MIRRORS 4

**DIVISION 09 - FINISHES**
092216 NON-STRUCTURAL METAL FRAMING 6
092400 PORTLAND CEMENT PLASTERING 3
092900 GYPSUM BOARD 6
093000 TILING 6
095113 ACOUSTICAL PANEL CEILINGS 7

| | | |
|---|---|---|
| 096513 | RESILIENT BASE AND ACCESSORIES | 4 |
| 099113 | EXTERIOR PAINTING | 5 |
| 099123 | INTERIOR PAINTING | 6 |
| **DIVISION 10 - SPECIALTIES** | | |
| 101400 | SIGNAGE | 5 |
| 102800 | TOLIET ACCESSORIES | |
| 104413 | FIRE EXTINGUISHER CABINETS | 4 |
| 104416 | FIRE EXTINGUISHERS | 3 |
| 102800 | TOILET AND BATH ACCESSORIES | 3 |
| **DIVISION 11 - EQUIPMENT** | | |
| 113100 | RESIDENTIAL APPLIANCES | 4 |
| **DIVISION 21 - FIRE SUPPRESSION** | | |
| 210100 | GENERAL REQUIREMENTS FOR FIRE SUPPRESSION | 1 |
| 211000 | WATER-BASED FIRE-SUPPRESSION SYSTEMS | 14 |
| **DIVISION 22 - PLUMBING** | | |
| 220100 | GENERAL REQUIREMENTS FOR PLUMBING | 1 |
| 220523 | VALVES FOR PLUMBING | 5 |
| 220720 | PIPE INSULATION FOR PLUMBING | 5 |
| 221116 | WATER DISTRIBUTION PIPING | 5 |
| 221123 | DOMESTIC WATER PUMPS | 3 |
| 221316 | DRAINAGE AND VENT PIPING | 4 |
| 221319 | PLUMBING SPECIALITIES | 11 |
| 223300 | DOMESTIC WATER HEATERS | 5 |
| 224000 | PLUMBING FIXTURES | 7 |
| **DIVISION 23 - HEATING VENTILATING AND AIR CONDITIONING** | | |
| 230100 | GENERAL MECHANICAL REQUIREMENTS | 6 |
| 230500 | BASIC MECHANICAL MATERIALS AND METHODS | 9 |
| 230505 | BASIC PIPING MATERIALS AND METHODS | 11 |
| 230700 | DUCT INSULATION | 5 |
| 230720 | PIPE INSULATION FOR HVAC | 4 |
| 233113 | METAL DUCTS AND ACCESSORIES | 11 |
| 233423 | POWER VENTILATORS | 4 |
| 235400 | FAN COIL UNITS | 4 |
| 236200 | AIR-TO-AIR HEAT PUMPS | 4 |
| **DIVISION 26 - ELECTRICAL** | | |
| 260100 | GENERAL ELECTRICAL REQUIREMENTS | 8 |
| 260500 | BASIC ELECTRICAL MATERIALS AND METHODS | 13 |
| 262416 | PANELBOARDS | 7 |
| 262726 | WIRING DEVICES | 8 |
| 262816 | ENCLOSED SWITCHES AND ENCLOSED CIRCUIT BREAKERS | 5 |
| 265100 | LIGHTING AND LIGHTING CONTROL | 7 |
| 267200 | COMMUNICATION & DATA-PROCESSING EQUIPMENT | 11 |
| 268100 | FIRE ALARM | 16 |
| **DIVISION 31 - EARTHWORK** | | |
| 313116 | TERMITE CONTROL | 3 |

**DIVISION 32 - EXTERIOR IMPROVEMENTS**
323113 CHAIN LINK FENCES AND GATES 5
329200 TURF AND GRASSES 5
329300 PLANTS 9

**APPENDIX A – GEOTECHNICAL EXPLORATION REPORT** 13

**APPENDIX B – VAPOR BARRIER AND PASSIVE VENTILATION SYSTEM** 2

**APPENDIX C – ORGANIC CHEMICAL DETECTION STUDY** 1