REG	STATE	PROJECT	SHEET NO.	TOTAL SHEETS
SE	FL	FWS-FLP 10(1)	A1	60

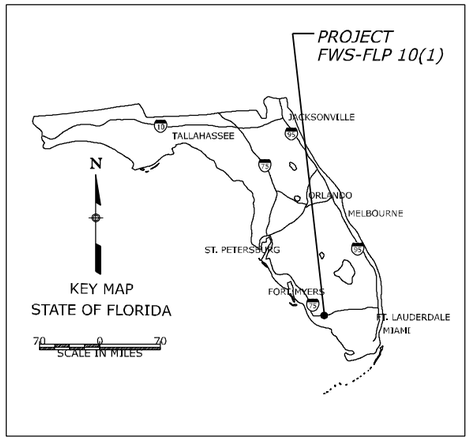

U.S. DEPARTMENT OF THE INTERIOR

FISH AND WILDLIFE SERVICE

FLORIDA PANTHER NATIONAL WILDLIFE REFUGE

PLANS FOR PROPOSED

PROJECT FWS-FLP 10(1)

CONSTRUCTION OF ACCESS ROAD TO
FLORIDA PANTHER NATIONAL WILDLIFE REFUGE ALONG I-75

COLLIER COUNTY, FLORIDA

INDEX TO SHEETS

SHEET NO	DESCRIPTION
A1	Title Sheet
A2	Symbols And Abbreviations
A3	Survey Control
A4	Location Map
B1-B3	Typical Sections
C1-C2	Tabulation of Quantities
C3	Construction Sign Schedule
C4	Permanent Sign Schedule
D1-D5	Plan And Profile
M1-M2	Erosion & Sediment Control Narrative and Plan
N1-N2	Traffic Control Plan
Q1-Q17	X-Sections: I-75 shoulder widening
Q18	X-Sections: Entrance Road
Q19-Q22	X-Sections: Permanent Staging Area to Existing Refuge Road
R1-R10	Bridge Plans
S1-S8	Standards and Details

DESCRIPTION OF PROJECT

IMPROVEMENT: The proposed work includes shoulder widening along I-75, a new refuge access road (not for public use) off of I-75, a new permanent refuge staging area, and a new bridge linking the new access road with an existing refuge road.

PROJECT LENGTH: 660 Feet (Access Road)
2,400 Feet (I-75 Shoulder Widening)

ROAD:

		WIDTH	TYPE
SURFACE:	Shoulder Widening	Varies	Asphalt
	Entrance Road	Varies	Concrete, Aggregate
BASE		Varies	Aggregate

BRIDGE: Precast, prestressed box beams with a geosynthetic reinforcing soil foundation

DESIGN DESIGNATION:

	I-75	I-75 Access Road
ADT (2009)	33,534	2 veh. per wk (Estimated; only refuge personnel allowed access)
ADT (2029)	49,830	2 veh. per wk (Estimated; only refuge personnel allowed access)
DHV	n/a	n/a
D	n/a	n/a
%Truck	n/a	85%
V (MPH)	70	15
C/A	None	None
e(max)	8%	8%

SPECIFICATIONS:

"Standard Specifications for Construction of Roads and Bridges on Federal Highway Projects", FP-03 U.S.Customary Units.

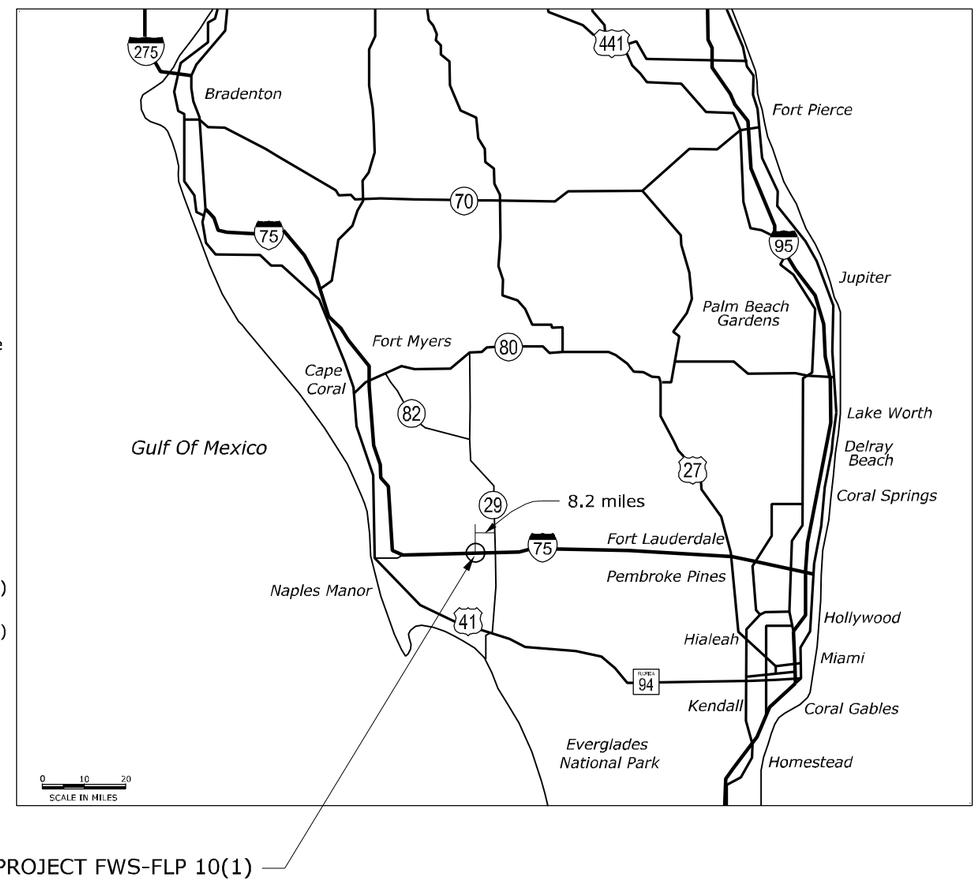

NOTE: THE SCALE OF THESE PLANS MAY HAVE CHANGED DUE TO REPRODUCTION

CALL SUNSHINE STATE ONE CALL OF FLORIDA, INC.
811 OR 1-800-432-4770
www.callsunshine.com/corp/index.html

PLANS PREPARED BY

U.S. Department of Transportation
Federal Highway Administration

EASTERN FEDERAL LANDS HIGHWAY DIVISION
STERLING, VIRGINIA
MAY, 2008

PROJECT MANAGER	LEAD DESIGNER
Craig Sanders	Alazar Feleke

SAMMS # 03126133

5/1/2008 7:44:59 AM M:\Projects\refuge\fl\flp10(1)\proj_dev\CADD\00% plan\01-flp10(1)_t1.dgn

REG	STATE	PROJECT	SHEET NO.
SE	FL	FWS-FLP 10(1)	A2

Abutment	Abut.
Aggregate	aggr.
Ahead	AH
Alternate	alt.
Average daily traffic	ADT
Back	BK
Balance point	BP
Bearing	brg.
Begining	beg.
Bench mark	BM
Centerline	
Center to center	cc, c-c or c. to c.
Centers	ctrs.
Clear	clr.
Column	col.
Connection	conn.
Construction joint	Constr. jt.
Continuous	cont.
Corrugated metal pipe	CMP
Culvert	culv.
Curve centeral angle (spiral curve transitions)	Δ_c
Curve total angle (curve delta or deflection)	Δ
Design hourly volume	DHV
Design speed	V
Diagonal	diag.
Diameter	D, dia., or
Diaphragm	diaph.
Distance	dist.
Drawing(s)	dwg(s), or drwg(s)
Drop Inlet	DI
East	E
Edge of pavement	EP or EOP
Elevation	elev.
Elevation with number	El. 94.161 [El. 94.16]
Embankment	emb.
End section	ES
Equation	EQ or eq.
Excavation	exc.
Expansion joint	exp. jt.
Finish	fin.
Flange	flg.
Footing	ftg.
Galvanized	galv.
Gage(gauge)	ga.
Headwall	hdwl.
Hexagon	hex.
High water	HW
Inside diameter	ID
Joint	jt.
Lamination	lam.
Latitude	lat.
Left	lt., Lt. or LT
Length of curve(simple curve)	L
Length of curve (spiral curve transision)	Lc
Length of spiral	Ls
Longitudinal(longitude)	long.
Low water	LW

Mainline	M.L.
Material	matl.
Maximum	max.
Mile[Kilometer] post	M.P[K.P.]
Minimum	min.
Monument	mon.
Mechanically stabilized embankment	MSE
Original groung	OG
Out to out	o. to o.
Outside diameter	OD
On centers	o. c.
Normal crown	NC or NCR
North	N
Pavement	pvmt.
Plate	pl.
Point of compound curve	PCC
Point of curve	PC
Point of curve to spiral	PCS or CS
Point of intersection	PI
Point of spiral to curve	PSC or SC
Point of spiral to reverse spiral	SRS
Point of spiral to tangent	PST or ST
Point of tangent	PT
Point of tangent to spiral	PS or TS
Point on curve	POC
Point on spiral	POS
Point on tangent	POT
Radius	R
Range	R.
Reinforcement (reinforced)	reinf.
Required	reqd.
Right	Rt., rt.or RT
Right-of-way	R/W
Roadway	Rdwy.
Route	Rte.
Section	Sec.
South	S
Spacing, spaces or spaced	spa.
Spiral central angle	s
Standard	std.
Station	Sta.
Stiffener	stiff.
Stringer	stgr.
Structure	struc.
Superelevation rate	e
Symmetrical	sym.
Tangent distance (tangent length)	T
Tangent distance (spiral curve transision)	Ts
Temporary benchmark	TBM
Temporary construction easement	TCE
Thread	thd.
Township	T.
Typical	typ.
Vehicle per hour	vph
Vertical point of intersection	VPI
West	W

NATIONAL BOUNDARY
STATE BOUNDARY
COUNTY BOUNDARY
CITY BOUNDARY
TOWNSHIP or RANGE LINE
SECTION LINE
¼ SECTION LINE
1/16 SECTION LINE
NATIONAL PARK or FOREST BOUNDARY
PROPERTY LINE — P/L
TRAVERSE POINT (Horizontal & Vertical) Top of Triangle Points North — T-45, 2,645.9
TRAVERSE POINT (Horizontal) — T-3
BRASS CAP
STEEL PIN
HUB & TACK
SPOT ELEVATION — 99.9
COORDINATE GRID TICK

	EXISTING	PROPOSED
RIGHT-OF-WAY LINE	R/W	R/W
RIGHT-OF-WAY LINE with MONUMENT	R/W	R/W
SECTION CORNER	FOUND: 36 31 / 1 6	PROJECTED: 36 31 / 1 6
¼ SECTION CORNER	15 / 22	15 / 22
1/16 SECTION		
PROPERTY CORNER		No Symbol
PARCEL NUMBER	No Symbol	400
EASEMENT (Permanent - Construction)	P/E	C/E
ROUTE NUMBERS	26 INTERSTATE	25 U.S. / 694 STATE

SLOPE STAKE — TOP OF CUT, TOE OF FILL, TRANSITION
ROADWAY, EXISTING
RAILROAD — SINGLE TRACK, MULTIPLE TRACK
TRAIL
INTERMITTENT DRAINAGE/ SMALL CREEK
SPRING
LARGE CREEK/RIVER
LAKE, POND or RESERVOIR; MARSHLAND
PAVEMENT REMOVAL/ROADWAY OBLITERATION
FULL DEPTH PAVEMENT
SIDEWALK ASPHALT/CONCRETE
MILL AND OVERLAY
OVERLAY
SILT FENCE — SF, DB
DIVERSION BERM
DIVERSION CHANNEL
CHECK DAM
RIPRAP/CULVERT RIPRAP
BORING LOCATION — B-1
TEST PIT — TP-1
NORTH ARROW — N
MATERIAL SOURCE

AREA PATTERN

	EXISTING	PROPOSED
FENCE	X X	XX XX
GATE with FENCE	X X	XX XX
CATTLEGUARD		
GUARDRAIL		
MEDIAN & SIDE (CONCRETE) BARRIER		
SIGNS — POST MOUNTED		
SIGNS — PORTABLE	No Symbol	
RETAINING WALL		wall face
OVERHEAD(POWER POLE) UTILITIES P=Electrical for transmission line E=Electrical for distribution line T=Telephone, E&T=Joint Electrical and Telephone FO=Fibre optics	P	P
SUPPORT POLE with ANCHOR		
TELEPHONE BOOTH or PEDESTAL	TB or TP	TB or TP
STREET LIGHT	or	or
UNDERGROUND UTILITIES G=gas, O=oil, P=power, SA=sanitary sewer, SS=storm sewer, T=telephone, W=water E=electrical, FO=fibre optics	W	W
BRIDGE		
PIPE CULVERT (arrow shows flow)		
PIPE CULVERT with END SECTION		
PIPE CULVERT with HEADWALL		
CULVERT with DROP INLET		
BOX CULVERT		
UNDERDRAIN	UD	UD
BUILDING		
TREELINE; TREE		

PROJECT SPECIFIC SYMBOLS AND ABBREVIATIONS:-

U.S. DEPARTMENT OF TRANSPORTATION
FEDERAL HIGHWAY ADMINISTRATION
EASTERN FEDERAL LANDS HIGHWAY DIVISION
STERLING, VIRGINIA

FLORIDA PANTHER NATIONAL WILDLIFE REFUGE

SYMBOLS AND ABBREVIATIONS

M:\Projects\refuge\FWS\flp01\proj_dev\CADD\00X_plan\0-flp01L_sym.dgn 11:08:31 AM 4/30/2008

REG	STATE	PROJECT	SHEET No.
SE	FL	FWS-FLP 10(1)	A3

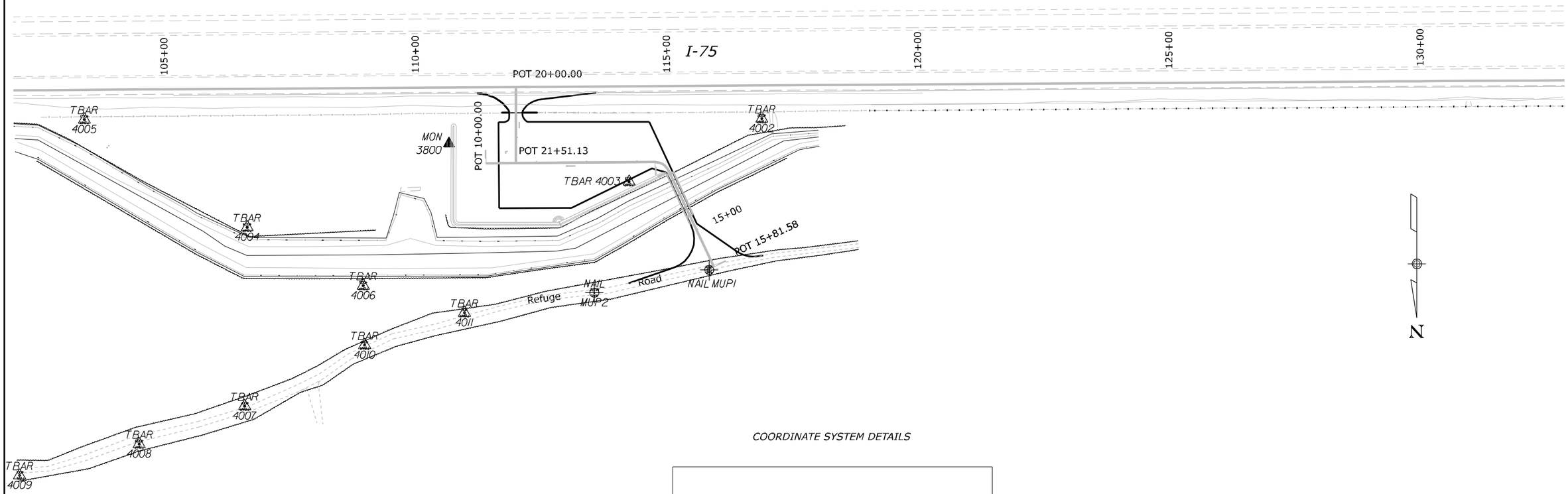

COORDINATE SYSTEM DETAILS

Coordinate System	:	US State Plane 1983(at ground)
Zone	:	Florida West 0902
Datum	:	NAD 1983 (Conus)
Ellipsoid Name	:	Geodetic Ref System 1980
Geoid Model	:	GEOID03 (Conus)
Ground scale factor	:	0.9995650423
Centroid	:	0.000

SURVEY CONTROL POINTS

		Northing	Easting	Elevation
MON	3800	661544.790	499196.718	11.732
TBAR	4002	661495.095	498574.342	11.635
TBAR	4003	661620.672	498838.480	11.270
TBAR	4004	661711.471	499598.590	11.149
TBAR	4005	661496.853	499922.632	11.618
TBAR	4006	661827.583	499367.512	11.282
TBAR	4007	662067.620	499603.534	11.493
TBAR	4008	662143.091	499813.508	11.716
TBAR	4009	662205.387	500051.606	11.365
TBAR	4010	661946.186	499364.751	11.451
TBAR	4011	661881.733	499166.049	11.382
NAIL	MUP1	661796.252	498678.762	11.507
NAIL	MUP2	661841.786	498907.603	11.499

0 100 200
SCALE IN FEET

U.S. DEPARTMENT OF TRANSPORTATION
FEDERAL HIGHWAY ADMINISTRATION
EASTERN FEDERAL LANDS HIGHWAY DIVISION
STERLING, VIRGINIA

FLORIDA PANTHER
NATIONAL WILDLIFE REFUGE

SURVEY INFORMATION SHEET

4/30/2008 11:09:57 AM M:\Projects\refuge\fl\flp10\proj_dev\CADD\00% plan\AD-FLP10(1)_srvy.dgn

REG	STATE	PROJECT	SHEET No.
SE	FL	FWS-FLP 10(1)	A4

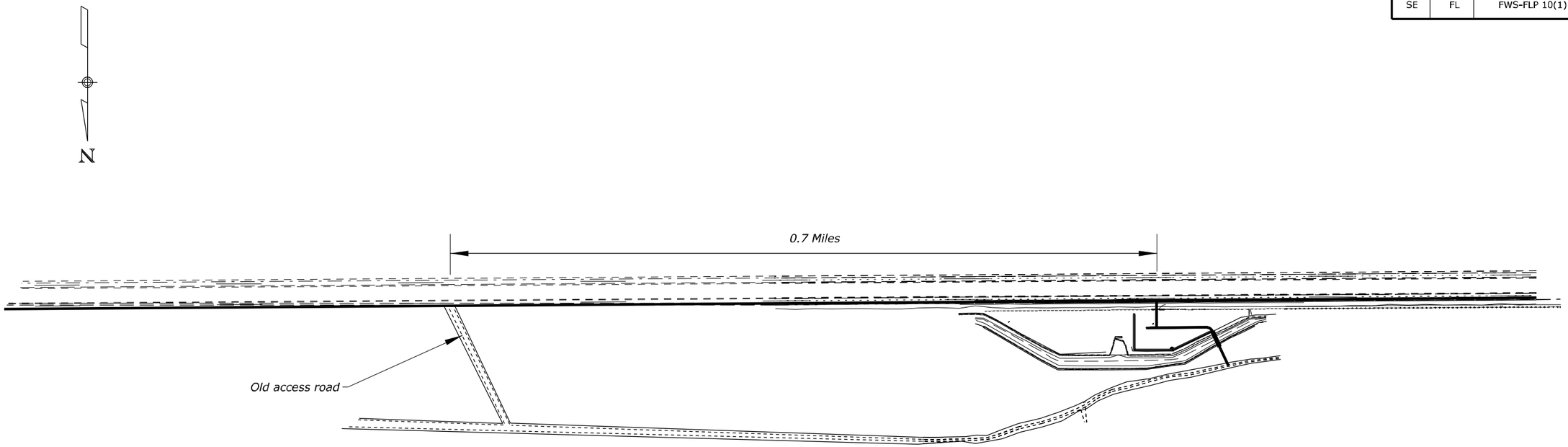

Notes:

1. *Access to the north side of the canal can be made through the old access road, approximately 0.7 miles to the east of the proposed entrance.*
2. *Large equipment (i.e. excavator) using the old entrance must be off-loaded under a one-lane closure of I-75 between the hours of 10 PM and 6 AM and walked back to the project site.*
3. *Any haul operations through the old entrance must be done under a one-lane closure between the hours of 10 PM and 6 AM.*

NOT TO SCALE

U.S. DEPARTMENT OF TRANSPORTATION
FEDERAL HIGHWAY ADMINISTRATION
EASTERN FEDERAL LANDS HIGHWAY DIVISION
STERLING, VIRGINIA

FLORIDA PANTHER
NATIONAL WILDLIFE REFUGE

LOCATION MAP

6/19/2008 12:51:19 PM M:\Projects\refuge\fl\flp\01\proj_dev\CADD\00% plan\A0-FLP10(1)_loc.dgn

REG	STATE	PROJECT	SHEET NO.
SE	FL	FWS FLP 10(1)	B1

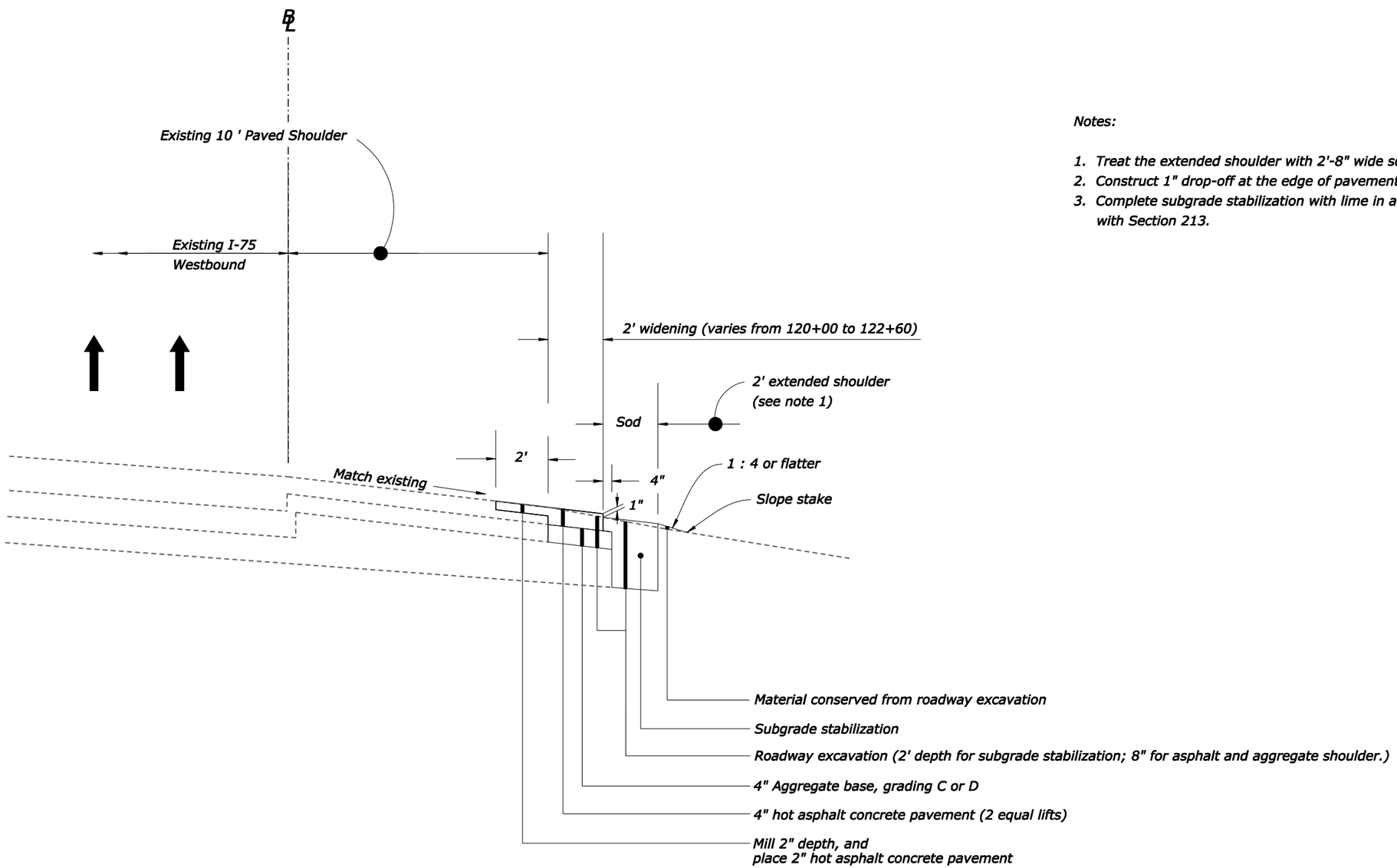

Notes:

1. *Treat the extended shoulder with 2'-8" wide sod treatment.*
2. *Construct 1" drop-off at the edge of pavement.*
3. *Complete subgrade stabilization with lime in accordance with Section 213.*

105+18 to 129+80

NOT TO SCALE

U.S. DEPARTMENT OF TRANSPORTATION
FEDERAL HIGHWAY ADMINISTRATION
EASTERN FEDERAL LANDS HIGHWAY DIVISION
STERLING, VIRGINIA

FLORIDA PANTHER
NATIONAL WILDLIFE REFUGE

TYPICAL SECTIONS

I-75 Shoulder Widening

6/19/2008 2:38:56 PM M:\Projects\refuge\fl\flp10(1)\proj_dev\CADD\00% plan\01-flp10(1)_typ.dgn

REG	STATE	PROJECT	SHEET NO.
SE	FL	FWS FLP 10(1)	B2

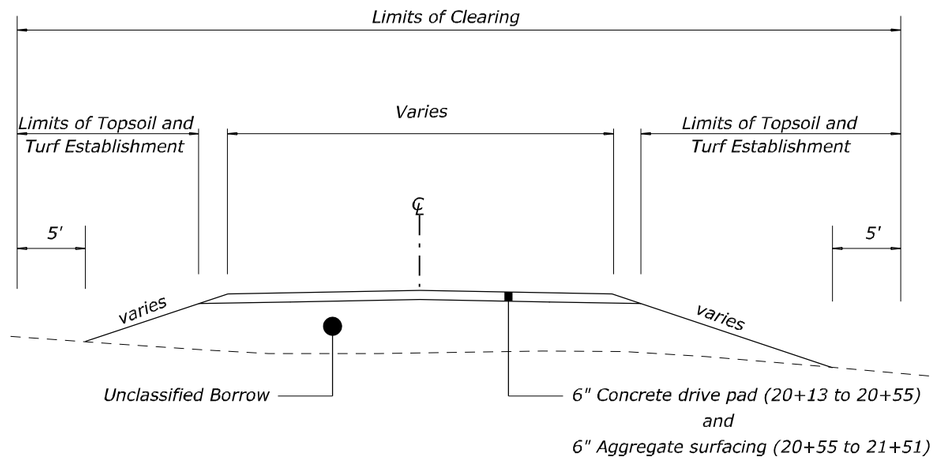

Entrance Road
20+13 to 21+51

Notes:

1. Prior to slide gate construction, provide shop drawings and details of proposed slide gate to the CO for approval. Proposed gate shall be similar to existing gate at 14041 State Route 29 South, Ammokalee, FL; just north of the I-75 and SR 29 intersection.

2. Construct concrete drive pad between 20+13 and 20+55 in accordance with Section 601. Construct concrete joints at intervals (i.e. longitudinal and transverse) not greater than 15'. See Detail 615-A.

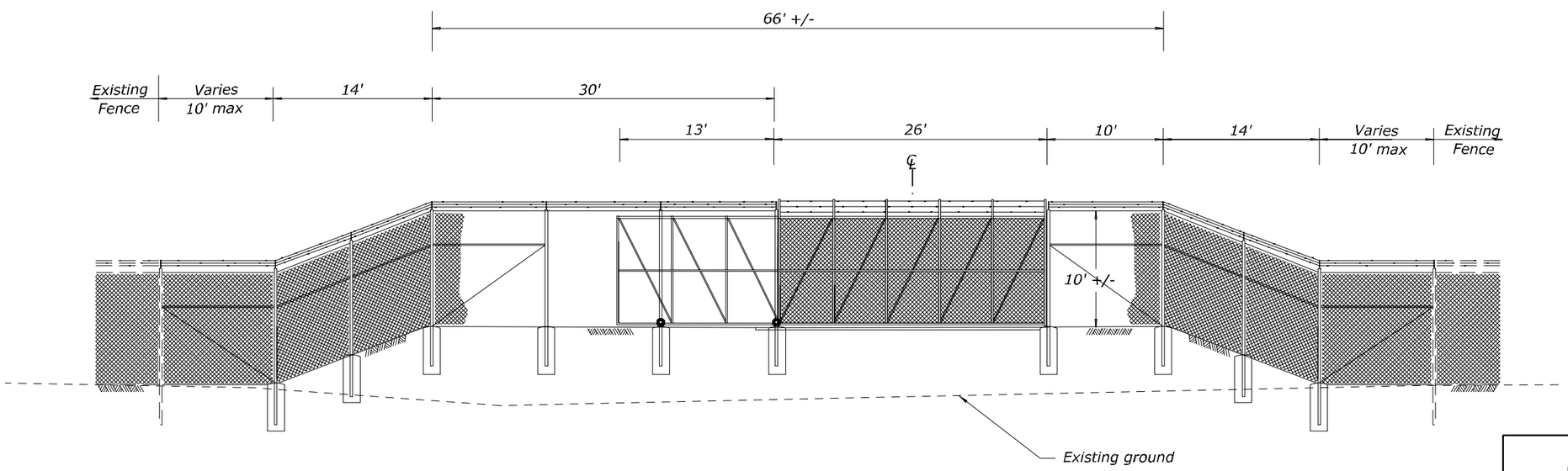

Entrance Road at Slide Gate

NOT TO SCALE

U.S. DEPARTMENT OF TRANSPORTATION
FEDERAL HIGHWAY ADMINISTRATION
EASTERN FEDERAL LANDS HIGHWAY DIVISION
STERLING, VIRGINIA

FLORIDA PANTHER
NATIONAL WILDLIFE REFUGE

TYPICAL SECTIONS

Entrance Road

4/30/2008 11:13:01 AM M:\Projects\refuge\f\flp10(1)\proj_dev\CADD\00% plan\01-flp10(1)_typ.dgn

REG	STATE	PROJECT	SHEET NO.
SE	FL	FWS FLP 10(1)	B3

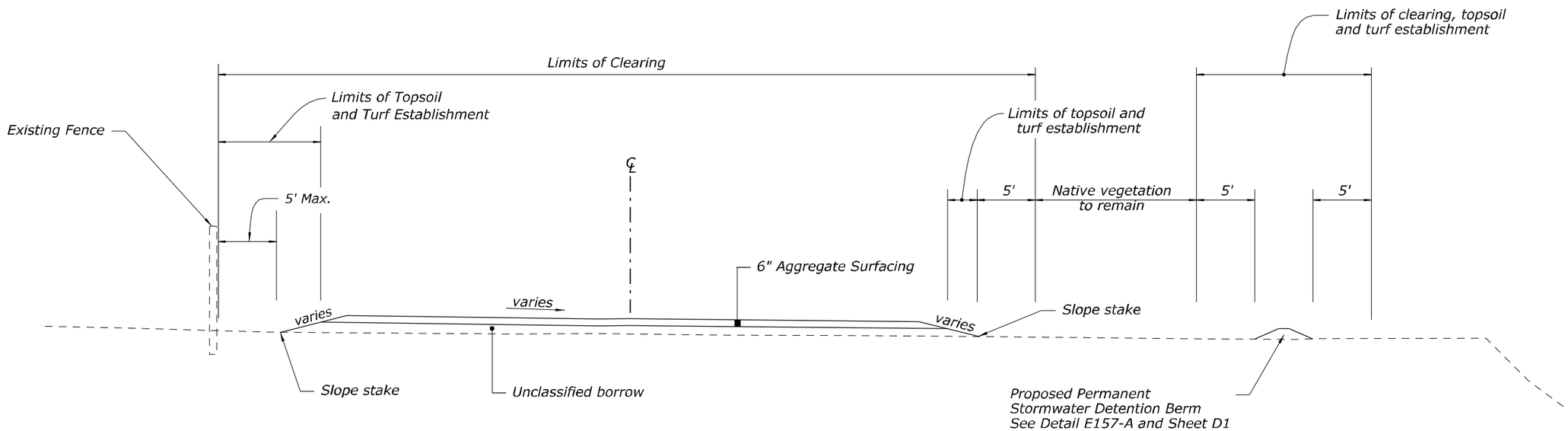

Permanent Staging Area
and
Access Road

10+25 to 13+76.5
14+68.5 to 15+81

NOT TO SCALE

U.S. DEPARTMENT OF TRANSPORTATION
FEDERAL HIGHWAY ADMINISTRATION
EASTERN FEDERAL LANDS HIGHWAY DIVISION
STERLING, VIRGINIA

FLORIDA PANTHER
NATIONAL WILDLIFE REFUGE

TYPICAL SECTIONS

Permanent Staging Area

4/30/2008 11:13:23 AM M:\Projects\refuge\f\flp10(1)\proj_dev\CADD\00% plan\01-flp10(1)_typ.dgn

REG	STATE	PROJECT	SHEET NO.
SE	FL	FWS-FLP 10(1)	C1

PLAN SHEET SECTION -------->>															ESTIMATED QUANTITIES	
ITEM	DESCRIPTION	UNIT													PLAN	BID SCHEDULE
15101-0000	MOBILIZATION	LPSM													ALL	ALL
15201-0000	CONSTRUCTION SURVEY AND STAKING	LPSM													ALL	ALL
15401-0000	CONTRACTOR TESTING	LPSM													ALL	ALL
15705-0100	SOIL EROSION CONTROL, SILT FENCE	LNFT	1350												1350	1,500
15706-1600	SOIL EROSION CONTROL, STABILIZED CONSTRUCTION ENTRANCE	EACH	1												1	1
20101-0000	CLEARING AND GRUBBING	ACRE	1.95												2.0	2.1
20302-0900	REMOVAL OF FENCE, CHAIN LINK	LNFT	114												114	120
20401-0000	ROADWAY EXCAVATION	CUYD	468												468	500
20403-0000	UNCLASSIFIED BORROW	CUYD	8000												8000	8,800
20443-0000	BERMS	LNFT	650												650	675
20701-1000	EARTHWORK GEOTEXTILE, TYPE III-A	SQYD	515												515	515
20801-0000	STRUCTURE EXCAVATION	CUYD	395												395	395
20803-0000	STRUCTURAL BACKFILL	CUYD	217												217	220
21301-0000	SUBGRADE STABILIZATION	SQYD	811												811	890
30101-4000	AGGREGATE BASE GRADING C OR D	TON	176												176	190
30110-0000	AGGREGATE SURFACE COURSE	TON	1856												1856	2,040
40301-0000	HOT ASPHALT CONCRETE PAVEMENT	TON	236												236	260
41301-0600	ASPHALT PAVEMENT MILLING, 2-INCH DEPTH	SQYD	547												547	600
55201-0200	STRUCTURAL CONCRETE, CLASS A (AE)	CUYD	27												27	27
55302-0600	PRECAST, PRESTRESSED CONCRETE BOX BEAM, TYPE B1-36	LNFT	460												460	460
55401-1000	REINFORCING STEEL	LB	3153												3153	3,153
55601-0900	BRIDGE RAILING, STEEL	LNFT	184												184	184
56401-1000	BEARING DEVICE, ELASTOMERIC	EACH	20												20	20
60510-0200	3-INCH OUTLET PIPE	LNFT	10												10	11
60520-0000	GRANULAR BACKFILL	CUYD	125												125	125
61502-1000	DRIVE PAD, CONCRETE	SQYD	346												346	380
61901-1300	FENCE, CHAIN LINK (TEMPORARY)	LNFT	120												120	120

U.S. DEPARTMENT OF TRANSPORTATION
FEDERAL HIGHWAY ADMINISTRATION
EASTERN FEDERAL LANDS HIGHWAY DIVISION
STERLING, VIRGINIA

FLORIDA PANTHER
NATIONAL WILDLIFE REFUGE

TABULATION OF QUANTITIES

4/30/2008 1:18:25 PM M:\Projects\refuge\fl\fl01\proj_dev\CADD\00% plan\C01-fl01_qnty.dgn

REG	STATE	PROJECT	SHEET NO.
SE	FL	FWS-FLP 10(1)	C2

PLAN SHEET SECTION -------->>

ITEM	DESCRIPTION	UNIT													ESTIMATED QUANTITIES PLAN	ESTIMATED QUANTITIES BID SCHEDULE
61901-2200	FENCE, CHAIN LINK, 120-INCH HEIGHT	LNFT	90												90	90
61902-2700	GATE, CHAIN LINK	EACH	1												1	1
62401-0100	FURNISHING AND PLACING TOPSOIL, 2-INCH DEPTH	SQYD	2760												2760	2,760
62502-0000	TURF ESTABLISHMENT	SQYD	2760												2760	2,760
62701-0000	SOD, SOLID	SQYD	659												659	700
63304-0900	SIGNS, ALUMINUM PANELS, TYPE 3 SHEETING	SQFT	5												5	5
63502-0300	TEMPORARY TRAFFIC CONTROL, ADVANCE WARNING ARROW PANEL, TYPE C	EACH	1												1	1
63502-0600	TEMPORARY TRAFFIC CONTROL, BARRICADE TYPE 3	EACH	2												2	2
63502-1300	TEMPORARY TRAFFIC CONTROL, DRUM	EACH	60												60	60
63504-1000	TEMPORARY TRAFFIC CONTROL, CONSTRUCTION SIGN	SQFT	326												326	326
63708-0000	CELLULAR PHONE SERVICE	MO	5												5	5

U.S. DEPARTMENT OF TRANSPORTATION
FEDERAL HIGHWAY ADMINISTRATION
EASTERN FEDERAL LANDS HIGHWAY DIVISION
STERLING, VIRGINIA

FLORIDA PANTHER
NATIONAL WILDLIFE REFUGE

TABULATION OF QUANTITIES

5/1/2008 2:14:50 PM M:\Projects\refuge\fl\fl\pl0(1)\proj_dev\CADD\00%_plan\C0i-fl\pl0(1)_qnty.dgn

REG	STATE	PROJECT	SHEET NO.
SE	FL	FWS-FLP 10(1)	C3

Detail No.	MUTCD NO.	SIGN TEXT	PANEL SIZE WIDTH (in)	PANEL SIZE HEIGHT (in)	PANEL SIZE AREA (sqft)	COLOR COMBINATION	QUANTITY	Pay Item 63504-1000 Temp. Traffic Control, Construction Signs Sqft	SUPPORT (NO PAY) ft	REMARKS
	G20-2	END ROAD WORK	48	24	8.00	Black on Orange	2	16	26	
	W4-2R	LANE ENDS	30	30	6.25	Black on Orange	2	13	26	
	W8-11	UNEVEN LANES	30	30	6.25	Black on Orange	2	13	26	
	W20-1	ROAD WORK 1 MILE	48	48	16.00	Black on Orange	2	32	26	
	W20-1	ROAD WORK 1/2 MILE	48	48	16.00	Black on Orange	2	32	26	
	W20-1	ROAD WORK AHEAD	48	48	16.00	Black on Orange	2	32	26	
	W8-11	UNEVEN LANES	30	30	6.25	Black on Orange	2	13	26	
	W20-5	RIGHT LANE CLOSED AHEAD	48	48	16.00	Black on Orange	4	64	52	
	MOT-6-04 Modified	TRUCKS EXITING HIGHWAY	48	48	16.00	Black on Orange	2	32	26	
	MOT-6-04	TRUCKS ENTERING HIGHWAY	48	48	16.00	Black on Orange	2	32	26	
	MOT-13-04	SPEEDING FINES DOUBLED WHEN WORKERS PRESENT	72	48	24.00	Black on White	2	48	26	
		Subtotal this Sheet			146.8		24	325.5	312	
		Rounded Total			*		*	326.0	*	

U.S. DEPARTMENT OF TRANSPORTATION
FEDERAL HIGHWAY ADMINISTRATION
EASTERN FEDERAL LANDS HIGHWAY DIVISION
STERLING, VIRGINIA

FLORIDA PANTHER NATIONAL WILDLIFE REFUGE

CONSTRUCTION SIGN SCHEDULE

4/30/2008 1:19:31 PM M:\Projects\refuge\fl\flp\011\proj_dev\CADD\00% plan\C02-flp011_qnty.dgn

REG	STATE	PROJECT	SHEET NO.
SE	FL	FWS-FLP 10(1)	C4

SHEET	LOCATION		MUTCD NO.	SIGN TEXT	PANEL SIZE			COLOR COMBINATION	QUANTITY	Pay Item 63304-0900	SUPPORT (NO PAY)	REMARKS
	STATION	OFFSET			WIDTH (in)	HEIGHT (in)	AREA (sqft)			Signs, Aluminium Panels, Type 3 Sheeting Sqft	ft	
D-1	111+30	10' Rt.		For Offical Use Only	24	30	5.00	Black on White	1	5	26	
				Subtotal this Sheet			5.0		1	5.0	26	
				Rounded Total			*		*		*	

* For information only

U.S. DEPARTMENT OF TRANSPORTATION
FEDERAL HIGHWAY ADMINISTRATION
EASTERN FEDERAL LANDS HIGHWAY DIVISION
STERLING, VIRGINIA

FLORIDA PANTHER NATIONAL WILDLIFE REFUGE

PERMANENT SIGN SCHEDULE

4/30/2008 1:20:13 PM M:\Projects\refuge\f\flp10(1)\proj_dev\CADD\00% plan\C04-flp10(1)_qnty.dgn

REG	STATE	PROJECT	SHEET No.
SE	FL	FWS-FLP 10(1)	D1

Notes:

1. Existing shoulder rumble strip and edge line stripe to remain throughout shoulder widening, as well as through access road opening.
2. Remove (approximately 100') of existing fence at 20+51 on entrance road as directed by the CO. Install sliding gate at the C/L of access road. See typical at B2.
3. Place a temporary chain link fence during non-working hours along removed fence until sliding gate is permanently installed and connected to existing fence. Take all precautions necessary to insure against entrance by livestock or unauthorized persons or vehicles.

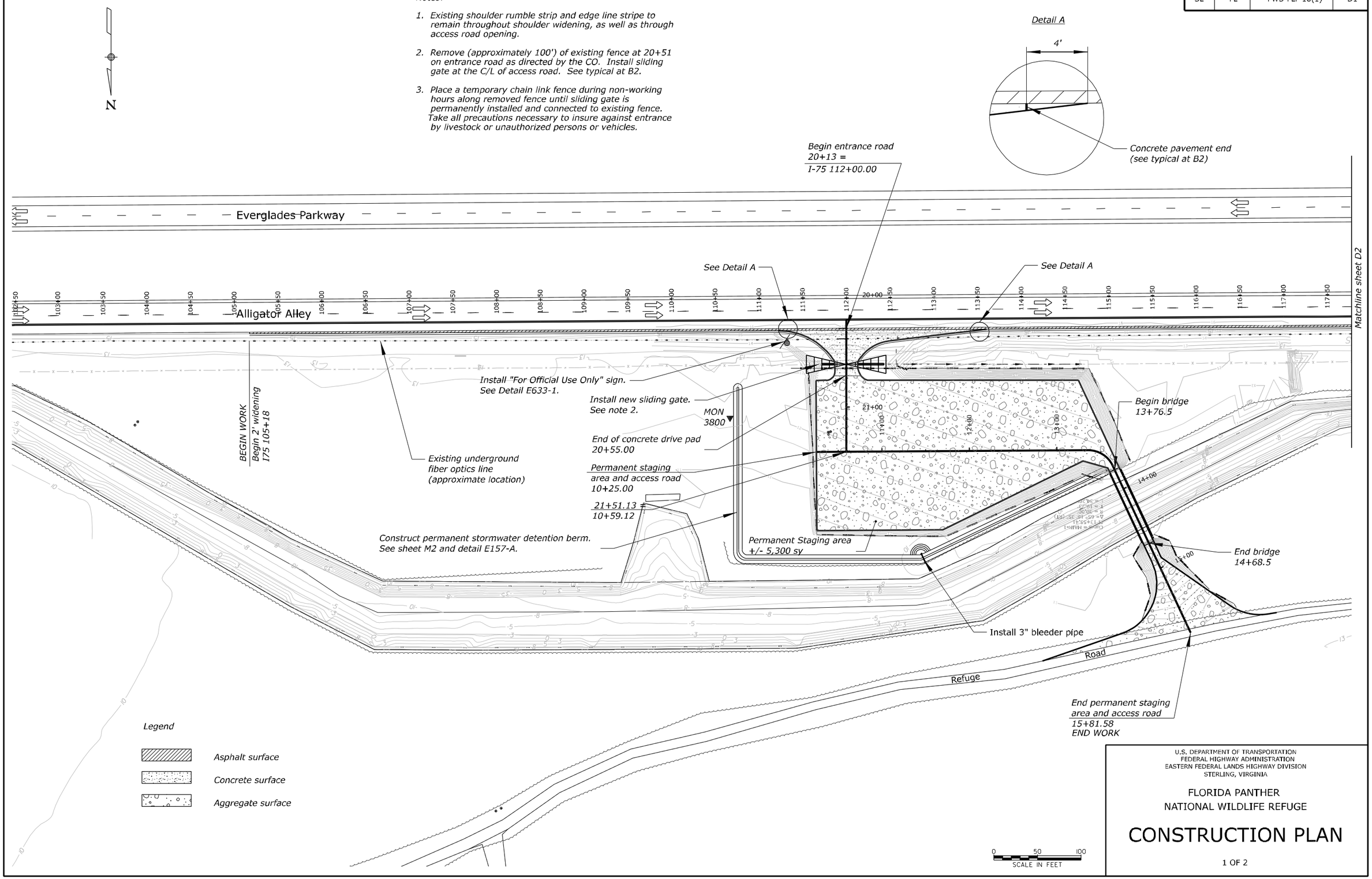

U.S. DEPARTMENT OF TRANSPORTATION
FEDERAL HIGHWAY ADMINISTRATION
EASTERN FEDERAL LANDS HIGHWAY DIVISION
STERLING, VIRGINIA

FLORIDA PANTHER
NATIONAL WILDLIFE REFUGE

CONSTRUCTION PLAN

1 OF 2

5/1/2008 2:18:30 PM M:\Projects\refuge\f\flp\0\1\proj_dev\CADD\100% plan\D01-flp\01_pln.dgn

REG	STATE	PROJECT	SHEET No.
SE	FL	FWS-FLP 10(1)	D2

Notes:

1. *Existing shoulder rumble strip and edge line stripe to remain throughout shoulder widening, as well as through access road opening.*

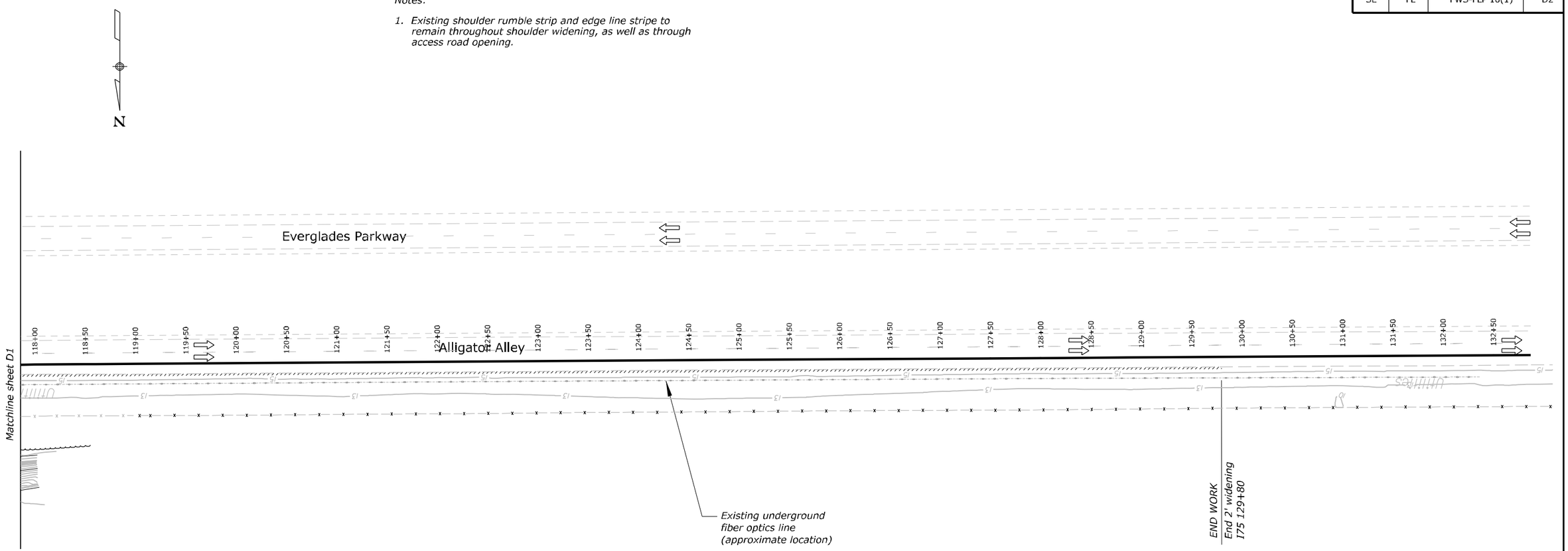

Legend

- *Asphalt surface*
- *Concrete surface*
- *Aggregate surface*

0 50 100
SCALE IN FEET

U.S. DEPARTMENT OF TRANSPORTATION
FEDERAL HIGHWAY ADMINISTRATION
EASTERN FEDERAL LANDS HIGHWAY DIVISION
STERLING, VIRGINIA

FLORIDA PANTHER
NATIONAL WILDLIFE REFUGE

CONSTRUCTION PLAN

2 OF 2

4/30/2008 1:22:37 PM M:\Projects\refuge\fl\flp10(1)\proj_dev\CADD\100% plan\D02-flp10(1)_pln.dgn

REG	STATE	PROJECT	SHEET NO.
SE	FL	FWS-FLP 10(1)	D3

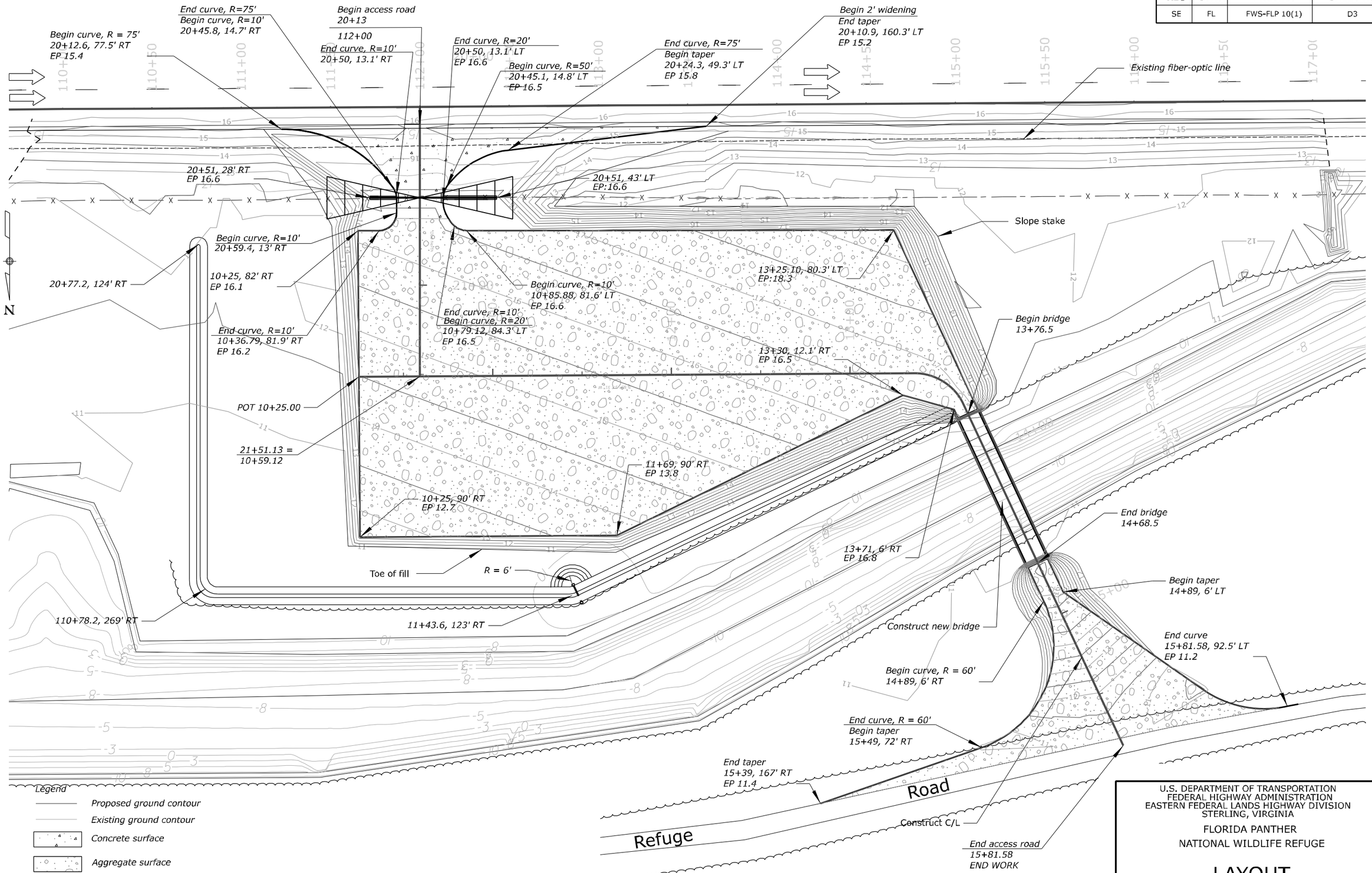

Note:
1. EP refers to finished surface elevation of the edge of pavement, or aggregate surface.

U.S. DEPARTMENT OF TRANSPORTATION
FEDERAL HIGHWAY ADMINISTRATION
EASTERN FEDERAL LANDS HIGHWAY DIVISION
STERLING, VIRGINIA

FLORIDA PANTHER
NATIONAL WILDLIFE REFUGE

LAYOUT

5/1/2008 3:02:43 PM:\Projects\refuge\fl\flpl0(1)\proj_dev\CADD\00% plan\D03-flpl0(1)_pln.dgn

REG	STATE	PROJECT	SHEET NO.
SE	FL	FWS-FLP 10(1)	D4

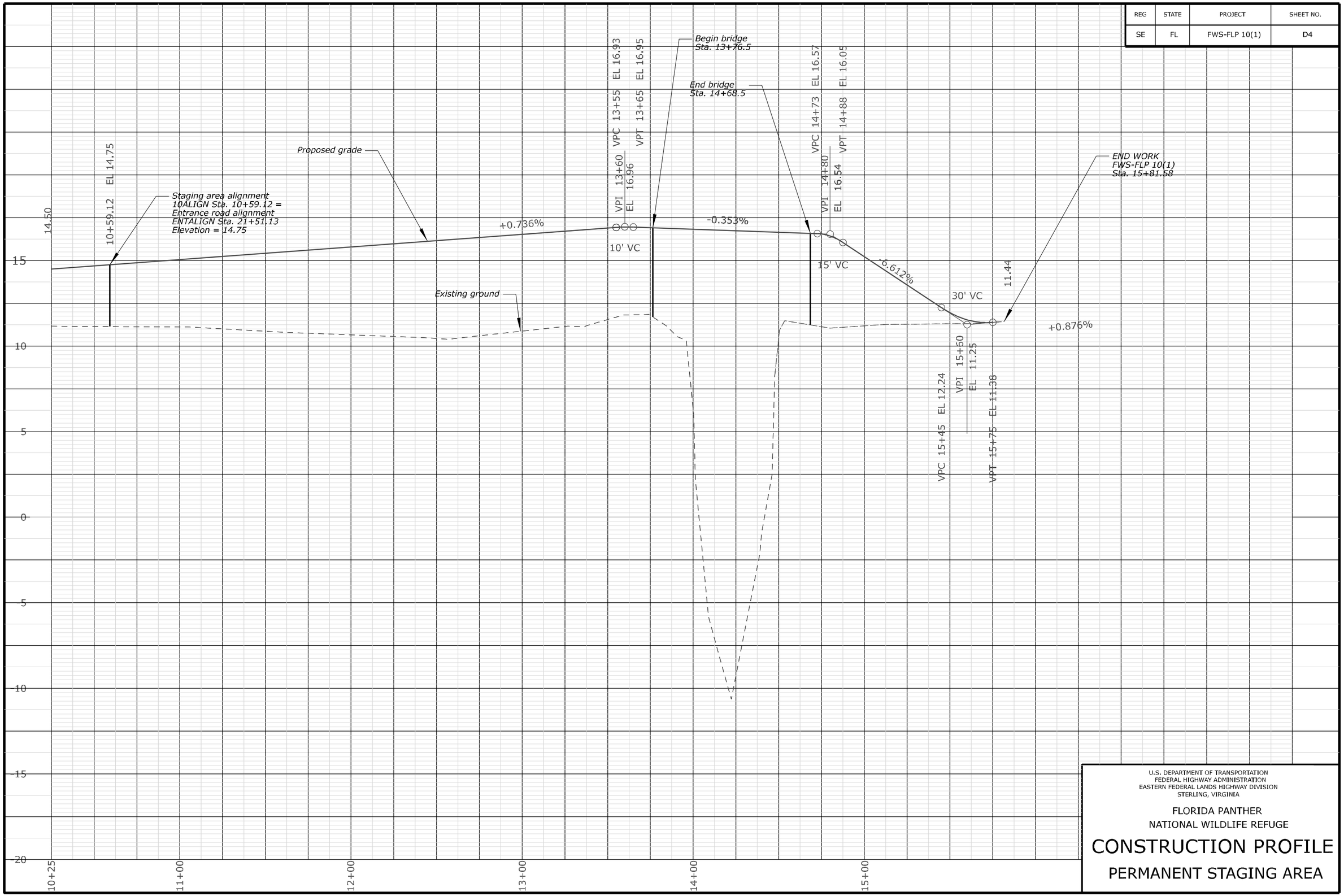

U.S. DEPARTMENT OF TRANSPORTATION
FEDERAL HIGHWAY ADMINISTRATION
EASTERN FEDERAL LANDS HIGHWAY DIVISION
STERLING, VIRGINIA

FLORIDA PANTHER
NATIONAL WILDLIFE REFUGE

CONSTRUCTION PROFILE

PERMANENT STAGING AREA

4/30/2008 1:23:21 PM V:\Projects\refuge\fl\flp10(1)\proj_dev\CADD\100% plan\D04-flp10(1)_pro_sht.dgn

REG	STATE	PROJECT	SHEET NO.	TOTAL SHEETS
SE	FL	FWS-FLP 10(1)	D5	

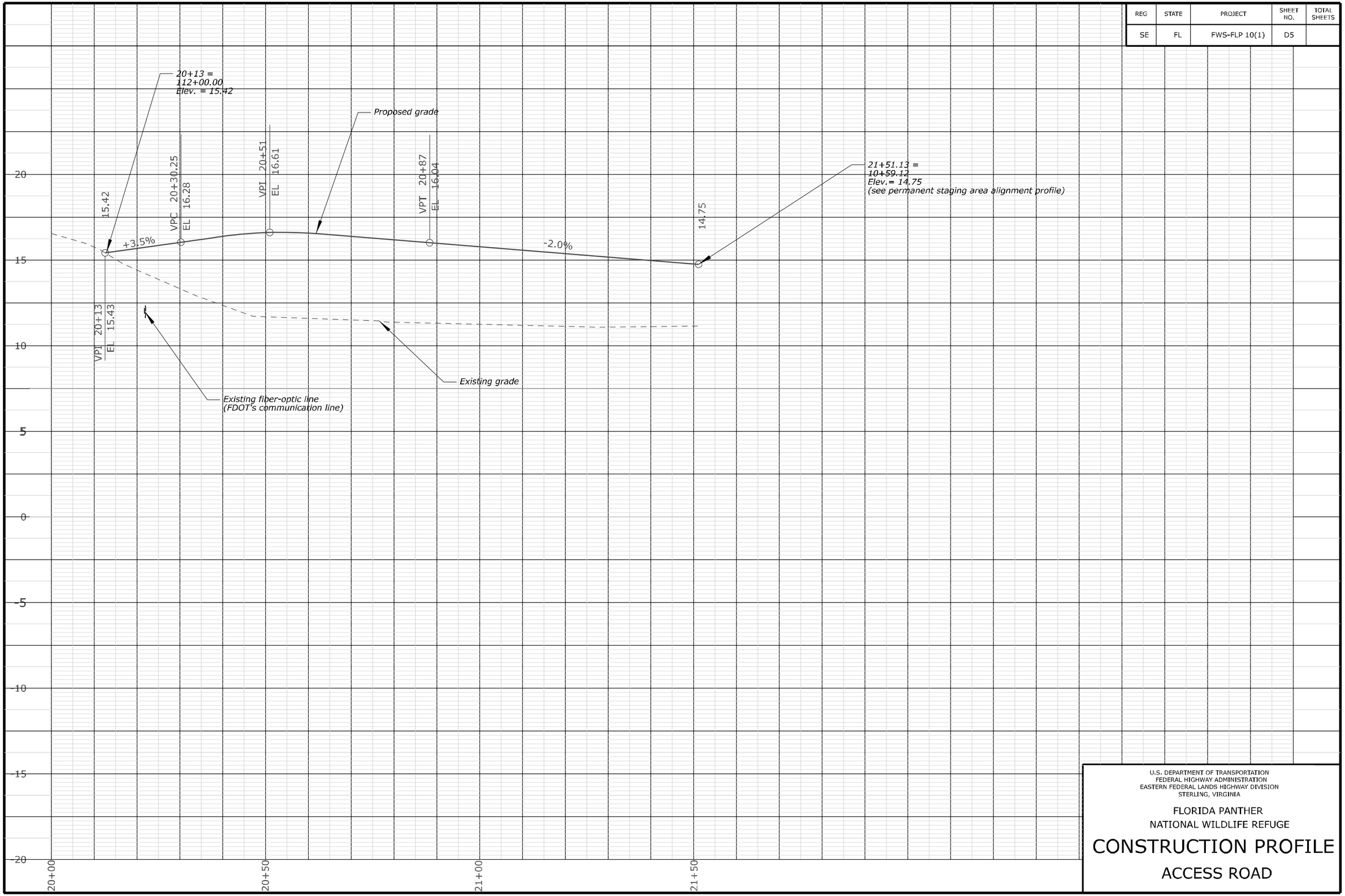

U.S. DEPARTMENT OF TRANSPORTATION
FEDERAL HIGHWAY ADMINISTRATION
EASTERN FEDERAL LANDS HIGHWAY DIVISION
STERLING, VIRGINIA

FLORIDA PANTHER
NATIONAL WILDLIFE REFUGE

CONSTRUCTION PROFILE

ACCESS ROAD

5/1/2008 3:56:52 PM

REG	STATE	PROJECT	SHEET NO.
SE	FL	FWS-FLP 10(1)	M1

EROSION CONTROL NARRATIVE

1. GENERAL GUIDELINES

The Erosion Control Plans (ECP) are meant as a guideline for preventing erosion and controlling sediment. The work outlined in this narrative consists of applying measures throughout the life of the project to control erosion and minimize the sedimentation of rivers, streams, and impoundment such as lakes, reservoirs, bays and coastal waters. The measures consist of stabilization and structural practices, storm water controls and other miscellaneous pollution prevention controls.

Coordinate the installation, use and removal of erosion and sediment control measures with bridge and roadway construction activities to assure economical, effective and continuous erosion and sediment control. Employ temporary stabilization practices in incremental stages as construction proceeds.

Install all erosion and sediment control measures as shown in the ECP or as directed by the Contracting Officer (CO). Do not modify the type, size or location of any control or practice without approval from the CO.

Preventing initial soil erosion is much more effective than trying to control eroded sediment. Therefore, stabilize all disturbed areas as soon as is practical, but no more than 7 days after construction activity has temporarily or permanently ceased.

Control only sediment-laden and runoff generated by the project site. Separate and quickly route clean, offsite runoff through the project by using sand bags, diversion channels, and other approved measures.

Inspect (by qualified inspector approved by the CO) all points of discharge into surface waters of the State or a municipal storm sewer system; distrubed areas of the construction site that have not been finally stabilized; areas used for storage of materials that are exposed to precipitation; structural controls; and, locations where vehicles enter or exit the site, at least once every 7 days and within 24 hours of the end of a storm that is 0.50 inchesor greater.

Do not drive construction equipment across flowing waterways.

Do not allow construction vehicles to track sediment offsite of the project limits.

In general, preserve existing vegetation, trees and shrubs when possible, and where specifically shown in the landscaping plans or as directed by the CO.

2. SITE DESCRIPTION

A. NATURE OF ACTIVITY
This project consists of shoulder widening along I-75, construction of a single-lane bridge carrying the limited access road, a permanent staging area, and other miscellaneous work in the Florida Panther National Wildlife Refuge in Collier County, Florida.

B. SEQUENCE OF CONSTRUCTION

* PHASE I (ESTABLISH PERIMETER CONTROLS):
Prior to any construction or staging, construct stabilized construction entrances as shown in the ECP or as directed by the CO.

Install protective fencing to preserve existing vegetation, trees and shrubs when possible, and where specifically shown in the landscaping plans or as directed by the CO.

Prior to any clearing, grubbing and excavation, construct perimeter controls to ensure that disturbed sediment does not leave the project site. Perimeter controls include silt fence, check dams, and other approved measures outside the construction limits. Do not line, with plastic, those portions of the diversion channels that run along natural streambeds.

* PHASE II (INTERMEDIATE CONTROLS/STABILIZATION):
Apply intermediate controls during rough grading operations. Obtain the CO's approval before installing any controls not specified in the ECP. The CO may direct the installation of certain controls in order to forestall or mitigate potential or existing erosion problems.

Apply temporary turf establishment on uncompleted disturbed areas that will remain exposed for over 14 calendar days or as directed by the CO.

At the end of each day's grading operations, shape earthwork to minimize and control erosion from storm runoff.

When directed by the CO, apply temporary mulch to all disturbed slopes at the end of each day's grading operations.

Do not allow ponded water to encroach into travel lanes.

Provide silt fence around all stockpiled excavated roadway material. Apply temporary turf establishment to stockpiles remaining in place longer than 14 days or when directed by the CO.

* PHASE III (FINAL CONTROLS/STABILIZATION):
After completion of roadway construction and landscaping do the following as directed by the CO:

Finish grading and apply permanent turf establishment to any remaining disturbed area.

Where necessary, replace eroded topsoil and reapply permanent turf establishment to disturbed areas where vegetation has not established.

Remove silt fence only after all upslope areas are stabilized and vegetation is well established.

Remove all other perimeter controls when directed by the CO.

C. SITE INFORMATION

* LOCATION OF SITE:

Latitude: 26 deg. 9' 13" Longitude: 81 deg. 28' 39"

* TOTAL AREA OF SITE:
Within the right of way limits including easements: 4.13 Acres

* TOTAL DISTURBED AREA:
Within the limits of construction including slope rounding and bridge: 1.46 Acres

* POST DEVELOPMENT RUNOFF COEFFICIENT FOR THE SITE:
The weighted, overall post development runoff coefficient will be: C = 0.9

* NAME(S) OF RECEIVING WATERS:
Runoff from the project drains directly into an unnamed canal.

3. LIST OF STABILIZATION PRACTICES

A. TEMPORARY
Temporary stabilization practices used on this project include preservation of existing vegetation, silt fence, and other approved measures.

B. PERMANENT
Permanent stabilization practices used on this project include permanent seeding, preservation of existing vegetation, and construction of stormwater detention berms.

4. LIST OF STRUCTURAL PRACTICES

Structural practices used on this project include detention berms, silt fence, and other approved measures.

U.S. DEPARTMENT OF TRANSPORTATION
FEDERAL HIGHWAY ADMINISTRATION
EASTERN FEDERAL LANDS HIGHWAY DIVISION
STERLING, VIRGINIA

FLORIDA PANTHER
NATIONAL WILDLIFE REFUGE

EROSION AND SEDIMENT CONTROL PLAN

4/30/2008 1:24:50 PM M:\Projects\refuge\fl\flpl01\proj_dev\CADD\00% plan\M01-flpl01l_ecn.dgn

REG	STATE	PROJECT	SHEET NO.
SE	FL	FWS-FLP 10(1)	M2

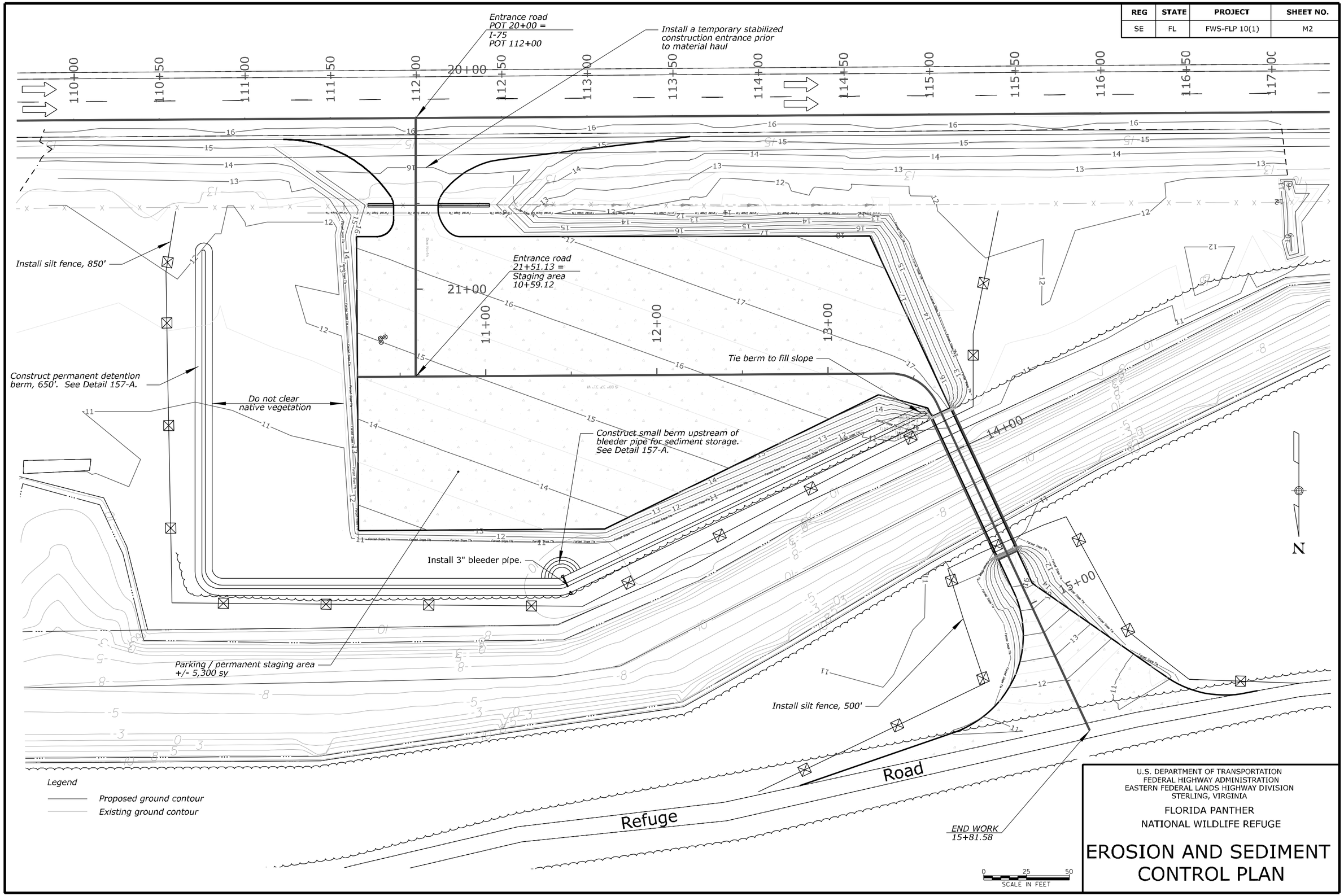

U.S. DEPARTMENT OF TRANSPORTATION
FEDERAL HIGHWAY ADMINISTRATION
EASTERN FEDERAL LANDS HIGHWAY DIVISION
STERLING, VIRGINIA

FLORIDA PANTHER
NATIONAL WILDLIFE REFUGE

EROSION AND SEDIMENT CONTROL PLAN

4/30/2008 1:25:06 PM M:\Projects\refuge\fl\flp10(1)\proj_dev\CADD\100% plan\M01-flp10(1)_ecn.dgn

REG	STATE	PROJECT	SHEET No.
SE	FL	FWS-FLP 10(1)	N1

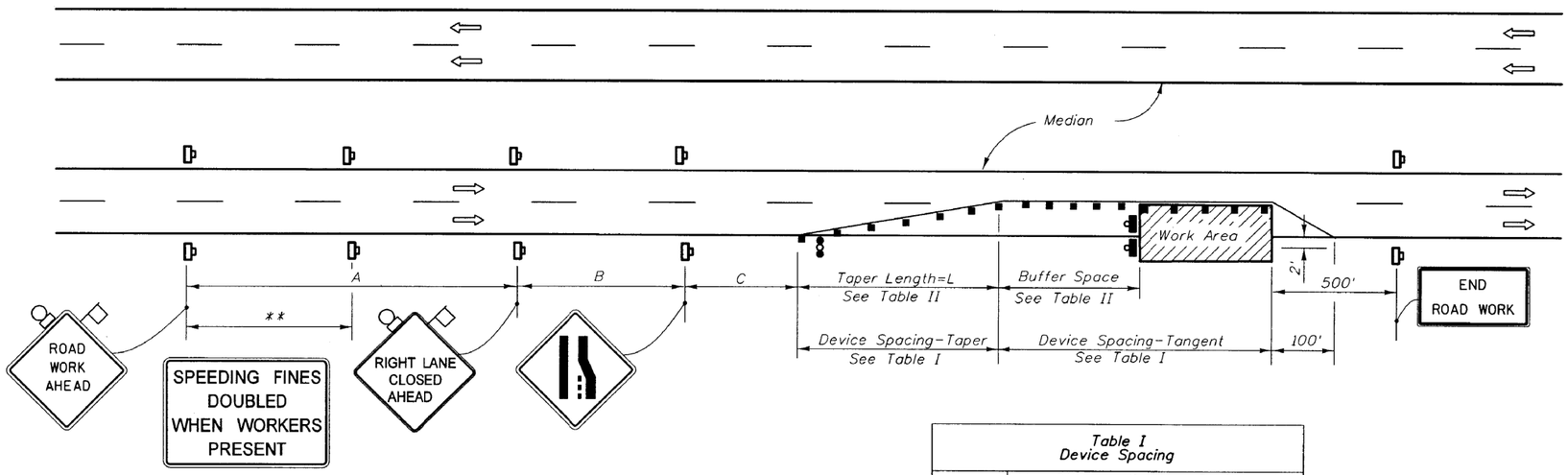

Table II Buffer Space and Taper Length			
Speed (mph)	Buffer Space Dist. (ft.)	Taper Length (12' Lateral Transition) L (ft.)	Notes (Merge)
25	155	125	$L=\frac{WS^2}{60}$
30	200	180	
35	250	245	
40	305	320	
45	360	540	L=WS
50	425	600	
55	495	660	
60	570	720	
65	645	780	
70	730	840	

When Buffer Space cannot be attained due to geometric constraints, the greatest attainable length shall be used, but not less than 200 ft.

For lateral transitions other than 12', use formula for L shown in the notes column.
Where:
L= Length of taper in feet
W= Width of lateral transition in feet
S= Posted speed limit (mph)

Table I Device Spacing				
Speed (mph)	Max. Distance Between Devices (ft.)			
	Cones or Tubular Markers		Type I or Type II Barricades or Vertical Panels or Drums	
	Taper	Tangent	Taper	Tangent
25	25	50	25	50
30 to 45	25	50	30	50
50 to 70	25	50	50	100

DISTANCE BETWEEN SIGNS			
Speed	Spacing (ft.)		
	A	B	C
40 mph or less	200	200	200
45 mph	350	350	350
50 mph	500	500	500
*55 mph or greater	2640	1640	1000

* The ROAD WORK 1 MILE sign may be used as an alternate to the ROAD WORK AHEAD sign and the RIGHT LANE CLOSED ½ MILE sign may be used as an alternate to the RIGHT LANE CLOSED AHEAD sign.

** 500' beyond the ROAD WORK AHEAD sign or midway between signs whichever is less.

GENERAL NOTES

1. Perform shoulder widening operations along I-75 between sta. 105+18 and sta. 129+80 under a one-lane closure of I-75. Lane closure for the shoulder widening operations is permitted between 10 PM and 6 AM. All lanes shall remain open at all other times.
2. Work operations shall be confined to one traffic lane, leaving the adjacent lane open to traffic.
3. Signs and traffic control devices are to be modified in accordance with INTERMITTENT WORK STOPPAGE details (see sheet N2) when no work is being performed and the highway is open to traffic.
4. The two channelizing devices directly in front of the work area may be omitted provided vehicles in the work area have high-intensity rotating, flashing, oscillating, or strobe lights operating.

SYMBOLS

Work Area

Sign With 18"x 18" (Min.) Orange Flag And Type B Light

Channelizing Device **(Drums)**

Type I Type II Or Type III Barricade Or Vertical Panel Or Drum (With Flashing Light)

Work Zone Sign

Advance Warning Arrow Panel

NOT TO SCALE

U.S. DEPARTMENT OF TRANSPORTATION
FEDERAL HIGHWAY ADMINISTRATION
EASTERN FEDERAL LANDS HIGHWAY DIVISION
STERLING, VIRGINIA

FLORIDA PANTHER
NATIONAL WILDLIFE REFUGE

TRAFFIC CONTROL PLAN

6/19/2008 2:00:57 PM M:\Projects\refuge\fl\flpl0(1)\proj_dev\CADD\00% plan\N01-flpl0(1)_tcp.dgn

REG	STATE	PROJECT	SHEET No.
SE	FL	FWS-FLP 10(1)	N2

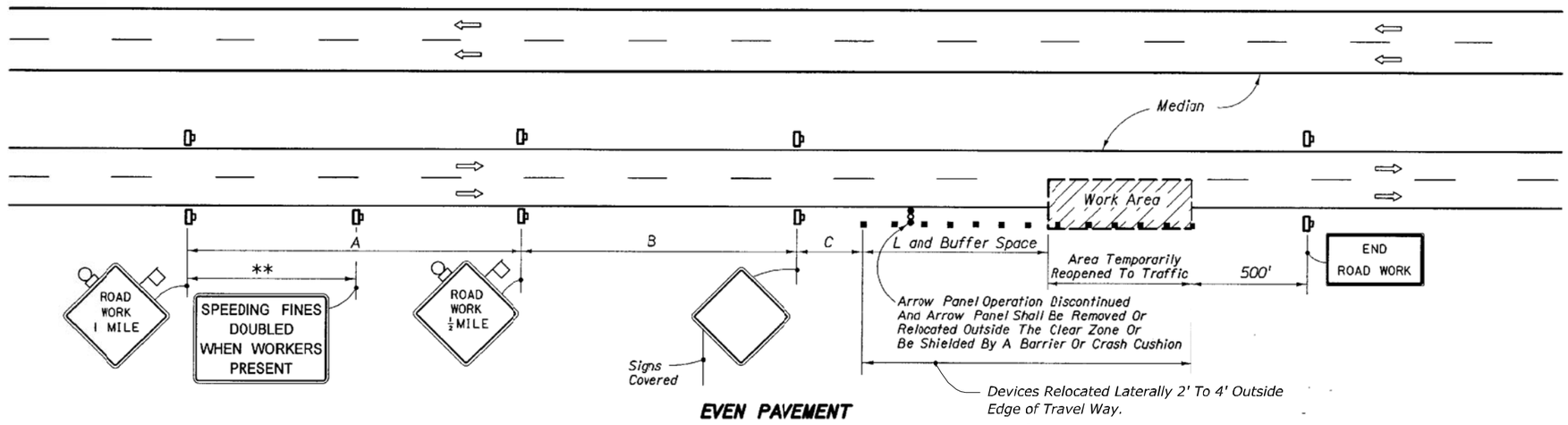

EVEN PAVEMENT

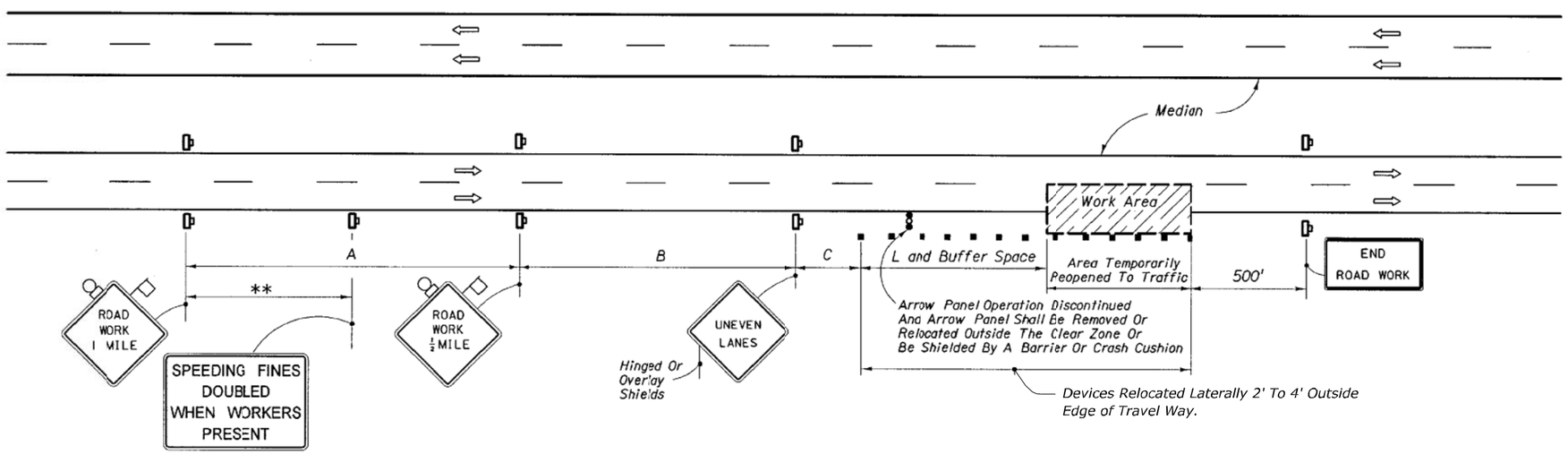

UNEVEN PAVEMENT

INTERMITTENT WORK STOPPAGE - LANE REOPENED TO TRAFFIC

NOT TO SCALE

U.S. DEPARTMENT OF TRANSPORTATION
FEDERAL HIGHWAY ADMINISTRATION
EASTERN FEDERAL LANDS HIGHWAY DIVISION
STERLING, VIRGINIA

FLORIDA PANTHER
NATIONAL WILDLIFE REFUGE

TRAFFIC CONTROL PLAN

4/30/2008 1:26:26 PM M:\Projects\refuge\f\flp01\proj_dev\CADD\002_plan\N01-flp01_tcp.dgn

REG	STATE	PROJECT	SHEET NO.
SE	FL	FWS-FLP 10(1)	Q1

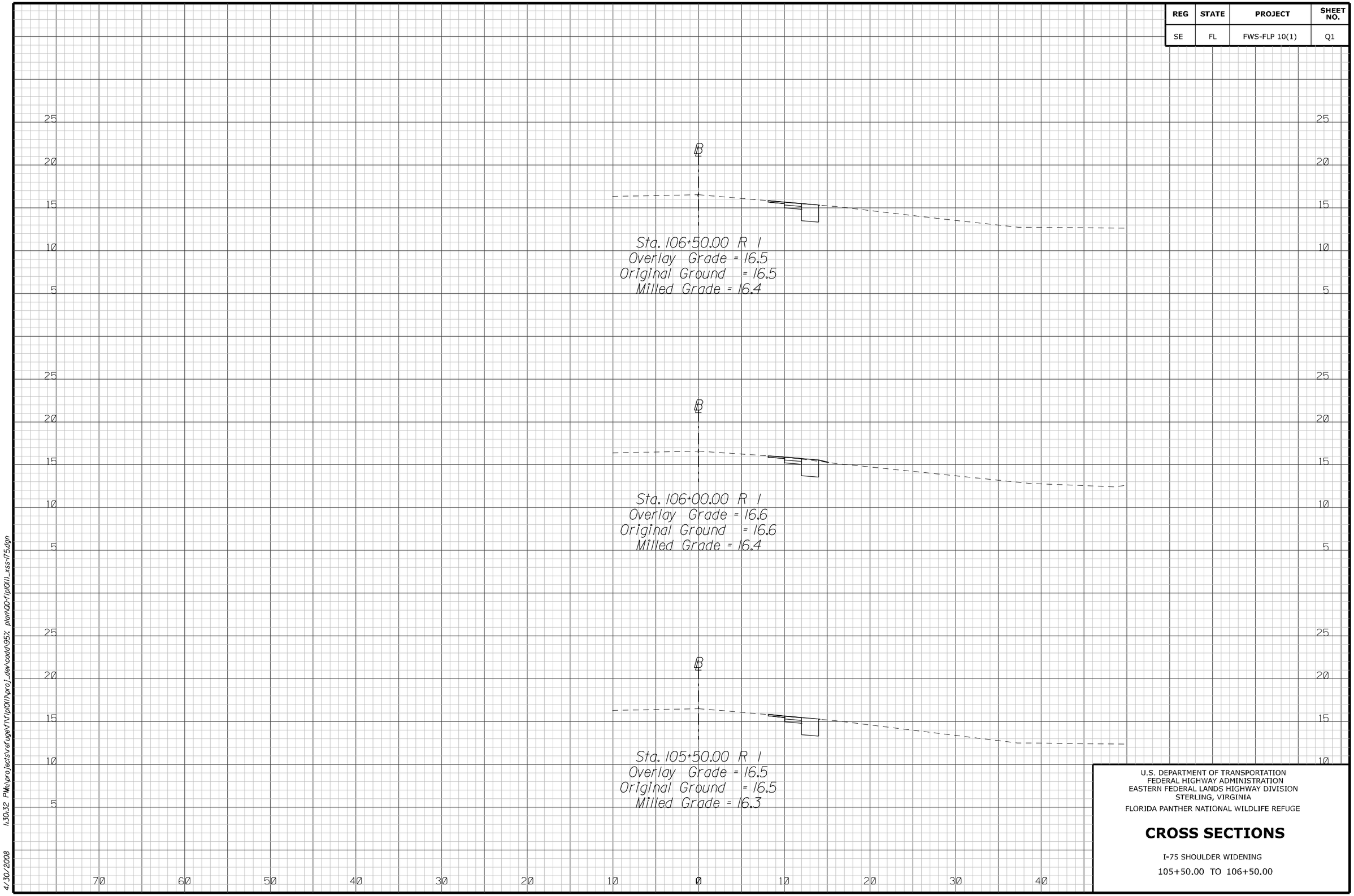

U.S. DEPARTMENT OF TRANSPORTATION
FEDERAL HIGHWAY ADMINISTRATION
EASTERN FEDERAL LANDS HIGHWAY DIVISION
STERLING, VIRGINIA

FLORIDA PANTHER NATIONAL WILDLIFE REFUGE

CROSS SECTIONS

I-75 SHOULDER WIDENING

105+50.00 TO 106+50.00

4/30/2008 1:30:32 PM h:\projects\refuge\fl\flp10(1)\proj_dev\cadd\95% plan\00-flp10(1)_xss-175.dgn

REG	STATE	PROJECT	SHEET NO.
SE	FL	FWS-FLP 10(1)	Q2

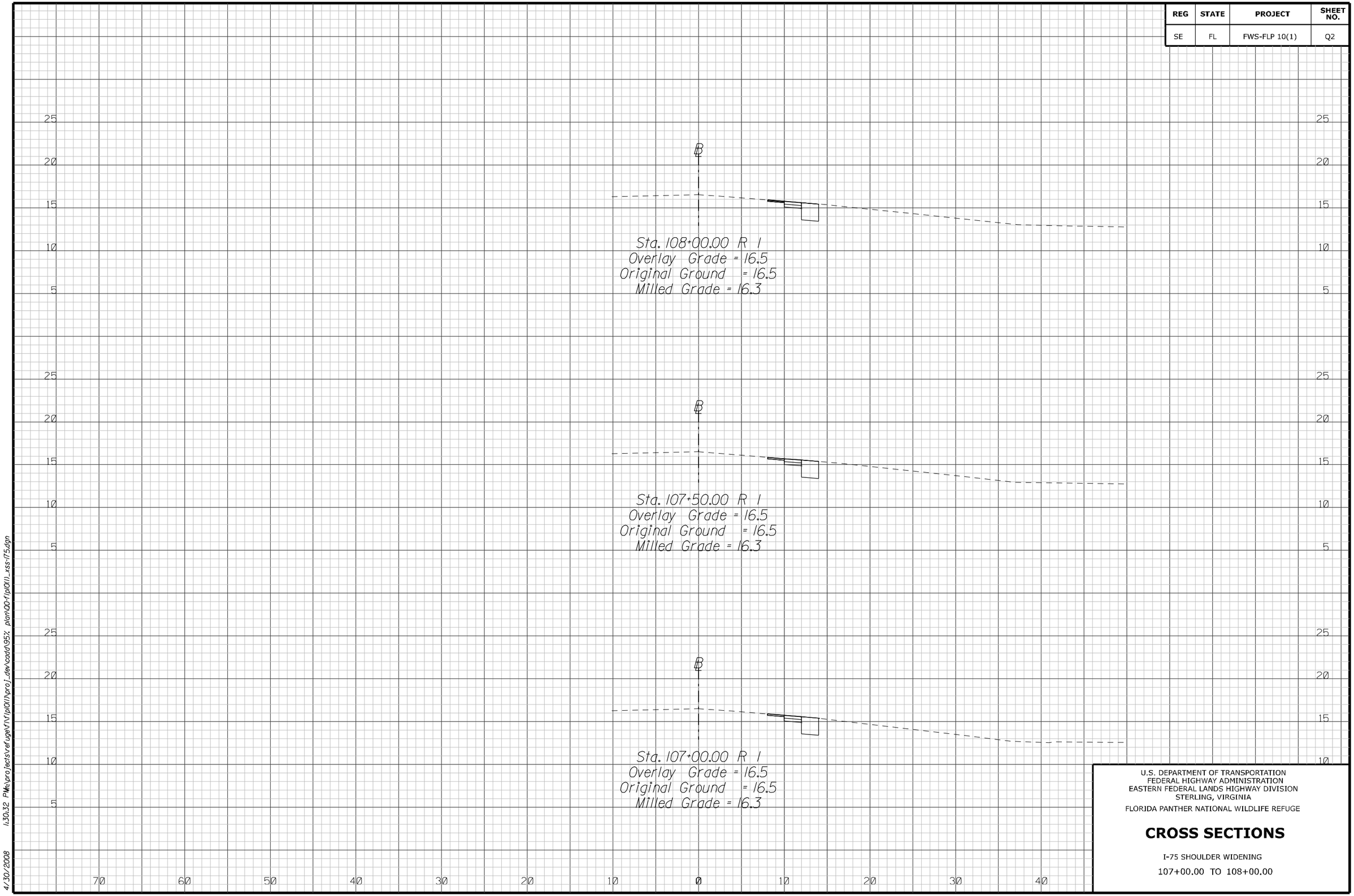

U.S. DEPARTMENT OF TRANSPORTATION
FEDERAL HIGHWAY ADMINISTRATION
EASTERN FEDERAL LANDS HIGHWAY DIVISION
STERLING, VIRGINIA

FLORIDA PANTHER NATIONAL WILDLIFE REFUGE

CROSS SECTIONS

I-75 SHOULDER WIDENING

107+00.00 TO 108+00.00

4/30/2008 1:30:32 PM h:\projects\refuge\fl\flp10(1)\proj_dev\cadd\95%_plan\00-flp10(1)_xss-175.dgn

REG	STATE	PROJECT	SHEET NO.
SE	FL	FWS-FLP 10(1)	Q3

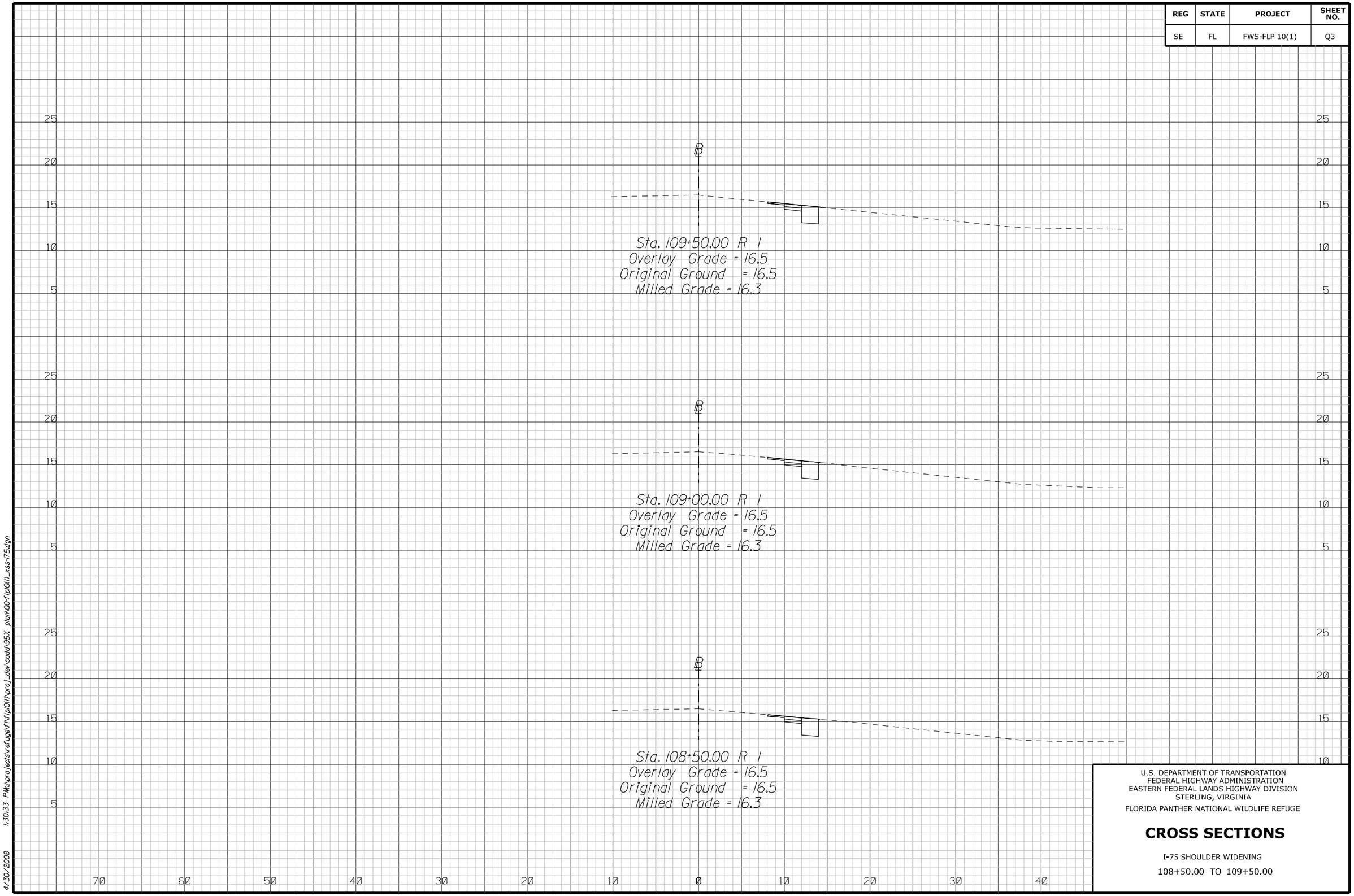

U.S. DEPARTMENT OF TRANSPORTATION
FEDERAL HIGHWAY ADMINISTRATION
EASTERN FEDERAL LANDS HIGHWAY DIVISION
STERLING, VIRGINIA

FLORIDA PANTHER NATIONAL WILDLIFE REFUGE

CROSS SECTIONS

I-75 SHOULDER WIDENING

108+50.00 TO 109+50.00

4/30/2008 1:30:33 PM h:\projects\refuge\fl\flp10(1)\proj_dev\cadd\95% plan\00-flp10(1)_xss-175.dgn

REG	STATE	PROJECT	SHEET NO.
SE	FL	FWS-FLP 10(1)	Q4

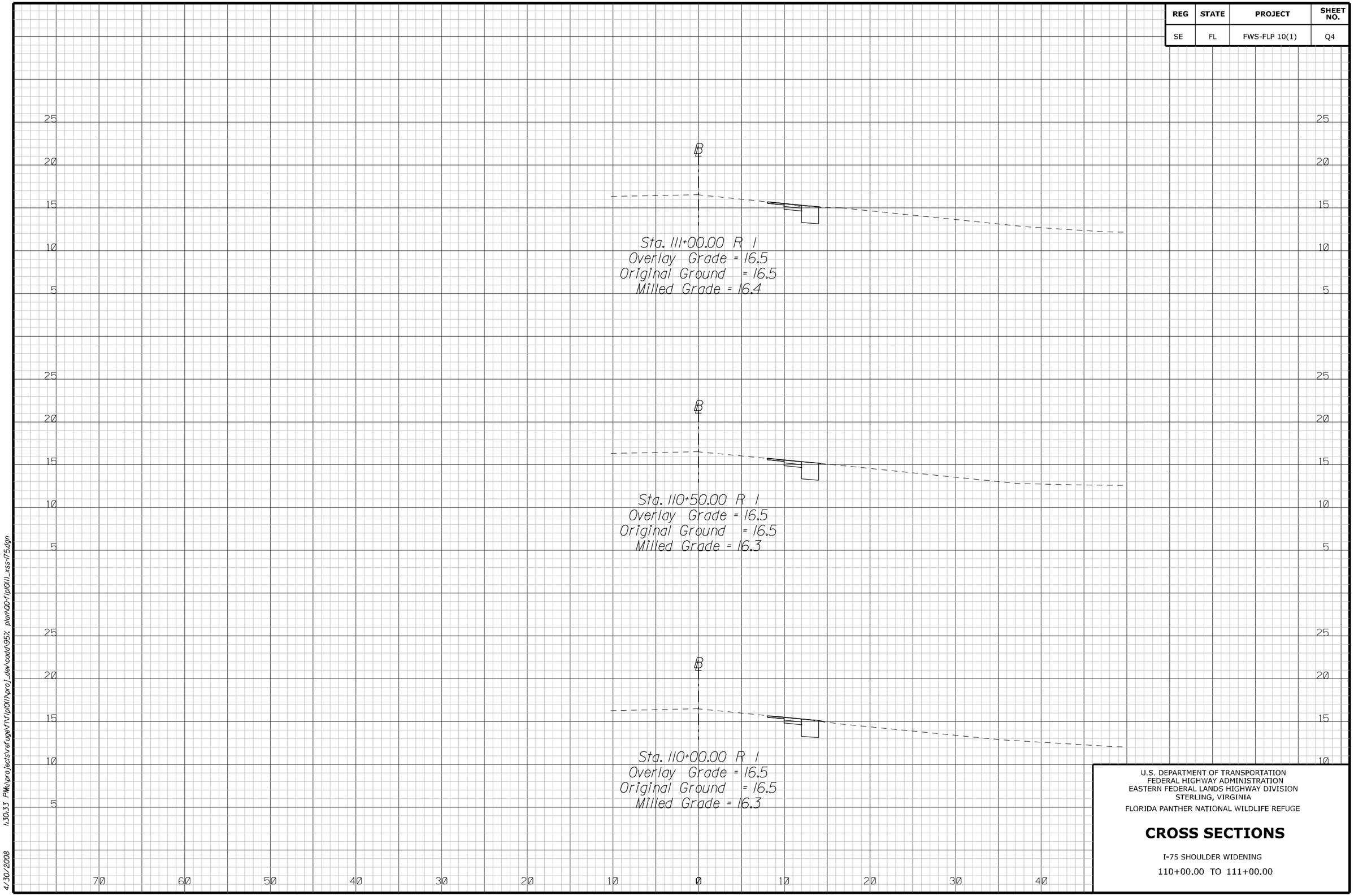

U.S. DEPARTMENT OF TRANSPORTATION
FEDERAL HIGHWAY ADMINISTRATION
EASTERN FEDERAL LANDS HIGHWAY DIVISION
STERLING, VIRGINIA

FLORIDA PANTHER NATIONAL WILDLIFE REFUGE

CROSS SECTIONS

I-75 SHOULDER WIDENING

110+00.00 TO 111+00.00

4/30/2008 1:30:33 PM h:\projects\refuge\fl\flp10(1)\proj_dev\cadd\95% plan\00-flp10(1)_xss-175.dgn

REG	STATE	PROJECT	SHEET NO.
SE	FL	FWS-FLP 10(1)	Q5

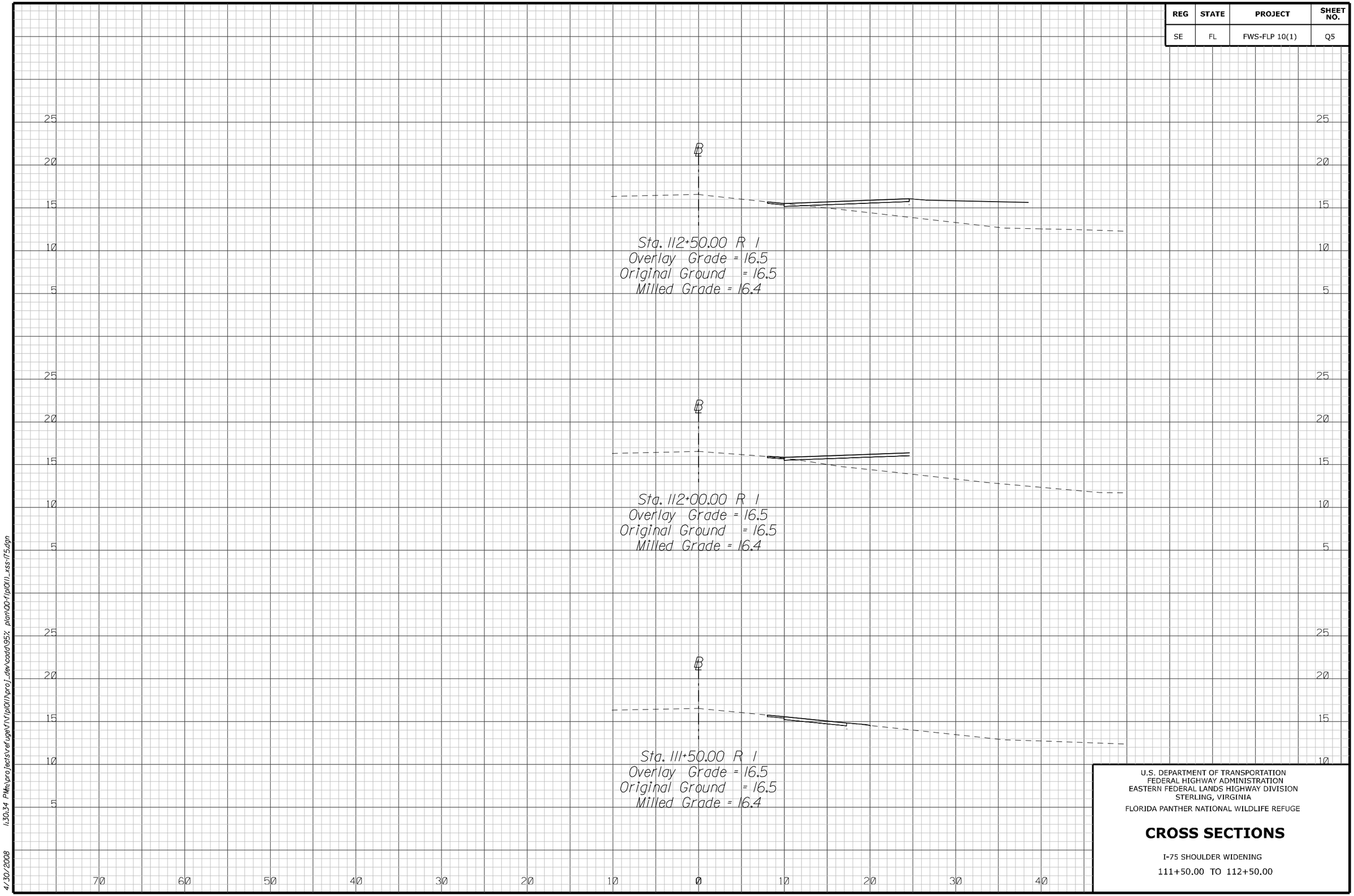

U.S. DEPARTMENT OF TRANSPORTATION
FEDERAL HIGHWAY ADMINISTRATION
EASTERN FEDERAL LANDS HIGHWAY DIVISION
STERLING, VIRGINIA

FLORIDA PANTHER NATIONAL WILDLIFE REFUGE

CROSS SECTIONS

I-75 SHOULDER WIDENING

111+50.00 TO 112+50.00

4/30/2008 1:30:34 PM n:\projects\refuge\fl\flp10(1)\proj_dev\cadd\95%_plan\00-flp10(1)_xss-175.dgn

REG	STATE	PROJECT	SHEET NO.
SE	FL	FWS-FLP 10(1)	Q6

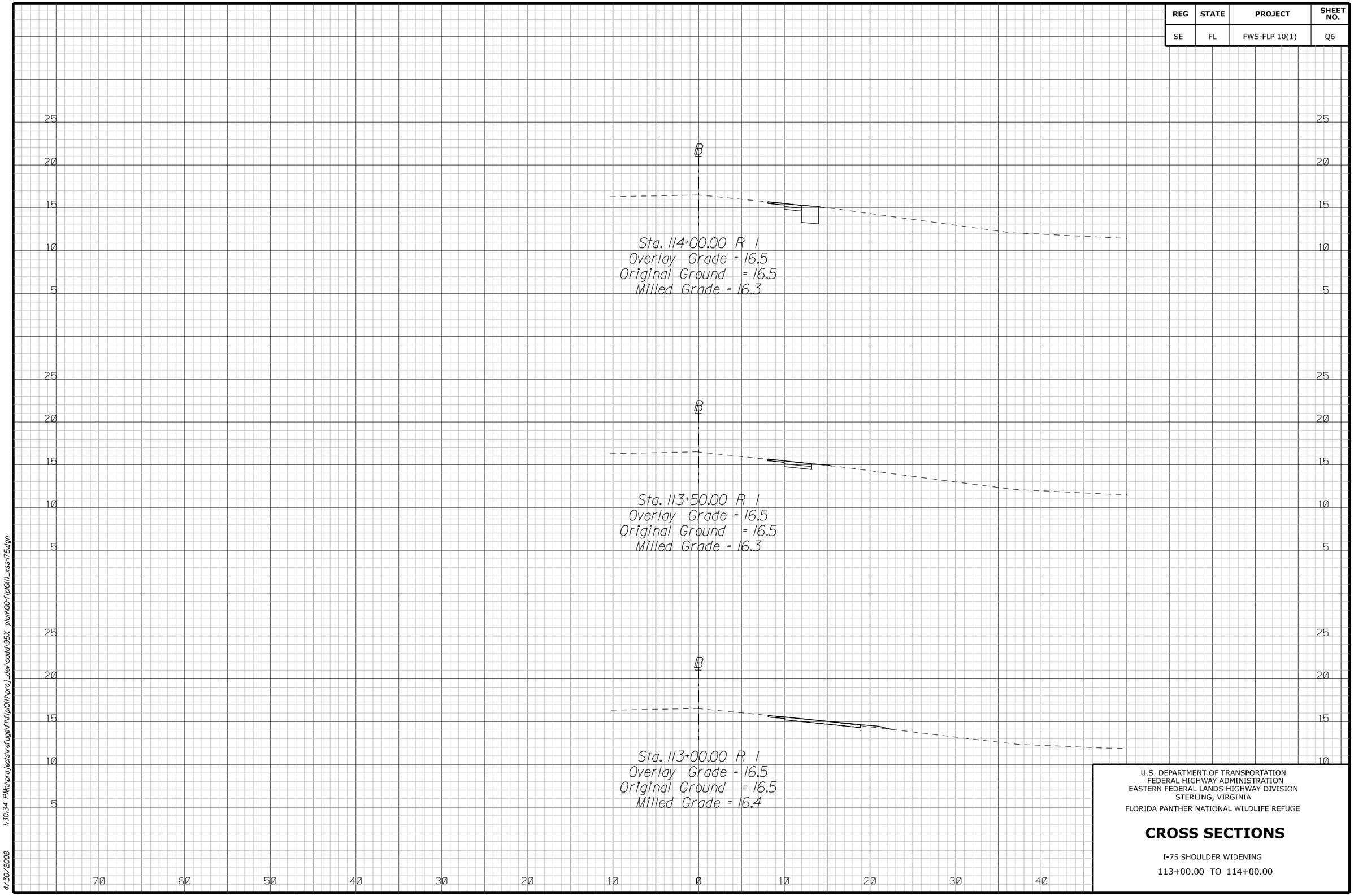

U.S. DEPARTMENT OF TRANSPORTATION
FEDERAL HIGHWAY ADMINISTRATION
EASTERN FEDERAL LANDS HIGHWAY DIVISION
STERLING, VIRGINIA

FLORIDA PANTHER NATIONAL WILDLIFE REFUGE

CROSS SECTIONS

I-75 SHOULDER WIDENING

113+00.00 TO 114+00.00

4/30/2008 1:30:34 PM n:\projects\refuge\f\flp10(1)\proj_dev\cadd\95% plan\00-flp10(1)_xss-175.dgn

REG	STATE	PROJECT	SHEET NO.
SE	FL	FWS-FLP 10(1)	Q7

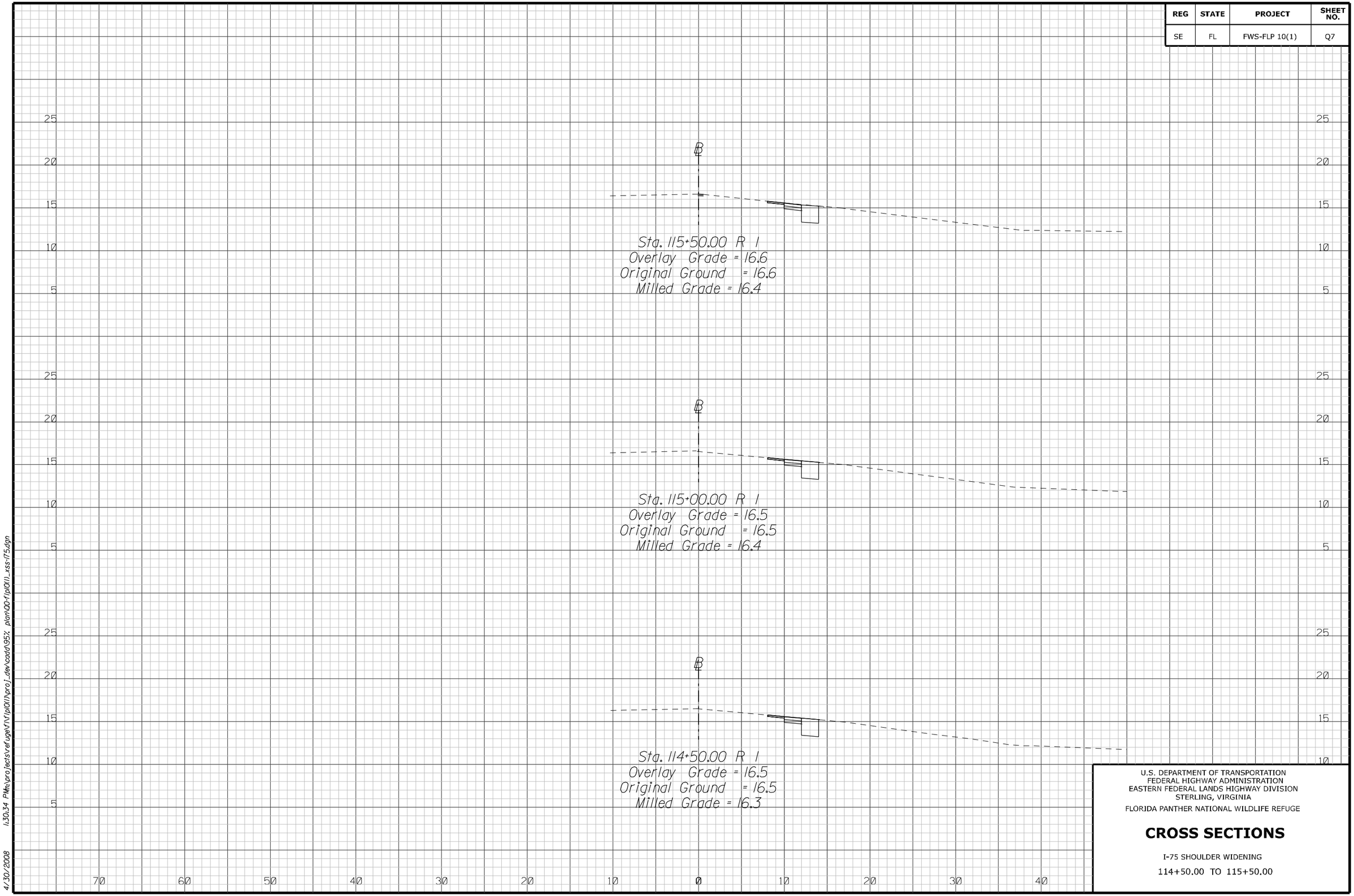

U.S. DEPARTMENT OF TRANSPORTATION
FEDERAL HIGHWAY ADMINISTRATION
EASTERN FEDERAL LANDS HIGHWAY DIVISION
STERLING, VIRGINIA

FLORIDA PANTHER NATIONAL WILDLIFE REFUGE

CROSS SECTIONS

I-75 SHOULDER WIDENING

114+50.00 TO 115+50.00

4/30/2008 1:30:34 PM n:\projects\refuge\fl\flp10(1)\proj_dev\cadd\95%_plan\00-flp10(1)_xss-175.dgn

REG	STATE	PROJECT	SHEET NO.
SE	FL	FWS-FLP 10(1)	Q8

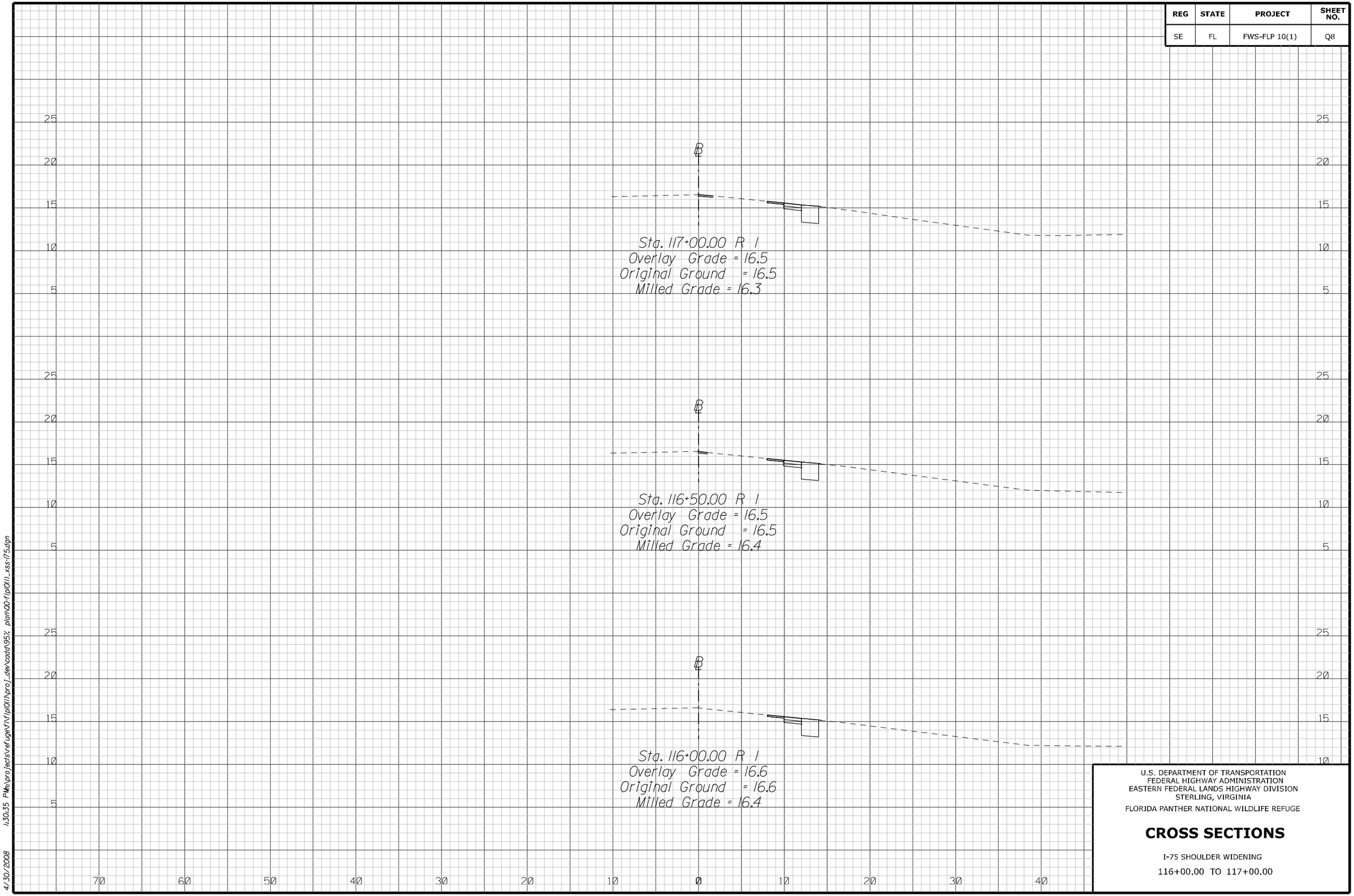

U.S. DEPARTMENT OF TRANSPORTATION
FEDERAL HIGHWAY ADMINISTRATION
EASTERN FEDERAL LANDS HIGHWAY DIVISION
STERLING, VIRGINIA

FLORIDA PANTHER NATIONAL WILDLIFE REFUGE

CROSS SECTIONS

I-75 SHOULDER WIDENING

116+00.00 TO 117+00.00

4/30/2008 1:30:35 PM n:\projects\refuge\fl\flp10(1)\proj_dev\cadd\95% plan\00-flp10(1)_xss-175.dgn

REG	STATE	PROJECT	SHEET NO.
SE	FL	FWS-FLP 10(1)	Q9

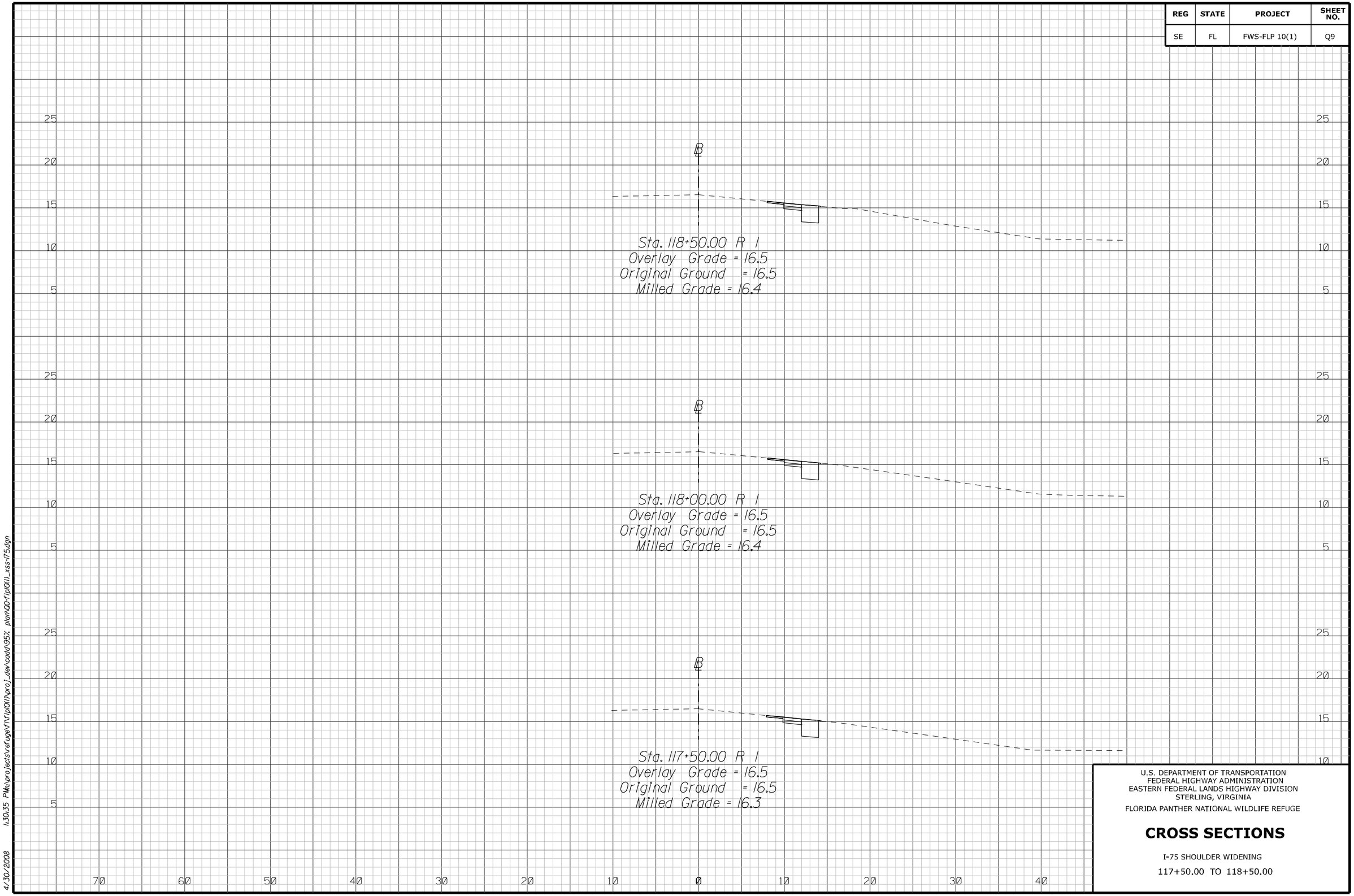

U.S. DEPARTMENT OF TRANSPORTATION
FEDERAL HIGHWAY ADMINISTRATION
EASTERN FEDERAL LANDS HIGHWAY DIVISION
STERLING, VIRGINIA

FLORIDA PANTHER NATIONAL WILDLIFE REFUGE

CROSS SECTIONS

I-75 SHOULDER WIDENING

117+50.00 TO 118+50.00

4/30/2008 1:30:35 PM n:\projects\refuge\fl\pl01\proj_dev\cadd\95%_plan\00-flpl01_xss-175.dgn

REG	STATE	PROJECT	SHEET NO.
SE	FL	FWS-FLP 10(1)	Q10

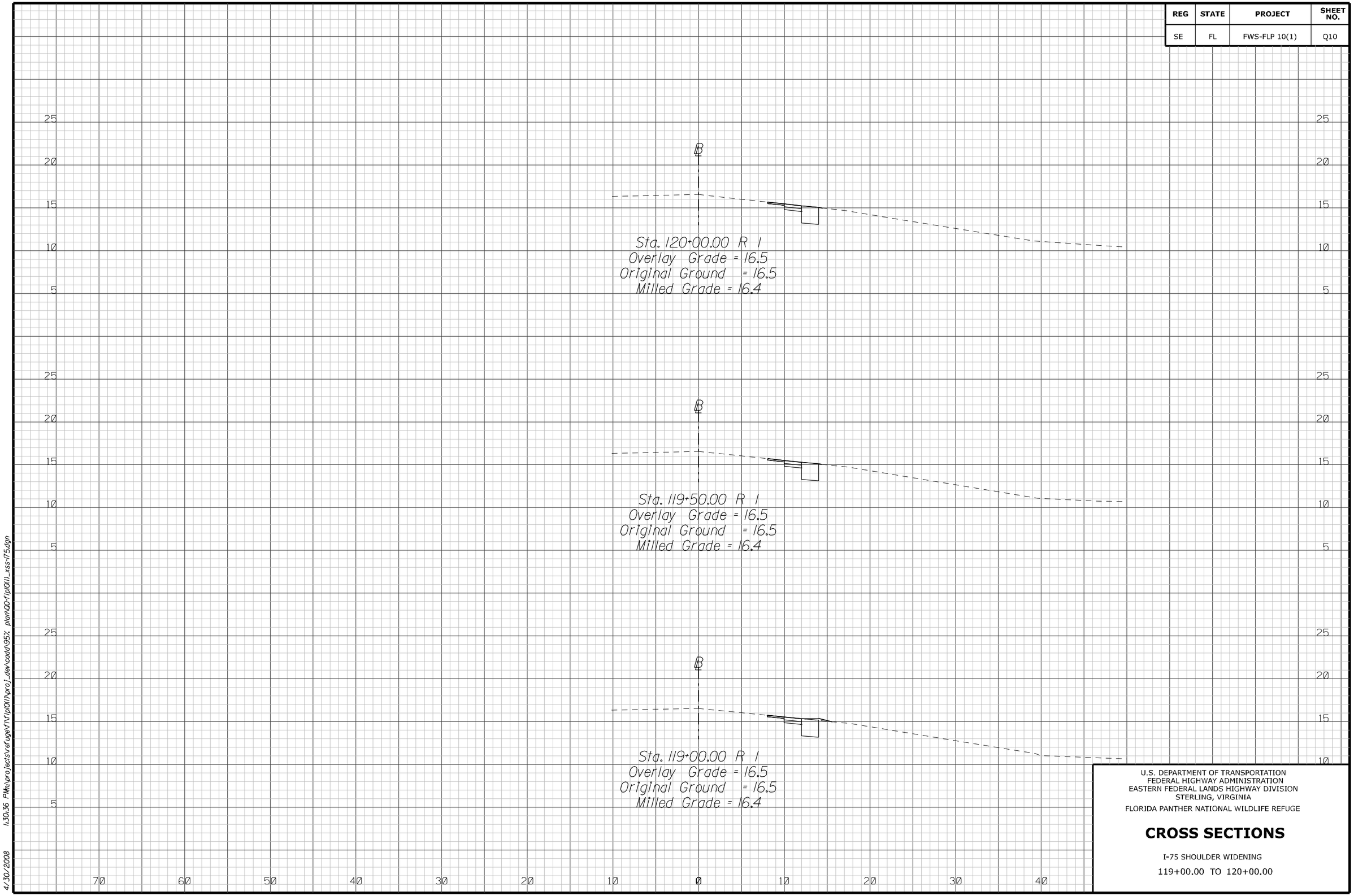

U.S. DEPARTMENT OF TRANSPORTATION
FEDERAL HIGHWAY ADMINISTRATION
EASTERN FEDERAL LANDS HIGHWAY DIVISION
STERLING, VIRGINIA

FLORIDA PANTHER NATIONAL WILDLIFE REFUGE

CROSS SECTIONS

I-75 SHOULDER WIDENING

119+00.00 TO 120+00.00

4/30/2008 1:30:36 PM n:\projects\refuge\f\flp10(1)\proj_dev\cadd\95%_plan\00-flp10(1)_xss-175.dgn

REG	STATE	PROJECT	SHEET NO.
SE	FL	FWS-FLP 10(1)	Q11

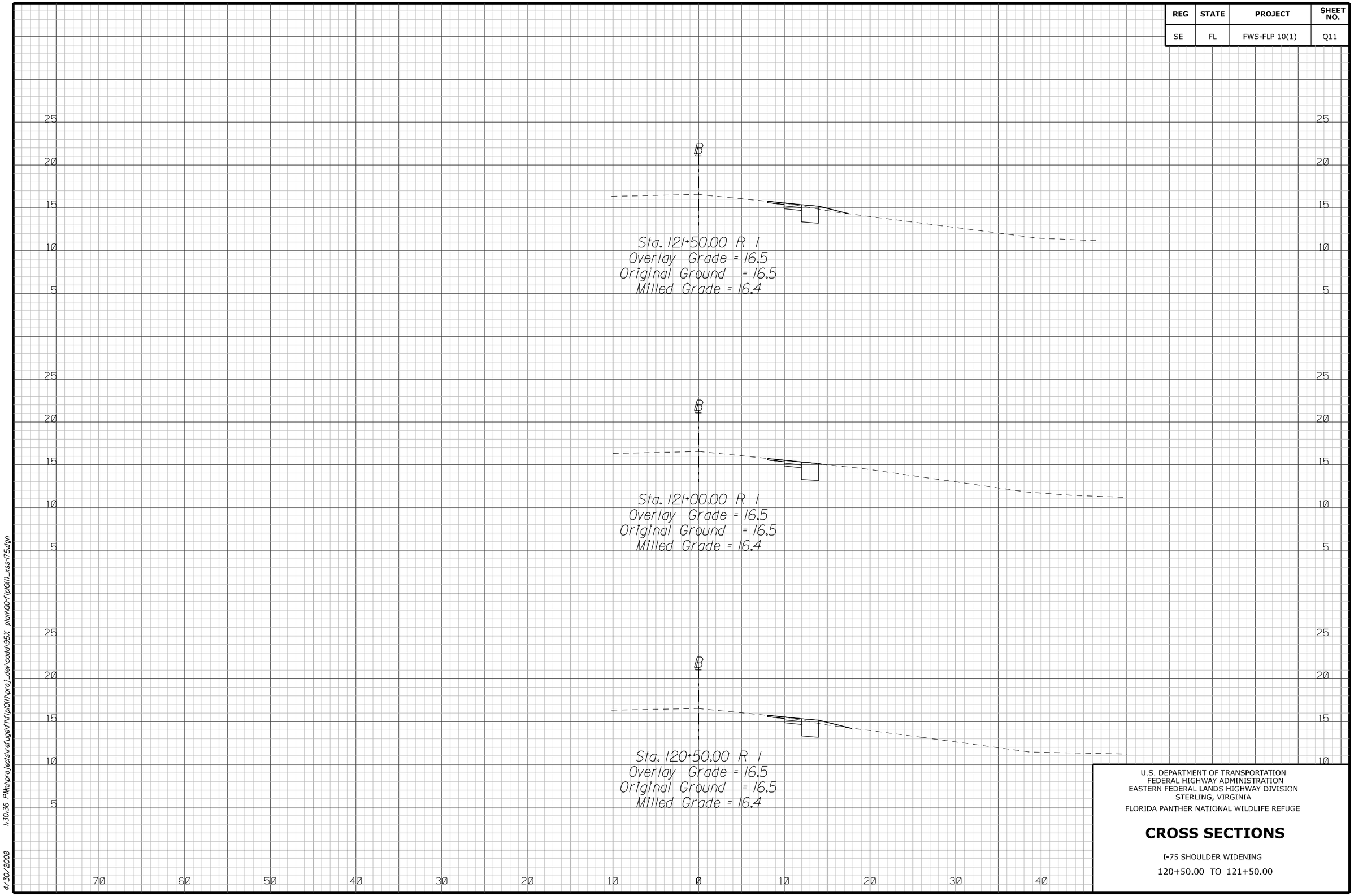

U.S. DEPARTMENT OF TRANSPORTATION
FEDERAL HIGHWAY ADMINISTRATION
EASTERN FEDERAL LANDS HIGHWAY DIVISION
STERLING, VIRGINIA

FLORIDA PANTHER NATIONAL WILDLIFE REFUGE

CROSS SECTIONS

I-75 SHOULDER WIDENING

120+50.00 TO 121+50.00

4/30/2008 1:30:36 PM n:\projects\refuge\fl\flp10(1)\proj_dev\cadd\95%_plan\00-flp10(1)_xss-175.dgn

REG	STATE	PROJECT	SHEET NO.
SE	FL	FWS-FLP 10(1)	Q12

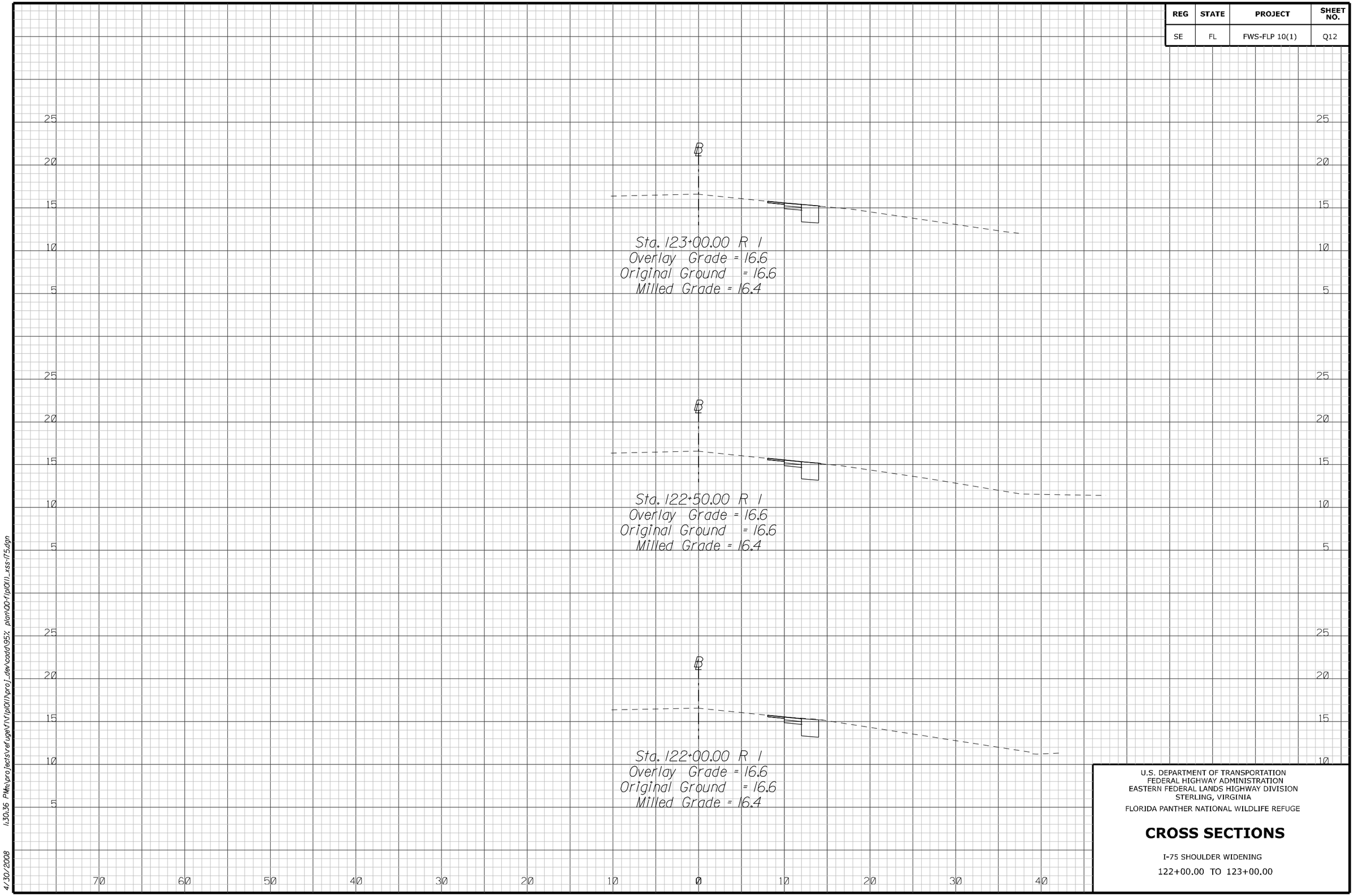

U.S. DEPARTMENT OF TRANSPORTATION
FEDERAL HIGHWAY ADMINISTRATION
EASTERN FEDERAL LANDS HIGHWAY DIVISION
STERLING, VIRGINIA

FLORIDA PANTHER NATIONAL WILDLIFE REFUGE

CROSS SECTIONS

I-75 SHOULDER WIDENING

122+00.00 TO 123+00.00

4/30/2008 1:30:36 PM n:\projects\refuge\fl\flp10(1)\proj_dev\cadd\95% plan\00-flp10(1)_xss-175.dgn

REG	STATE	PROJECT	SHEET NO.
SE	FL	FWS-FLP 10(1)	Q13

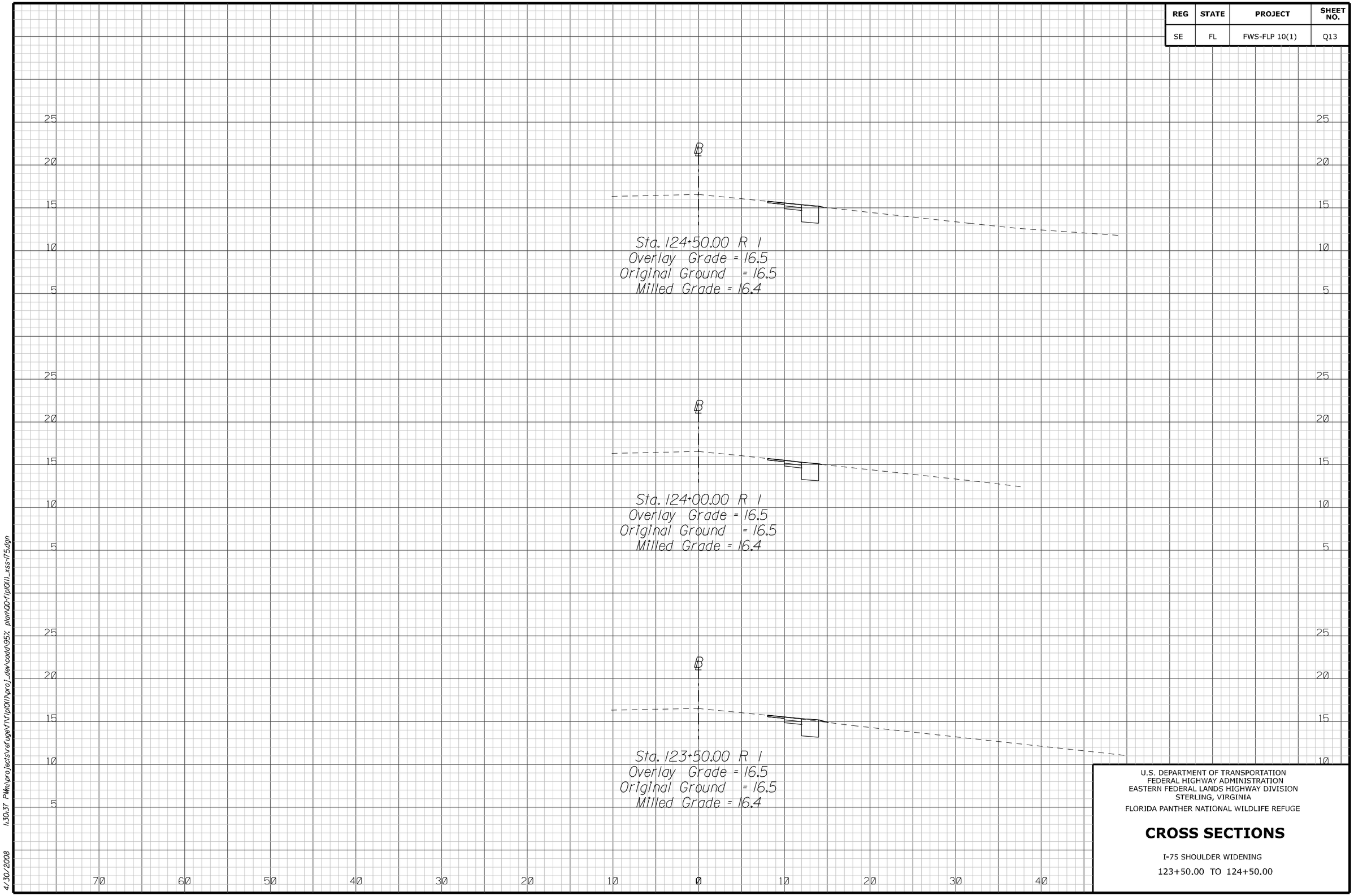

U.S. DEPARTMENT OF TRANSPORTATION
FEDERAL HIGHWAY ADMINISTRATION
EASTERN FEDERAL LANDS HIGHWAY DIVISION
STERLING, VIRGINIA

FLORIDA PANTHER NATIONAL WILDLIFE REFUGE

CROSS SECTIONS

I-75 SHOULDER WIDENING

123+50.00 TO 124+50.00

4/30/2008 1:30:37 PM m:\projects\refuge\fl\flp10(1)\proj_dev\cadd\95% plan\00-flp10(1)_xss-175.dgn

REG	STATE	PROJECT	SHEET NO.
SE	FL	FWS-FLP 10(1)	Q14

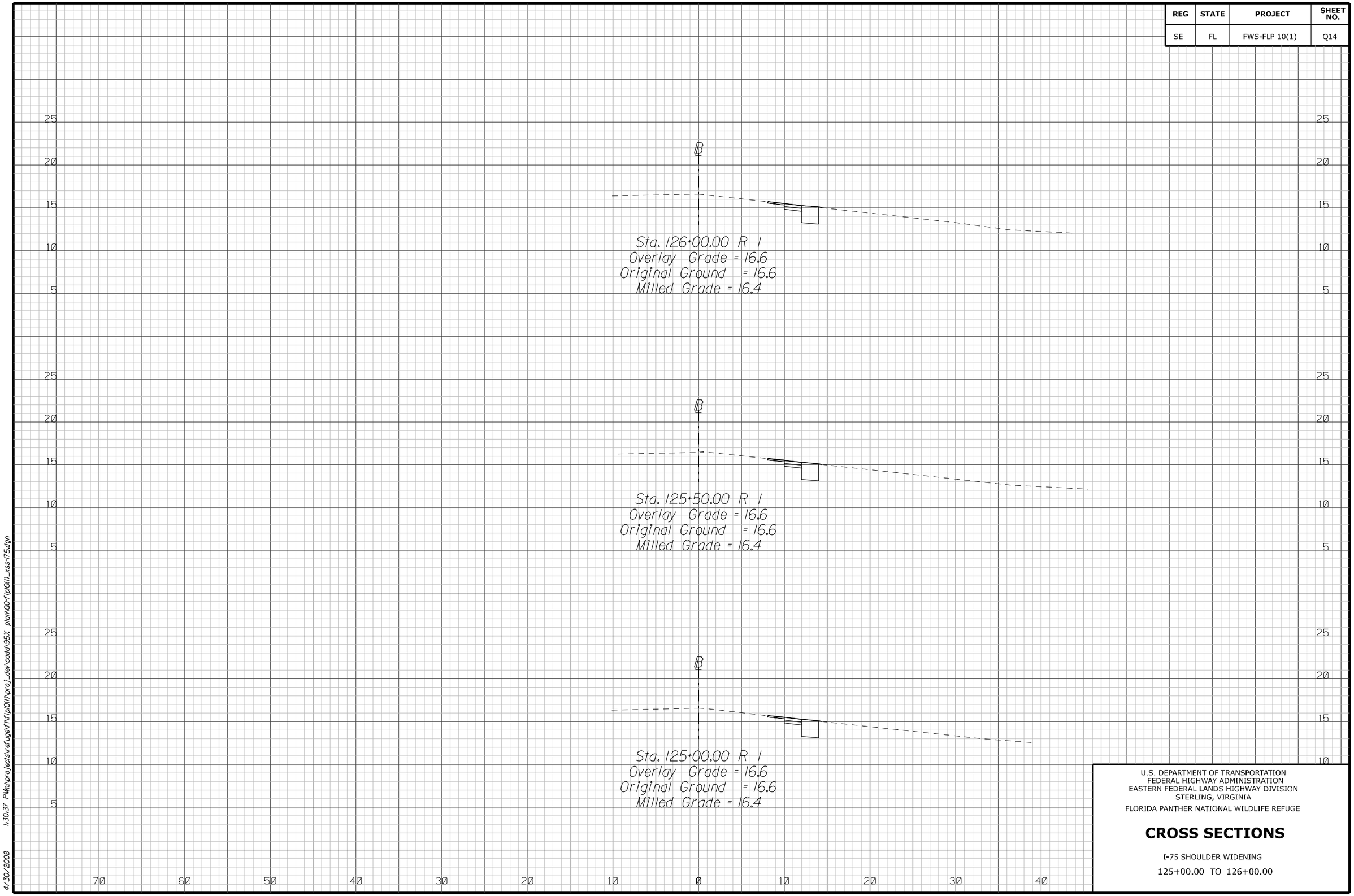

U.S. DEPARTMENT OF TRANSPORTATION
FEDERAL HIGHWAY ADMINISTRATION
EASTERN FEDERAL LANDS HIGHWAY DIVISION
STERLING, VIRGINIA

FLORIDA PANTHER NATIONAL WILDLIFE REFUGE

CROSS SECTIONS

I-75 SHOULDER WIDENING

125+00.00 TO 126+00.00

4/30/2008 1:30:37 PM m:\projects\refuge\f\flp10(1)\proj_dev\cadd\95% plan\00-flp10(1)_xss-175.dgn

REG	STATE	PROJECT	SHEET NO.
SE	FL	FWS-FLP 10(1)	Q15

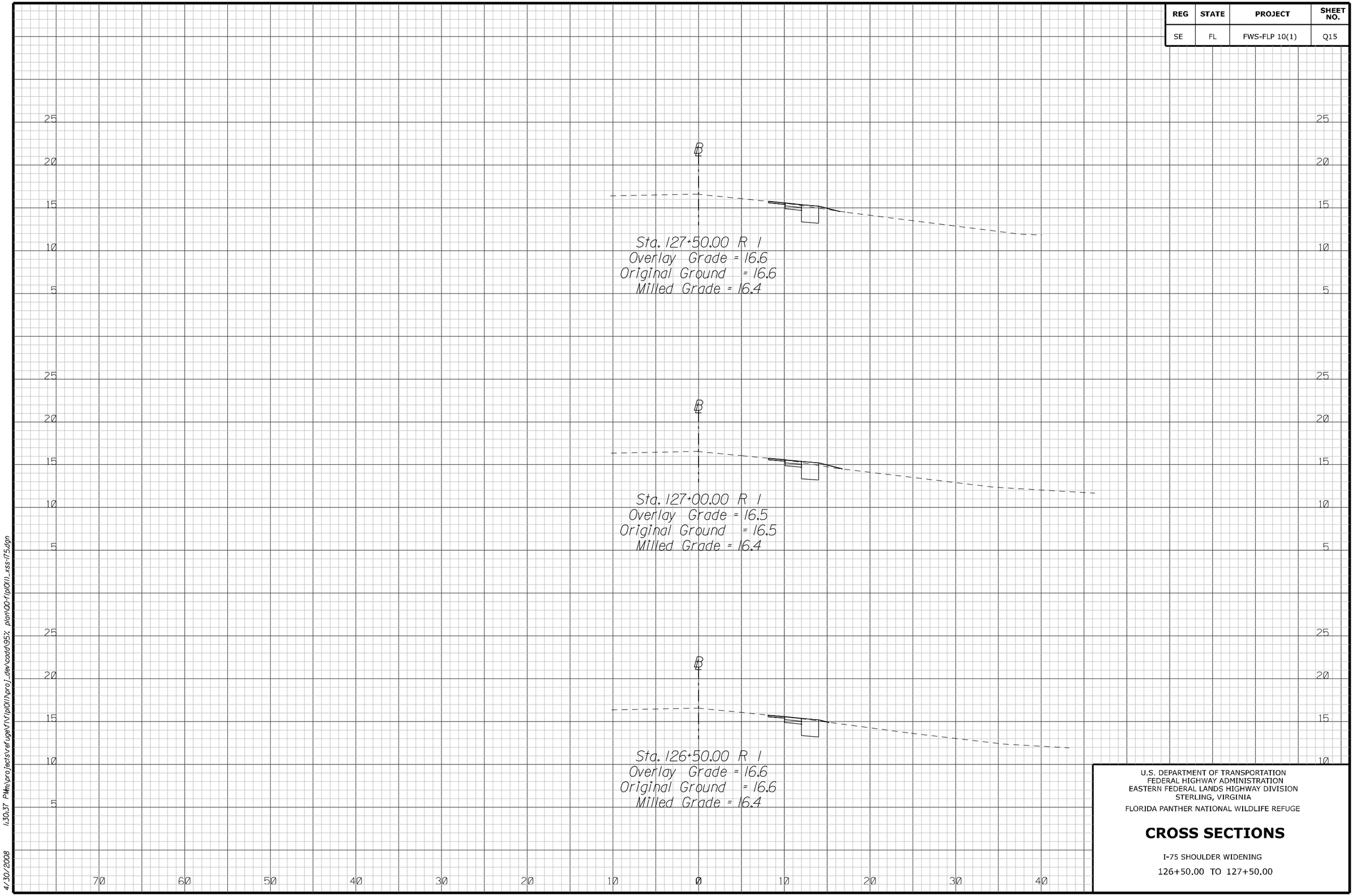

U.S. DEPARTMENT OF TRANSPORTATION
FEDERAL HIGHWAY ADMINISTRATION
EASTERN FEDERAL LANDS HIGHWAY DIVISION
STERLING, VIRGINIA

FLORIDA PANTHER NATIONAL WILDLIFE REFUGE

CROSS SECTIONS

I-75 SHOULDER WIDENING

126+50.00 TO 127+50.00

4/30/2008 1:30:37 PM m:\projects\refuge\fl\flp10(1)\proj_dev\cadd\95% plan\00-flp10(1)_xss-175.dgn

REG	STATE	PROJECT	SHEET NO.
SE	FL	FWS-FLP 10(1)	Q16

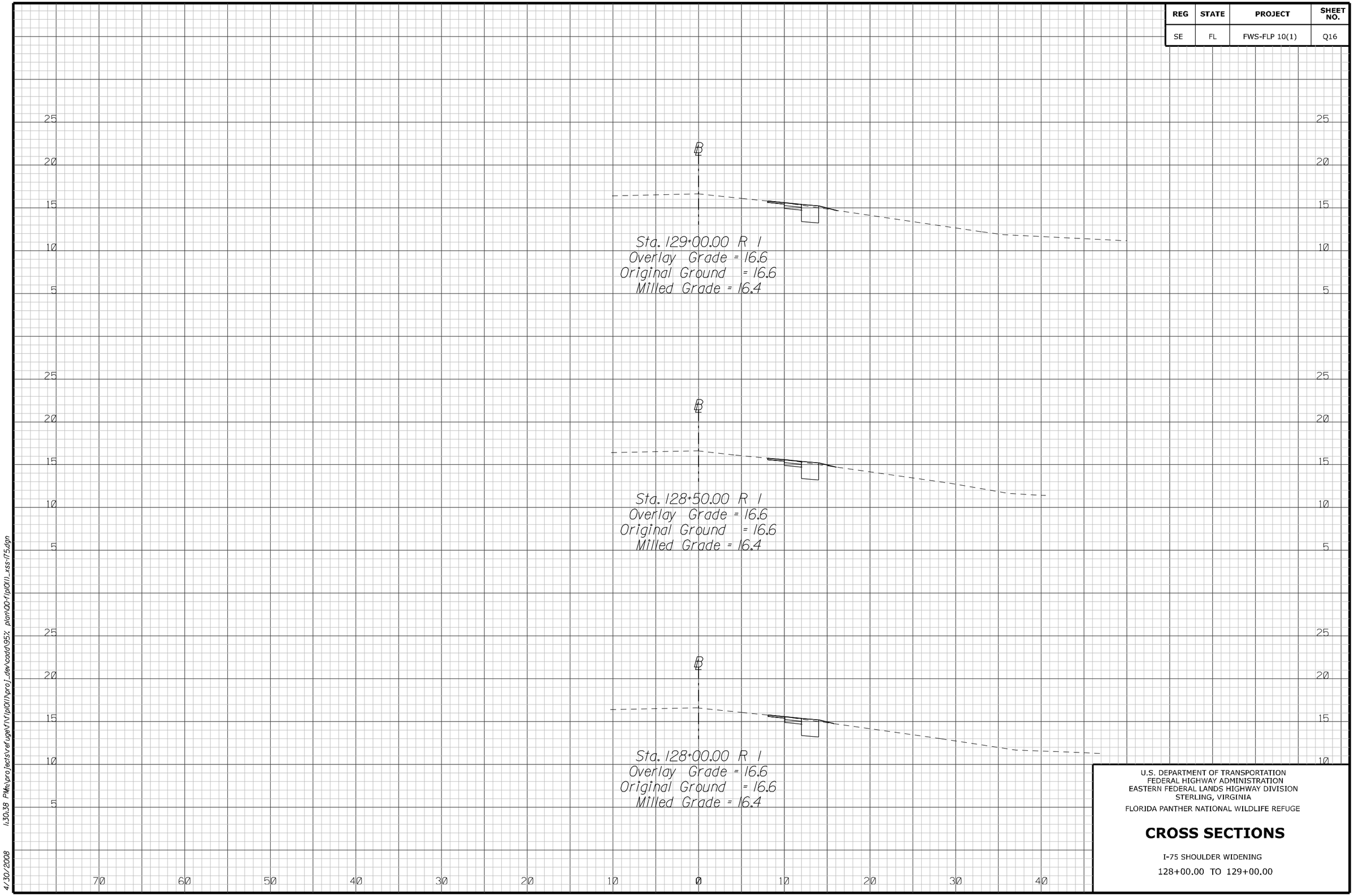

U.S. DEPARTMENT OF TRANSPORTATION
FEDERAL HIGHWAY ADMINISTRATION
EASTERN FEDERAL LANDS HIGHWAY DIVISION
STERLING, VIRGINIA

FLORIDA PANTHER NATIONAL WILDLIFE REFUGE

CROSS SECTIONS

I-75 SHOULDER WIDENING

128+00.00 TO 129+00.00

4/30/2008 1:30:38 PM n:\projects\refuge\fl\flp10(1)\proj_dev\cadd\95% plan\00-flp10(1)_xss-175.dgn

REG	STATE	PROJECT	SHEET NO.
SE	FL	FWS-FLP 10(1)	Q17

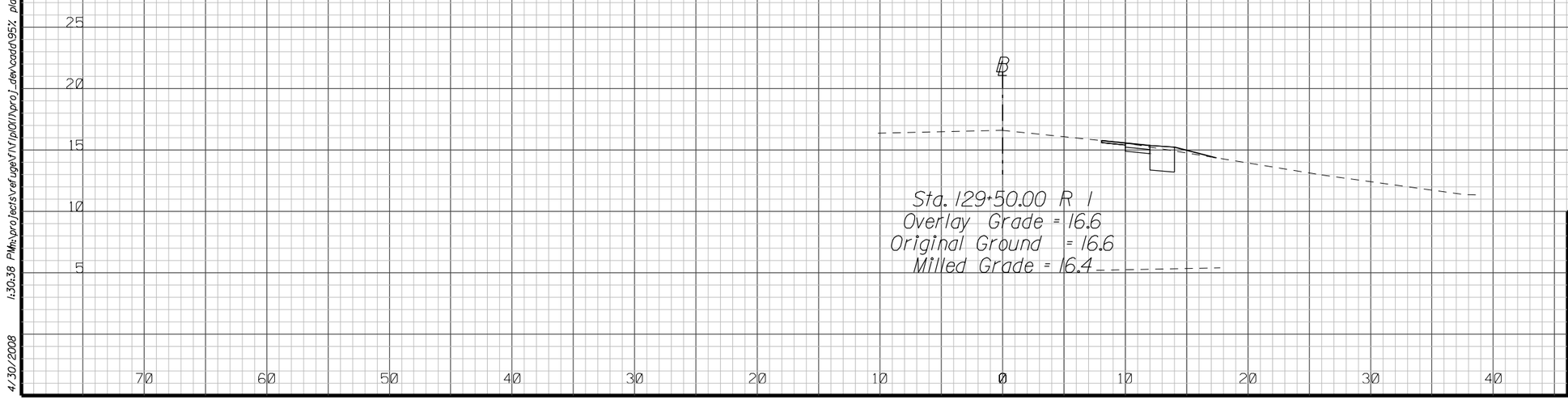

U.S. DEPARTMENT OF TRANSPORTATION
FEDERAL HIGHWAY ADMINISTRATION
EASTERN FEDERAL LANDS HIGHWAY DIVISION
STERLING, VIRGINIA

FLORIDA PANTHER NATIONAL WILDLIFE REFUGE

CROSS SECTIONS

I-75 SHOULDER WIDENING

129+50.00 TO 129+50.00

4/30/2008 1:30:38 PM n:\projects\refuge\fl\flp10(1)\proj_dev\cadd\95% plan\00-flp10(1)_xss-175.dgn

REG	STATE	PROJECT	SHEET NO.
SE	FL	FWS-FLP 10(1)	Q18

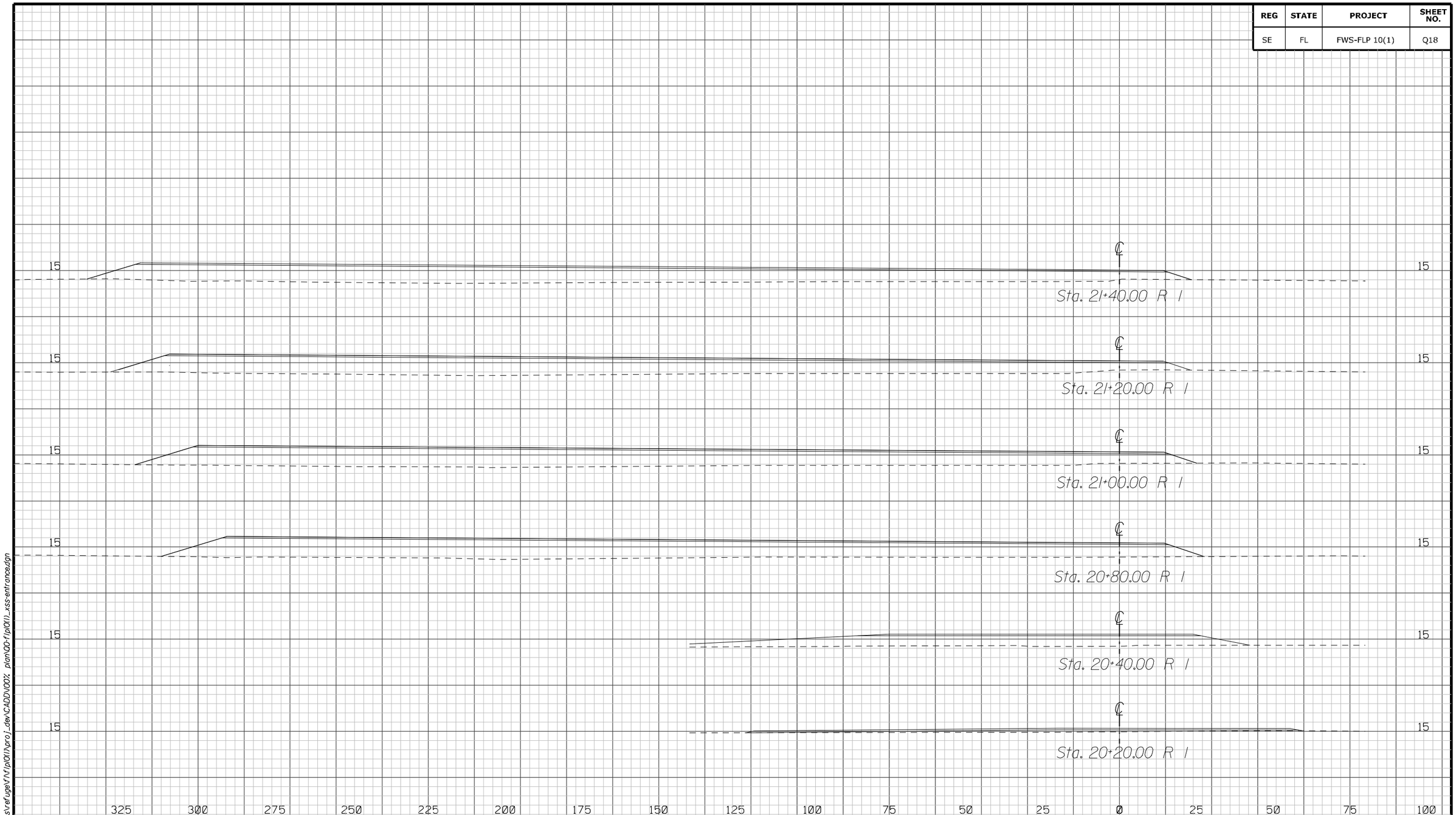

U.S. DEPARTMENT OF TRANSPORTATION
FEDERAL HIGHWAY ADMINISTRATION
EASTERN FEDERAL LANDS HIGHWAY DIVISION
STERLING, VIRGINIA

FLORIDA PANTHER NATIONAL WILDLIFE REFUGE

CROSS SECTIONS

ENTRANCE ROAD

20+20.00 TO 21+40.00

4/30/2008 1:32:14 PMM:\Projects\refuge\fl\flp10(1)\proj_dev\CADD\00% plan\00-flp10(1)_xss-entrance.dgn

REG	STATE	PROJECT	SHEET NO.
SE	FL	FWS-FLP 10(1)	Q19

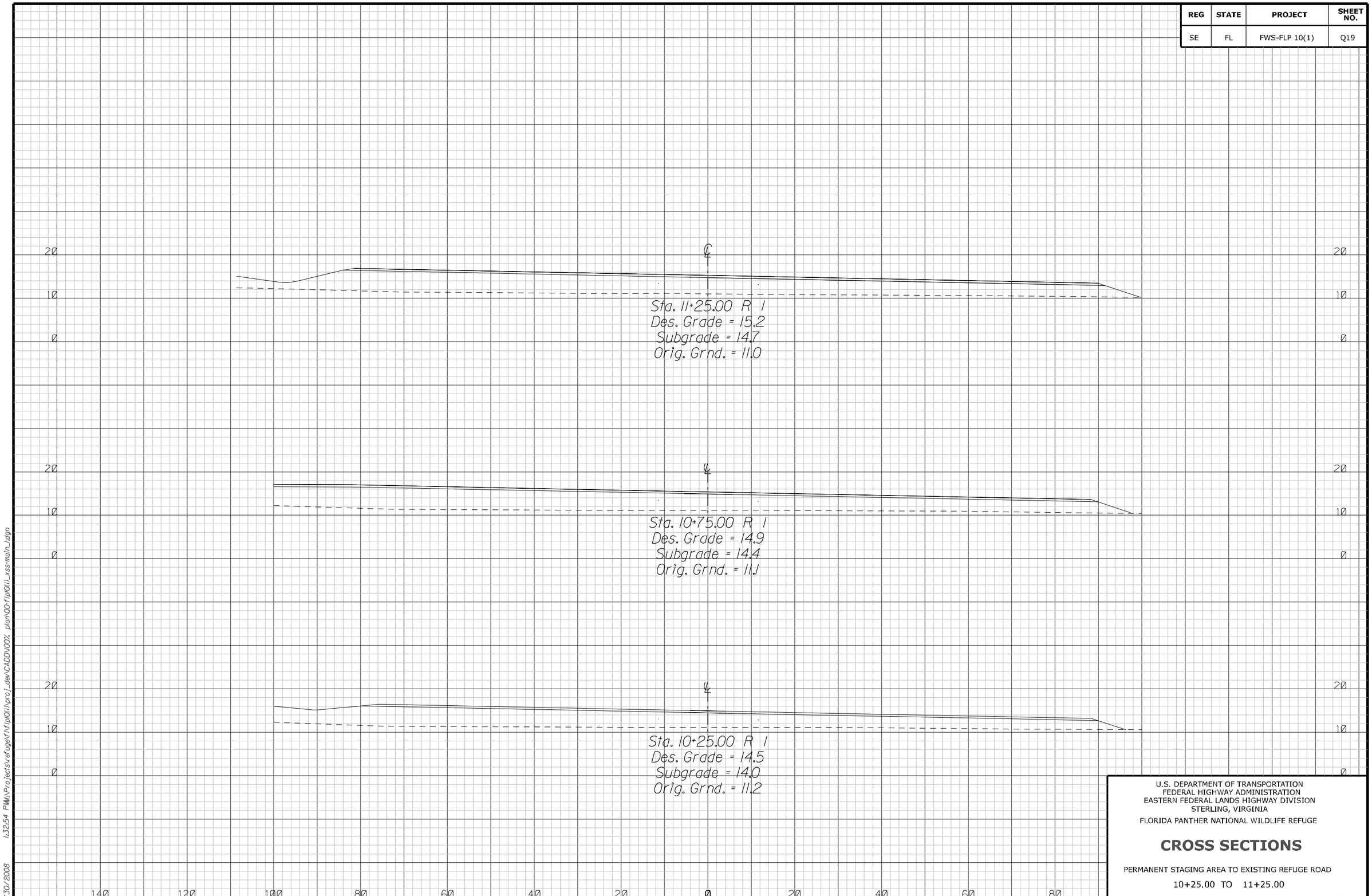

U.S. DEPARTMENT OF TRANSPORTATION
FEDERAL HIGHWAY ADMINISTRATION
EASTERN FEDERAL LANDS HIGHWAY DIVISION
STERLING, VIRGINIA

FLORIDA PANTHER NATIONAL WILDLIFE REFUGE

CROSS SECTIONS

PERMANENT STAGING AREA TO EXISTING REFUGE ROAD

10+25.00 TO 11+25.00

4/30/2008 1:32:54 PM\\Projects\refuge\fl\flp01\proj_dev\CADD\001_plan\00-flp01_xss-main_1.dgn

REG	STATE	PROJECT	SHEET NO.
SE	FL	FWS-FLP 10(1)	Q20

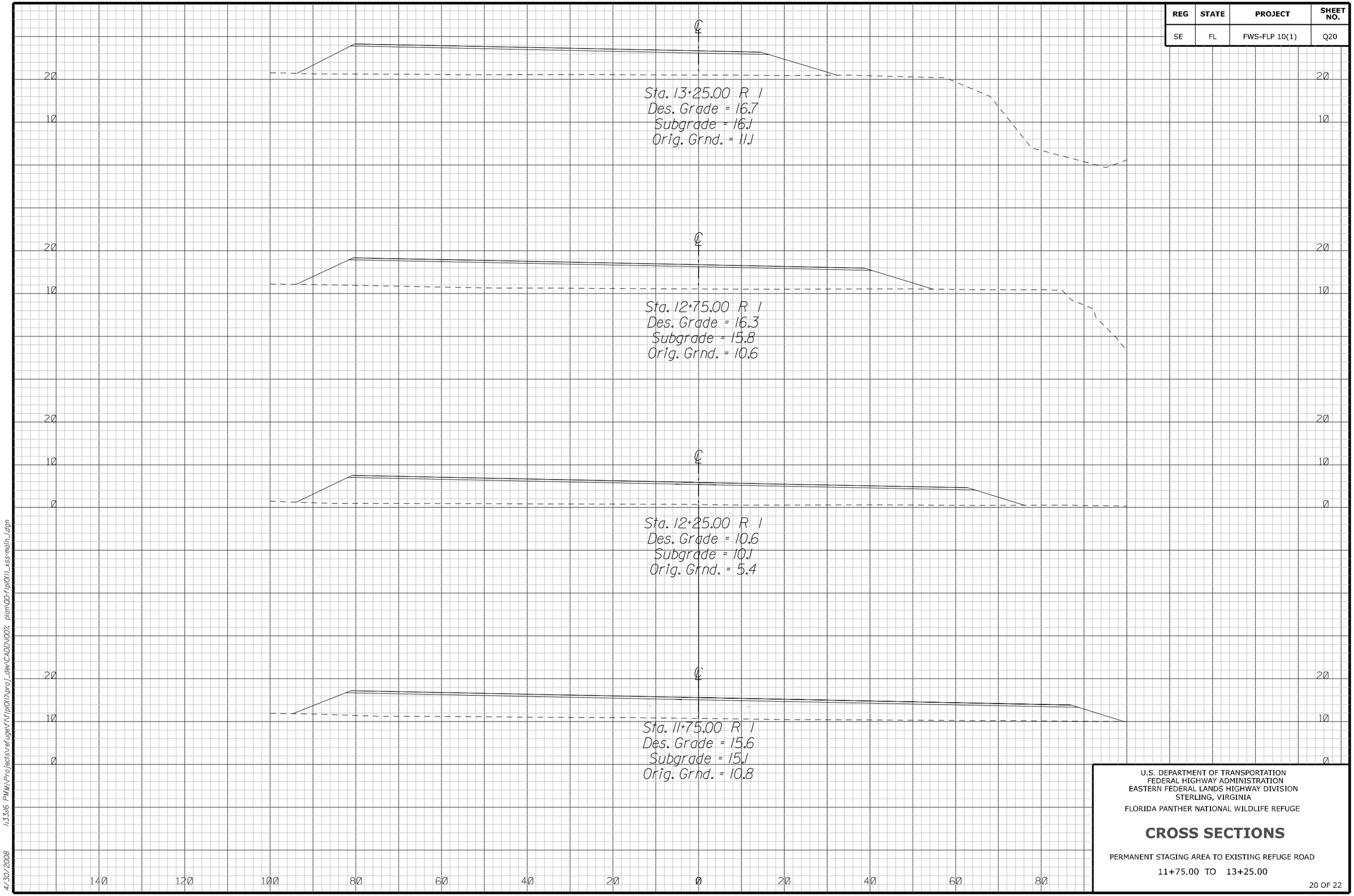

U.S. DEPARTMENT OF TRANSPORTATION
FEDERAL HIGHWAY ADMINISTRATION
EASTERN FEDERAL LANDS HIGHWAY DIVISION
STERLING, VIRGINIA

FLORIDA PANTHER NATIONAL WILDLIFE REFUGE

CROSS SECTIONS

PERMANENT STAGING AREA TO EXISTING REFUGE ROAD

11+75.00 TO 13+25.00

4/30/2008 1:33:16 PMM:\Projects\refuge\fl\flp10(1)\proj_dev\CADD\00% plan\00-flp10(1)_xss-main_1.dgn

REG	STATE	PROJECT	SHEET NO.
SE	FL	FWS-FLP 10(1)	Q21

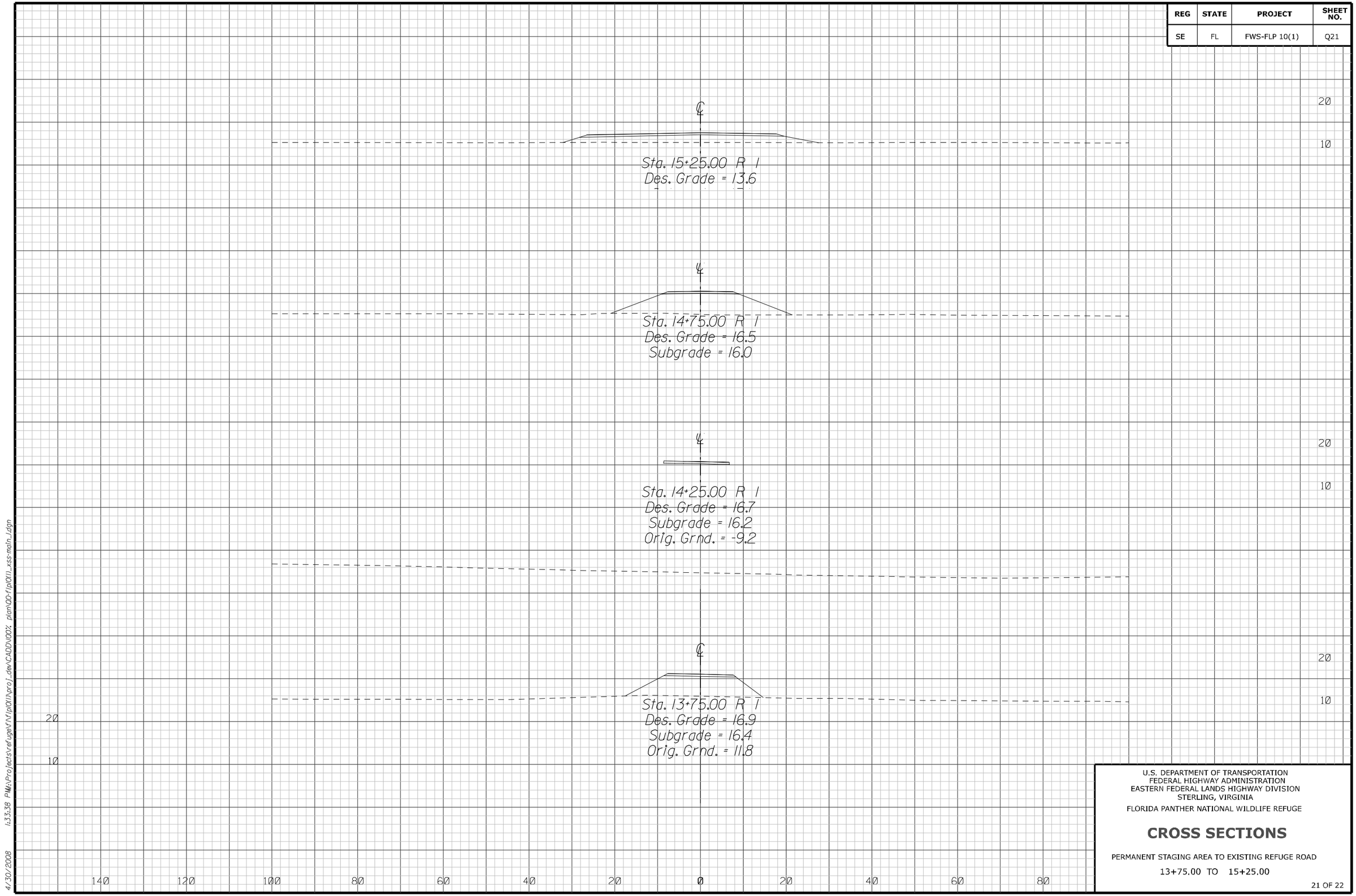

U.S. DEPARTMENT OF TRANSPORTATION
FEDERAL HIGHWAY ADMINISTRATION
EASTERN FEDERAL LANDS HIGHWAY DIVISION
STERLING, VIRGINIA

FLORIDA PANTHER NATIONAL WILDLIFE REFUGE

CROSS SECTIONS

PERMANENT STAGING AREA TO EXISTING REFUGE ROAD

13+75.00 TO 15+25.00

4/30/2008 1:33:38 PM:\Projects\refuge\f\flp10(1)\proj_dev\CADD\00% plan\00-flp10(1)_xss-main_1.dgn

REG	STATE	PROJECT	SHEET NO.
SE	FL	FWS-FLP 10(1)	Q22

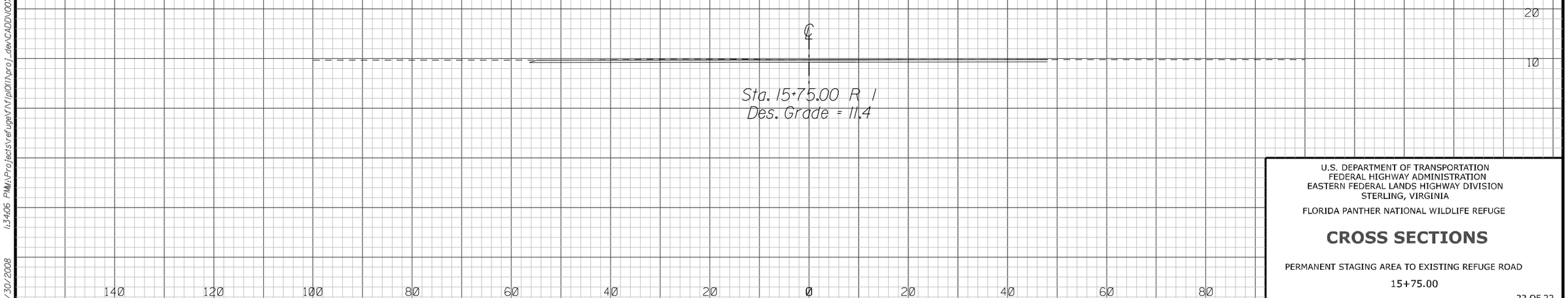

U.S. DEPARTMENT OF TRANSPORTATION
FEDERAL HIGHWAY ADMINISTRATION
EASTERN FEDERAL LANDS HIGHWAY DIVISION
STERLING, VIRGINIA

FLORIDA PANTHER NATIONAL WILDLIFE REFUGE

CROSS SECTIONS

PERMANENT STAGING AREA TO EXISTING REFUGE ROAD

15+75.00

4/30/2008 1:34:06 PM\\Projects\refuge\fl\flp10(1)\proj_dev\CADD\00% plan\00-flp10(1)_xss-main_1.dgn

REGION	STATE	PROJECT	SHEET NO.
SE	FL	FWS FLP 10(1)	R01

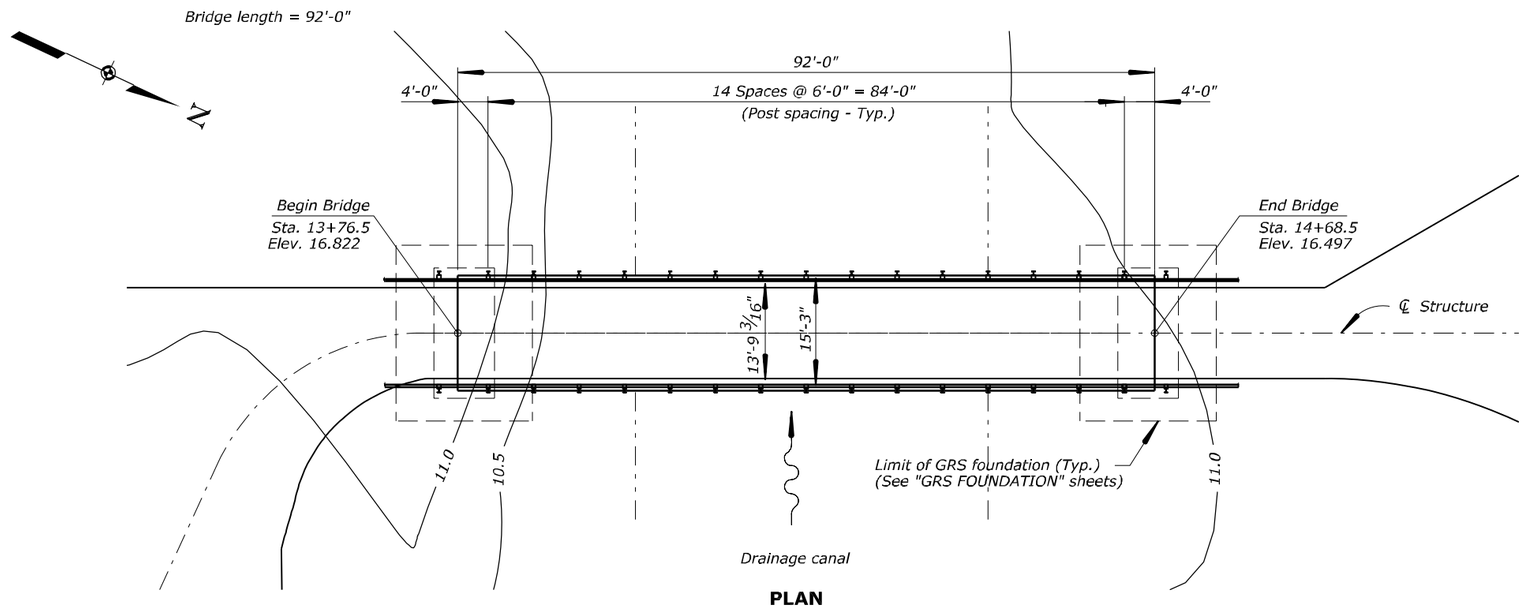

PLAN

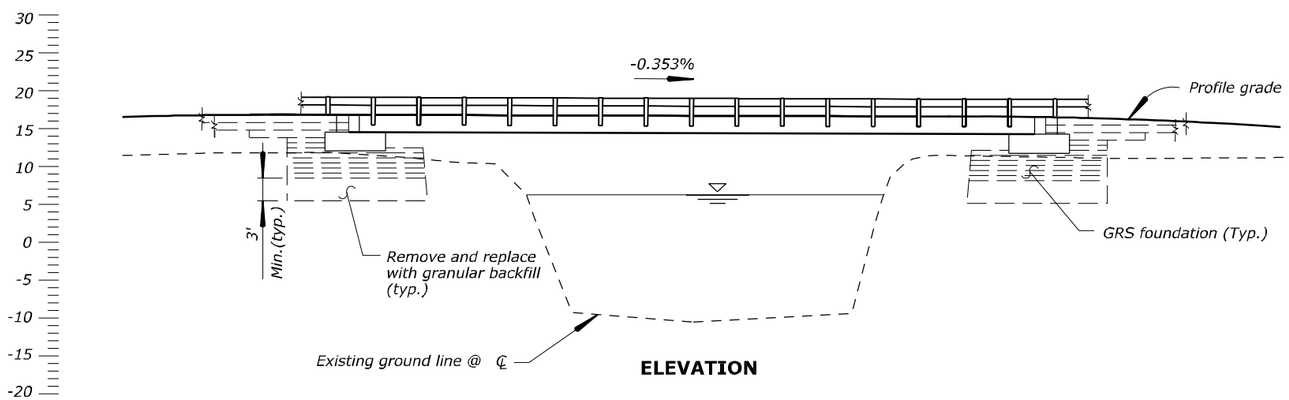

ELEVATION

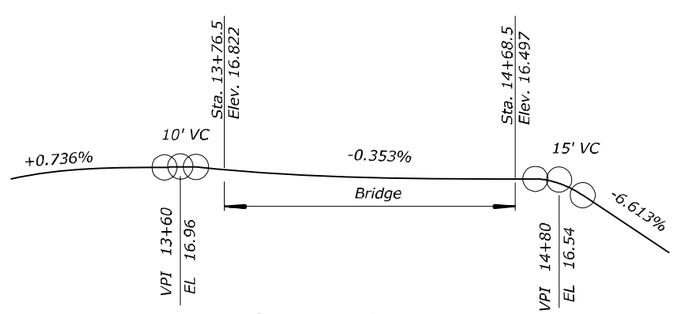

PROFILE GRADE DIAGRAM

GENERAL NOTES

SPECIFICATIONS:

CONSTRUCTION AND DESIGN:

Standard Specifications for Construction of Roads and Bridges on Federal Highway Projects, FP-03 U.S.Customary Units.

AASHTO LFRD Bridge Design Specifications, 2007, 4th Edition.

AASHTO LRFR Load Rating Of Highway Bridges, 2003 with 2005 Interim.

DESIGN LOADING: *AASHTO HL-93*

LEGAL LOAD: *AASHTO Type 3-3 (40tons)*

LOAD RATING:

- *Design load: RF = 1.9*
- *Legal load: RF = 4.1*

DESIGN STRESSES:

Class A (AE) Concrete:	*f'c = 4,000 psi at 28 days*
Class P Concrete (slab units):	*f'c = 7,000 psi at 28 days* *f'ci = 5,500 psi at time of release*
Reinforcing Steel:	*fy = 60,000 psi*
Prestressing Steel:	*f's = 270,000 psi*

CONCRETE:

Concrete used in prestressed box beam units shall be Class P.

All other concrete shall be Class A (AE).

Exposed corners shall be chamfered 3/4 " unless otherwise noted.

REINFORCING STEEL:

Reinforcing steel shall conform to ASTM A615, grade 60.

Splices shall be lapped 30 diameters unless otherwise shown.

Bends shown at the ends of bars shall be standard hooks as defined by AASHTO unless otherwise noted.

Cover for reinforcing steel shall be 2 inches unless otherwise noted.

PRESTRESSED BOX BEAM UNITS:

Prestressed voided slab units are AASHTO BI-36.

Prestressing steel shall be 1/2" diameter, 7-wire, low-relaxation strand conforming to AASHTO M 203, grade 270.

Pre-tension each strand to a total load of 31,000 lb at which load f'si = 0.75f's = 202,500 psi.

The final estimated effective prestress force per strand is 27,170 lb based on estimated losses of 25,000 psi.

U.S. DEPARTMENT OF TRANSPORTATION
FEDERAL HIGHWAY ADMINISTRATION
EASTERN FEDERAL LANDS HIGHWAY DIVISION

FLORIDA PANTHER NATIONAL WILDLIFE REFUGE

BRIDGE OVER DRAINAGE CANAL

PLAN AND ELEVATION

NO.	DATE	BY	REVISIONS	NO.	DATE	BY	REVISIONS	DESIGNED BY	DRAWN BY	CHECKED BY	SCALE	PROJECT TEAM LEADER	BRIDGE DRAWING	DATE	DRAWING NO.
								LN	LN	QN	1" : 10'-0"	QUINN NGUYEN	1 of 9	January 2008	

ACTUAL FILE: R01-PE.DGN
M:\Projects\refuge\fl\fp10(1)\bridge\Microsta\FINAL\OprojectS.dgn
4:16:43 PM
4/30/2008

REGION	STATE	PROJECT	SHEET NO.
SE	FL	FWS FLP 1001	R02

Notes:

1. *Excavate and replace limestone layer with granular backfill in accordance with Section 207.*
2. *Place and compact structural backfill in accordance with Section 208.*
3. *Overlap geotextile wraps a minimum of 3 ft. Provide a minimum of 3 inches of aggregate between geotextile layers over the last 2 ft of wrap.*
4. *Extend geotextile reinforcement and structural backfill a minimum of 3 ft on both sides (perpedicular to centerline) of footings and embankment.*
5. *Wrap geotextile Type III-A directly on top of the concrete footing and along ends of the box beams to provide separation from the structural backfill.*

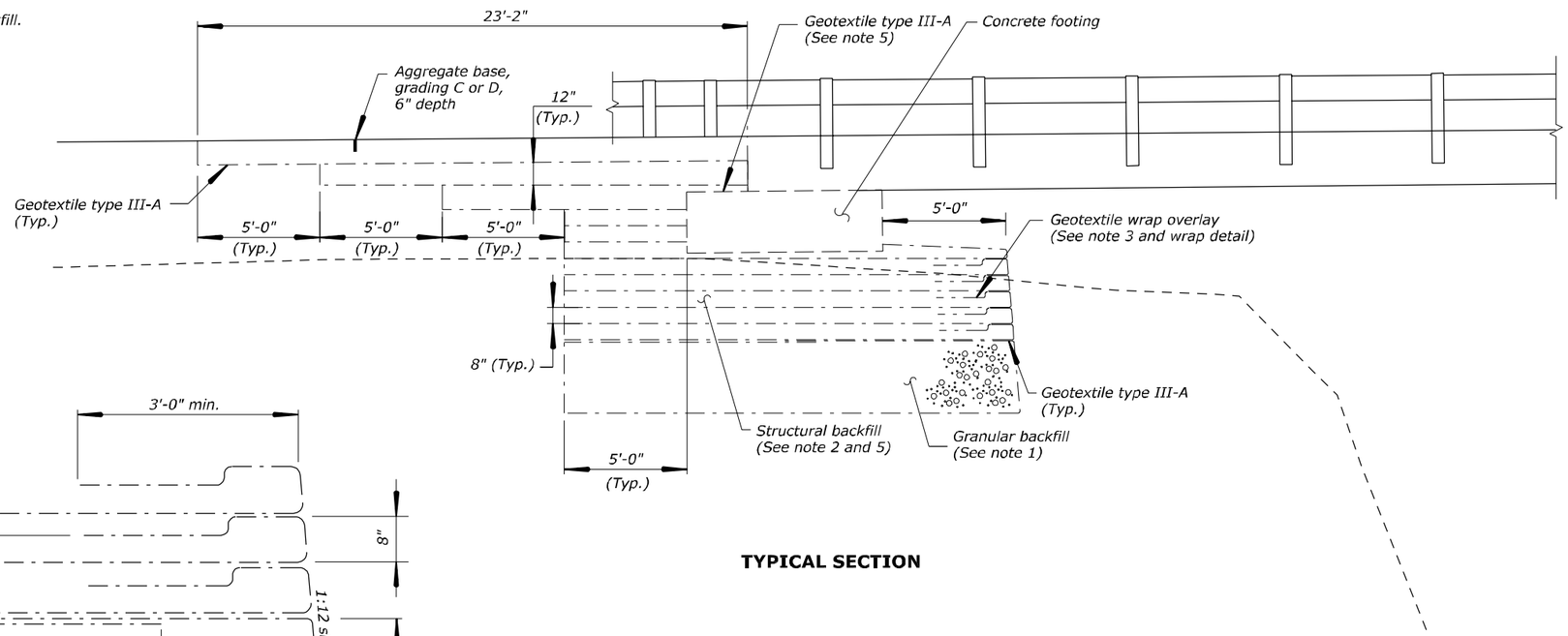

TYPICAL SECTION

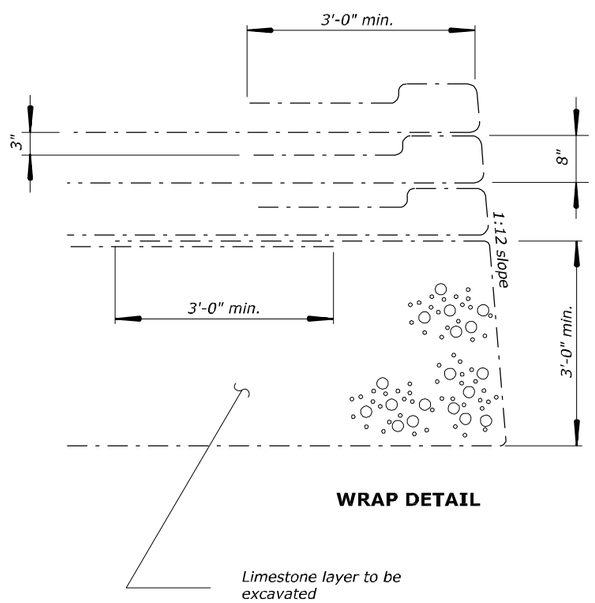

WRAP DETAIL

U.S. DEPARTMENT OF TRANSPORTATION
FEDERAL HIGHWAY ADMINISTRATION
EASTERN FEDERAL LANDS HIGHWAY DIVISION

FLORIDA PANTHER NATIONAL WILDLIFE REFUGE

BRIDGE OVER DRAINAGE CANAL

GEOSYNTHETIC REINFORCING SOIL (GRS) FOUNDATION - 1

NO.	DATE	BY	REVISIONS	NO.	DATE	BY	REVISIONS	DESIGNED BY	DRAWN BY	CHECKED BY	SCALE	PROJECT TEAM LEADER	BRIDGE DRAWING	DATE	DRAWING NO.
								LN	LN	QN	NA	QUINN NGUYEN	2 of 9	January 2008	

ACTUAL FILE: R02-GRS-1dgn.DGN
M:\Projects\refugeVFlpDK1\bridge\Microsta\FINAL\ProjectS.dgn
4:17:04 PM
4/30/2008

REGION	STATE	PROJECT	SHEET NO.
SE	FL	FWS FLP 10(1)	R03

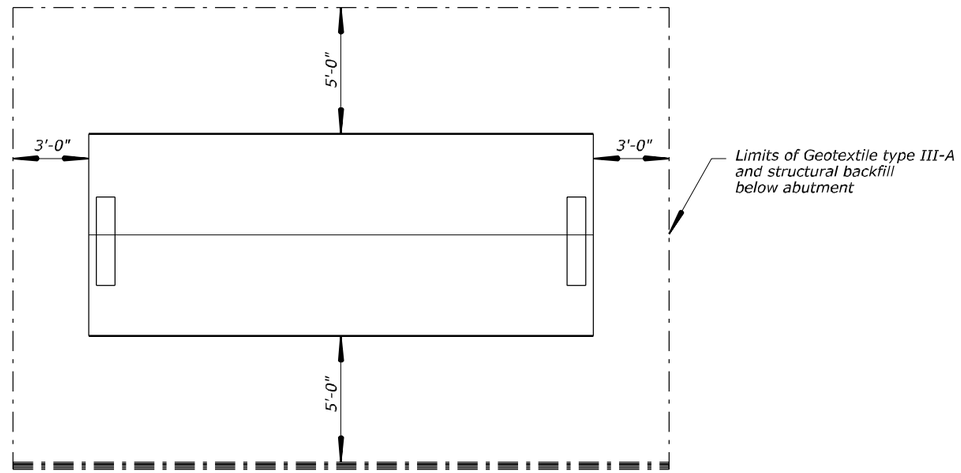

TYPICAL PLAN

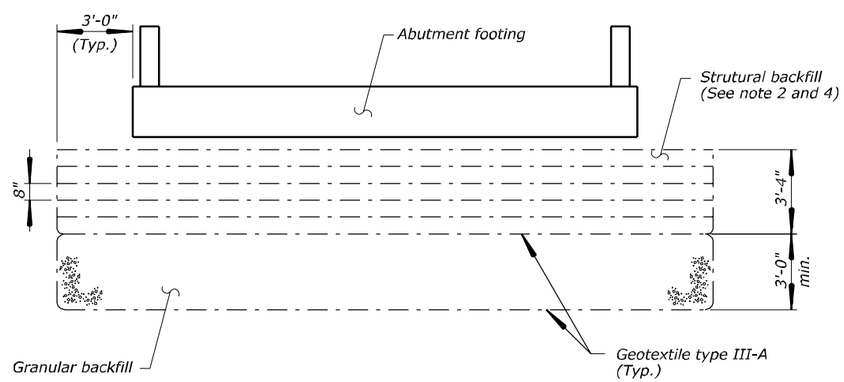

TYPICAL ELEVATION

U.S. DEPARTMENT OF TRANSPORTATION
FEDERAL HIGHWAY ADMINISTRATION
EASTERN FEDERAL LANDS HIGHWAY DIVISION

FLORIDA PANTHER NATIONAL WILDLIFE REFUGE

BRIDGE OVER DRAINAGE CANAL

GEOSYNTHETIC REINFORCING SOIL (GRS)
FOUNDATION - 2

NO.	DATE	BY	REVISIONS	NO.	DATE	BY	REVISIONS	DESIGNED BY	DRAWN BY	CHECKED BY	SCALE	PROJECT TEAM LEADER	BRIDGE DRAWING	DATE	DRAWING NO.
								LN	LN	QN	No Scale	QUINN NGUYEN	3 of 9	January 2008	

ACTUAL FILE: R03-GRS-2dgn.DGN

M:\Projects\refuge\fl\fpl0(1)\bridge\Microsta\FINAL\0projectS.dgn

4:17:20 PM

4/30/2008

REGION	STATE	PROJECT	SHEET NO.
SE	FL	FWS FLP 10(1)	R04

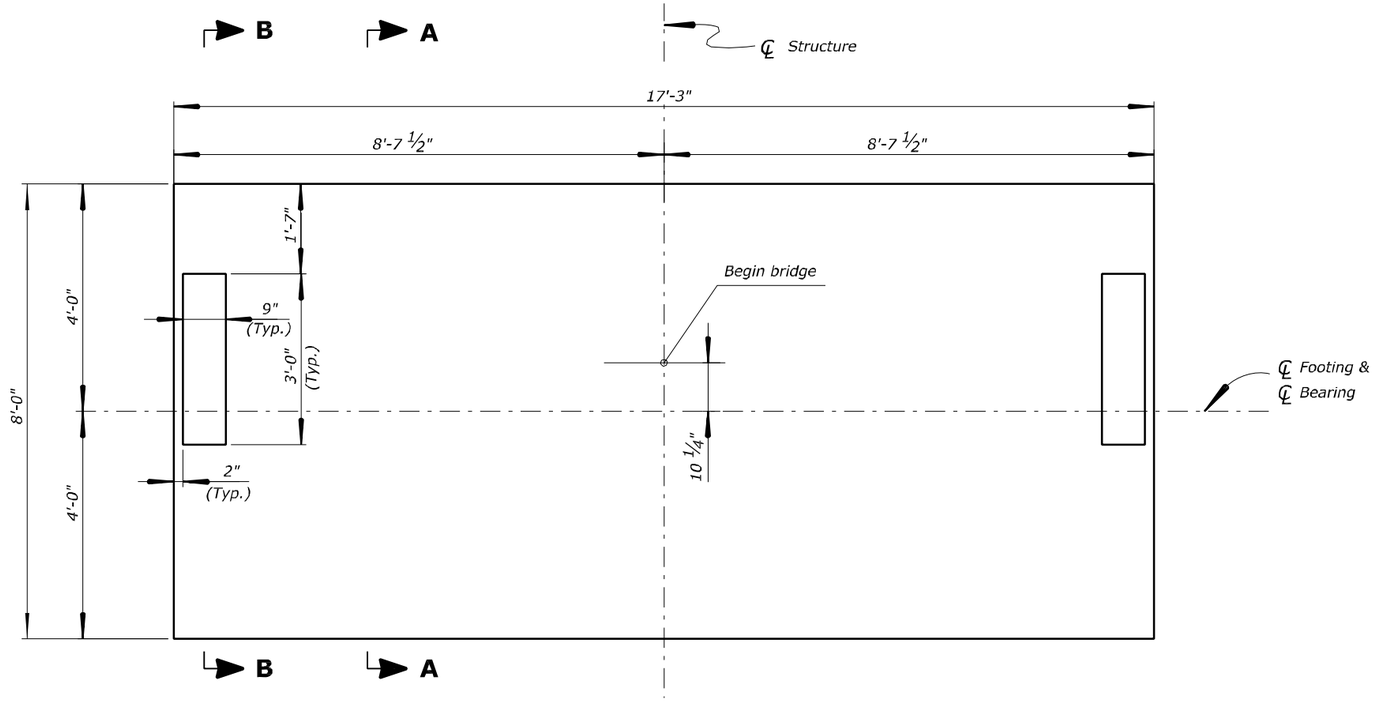

PLAN

(Abutment 1 shown, Abutment 2 similar)

Scale: ¾" = 1'-0"

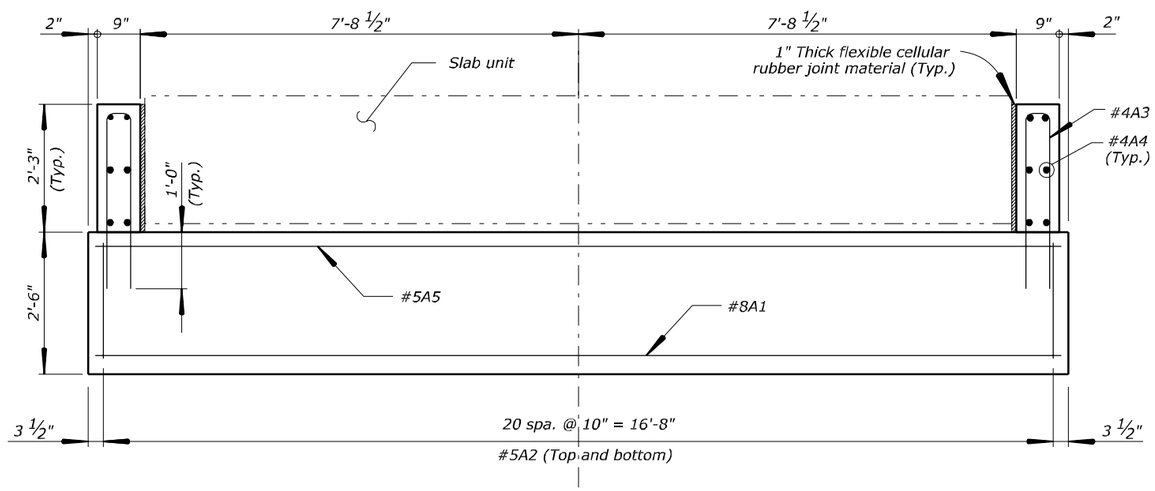

ELEVATION

Scale: ¾" = 1'-0"

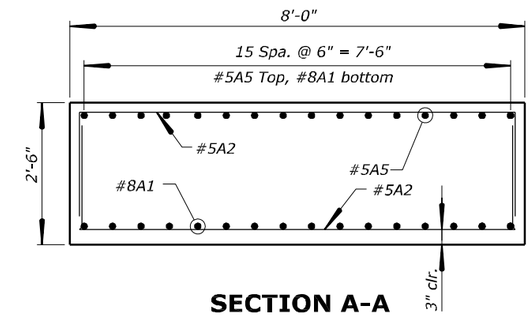

SECTION A-A

Scale: ¾" = 1'-0"

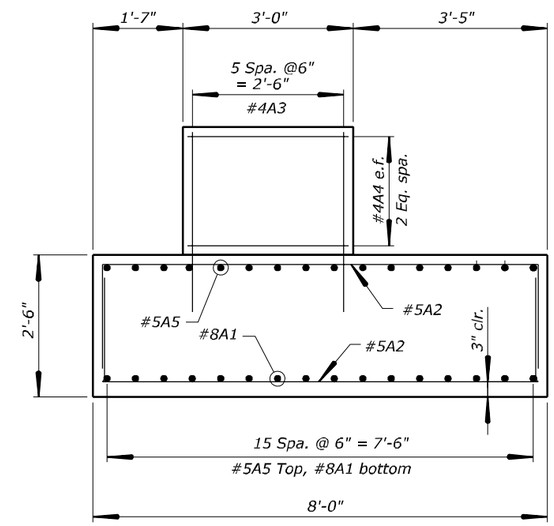

SECTION B-B

Scale: ¾" = 1'-0"

Key:
e.f. = each face

U.S. DEPARTMENT OF TRANSPORTATION
FEDERAL HIGHWAY ADMINISTRATION
EASTERN FEDERAL LANDS HIGHWAY DIVISION

FLORIDA PANTHER NATIONAL WILDLIFE REFUGE

BRIDGE OVER DRAINAGE CANAL

ABUTMENT SLAB

NO.	DATE	BY	REVISIONS	NO.	DATE	BY	REVISIONS	DESIGNED BY	DRAWN BY	CHECKED BY	SCALE	PROJECT TEAM LEADER	BRIDGE DRAWING	DATE	DRAWING NO.
								LN	LN	QN	As shown	QUINN NGUYEN	4 of 9	January 2008	

ACTUAL FILE: R04-ABUT.DGN
4/30/2008 4:17:37 PM M:\ProjectsVrefuge\FNFIpl01\bridge\Microsta\FINAL\0projectS.dgn

REGION	STATE	PROJECT	SHEET NO.
SE	FL	FWS FLP 10(1)	R05

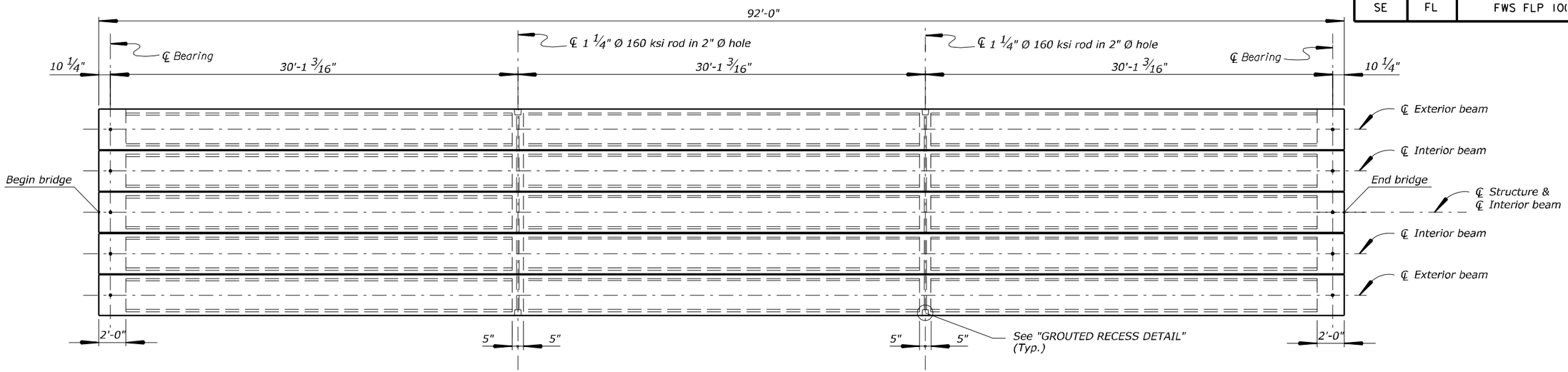

FRAMING PLAN

Scale: 1/4" = 1'-0"

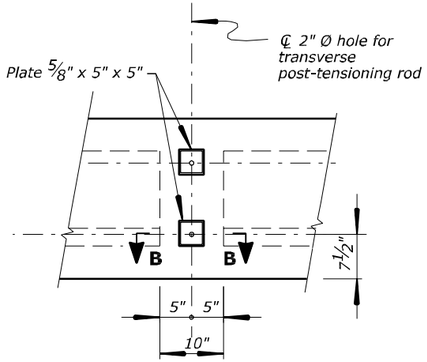

AT DIAPHRAGM

No Scale

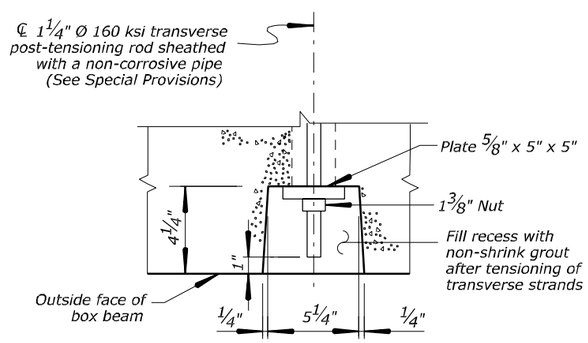

SECTION B-B

No Scale

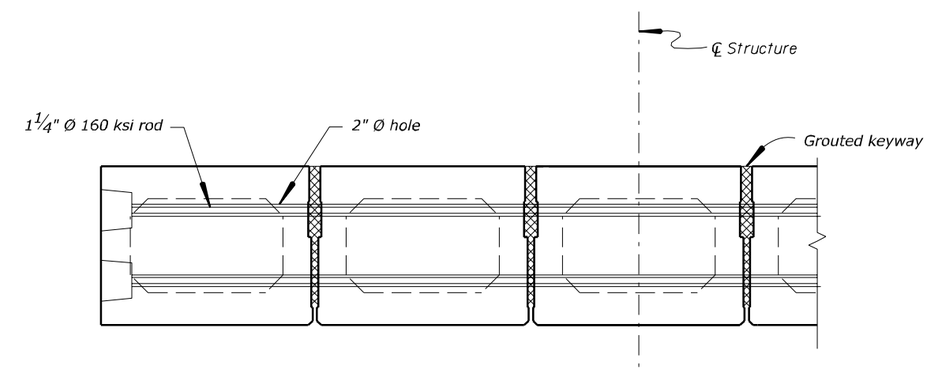

PARTIAL SECTION AT DIAPHRAGM

No Scale

GROUTED RECESS DETAIL

ESTIMATED QUANTITIES		
ONE BI - 36 BEAM		
	Ext. Beam	Int. Beam
Concrete	14 Cu. Yds.	14 Cu. Yds.
Reinf. Steel	1197 Lbs.	1197 Lbs.
½" Ø Strands	2,392 Lin. Ft.	2,392 Lin. Ft.

Note: All reinforcing steel shall be epoxy coated.

U.S. DEPARTMENT OF TRANSPORTATION
FEDERAL HIGHWAY ADMINISTRATION
EASTERN FEDERAL LANDS HIGHWAY DIVISION

FLORIDA PANTHER NATIONAL WILDLIFE REFUGE

BRIDGE OVER DRAINAGE CANAL

FRAMING PLAN

NO.	DATE	BY	REVISIONS	NO.	DATE	BY	REVISIONS	DESIGNED BY	DRAWN BY	CHECKED BY	SCALE	PROJECT TEAM LEADER	BRIDGE DRAWING	DATE	DRAWING NO.
								LN	LN	QN	As shown	QUINN NGUYEN	5 of 9	January 2008	

ACTUAL FILE: R05-FP.DGN

4/30/2008 4:17:55 PM M:\Projects\refuge\f\fl\fl01\bridge\Microsta\FINAL\Oprojects.dgn

REGION	STATE	PROJECT	SHEET NO.
SE	FL	FWS FLP 10(1)	R06

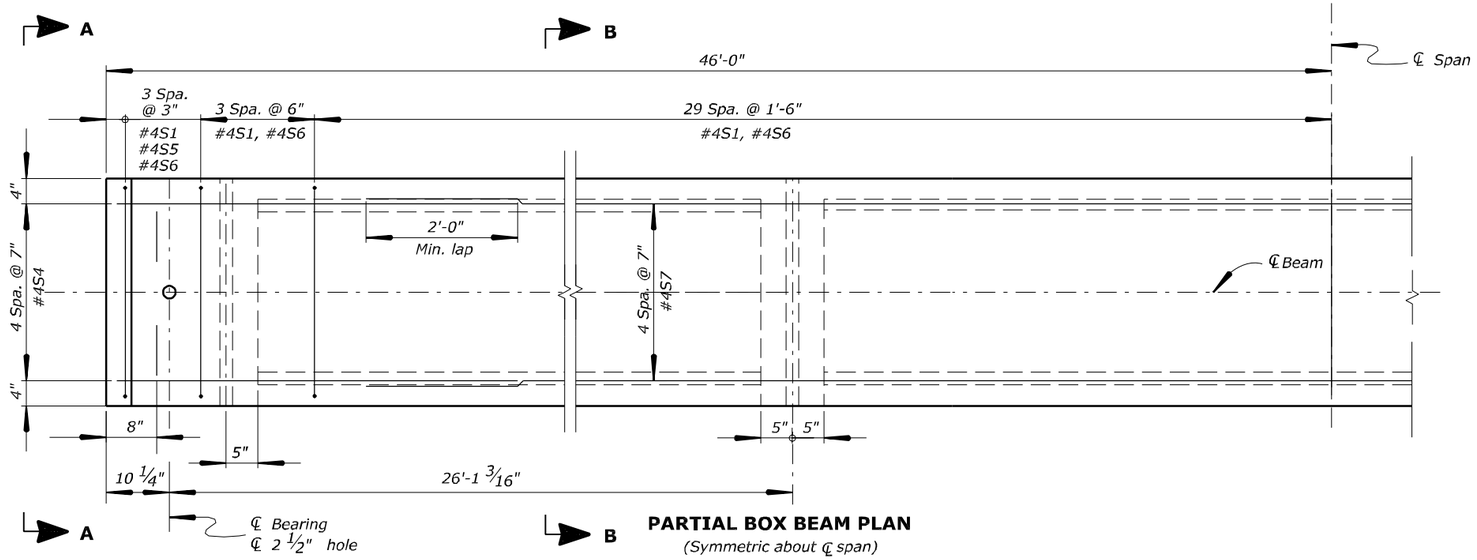

PARTIAL BOX BEAM PLAN

(Symmetric about ℄ span)

SCALE : 1" = 1'

MARK	DIMENSION	
	B	C
#4S1	2'-6 1/2"	1'-0"
#4S2	21'-0"	
#4S3	2'-7"	21'-0"
#4S4	20'-6"	
#4S5	2'-5"	1'-4"
#4S6	2'-5"	1'-8"
#4S7	54'-0"	

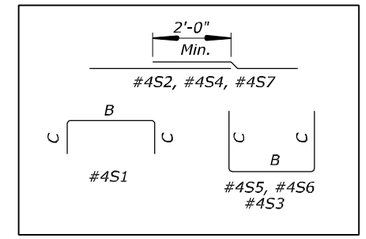

Notes:

Recesses for transverse strands shall be grouted after tensioning of the strands.

Cut strands flush with beam ends and weatherproof with an approved coating.

The tops of prestressed units shall receive a transverse roughened finish with an amplitude of 3/16".

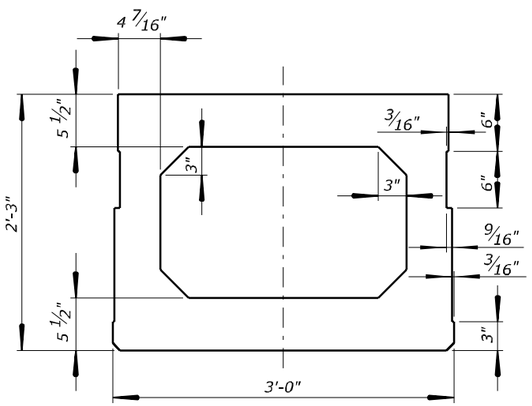

TYPICAL INTERIOR BOX BEAM SECTION

SCALE : 1 1/2" = 1'

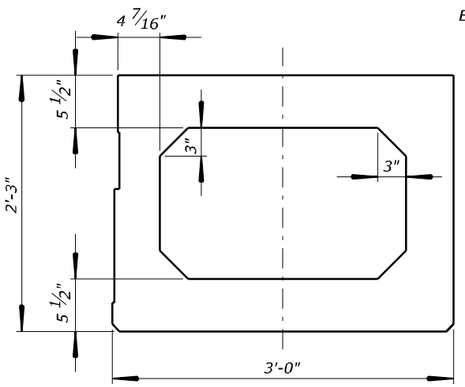

TYPICAL EXTERIOR BOX BEAM SECTION

SCALE : 1 1/2" = 1'

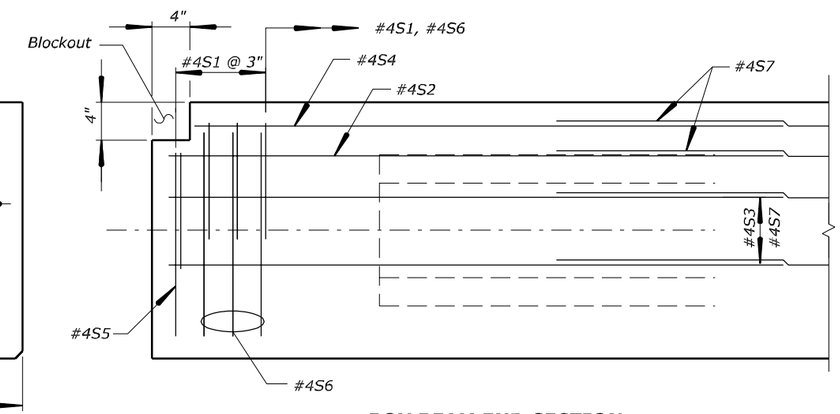

BOX BEAM END SECTION

SCALE : 1 1/2" = 1'

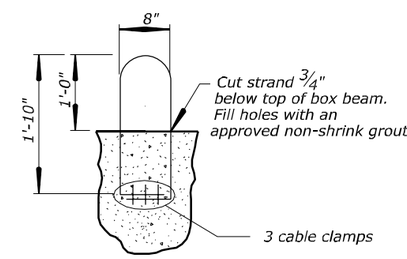

LIFTING EYE

No Scale

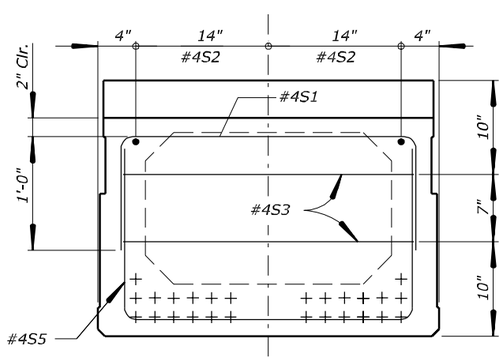

VIEW A-A

SCALE : 1 1/2" = 1'

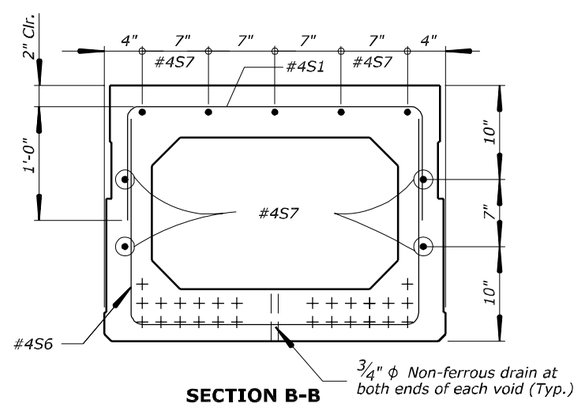

SECTION B-B

SCALE : 1 1/2" = 1'

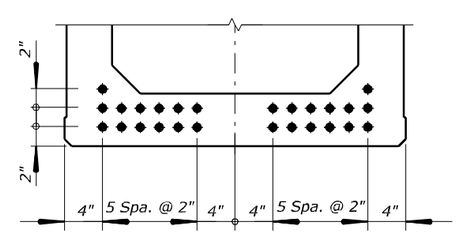

PRESTRESSING STRAND PATTERN

SCALE : 1 1/2" = 1'

(26 - 1/2" dia. straight strands)

U.S. DEPARTMENT OF TRANSPORTATION
FEDERAL HIGHWAY ADMINISTRATION
EASTERN FEDERAL LANDS HIGHWAY DIVISION

FLORIDA PANTHER NATIONAL WILDLIFE REFUGE

BRIDGE OVER DRAINAGE CANAL

BOX BEAM

NO.	DATE	BY	REVISIONS	NO.	DATE	BY	REVISIONS	DESIGNED BY	DRAWN BY	CHECKED BY	SCALE	PROJECT TEAM LEADER	BRIDGE DRAWING	DATE	DRAWING NO.
								LN	LN	QN	As shown	QUINN NGUYEN	6 of 9	January 2008	

ACTUAL FILE NAME: R06-BOX.DGN

M:\Projects\refuge\fl\flpl0(1)\bridge\Microsta\FINAL\Oprojects.dgn

4:18:14 PM

4/30/2008

REGION	STATE	PROJECT	SHEET NO.
SE	FL	FWS FLP 10(1)	R07

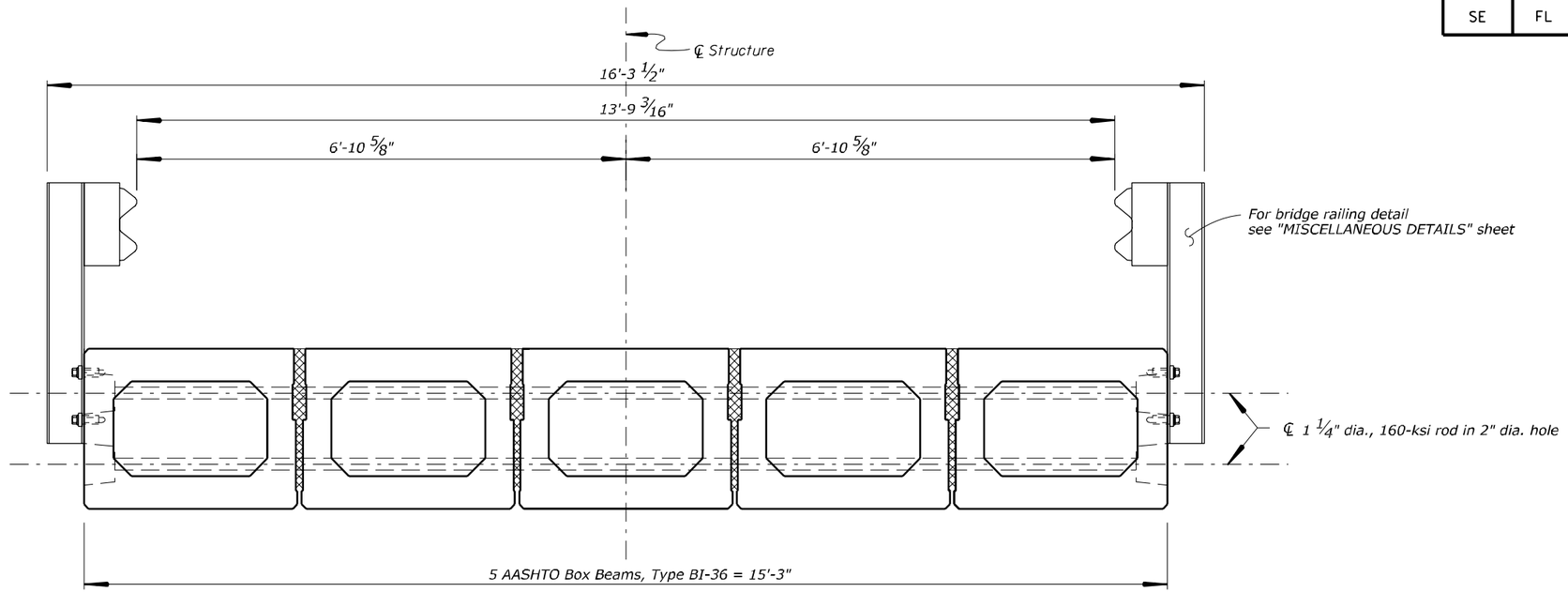

TYPICAL SECTION
Scale: 1" = 1'-0"

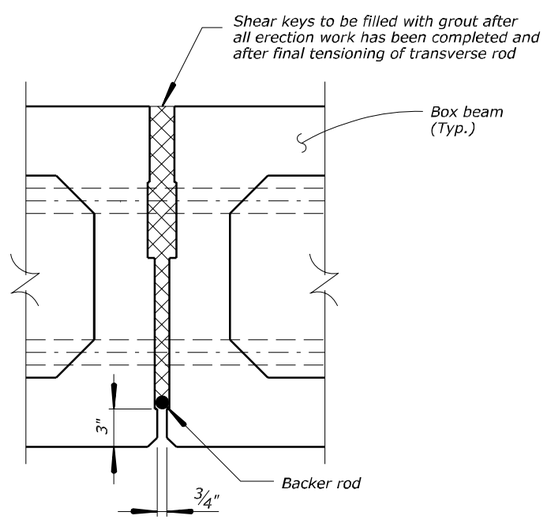

SHEAR KEY DETAIL
Scale: 1" = 1'-0"

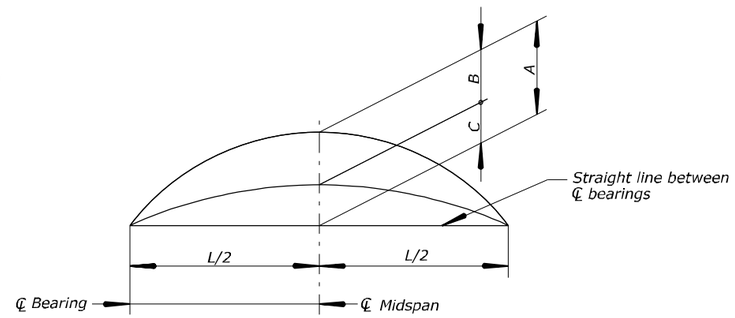

A = estimated camber due to prestress and self weight of the unit only
B = estimated dead load deflection due to railing
C = net final camber

CAMBER TABLE (in.)			
	A	B	C
Midspan	1.44	0.24	1.20

CAMBER DIAGRAM
No Scale

U.S. DEPARTMENT OF TRANSPORTATION
FEDERAL HIGHWAY ADMINISTRATION
EASTERN FEDERAL LANDS HIGHWAY DIVISION

FLORIDA PANTHER NATIONAL WILDLIFE REFUGE

BRIDGE OVER DRAINAGE CANAL

TYPICAL SECTION

NO.	DATE	BY	REVISIONS	NO.	DATE	BY	REVISIONS	DESIGNED BY	DRAWN BY	CHECKED BY	SCALE	PROJECT TEAM LEADER	BRIDGE DRAWING	DATE	DRAWING NO.
								LN	LN	QN	As shown	QUINN NGUYEN	7 of 9	January 2008	

ACTUAL FILE: R07-TYPXS.DGN
4/30/2008 4:8:34 PM M:\Projects\refuge\fnf\pl01\bridge\Microsta\FINAL\projectS.dgn

REGION	STATE	PROJECT	SHEET NO.
SE	FL	FWS FLP 10(1)	R08

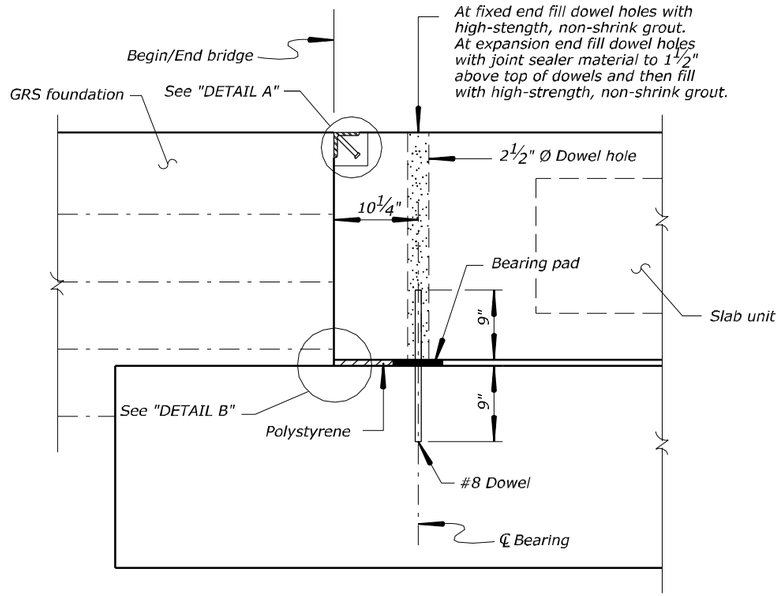

SECTION AT ABUTMENT

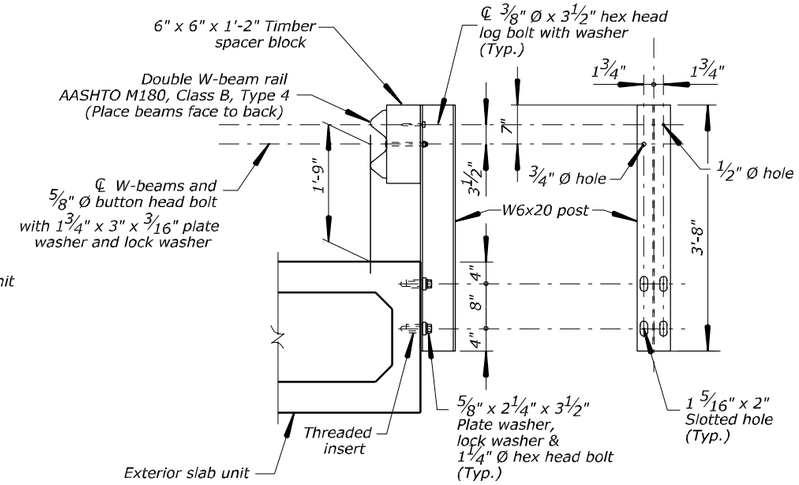

RAILING DETAILS

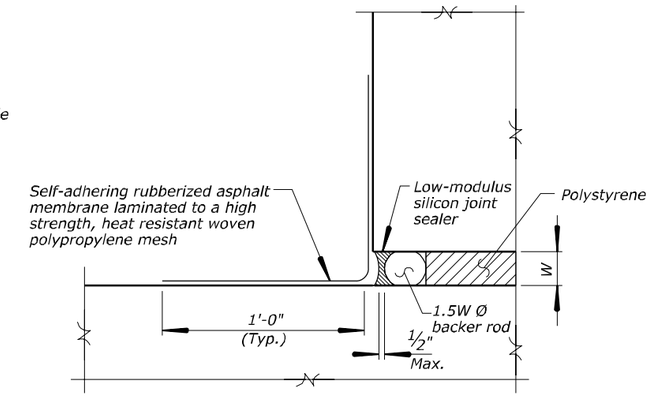

DETAIL B

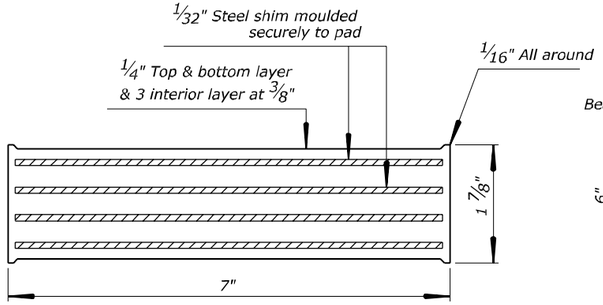

BEARING PAD SECTION

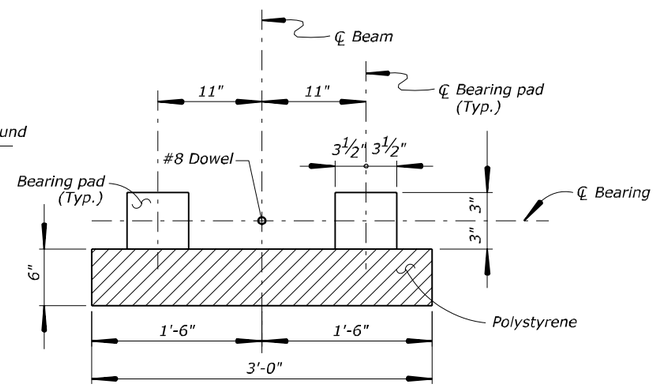

BEARING PAD LAYOUT
2 - at each end
20 - total

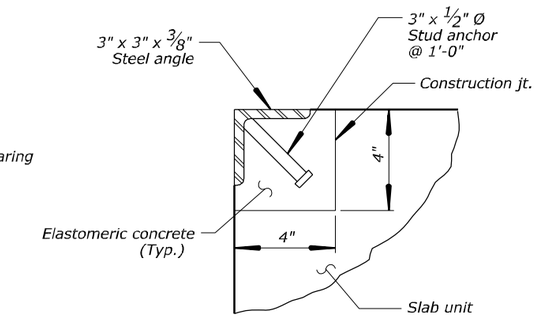

DETAIL A

Notes:

1. Timber spacer block shall comply with the requirements of AASHTO M168 and shall be pressure treated with wood presevative in accordance with AASHTO M133 using a chromated copper arsenate preservative at a minimum net retention of 0.60 pounds per cubic foot.
2. W6x20 spacer blocks shall be an acceptable substitute for the timber spacer blocks shown.
3. All hardware embedded in concrete shall comform to ASTM A307 and shall be galvanized after fabrication in accordance with ASTM A123. All other hardware shall comform to ASTM A325.
4. All steel posts, plate washers and W6x20 spacer blocks (if used) shall comform to ASTM A588.
5. Rail elements at expansion splice shall be lapped in the direction of traffic.

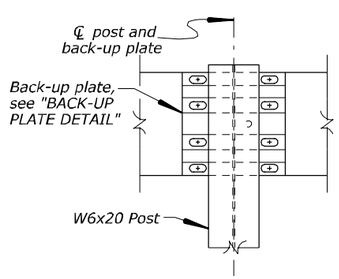

EXPANSION SPLICE DETAIL

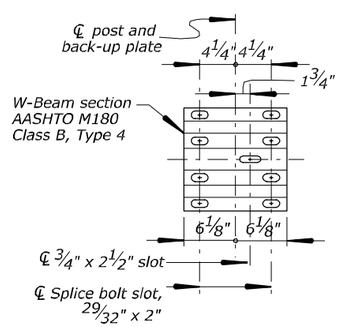

BACK-UP PLATE DETAIL

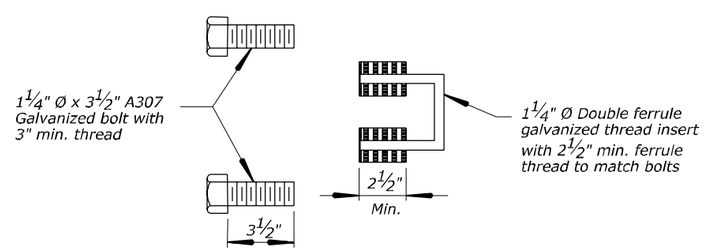

THREADED INSERT DETAIL

U.S. DEPARTMENT OF TRANSPORTATION
FEDERAL HIGHWAY ADMINISTRATION
EASTERN FEDERAL LANDS HIGHWAY DIVISION

FLORIDA PANTHER NATIONAL WILDLIFE REFUGE

BRIDGE OVER DRAINAGE CANAL

MISCELLANEOUS DETAILS

NO.	DATE	BY	REVISIONS	NO.	DATE	BY	REVISIONS	DESIGNED BY	DRAWN BY	CHECKED BY	SCALE	PROJECT TEAM LEADER	BRIDGE DRAWING	DATE	DRAWING NO.
								LN	LN	QN	No Scale	QUINN NGUYEN	8 of 9	January 2008	

ACTUAL FILE: R08-MISC.DGN
4/30/2008 4:18:53 PM M:\Projects\refuge\fnf\plot\bridge\Microsta\FINAL\ProjectS.dgn

REGION	STATE	PROJECT	SHEET NO.
SE	FL	FWS FLP 10(1)	R09

REINFORCING STEEL SCHEDULE					DIMENSION TABLE															
ABUTMENT																				
BAR MK	SIZE	TYPE	PIN SZ	LOCATION	QTY	LENGTH	WEIGHT	A	B	C	D	E	F	G	H	J	K	O	R	V
#8A1	8	STR																		
#5A2	5	17	3¾"																	
#4A3	4	17	3⅛"																	
#4A4	4	STR																		
#5A5	5	STR																		
SUBTOTAL																				

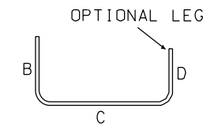

TYPE 17

U.S. DEPARTMENT OF TRANSPORTATION
FEDERAL HIGHWAY ADMINISTRATION
EASTERN FEDERAL LANDS HIGHWAY DIVISION

FLORIDA PANTHER NATIONAL WILDLIFE REFUGE

BRIDGE OVER DRAINAGE CANAL

REINFORCING STEEL BAR LIST

NO.	DATE	BY	REVISIONS	NO.	DATE	BY	REVISIONS	DESIGNED BY	DRAWN BY	CHECKED BY	SCALE	PROJECT TEAM LEADER	BRIDGE DRAWING	DATE	DRAWING NO.
								LN	LN	QN	NA	QUINN NGUYEN	9 of 9	January 2008	

ACTUAL FILE: R09-REBAR.DGN
4/30/2008 4:19:13 PM M:\Projects\refuge\fl\fl01\bridge\Microsta\FINAL\0projects.dgn

REG	STATE	PROJECT	SHEET NO.	TOTAL SHEETS
SE	FL	FWS FLP 10(1)	10	

Length of Bridge = 92'-0"

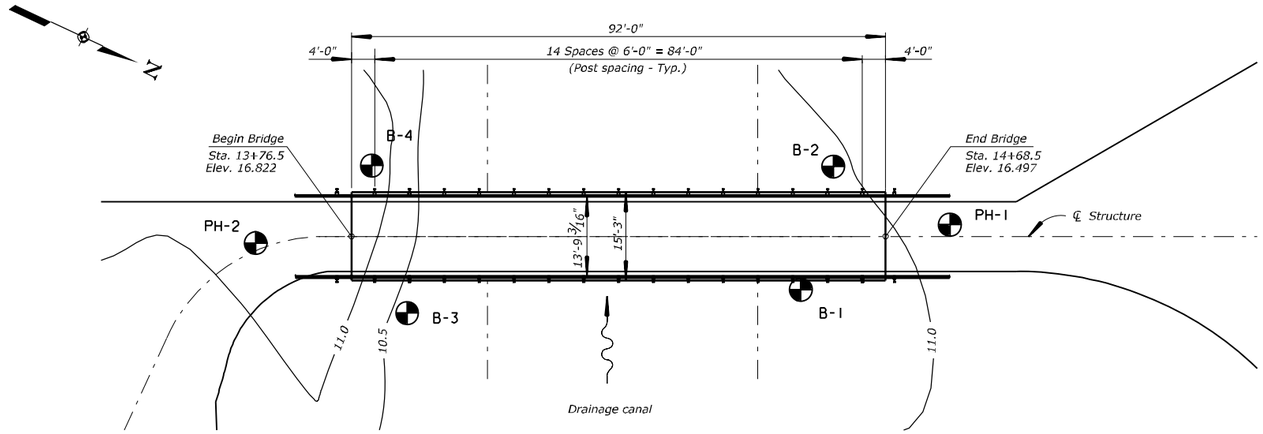

PLAN

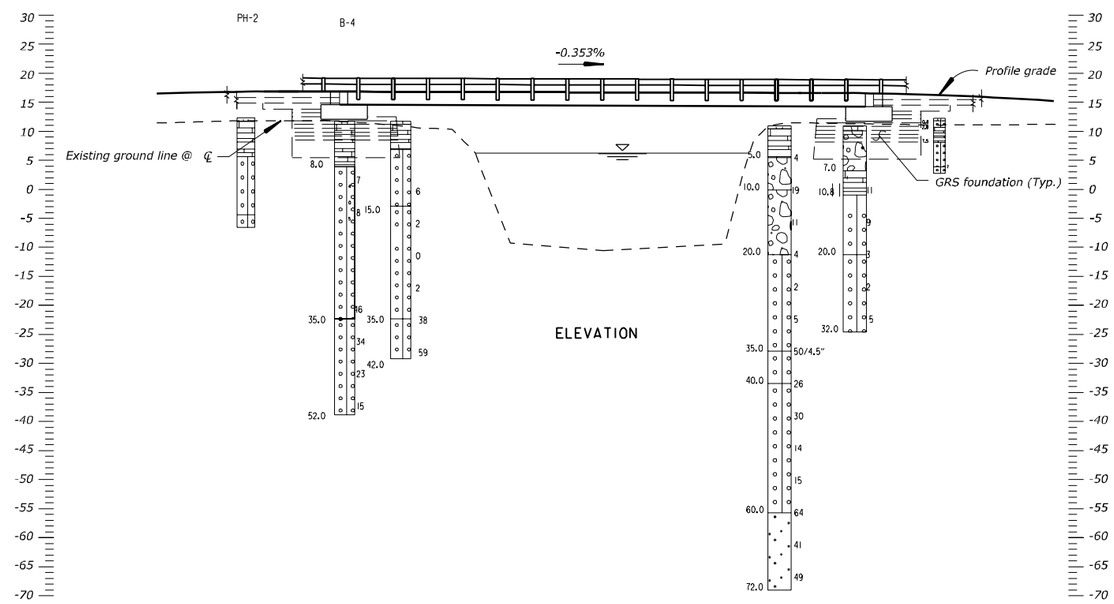

ELEVATION

THE BORING LOGS ON THIS SHEET REPRESENT THE SUBSURFACE CONDITIONS ENCOUNTERED AT THE BORING LOCATIONS SHOWN. SUBSURFACE CONDITIONS MAY VERY BETWEEN THESE LOCATIONS.

SYMBOL	TYPE OF MATERIAL	SYMBOL	TYPE OF MATERIAL
	LIMESTONE		
	GRAVEL		
	SILTY SAND		
	SAND		

TEST BORING

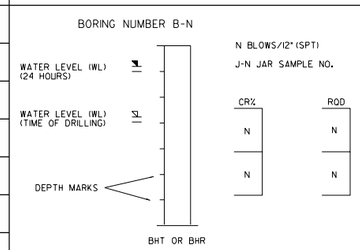

MISCELLANEOUS

1. SPT - STANDARD PENETRATION TEST - AASHTO T206-74
2. R - REFUSAL, SPT 100 BLOWS/12"
3. CR% - PERCENT OF RECOVERY
4. RQD - ROCK QUALITY DESIGNATION
5. BHT - BORE HOLE TERMINATED
6. BHR - BORE HOLE REFUSAL
7. GEOPHYSICAL TEST SITE: SEISMIC S RESISTIVITY R

SCALE

0 10 20
SCALE IN FEET

U.S. DEPARTMENT OF TRANSPORTATION
FEDERAL HIGHWAY ADMINISTRATION
EASTERN FEDERAL LANDS HIGHWAY DIVISION
STERLING, VIRGINIA

BORING LOCATION PLAN AND SUBSURFACE PROFILE

BRIDGE #
TO LUCKY LAKE ROAD
OVER DRAINAGE CANAL

PROJECT FLP 10(1)
GEOTECHNICAL REPORT NO. 07-07

4/30/2008 4:19:34 PM M:\Projects\refuge\f\flp10(1)\bridge\Microsta\FINAL\Oproject5.dgn

REG	STATE	PROJECT	SHEET NO.
SE	FL	FWS-FLP 10(1)	S1

NOTE:

1. Use drainage ditch installation for low flow conditions only when specified on Erosion Control Plan.
2. Alternate preassembled silt fence options (geotextile, type V-B) will be allowed as long as specified dimensions are satisfied. Follow manufacturer's recommendations for installation procedures. All types must ensure silt fence remains attached to, and does not slide down, supporting posts.
3. Install silt fence along ground contours. Curve ends of silt fence upgrade to prevent water from running around the ends.
4. 10 ft. (max.) spacing with fence support.
   6 ft. (max.) spacing without fence support.

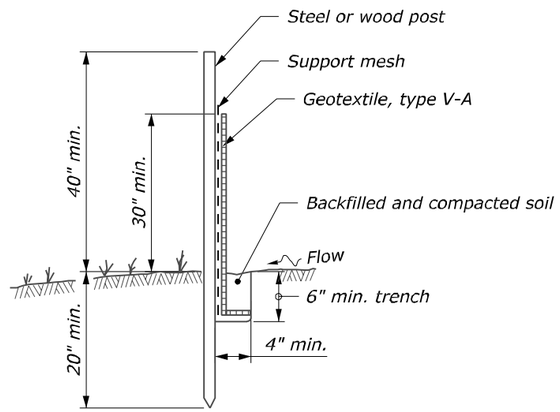

POST AND GEOTEXTILE INSTALLATION DETAIL

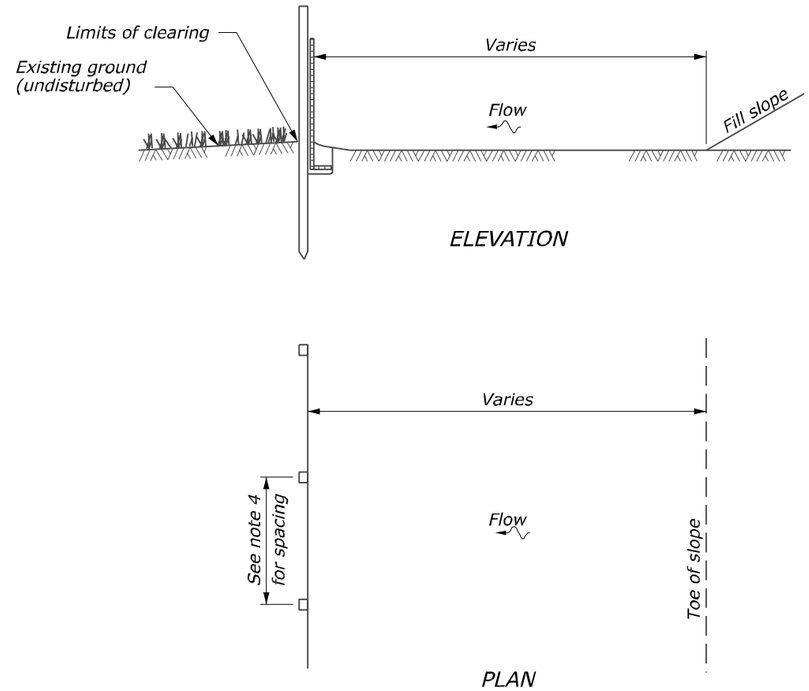

SILT FENCE INSTALLATION AT TOE OF FILL

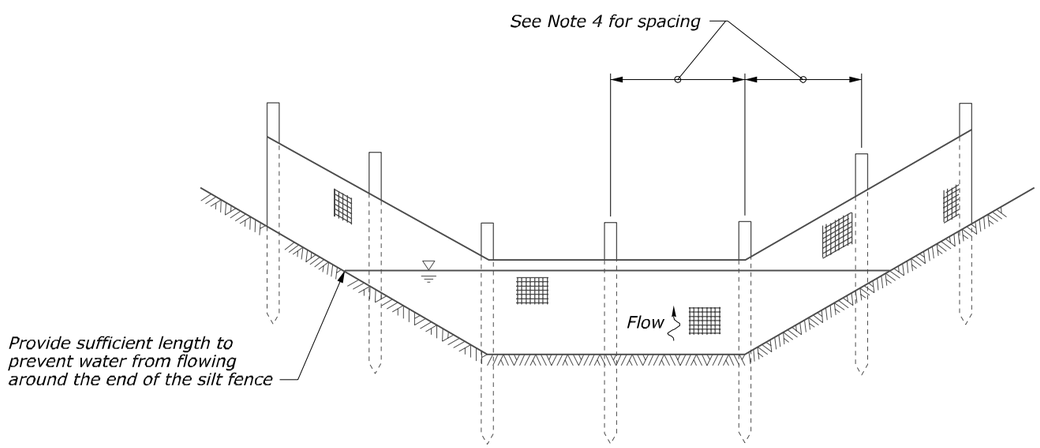

SILT FENCE INSTALLATION IN A DRAINAGE DITCH

See Note 1

NO SCALE

U.S. DEPARTMENT OF TRANSPORTATION
FEDERAL HIGHWAY ADMINISTRATION
FEDERAL LANDS HIGHWAY

U.S. CUSTOMARY STANDARD

SILT FENCE

STANDARD APPROVED FOR USE 6/2005

REVISED:
DRAFT: 10/2006

STANDARD
157-1

4/30/2008 1:38:17 PM M:\Projects\refuge\fl\flp10(1)\proj_dev\CADD\Std-Det\Std-Det\st15701.dgn

REG	STATE	PROJECT	SHEET NO.
SE	FL	FWS-FLP 10(1)	S2

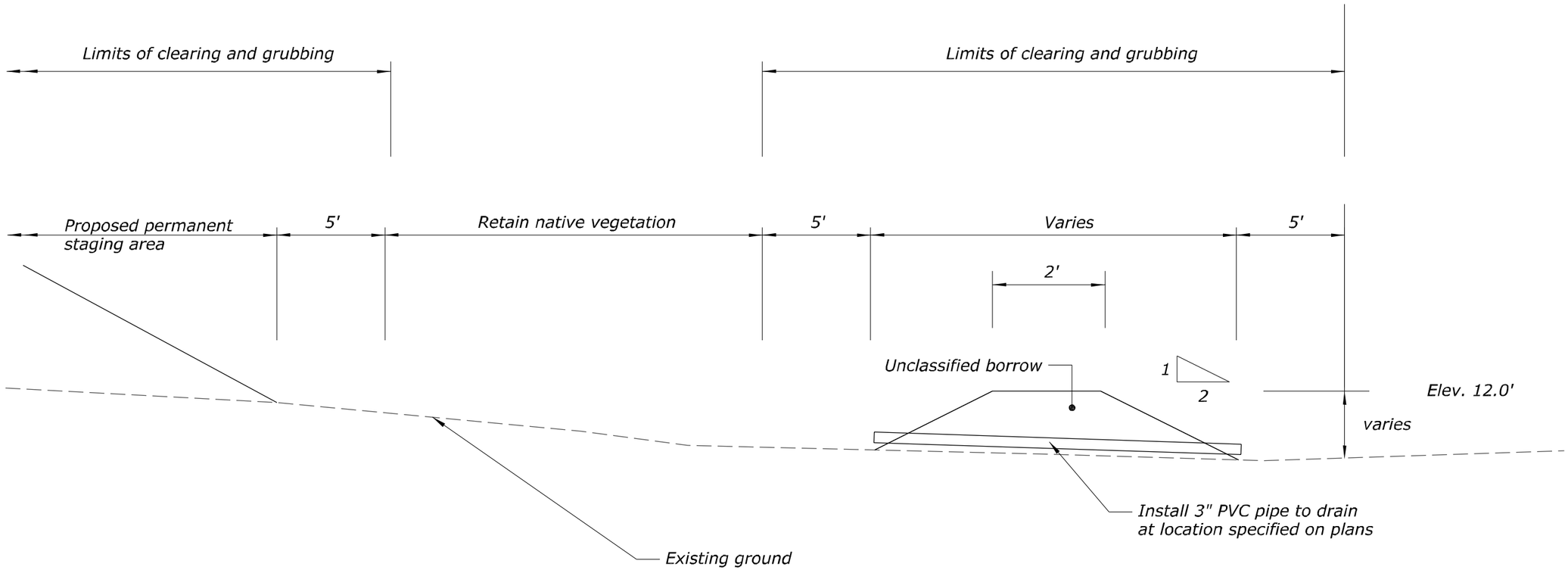

Detail A

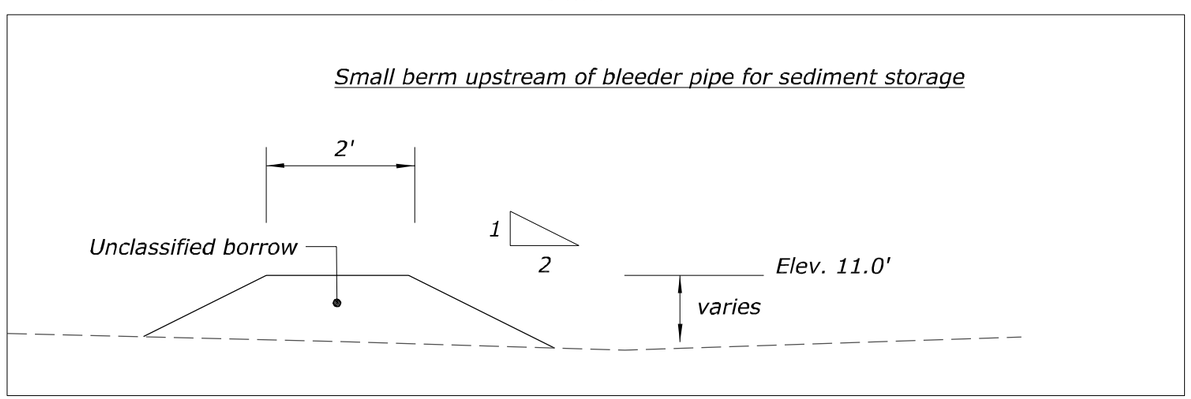

NOT TO SCALE

U.S. DEPARTMENT OF TRANSPORTATION
FEDERAL HIGHWAY ADMINISTRATION
EASTERN FEDERAL LANDS HIGHWAY DIVISION

DETAIL

DETENTION BERM

DETAIL APPROVED FOR USE --/--

REVISED: --/--

DETAIL
E157-A

4/30/2008 1:38:53 PM M:\Projects\refuge\fl\flp10(1)\proj_dev\CADD\Std-Det\Std-Det\dT157A.dgn

REG	STATE	PROJECT	SHEET NO.
SE	FL	FWS-FLP 10(1)	S3

NOTES:

1. *Construct drainage ditches along entrance when required. Install temporary 18" pipe culverts where entrance crosses existing drainage ditches.*
2. *Place Geotextile, Type IIB, over the entire area prior to placing the aggregate base.*

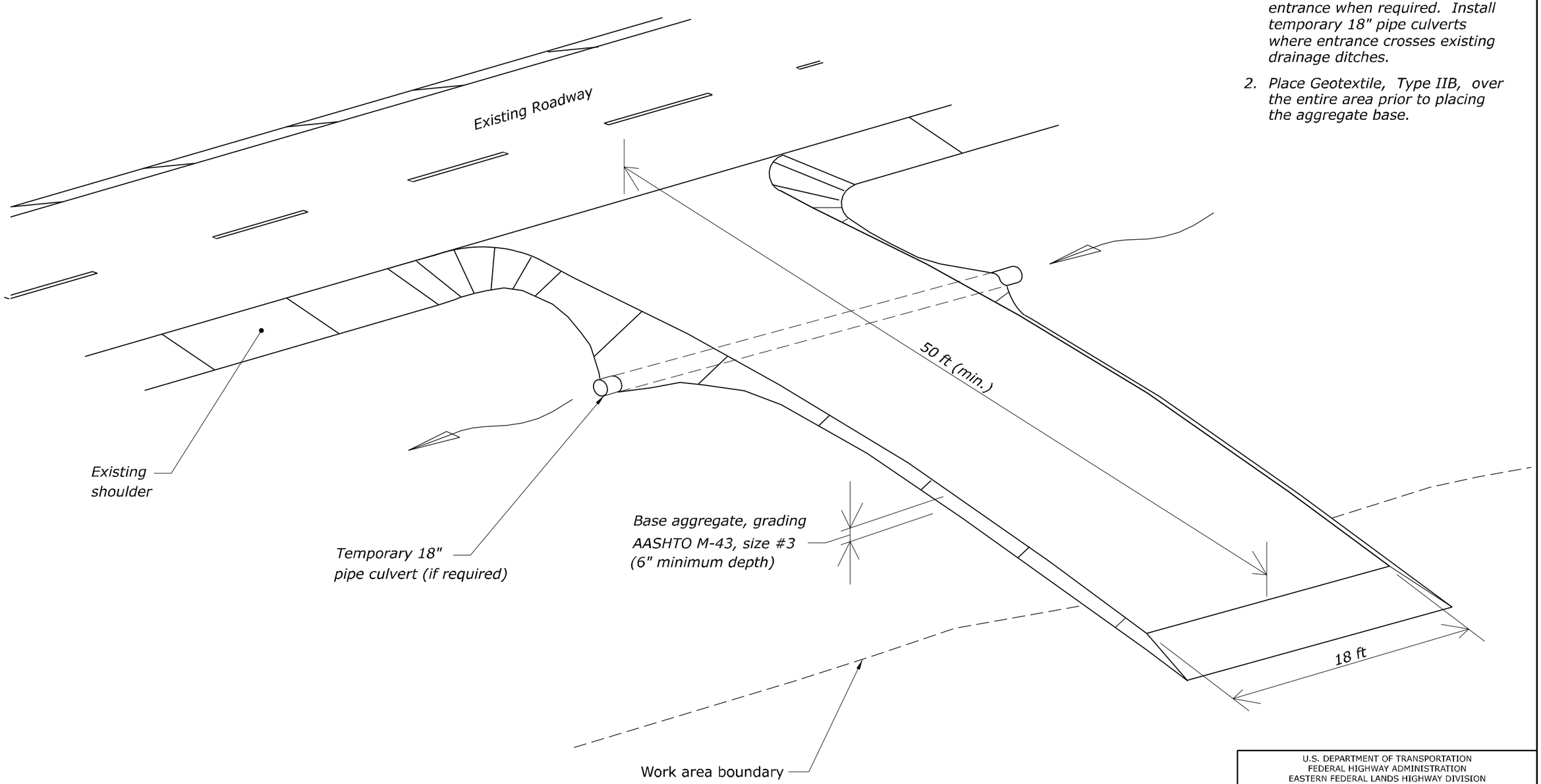

(No Scale)

REVISED: 6/99

U.S. DEPARTMENT OF TRANSPORTATION
FEDERAL HIGHWAY ADMINISTRATION
EASTERN FEDERAL LANDS HIGHWAY DIVISION

DETAIL

STABILIZED CONSTRUCTION ENTRANCE

DETAIL APPROVED FOR USE --/----

DETAIL E157-B

REG	STATE	PROJECT	SHEET NO.
SE	FL	FWS-FLP 10(1)	S4

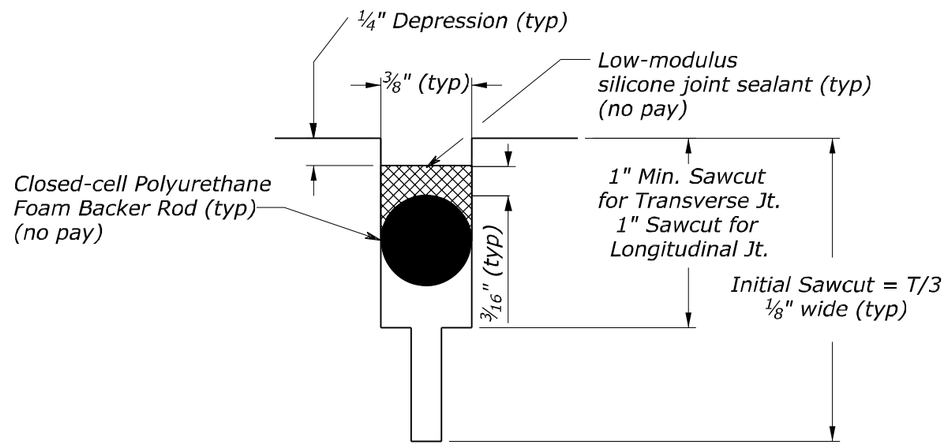

NOTES:

1. "T" = Slab thickness
2. Backer Road width shall be minimum of 25% greater than the width of joint.

NO SCALE

U.S. DEPARTMENT OF TRANSPORTATION
FEDERAL HIGHWAY ADMINISTRATION
EASTERN FEDERAL LANDS HIGHWAY DIVISION
STERLING, VIRGINIA

CONCRETE JOINT DETAIL

DETAIL
615-A

4/30/2008 1:40:05 PM M:\Projects\refuge\fl\fpl011\proj_dev\CADD\Std-Det\Std-Det\d615-Adgn

REG	STATE	PROJECT	SHEET NO.
SE	FL	FWS-FLP 10(1)	S5

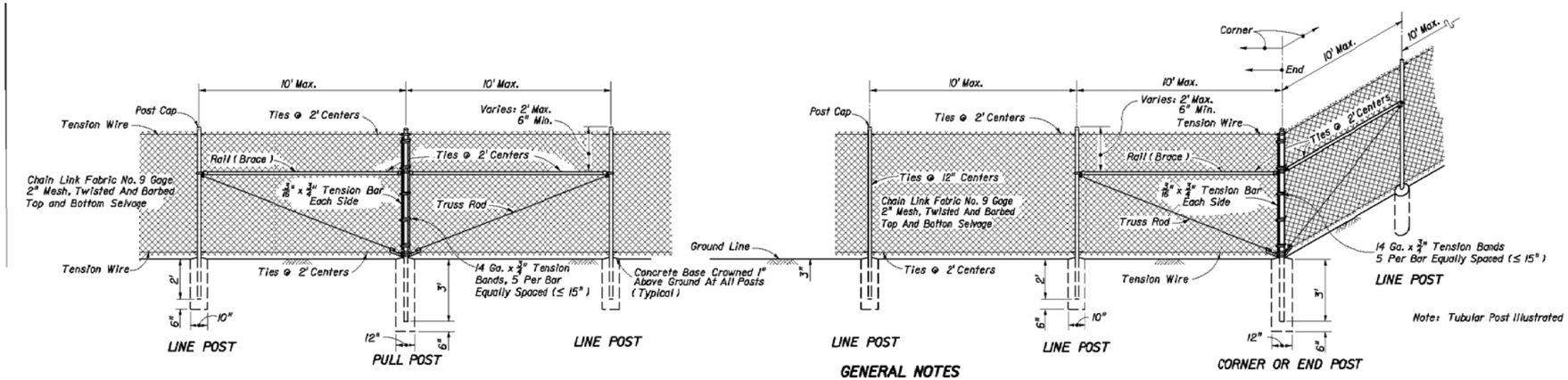

GENERAL NOTES

1. This fence to be used generally in urban areas.
2. For supplemental information refer to Section 550 of FDOT Standard Specifications.
3. Chain link fabric, posts, rails, truss rods, tension wires, tie wires, stretcher bars, gates and all miscellaneous fittings and hardware shall meet the requirements of AASHTO M181 unless otherwise specified by this index. Stipulated AASHTO and ASTM signify current reference.
4. Fence Component Options:
   A. Line post options:
      (1) Galvanized steel pipe, Schedule 40- $1\frac{1}{2}$" nominal dia. zinc galvanized at the rate of 1.8 oz./ft^2.: ASTM A53 Table X 2, ASTM F1083, and AASHTO M111.
      (2) Aluminum coated steel pipe; ASTM A53, X 2 Tables Schedule 40; $1\frac{1}{2}$" nominal dia., 1.90" OD; coated at the rate 0.40 oz./ft.: AASHTO M111.
      (3) Aluminum alloy pipe- 2" nominal dia.: ASTM B241 or B221, Alloy 6063, T6.
      (4) Steel H-Beam- $1\frac{5}{8}$" x $1\frac{5}{8}$": Zinc Galv. 1.8 oz./ft.: AASHTO M111 and Detail.
      (5) Aluminum alloy H-Beam- $1\frac{5}{8}$" x $1\frac{5}{8}$": Detail.
      (6) Steel C- $1\frac{5}{8}$" x $1\frac{5}{8}$": Galv.: 1.8 oz./ft. zinc; AASHTO M111; or, 0.9 oz./ft^2 zinc- 5% aluminum-mischmetal: ASTM F1043 and Detail.
      (7) Resistance welded steel pipe; 50,000 psi min. yield strength ASTM A569/A569M, A653/A653M or undepleted stock of discontinued A446/A446M base materials; ASTM F669 Group IV (Alternative Design); fence industry 2" OD, $1\frac{1}{2}$" NPS, 1.900" dec. equiv., 0.120" min. wall thick. and min. wt. 2.28 lb./ft.; with ASTM F1043 metric equivalent internal coating Types A, B, C or D and external coating Types A, B, or C; the chromate conversion coating of external Type B shall have a thickness of 15 µg/in^2 min. and the polymer film topcoat shall have a thickness of 0.0003" min.; internal and external coatings are not restricted to the combinations of Table 2, ASTM F1043.
   B. Corner, end, and pull post options:
      (1) Galvanized steel pipe, Schedule 40- 2" nominal dia. zinc galvanized at the rate of 1.8 oz./ft^2.: ASTM A53 Table X 2, ASTM F1083, and AASHTO M111.
      (2) Aluminum coated steel pipe; ASTM A53 steel, X 2 Tables Schedule 40; 2" nominal dia., 2.375" OD; coated at the rate 0.40 oz./ft.: AASHTO M111.
      (3) Aluminum alloy pipe- $2\frac{1}{2}$" nominal dia.: ASTM B241 or B221, Alloy 6063, T6.
      (4) Resistance welded steel pipe; 50,000 psi min. yield strength ASTM A569/A569M, A653/A653M or undepleted stock of discontinued A446/A446M base materials; ASTM F669 Group IV (Alternative Design); fence industry $2\frac{1}{2}$" OD, 2" NPS, 2.375" dec. equiv., 0.130" min. wall thick. and min. wt. 3.117 lb./ft.; with ASTM F1043 metric equivalent internal coating Types A, B, C or D and external coating Types A, B, or C; the chromate conversion coating of external Type B shall have a thickness of 15 µg/in^2 min. and the polymer film topcoat shall have a thickness of 0.0003" min.; internal and external coatings are not restricted to the combinations of Table 2, ASTM F1043.
   C. Rail options:
      (1) Galvanized steel pipe, Schedule 40- $1\frac{1}{4}$" nominal dia. zinc galvanized at the rate of 1.8 oz./ft^2.: ASTM A53 Table X 2, ASTM F1083, and AASHTO M111.
      (2) Aluminum coated steel pipe; ASTM A53 steel, X 2 Tables Schedule 40; $1\frac{1}{4}$" nominal dia., 1.660" OD; coated at the rate 0.40 oz./ft.: AASHTO M111.
      (3) Aluminum alloy pipe- $1\frac{1}{4}$" nominal dia.: ASTM B241 or B221, Alloy 6063, T6.
      (4) Resistance welded steel pipe; 50,000 psi min. yield strength ASTM A569/A569M, A653/A653M or undepleted stock of discontinued A446/A446M base materials; ASTM F669 Group IV (Alternative Design); fence industry $1\frac{3}{8}$" OD, $1\frac{1}{4}$" NPS, 1.660" dec. equiv., 0.111" min. wall thick. and min. wt. 1.836 lb./ft.; with ASTM F1043 metric equivalent internal coating Types A, B, C or D and external coating Types A, B, or C; the chromate conversion coating of external Type B shall have a thickness of 15 µg/in^2 min. and the polymer film topcoat shall have a thickness of 0.0003" min.; internal and external coatings are not restricted to the combinations of Table 2, ASTM F1043.

cont. ....

   D. Chain link fabric options (2" mesh with twisted and barbed selvage top and bottom for all options except as described in Note No. 10):
      (1) AASHTO M181 Type I - Zinc Coated Steel, No. 9 gage (coated wire diameter), coated at the rate of 1.8 oz./ft^2 (M181 Class D 2.0 oz./ft^2 modified to 1.8 oz./ft^2).
      (2) AASHTO M181 Type II - Aluminum Coated Steel, No. 9 gage (coated wire diameter), coated at the rate of 0.40 oz./ft^2.
      (3) AASHTO M181 Type IV- Polyvinyl Chloride (PVC) Coated Steel, No. 9 gage (coated core wire diameter), core wire-zinc coated steel. PVC coating: M181 Class A (either extruded or extruded and bonded) or Class B (bonded). See table right. Unless the plans call for M181 standard colors medium green, dark green or black the coating color shall be soft gray matching that of No. 36622 of Federal Standard 595a.
   E. Tension wire options:
      (1) Steel wire No. 7 gage zinc galvanized at the rate of 1.2 oz./ft^2.: AASHTO M181.
      (2) Aluminum alloy wire with a diameter of 0.1875" or larger conforming to the requirements of ASTM B211, Alloy 5056 Temper H38, or, Alclad Alloy 5056 Temper H192.
      (3) Aluminum coated steel wire No. 7 gage coated at the rate of 0.40 oz./ft^2.: AASHTO M181.
   F. Tie wire and hog ring options:
      (1) Steel wire No. 9 gage zinc galvanized at the rate of 1.2 oz./ft^2.
      (2) Aluminum alloy wire with a diameter of 0.1443" or larger conforming to the requirements of ASTM B211, Alloy 5056 Temper H38, or, Alclad Alloy 5056 Temper H192.
      (3) Aluminum coated steel wire No. 7 gage coated at the rate of 0.40 oz./ft^2.
5. Unless a specific material is called for in the plans the Contractor may elect to use either a single type of material or a combination of material types from the component options listed above. Combinations of optional materials are restricted as follows: (a) Only one fabric optional material will be permitted between corner and/or end post assemblies. (b) Only one line post optional material will be permitted between corner and/or end post assemblies. (c) Pull post assemblies shall be optional materials identical to either the line post optional material or the corner and end post assembly optional material; but, pull post assemblies shall be the same optional material between any set of corner and/or end post assemblies.
6. Concrete for bases shall be Class I concrete as specified in Section 347 of the Standard Specifications or a packaged, dry material meeting the requirements of a concrete under ASTM C-387. Materials for Class I concrete may be proportioned by volume and/or by weight.
7. Line posts are to be set in concrete as detailed above or by the following methods:
   (a) In accordance with special details and/or as specifically described in the contract plans and specifications.
   (b) In accordance with ASTM F567 Subsections 5.4 through 5.10 as approved by the Engineer.
   (c) Posts mounted on concrete structure or solid rock shall be mounted in accordance with the base plate detail "Fence Mounting On Concrete Endwalls And Retaining Wall", Sheet 2; or, by embedment in accordance with ASTM F567 Subsection 5.5.

   End, pull and corner post assemblies shall be set in concrete as detailed above for all soil conditions other than solid rock. Posts within assemblies that are located on concrete structures or solid rock shall be set by base plate or by embedment as prescribed under (b) above for line posts.

   Line and assembly posts set in concrete bases shall be set an additional 3" in depth for each 1' of fence height greater than 6'.
8. Pull posts shall be used at breaks in vertical grades of 15° or more, or at approximately 350' centers except that this maximum interval may be reduced by the Engineer on curves where the curve is greater than 3°.
9. Corner posts are to be installed at all horizontal breaks in fence at 15° or more and as required at vertical breaks over 15° as determined by the Engineer.
10. When fence has an installed top of fabric height less than 6', knuckled top and bottom selvages shall be used unless the plans specifically identify locations for twisted selvage fabrics.
11. Unless sliding gates or special gates are called for in the plans, all gates shall be chain link swing gates meeting the material requirements described above as approved by the Engineer. Payment shall include the gates, single or double, all necessary hardware for installation and any additional length and/or size for posts at the opening. Gates shall be paid for under the contract unit price for Fence Gates, EA.
12. For construction purposes corner post assemblies shall consist of one corner post, two braces, two truss rods, and all necessary fittings and hardware as detailed above.

    End post assemblies shall consist of one end post, one brace, one truss rod and all necessary fittings and hardware as detailed above.
13. All posts, tension wires, chain link fabric, tie wires, Class I concrete, and all miscellaneous fittings and hardware to be included in the cost for Fencing, LF.

TYPE IV VINYL COATED FABRIC

AASHTO M181 Table 4 Redefined As Follows

Specified Diameter Of Metallic Coated Core Wire			Minimum Weight Of Zinc Coating		PVC Thickness Range			
					M181 Class A (Extruded Or Extruded And Bonded Coating)		M181 Class B (Bonded Coating)	
in.	mm	gage	oz./ft.^{2}	g/m^2	in.	mm	in.	mm
0.148	3.77	9	0.30	92	0.015 to 0.025	0.38 to 0.64	0.006 to 0.010	0.15 to 0.25

DESIGN NOTE

This index details fencing that is constructed with chain link fabric 6' (nominal) in height and with specific ground clearance. For fencing of different height or installation details, the fence shall be fully detailed in the Contract plans.

NO SCALE

U.S. DEPARTMENT OF TRANSPORTATION
FEDERAL HIGHWAY ADMINISTRATION
FEDERAL LANDS HIGHWAY

STANDARD

Fence Detail

1 OF 2

STANDARD APPROVED FOR USE

REVISED:

STANDARD
619-A

4/30/2008 1:40:48 PM M:\Projects\refuge11\flp10(1)\proj_dev\CADD\Std-Det\Std-Det\d619A.dgn

REG	STATE	PROJECT	SHEET NO.
SE	FL	FWS-FLP 10(1)	S6

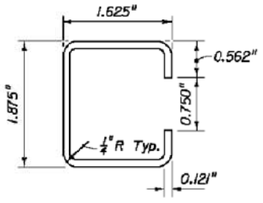

Galv. Wt. Per. Ft. = 2.34# ±5%
Yeild PSI (Min.) 45,000

STANDARD WALL

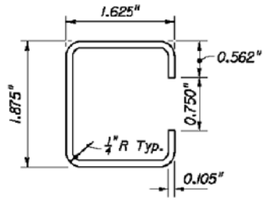

Galv. Wt. Per. Ft. = 1.85# ±5%
Yeild PSI (Min.) 45,000

THINWALL

OPTIONAL "C" LINE POST

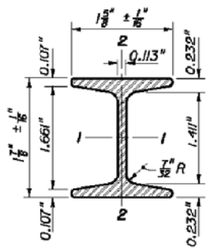

	STEEL		ALUMINUM	
Area (Sq. In.)	724		724	
Weight (Lb./Ft.)	2.72 ±5% (Galv.)		0.91 ±5%	
Surface Area (SF/Ft.)	0.776		0.776	
Tensile Strength (psi Min.)	80,000		30,000	
Yielding Point (psi Min.)	48,000		25,000	
	Axes		Axes	
	1-1	2-2	1-1	2-2
Moment Of Inertia	0.428	0.101	0.428	0.101
Section Modulus	0.456	0.124	0.456	0.124
Rad. Of Gyration	0.779	0.373	0.779	0.373

OPTIONAL 1 7/8" x 1 5/8" H-BEAM LINE POST

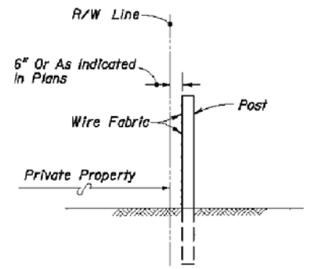

FENCE POSITION AT LOCATIONS WITHOUT FRONTAGE ROADS

(REFER TO DETAIL PLANS FOR FENCE POSITION AT LOCATIONS WITH FRONTAGE ROADS)

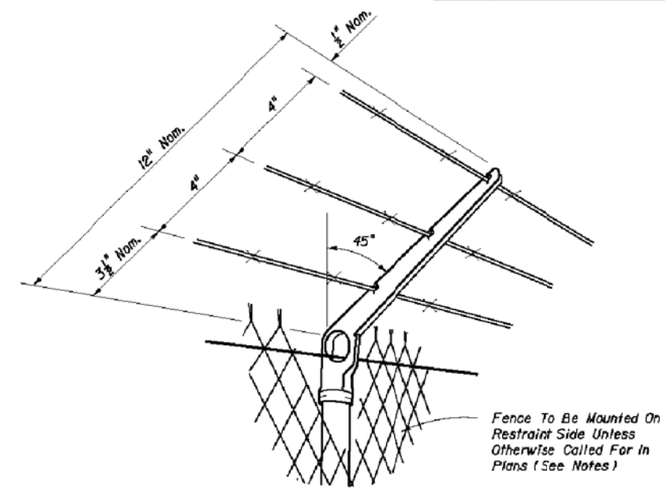

NOTES

Attachments to be used only when called for in the plans.

Attachments to extend in direction of restraint. Unless otherwise called for in plans, direction of restraint will be as follows:

(a.) Outward on limited access right of way line.
(b.) Outward on controlled access right of way line.
(c.) Outward from utilities and hazardous facilities located within highway right of way.
(d.) Outward from lateral ditches, outfalls, retention basins, canals, borrow areas and similar support facilities.
(e.) Inward on pedestrian ways.

The cap-arm shall be designed to provide a drive fit over the top of posts and to exclude moisture in posts with tubular sections.

BARB WIRE ATTACHMENT

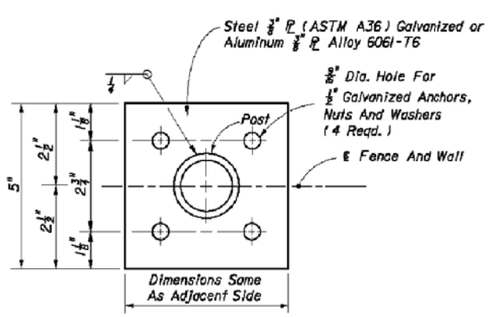

TOP VIEW
FOUR ANCHOR OPTION

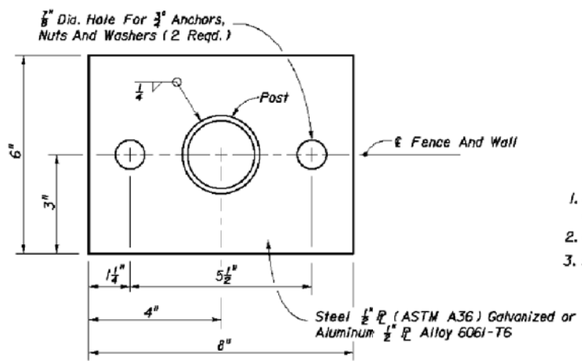

TOP VIEW
TWO ANCHOR OPTION

BASE PLATE AND ANCHOR NOTES:

1. Base plate identical for line, pull, end and corner posts and shall be considered an integral part of the respective posts for basis of payment.
2. Post to be plumbed by grout shim under base plate.
3. Anchors (Galvanized Steel):
   12" Cast In Place, 10 1/2" Embedment:
   Headed Bolts, U-Bolts or Cluster Plates.
   8" Adhesive Anchors, 6" Min. Embedment.*
   *Adhesive anchors shall be headless anchor bolts set in drilled holes with an Adhesive Material System in accordance with Specification Sections 416 and 937; drilled holes shall be 1/8" larger in diameter than the anchor bolt.
   Expansion Bolts Not Permitted.

FENCE MOUNTING ON CONCRETE ENDWALL AND RETAINING WALLS

NO SCALE

U.S. DEPARTMENT OF TRANSPORTATION
FEDERAL HIGHWAY ADMINISTRATION
FEDERAL LANDS HIGHWAY

STANDARD

Fence Detail

2 OF 2

STANDARD APPROVED FOR USE

REVISED:

STANDARD
619-A

4/30/2008 1:41:09 PM M:\Projects\refuge\fl\flp10(1)\proj_dev\CADD\Std-Det\Std-Det\dfs19A.dgn

REG	STATE	PROJECT	SHEET NO.
SE	FL	FWS-FLP 10(1)	S7

ROADSIDE SIGN RURAL DISTRICT

NO SHOULDER

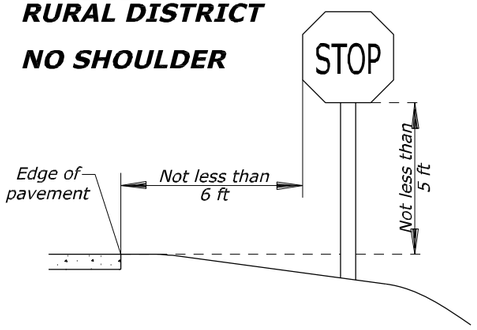

WARNING SIGN WITH ADVISORY SPEED PLAQUE RURAL DISTRICT

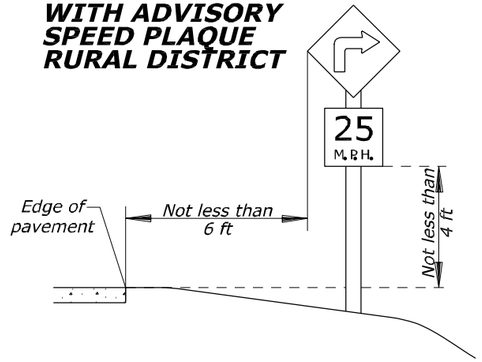

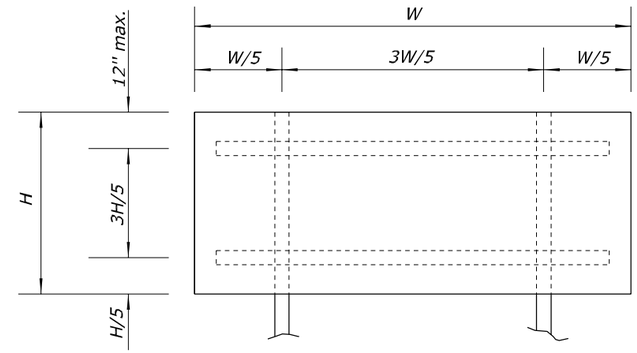

DOUBLE POST

ROADSIDE SIGN BUSINESS OR RESIDENCE DISTRICT

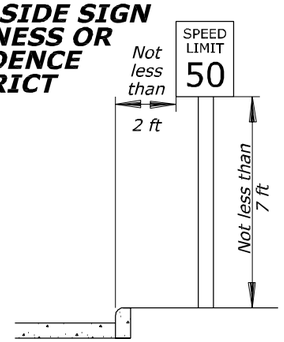

ROADSIDE SIGN RURAL DISTRICT

WITH SHOULDER

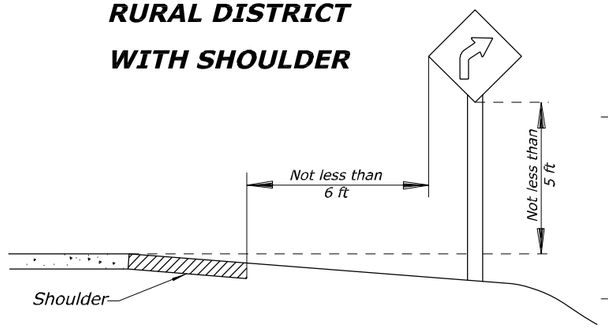

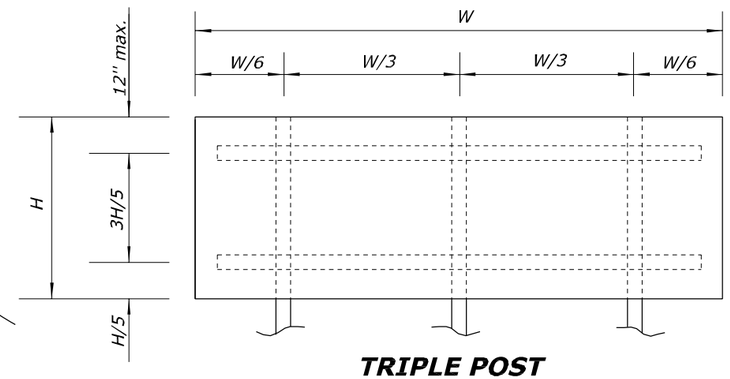

TRIPLE POST

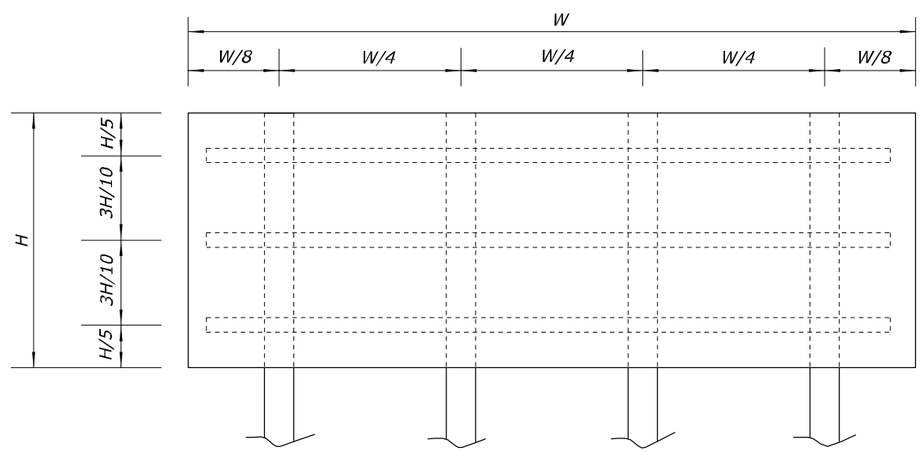

QUADRUPLE POST

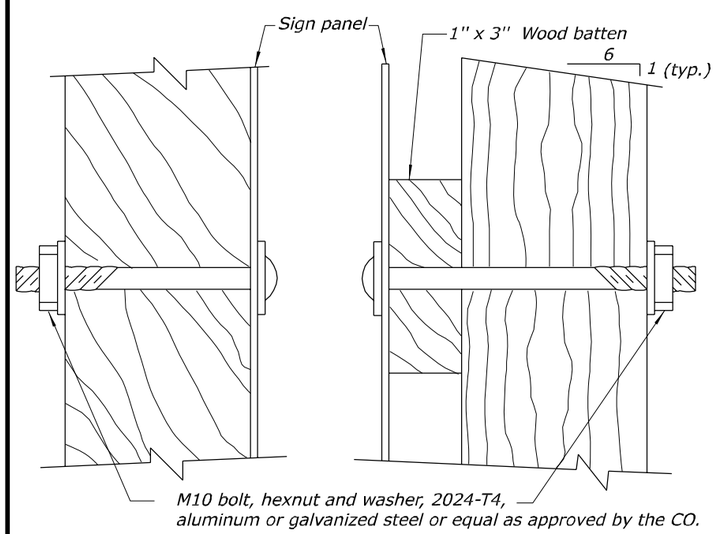

WITHOUT BATTEN

WITH BATTEN

FASTENER DETAIL

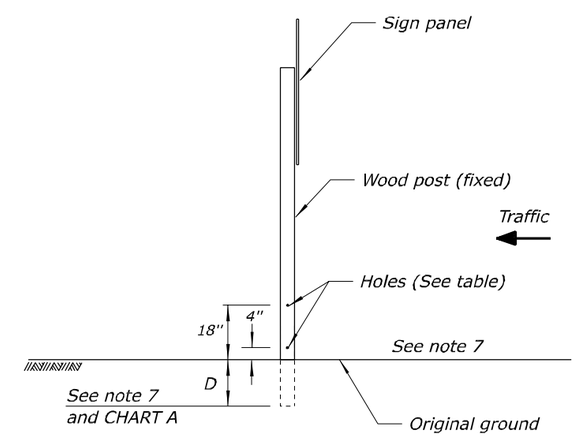

BREAKAWAY SUPPORT DETAIL

NO SCALE

U.S. DEPARTMENT OF TRANSPORTATION
FEDERAL HIGHWAY ADMINISTRATION
EASTERN FEDERAL LANDS HIGHWAY DIVISION

U.S. CUSTOMARY DETAIL

SIGN STRUCTURES

DETAIL APPROVED FOR USE

REVISED: 03/07

DETAIL E633-01

4/30/2008 1:41:42 PM M:\Projects\refuge\fl\fp\0\fl\proj_dev\CADD\Std-Det\Std-Det\st6330l_detail.dgn

REG	STATE	PROJECT	SHEET NO.
SE	FL	FWS-FLP 10(1)	S8

GENERAL NOTES:

1. All signs shall be post mounted when work operations exceed one day except as noted in the standards.

TEMPORARY SIGN SUPPORT NOTE:

1. Signs mounted on temporary supports or barricades, and barricade/sign combination shall be crashworthy in accordance with NCHRP 350 requirements.

POST MOUNTED SIGN NOTES:

1. Provide 3 lb/ft Steel U Channel Posts with a minimum section modulus of 0.43 in^2 for 60 ksi steel, or a minimum section modulus of 0.37 in^2 for 70 ksi steel.
2. Provide 4 lb/ft Steel U Channel Posts with a minimum section modulus of 0.56 in^2 for 60 ksi steel, or a minimum section modulus of 0.47 in^2 for 70 ksi steel.
3. Steel U Channel Posts shall meet the material requirements of Specification 700 with the exception that galvanization is not required.
4. Sign attachment bolts, washers, nuts and spacers shall conform with ASTM A307 or A 36.
5. For diamond warning signs with supplement plaque (up to 3 ft^2 in area), use 4 lb/ft posts for up to 10 ft Clear Height (measure to the bottom of diamond warning sign).
6. Install 4 lb/ft Steel U Channel Posts with approved breakaway splice in accordance with the manufacturer's detail shown on the QPL.
7. The contractor may install 3 lb/ft Steel U Channel Posts with approved breakaway splice in accordance with the manufacturer's detail shown on the QPL.
8. Install all posts plumb.
9. . The contractor shall set the posts in preformed holes to the specified depth with suitable backfill tamped securely on all sides, or filled with flowable fill or bagged concrete. The cost of the flowable fill or bagged concrete shall be included in the cost of sign. At the contractor's option, 3 lb/ft sign post and any base post may be driven (See Typical Foundation Detail).

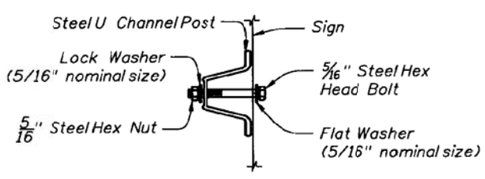

SIGN ATTACHMENT DETAIL

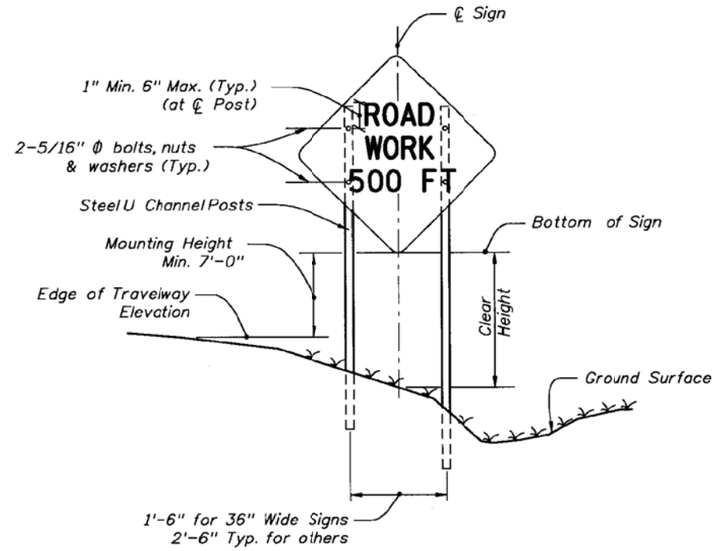

2 POST SIGN SUPPORT MOUNTING DETAILS

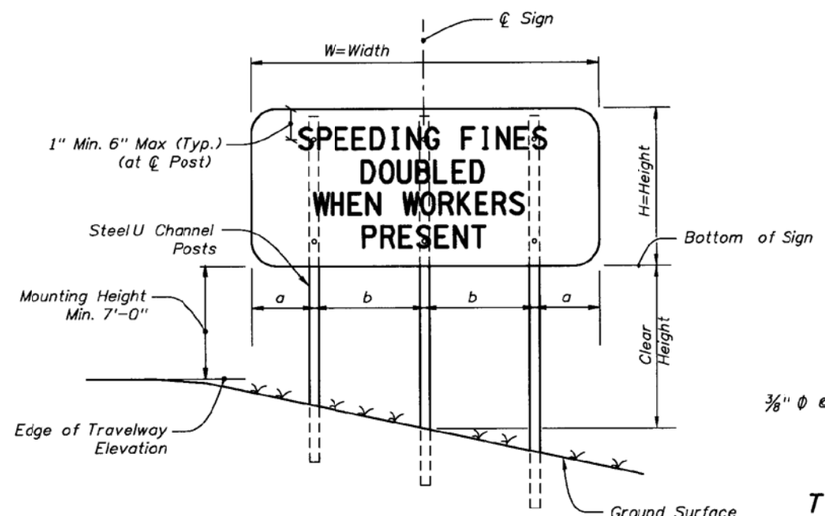

3 POST SIGN SUPPORT MOUNTING DETAILS

Where W = 48": a = 7" and b = 1'-5"
W = 72": a = 10½" and b = 2'-1½"

POST AND FOUNDATION TABLE FOR WORK ZONE SIGNS

SIGN SHAPE	SIGN SIZE (inches)	NUMBER OF STEEL U CHANNEL POSTS
Octagon	30X30	1
Triangle	36X36X36	1
	48X48X48	1
	60X60X60	2
Rectangle (W X H)	24X18	1
	24X30	1
	30X24	1
	36X18	1
	48X18	1
	36X48	2
	48X30	2
	48X36	2
	54X36	2
	48X60	3
	72X48	3
Square	30X30	1
	36X36	2
	48X48	2
Diamond (See Note 6)	48X48	2
Circle	36Φ	2

Notes For Table:

1. Use 3 lb/ft posts for Clear Height up to 10' and 4 lb/ft posts for Clear Height up to 12'.
2. Minimum foundation depth is 4.5 feet for 3 lb/ft posts and 5 feet for 4 lb/ft posts.

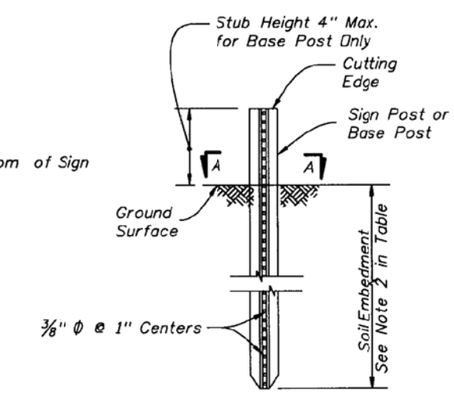

TYPICAL FOUNDATION DETAIL

See QPL for post, splice and connection details.
No bolts installed closer than 1" to cutting edge.

SECTION A-A
(SCHEMATIC)

WORK ZONE SIGN SUPPORTS

NO SCALE

U.S. DEPARTMENT OF TRANSPORTATION
FEDERAL HIGHWAY ADMINISTRATION
EASTERN FEDERAL LANDS HIGHWAY DIVISION
STERLING, VIRGINIA

CONSTRUCTION TRAFFIC CONTROL SIGN MOUNTING

DETAIL
635-A

4/30/2008 1:42:17 PM M:\Projects\refuge\FLP\FLP01\proj_dev\CADD\Std-Det\Std-Det\sf635-Adgn