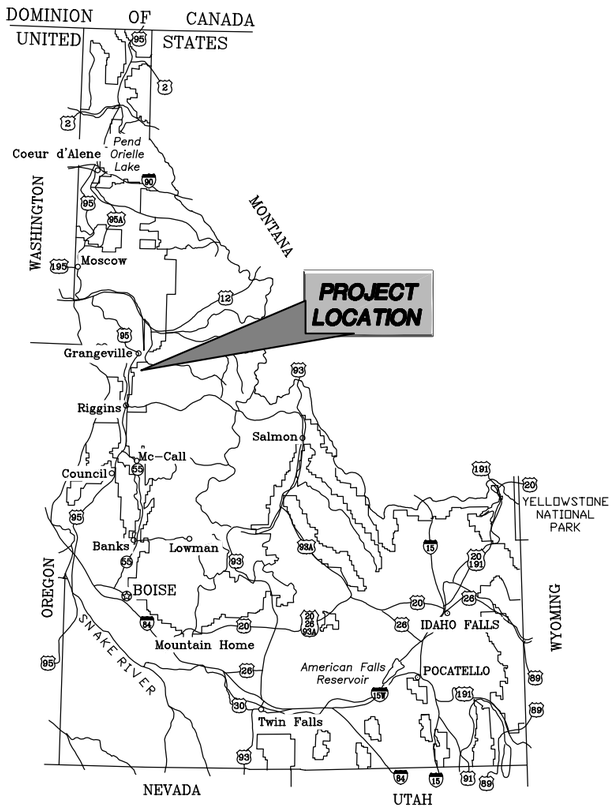

KEY MAP OF IDAHO

CONTRACTOR FURNISHED MATERIAL:

RIPRAP
COARSE GRANULAR BACKFILL

GOVERNMENT SUPPLIED MATERIAL SOURCE SITE INCLUDES:

AGGREGATE SURFACING (SHOWN)
UNCLASSIFIED BORROW (ON-SITE)

U.S. DEPARTMENT OF AGRICULTURE
FOREST SERVICE
CONSTRUCTION PLANS

FOR

BRIDGE REPLACEMENT

SOUTH FORK WHITE BIRD CREEK
BRIDGE NO. 642-5.0

T 28 N., R 3 E., SECTION 15

NEZ PERCE NATIONAL FOREST
SALMON RIVER RANGER DISTRICT
IDAHO COUNTY, IDAHO

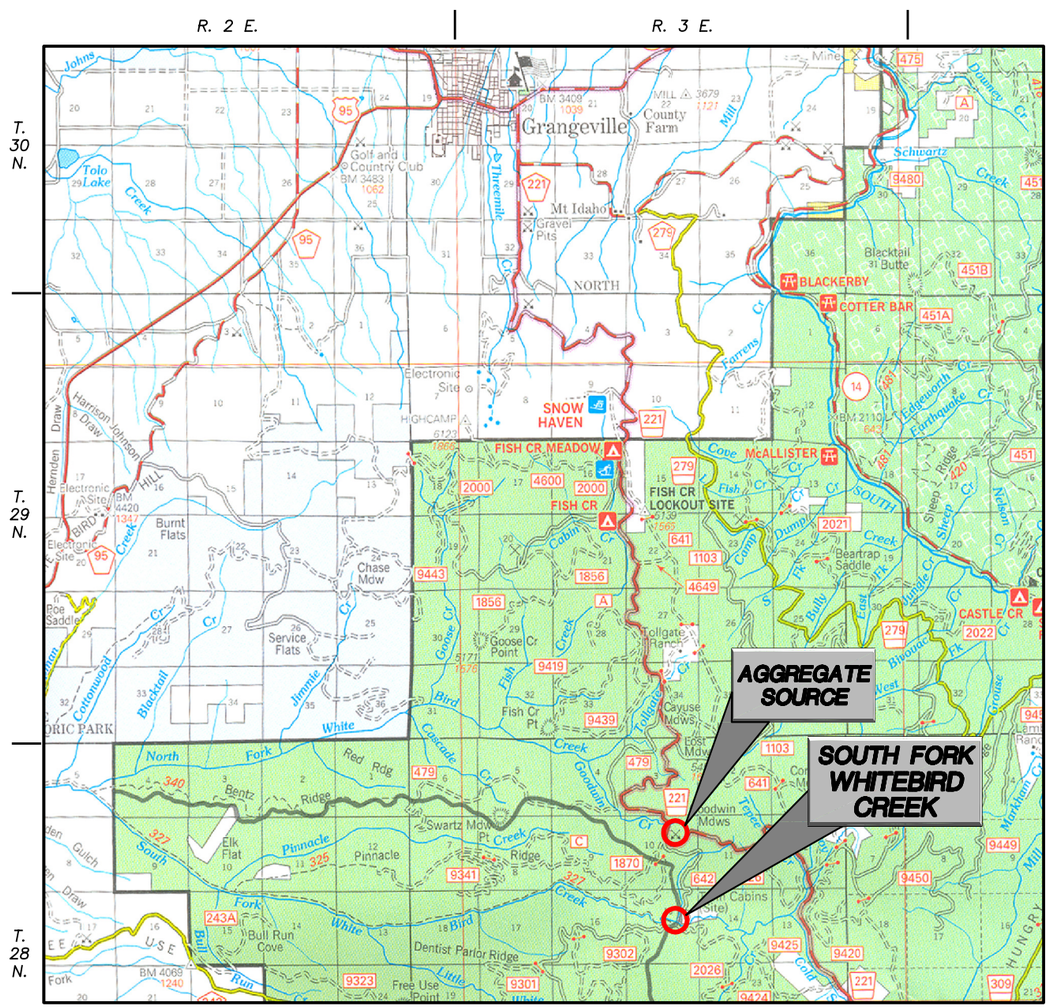

LOCATION MAP SCALE: 1/2" = 1 Mile

INDEX TO SHEETS	
NO.	DESCRIPTION
1	COVER SHEET
2	SUMMARY OF QUANTITIES, GENERAL NOTES
3	ROAD PLAN & PROFILE
4	APPROACH ROAD DETAILS
5	BRIDGE GENERAL LAYOUT
6	FOUNDATION PLAN
7–9	ABUTMENT DETAILS
10	SUPERSTRUCTURE PLAN
11	SUPERSTRUCTURE DETAILS
XS1–XS2	ROADWAY CROSS SECTIONS

APPROVED:

_____ DATE _____

REGIONAL ENGINEER
NORTHERN REGION

REVIEWED:

_____ DATE _____

DISTRICT RANGER
SALMON RIVER RANGER DISTRICT
NEZ PERCE NATIONAL FOREST

RECOMMENDED:

_____ DATE _____

FOREST ENGINEER
NEZ PERCE NATIONAL FOREST

APPROVED:

_____ DATE _____

FOREST SUPERVISOR
NEZ PERCE NATIONAL FOREST

DJ&A, P.C.
CONSULTING ENGINEERS & LAND SURVEYORS
3203 Russell Street, Missoula, Montana 59801-8591
Phone 406/721-4320 Fax 406/549-6371

DRAWING NO. R2013

SUMMARY OF ESTIMATED QUANTITIES

ITEM NO.	ITEM DESCRIPTION	MEASUREMENT		WHITE BIRD CREEK BRIDGE NO. 642-5.0
		METHOD	UNIT	
15101	MOBILIZATION	LSQ	Lump Sum	1
15221	CONSTRUCTION SURVEY AND STAKING	LSQ	Lump Sum	1
20102	CLEARING AND GRUBBING	LSQ	Lump Sum	1
20304	REMOVAL OF EXISTING TIMBER BRIDGE	LSQ	Lump Sum	1
20404	UNCLASSIFIED BORROW	DQ	Cubic Yard	260
20801	STRUCTURE EXCAVATION	LSQ	Lump Sum	1
25101	PLACED RIPRAP, CLASS 5 MACHINE PLACED (COMMERCIAL SOURCE)	DQ	Cubic Yard	80
27250	GEOCELL ABUTMENT STABILIZATION, 6" DEPTH	DQ	Square Yard	33
30809	CRUSHED AGGREGATE, COMPACTION METHOD 1 (GOVERNMENT SOURCE)	DQ	Cubic Yard	100
55301	PRECAST, PRESTRESSED CONCRETE STRUCTURAL MEMBER, TRI-DECK BEAMS	AQ	Each	4
553A01A	PRECAST CONCRETE MEMBER, GRADE BEAM	AQ	Each	2
553A01B	PRECAST CONCRETE MEMBER, WINGWALL	AQ	Each	4
60202	24" SPAN, 18" RISE CORRUGATED STEEL PIPE-ARCH, 0.138" THICKNESS	AQ	Lineal Foot	24
62201	EQUIPMENT RENTAL, HYDRAULIC EXCAVATOR WITH THUMB	AQ	Hour	8
62202	EQUIPMENT RENTAL, LARGE DUMP TRUCK	AQ	Hour	8
62503	SEEDING, DRY METHOD (WITH MULCHING)	LSQ	Lump Sum	1
63305	WOOD POSTS	AQ	Lineal Foot	36
63306	OBJECT MARKERS	AQ	Each	4

DQ = Design Quantity; AQ= Actual Quantity

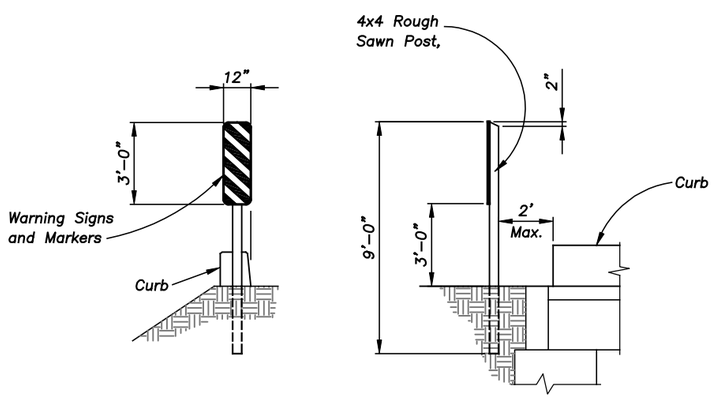

OBJECT MARKERS: Use 12"x 36" Type 3 object markers colored yellow and black. Use material meeting MUTCD OM-3L or OM-3R specifications. Fasten to post w/ (2) 1/4" ø machine bolts w/ washers. Field drill bolt holes. Install posts such that the inside edge of the reflectorized panel is on line with the inside edge of the curb.

OBJECT MARKER TYPE 3 TYPICAL INSTALLATION

Not to Scale

GENERAL NOTES:

SPECIFICATIONS: Construct the project in compliance with Federal Highway Administration Standard Specifications for Construction of Road and Bridges on Federal Highway Projects (FP-03) and applicable Special Project Specifications.

CONCRETE: Use Class A(AE) for all Precast concrete, F'c = 5000 psi at 28 days with an entrained air content of 5% ± 1%. Finish all precast (non-prestressed) elements with a Class 2- Rubbed Finish.

Use Class "P" Prestressed concrete with a minimum 28 day compressive strength of 6000 psi (F'c = 6000 psi), except as noted below. As a minimum, concrete strength at transfer of prestress force shall be 4000 psi (F'ci = 4000 psi). Use Class P(AE) concrete in the top two inches of the prestressed beams with an entrained air content of 5% ±1%.

Make all concrete in accordance with an approved mix design. Chamfer all exposed edges of concrete and fillet all re-entrant angles 3/4" unless otherwise noted.

REINFORCING STEEL: Use non-prestressed reinforcing of the deformed type conforming to AASHTO M31 (ASTM A615), Grade 60. Concrete cover shall be as shown; where not shown it shall conform to AASHTO. Cut and bend steel in accordance with ACI 315.

PRESTRESSING STEEL: Use prestressing steel of 1/2" diameter, seven wire low-relaxation prestressing strand conforming to AASHTO M203, Grade 270.

Use a maximum jacking force for prestressing strand reinforcement of 0.85 f's or 35.14 kips. Maximum strand stress at transfer shall be 0.75 f's or 31.00 kips.

HARDWARE AND STRUCTURAL STEEL: Use steel shapes, plates and bars meeting the requirements of AASHTO M183 (ASTM A36). Galvanize all steel in accordance with AASHTO M111 (ASTM A123) except when covered by 1 inch or more of concrete. Use hardware meeting the requirements of ASTM A307 except as noted. Galvanize hardware in accordance with AASHTO M232 (ASTM A153) unless covered by 1 inch or more of concrete.

Weld in accordance with the Bridge Welding Code, AWS D1.5.

EROSION CONTROL PLAN: Submit a soil erosion plan per Section 157 to the Contracting Officer and have it approved prior to beginning any work. Provide methods to minimize disturbance to the streambed and to prevent runoff from the construction site from entering directly into the stream. Construct temporary means to divert the flow of the live stream as necessary to perform work. Do not pump water from excavations directly into the live stream.

DISPOSAL: All materials designated for removal become the property of the Contractor and are to be disposed of by removing from site in an environmentally safe manner in accordance with all Local, State and Federal requirements.

TEMPORARY TRAFFIC CONTROL: Submit a Temporary Traffic Control Plan to the Contracting Officer for review prior to construction.

STREAM CROSSINGS: During the work the Contractor will be allowed to cross the stream with a piece of equipment a maximum of four (4) times.

BRIDGE DESIGN: This structure is designed for HS 20-44 loading in accordance with AASHTO Standard Specifications for Highway Bridges, 17th edition, 2002.

HYROLOGY/HYDRAULICS: The bridge is designed to pass a 100-year frequency flood with 2' minimum freeboard. Flows and depths are as follows:

Q100 = 400 cfs Depth = 3.9'
Q2 = 99 cfs Depth = 1.8'

D&A, P.C.
CONSULTING ENGINEERS & LAND SURVEYORS
3203 Russell Street, Missoula, Montana 59801-6691
Phone 406/721-4320 Fax 406/549-6371

FOREST SERVICE U S DEPARTMENT OF AGRICULTURE
REGION ONE

Sec. 15 T. 28 N R. 3 E
Length 51' Width 22'
Loading HS-20 Forest NEZ PERCE

DRAWING DATE: OCT 07
△ Revised Date
△ Revised Date

WHITE BIRD CREEK BRIDGE SUMMARY OF QUANTITIES AND GENERAL NOTES

Designed CT Design Checked MJ
Drawn CT Drawing Checked MJ

DRAWING NO. R2013
SHEET 2 OF 11

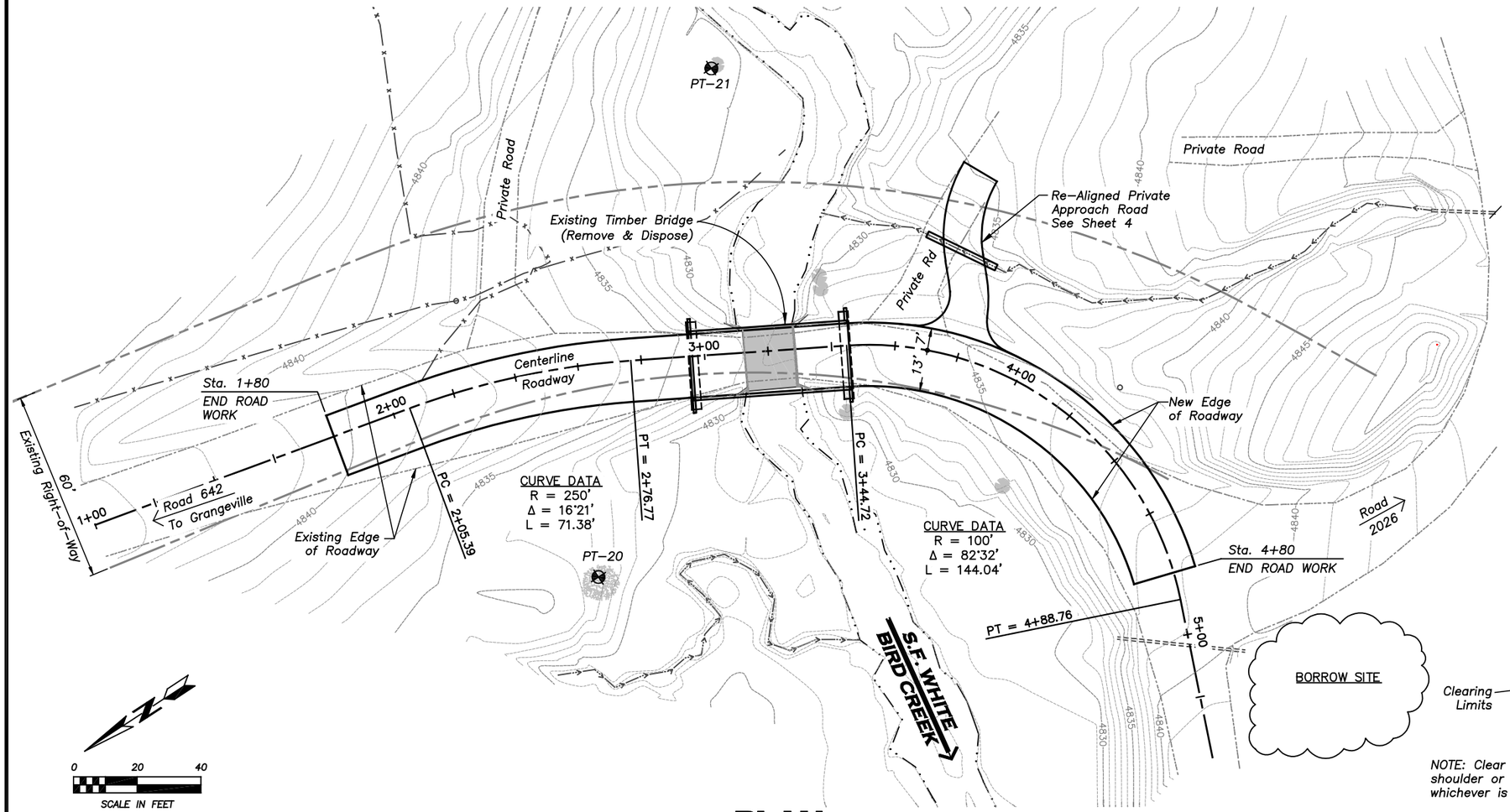

PLAN

SURVEY CONTROL COORDINATES

Number	Northing	Easting	Elevation	Description
20	2026.6388	1954.7231	4833.35	BM–LPP
21	1906.4360	2070.7690	4830.83	BM–LPP

CENTERLINE COORDINATE TABLE

Number	Northing	Easting	Elevation	Description
1000	2071.14	802039.25	554840.75	Sta. 1+80
1001	2051.65	862034.76	484839.65	Sta. 2+00
1002	2032.27	322029.86	024838.57	Sta. 2+20
1003	2013.32	462023.47	764837.74	Sta. 2+40
1004	1994.94	672015.60	114837.23	Sta. 2+60
1005	1977.24	672006.29	934837.04	Sta. 2+80
1006	1962.94	091998.25	994837.10	Sta. 2+96.41 C/L Brg. A1
1007	1921.09	571974.74	444837.10	Sta. 3+44.41 C/L Brg. A2
1008	1908.12	771966.11	964837.02	Sta. 3+60
1009	1893.72	171952.29	444836.99	Sta. 3+80
1010	1882.34	951935.88	274837.14	Sta. 4+00
1011	1874.46	451917.53	894837.46	Sta. 4+20
1012	1870.38	101897.99	434837.93	Sta. 4+40
1013	1870.26	181878.02	804838.42	Sta. 4+60
1014	1874.11	171858.43	604838.92	Sta. 4+80

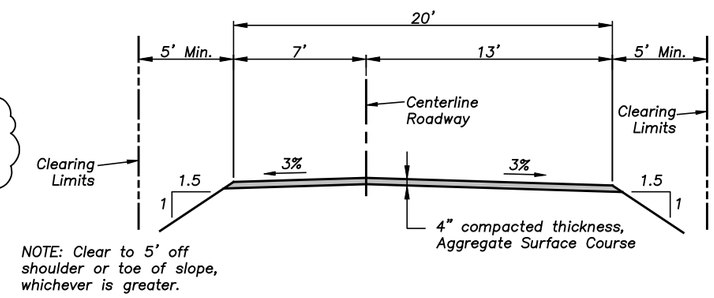

TYPICAL SECTION

No Scale

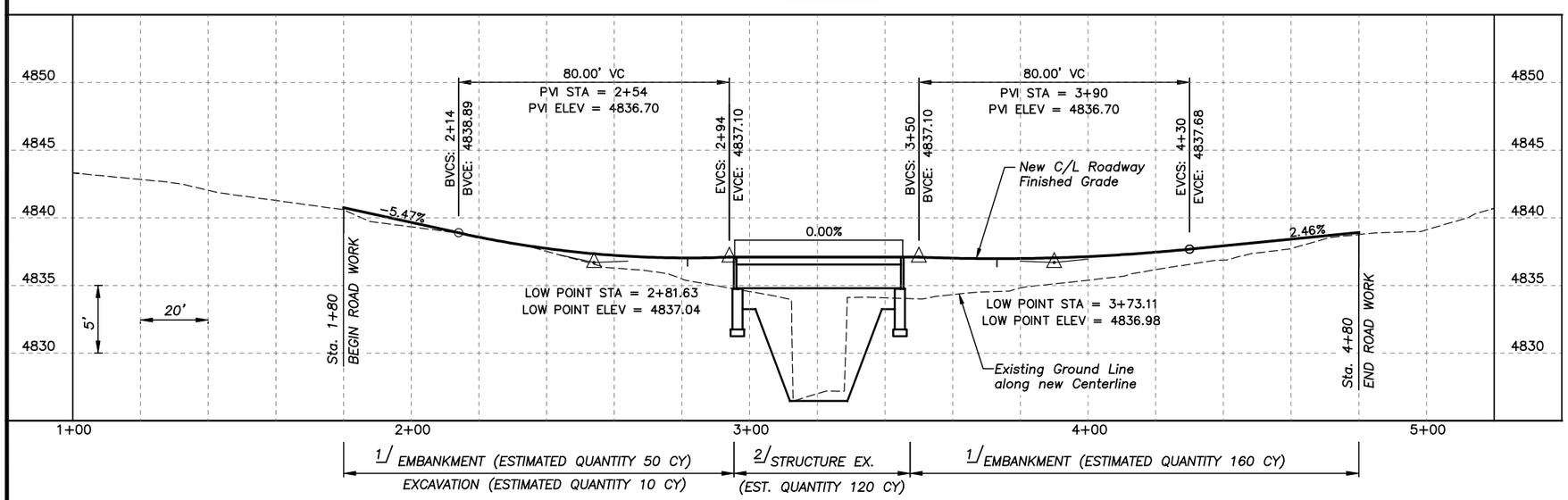

1/ QUANTITIES SHOWN ARE TO SUBGRADE AND ARE UNADJUSTED FOR SHRINK/SWELL.

2/ STRUCTURE EXCAVATION QUANTITY PROVIDED FOR INFORMATION ONLY. SUITABLE MATERIAL PRESERVED FROM STRUCTURE EXCAVATION MAY BE USED AS BORROW FOR ROADWAY EMBANKMENT.

D&A, P.C.
CONSULTING ENGINEERS & LAND SURVEYORS
3203 Russell Street, Missoula, Montana 59801-5591
Phone 406/721-4320 Fax 406/549-8371

FOREST SERVICE
U S
DEPARTMENT OF AGRICULTURE
REGION ONE

Sec. 15 T. 28 N R. 3 E
Length 51' Width 22'
Loading HS–20 Forest NEZ PERCE

DRAWING DATE: DEC 07
△ Revised _____ Date _____
△ Revised _____ Date _____

WHITE BIRD CREEK BRIDGE ROAD PLAN & PROFILE

Designed CT Design Checked MJ
Drawn CT Drawing Checked MJ

DRAWING NO. R2013
SHEET 3 OF 11

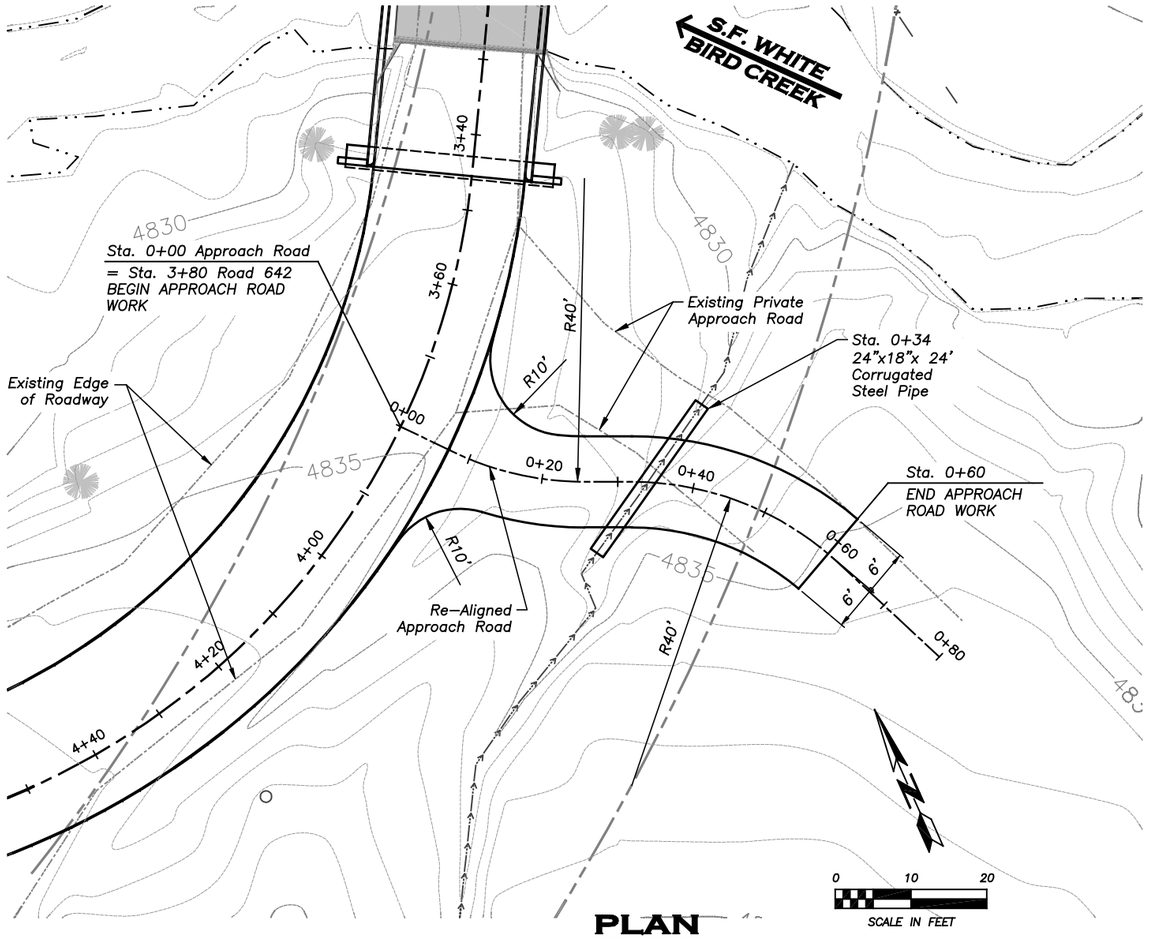

PLAN

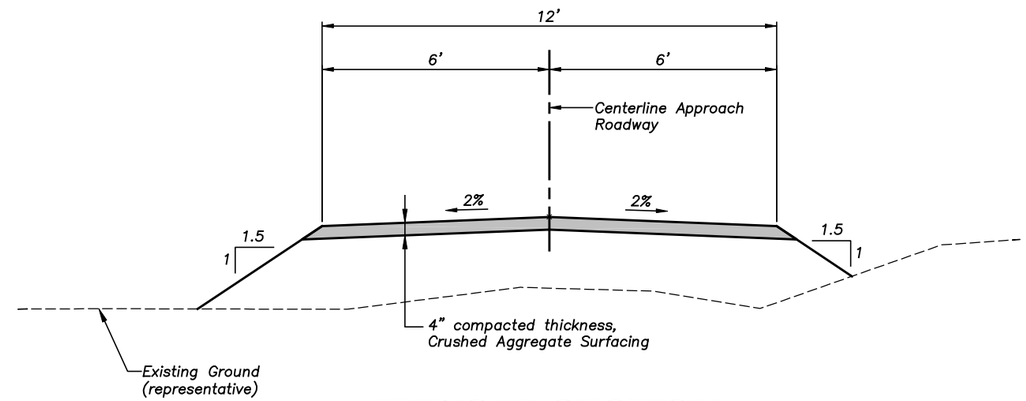

TYPICAL SECTION

Scale: 1/4" = 1'

CENTERLINE COORDINATE TABLE

Number	Northing	Easting	Elevation	Description
1015	1893.7217	1952.2944	4836.99	Sta. 0+00
1016	1886.1586	1958.8348	4836.53	Sta. 0+10
1017	1879.8834	1966.5874	4835.66	Sta. 0+20
1018	1875.4971	1975.5622	4834.80	Sta. 0+30
1019	1870.7304	1984.3282	4834.27	Sta. 0+40
1020	1863.9778	1991.6686	4834.51	Sta. 0+50
1021	1855.6191	1997.1103	4835.18	Sta. 0+60

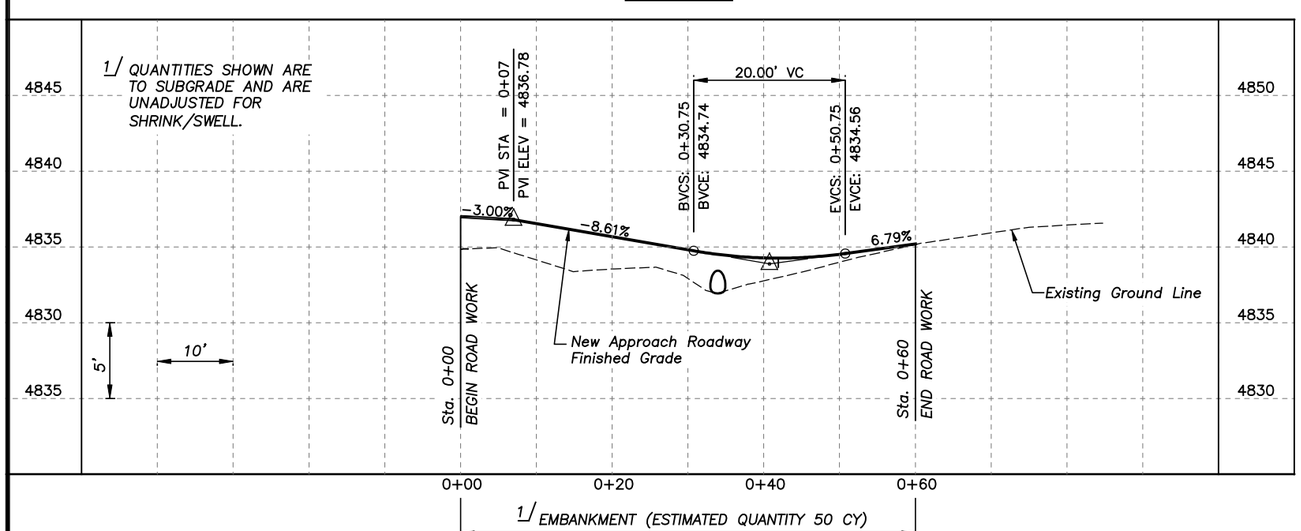

D&A, P.C.
CONSULTING ENGINEERS & LAND SURVEYORS
3203 Russell Street, Missoula, Montana 59801-8591
Phone 406/721-4320 Fax 406/549-8371

FOREST SERVICE U S DEPARTMENT OF AGRICULTURE
REGION ONE

Sec. 15 T. 28 N R. 3 E
Length 51' Width 22'
Loading HS-20 Forest NEZ PERCE

DRAWING DATE: DEC 07
△ Revised _____ Date _____
△ Revised _____ Date _____

WHITE BIRD CREEK BRIDGE APPROACH ROAD DETAILS

Designed CT Design Checked MJ
Drawn CT Drawing Checked MJ

DRAWING NO. R2013
SHEET 4 OF 11

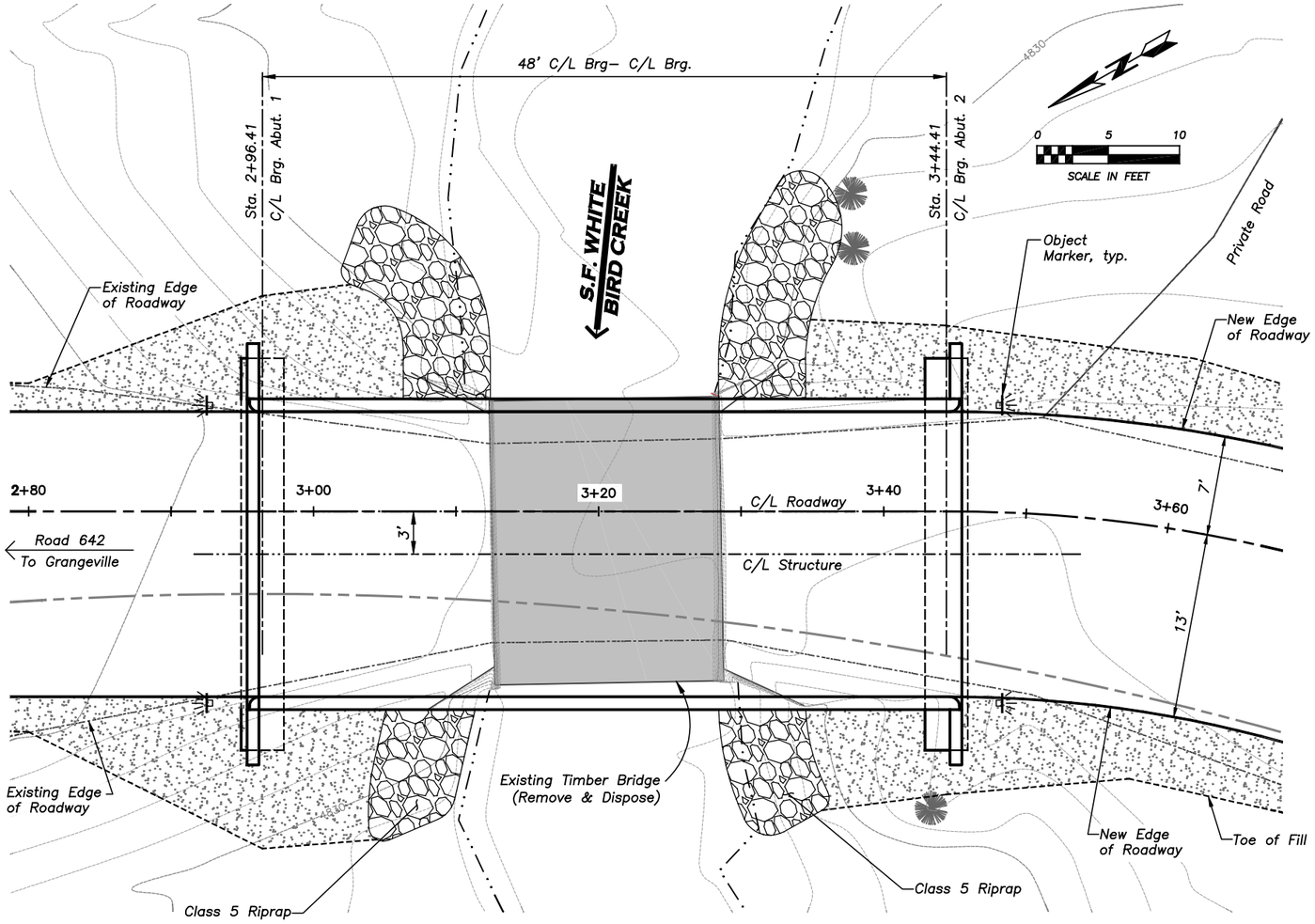

PLAN

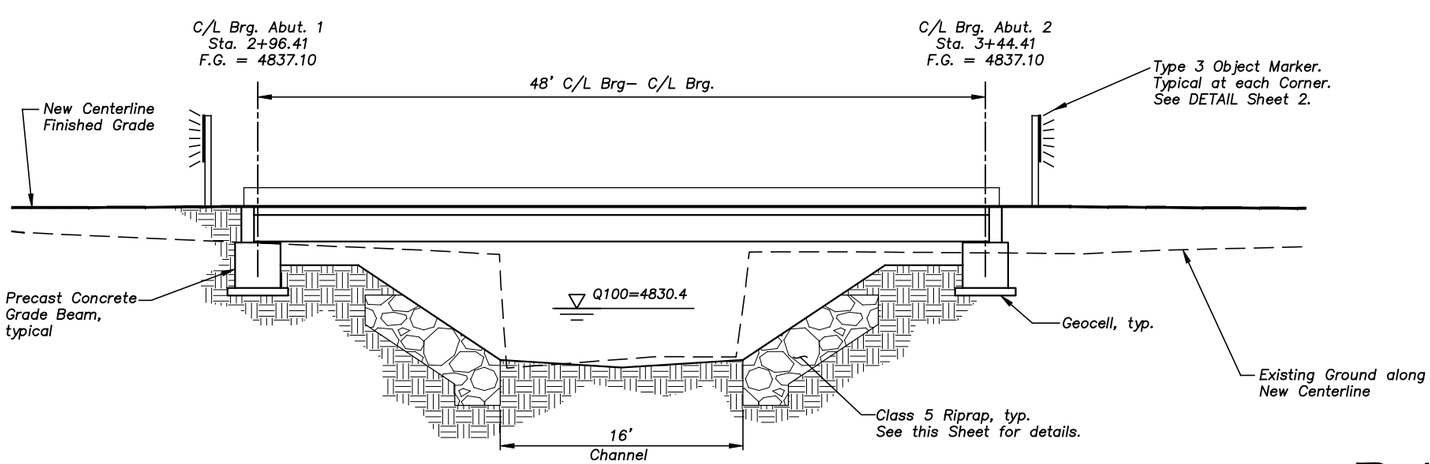

ELEVATION

Scale: 1" = 10'–0"

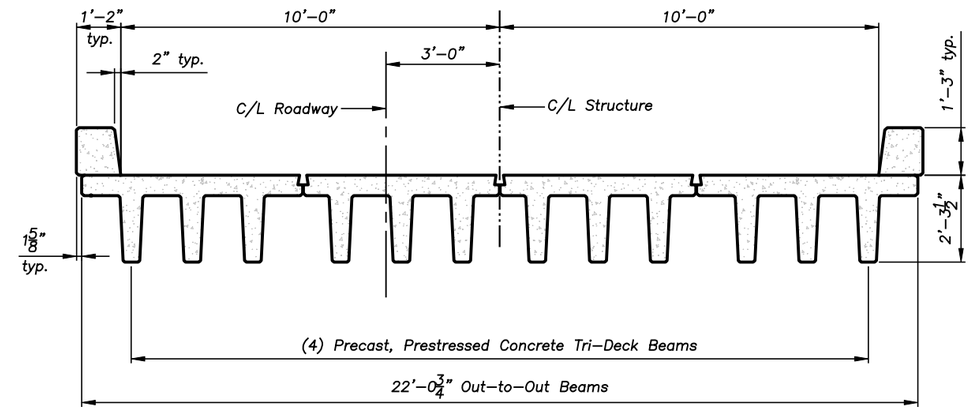

TYPICAL SECTION

Scale: 1/4" = 1'

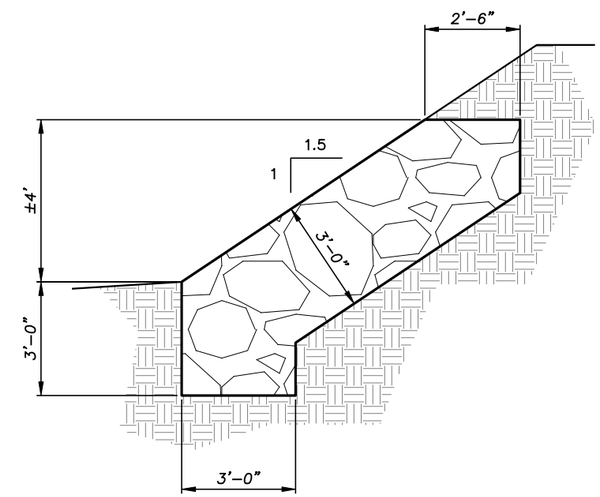

RIPRAP SECTION

Scale: 1/4" = 1'

DJ&A, P.C.
CONSULTING ENGINEERS & LAND SURVEYORS
3203 Russell Street, Missoula, Montana 59801-8091
Phone 406/721-4320 Fax 406/549-9371

FOREST SERVICE U S DEPARTMENT OF AGRICULTURE
REGION ONE

Sec. 15 T. 28 N R. 3 E	DRAWING DATE: DEC 07
Length 51' Width 22'	△ Revised Date
Loading HS–20 Forest NEZ PERCE	△ Revised Date

WHITE BIRD CREEK BRIDGE
BRIDGE GENERAL LAYOUT

Designed CT Design Checked MJ	DRAWING NO. R2013
Drawn CT Drawing Checked MJ	SHEET 5 OF 11

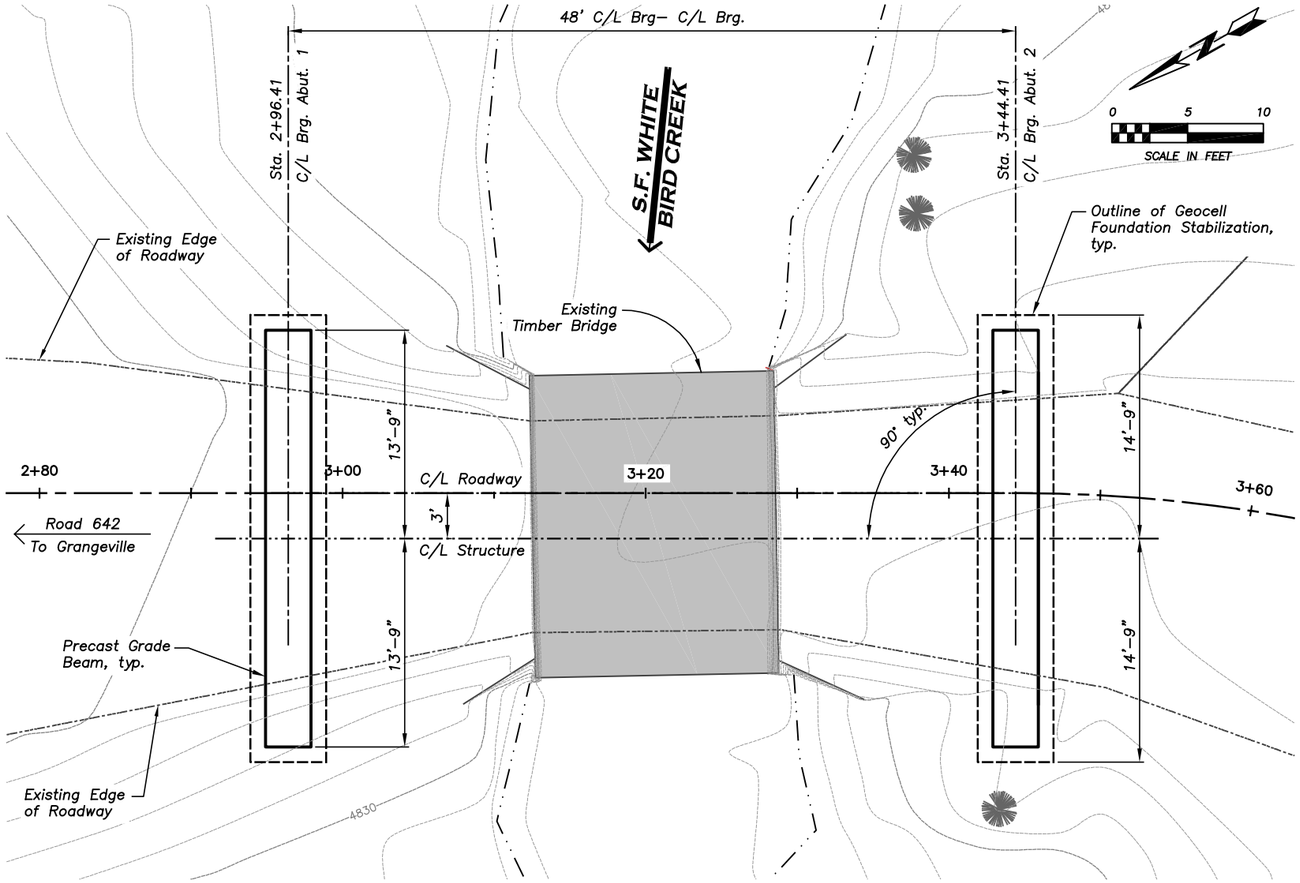

PLAN

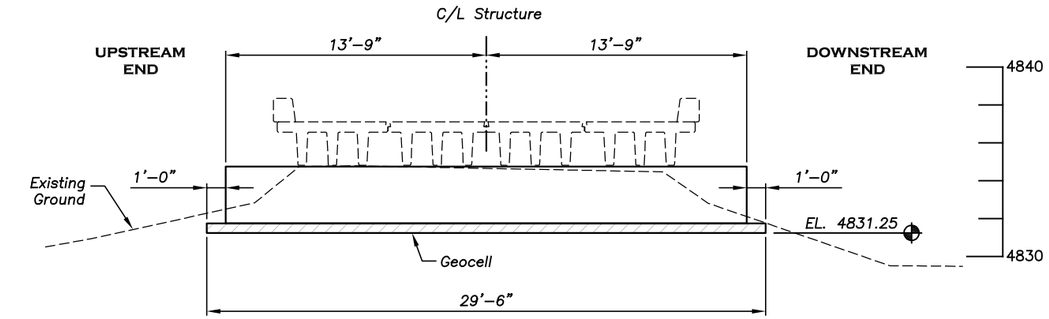

SECTION ALONG C/L BEARING - ABUT. 1 *(Looking Ahead On–Line)*

Scale: 1/8" = 1'

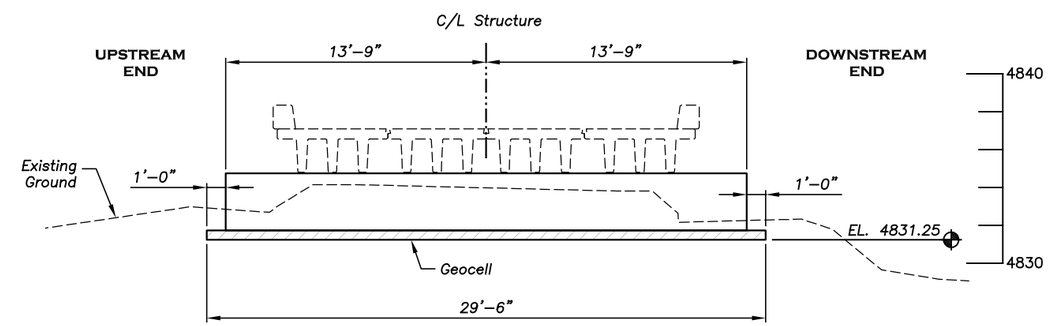

SECTION ALONG C/L BEARING - ABUT. 2 *(Looking Ahead On–Line)*

Scale: 1/8" = 1'

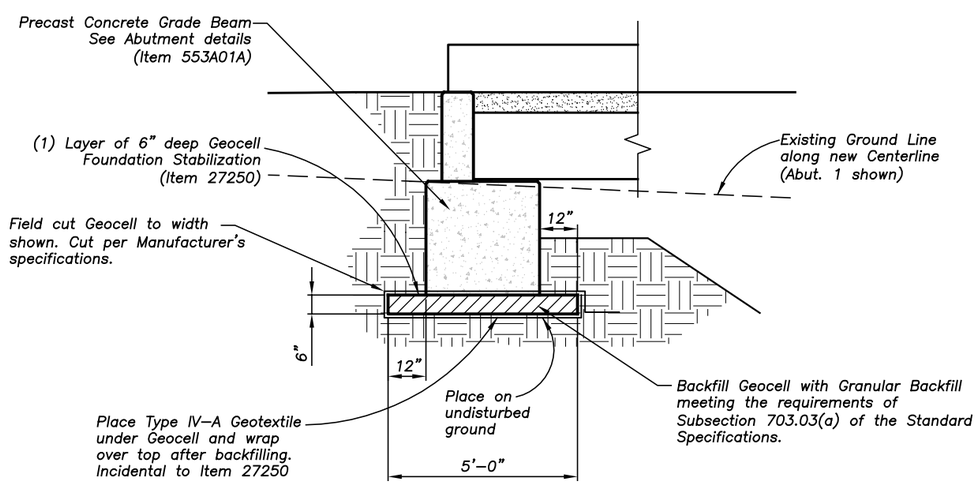

TYPICAL SECTION

Scale: 1/4" = 1'

DJ&A, P.C.
CONSULTING ENGINEERS & LAND SURVEYORS
3203 Russell Street, Missoula, Montana 59801-8591
Phone 406/721-4320 Fax 406/549-6371

FOREST SERVICE U.S. DEPARTMENT OF AGRICULTURE
REGION ONE

Sec. 15 T. 28 N R. 3 E	DRAWING DATE: DEC 07
Length 51' Width 22'	△ Revised Date
Loading HS–20 Forest NEZ PERCE	△ Revised Date

WHITE BIRD CREEK BRIDGE FOUNDATION PLAN

Designed CT Design Checked MJ	DRAWING NO. R2013
Drawn CT Drawing Checked MJ	SHEET 6 OF 11

F:\5279\dwg\White Bird Gen Plan.dwg, Found Plan, 4/1/2008 9:22:28 AM, curtis

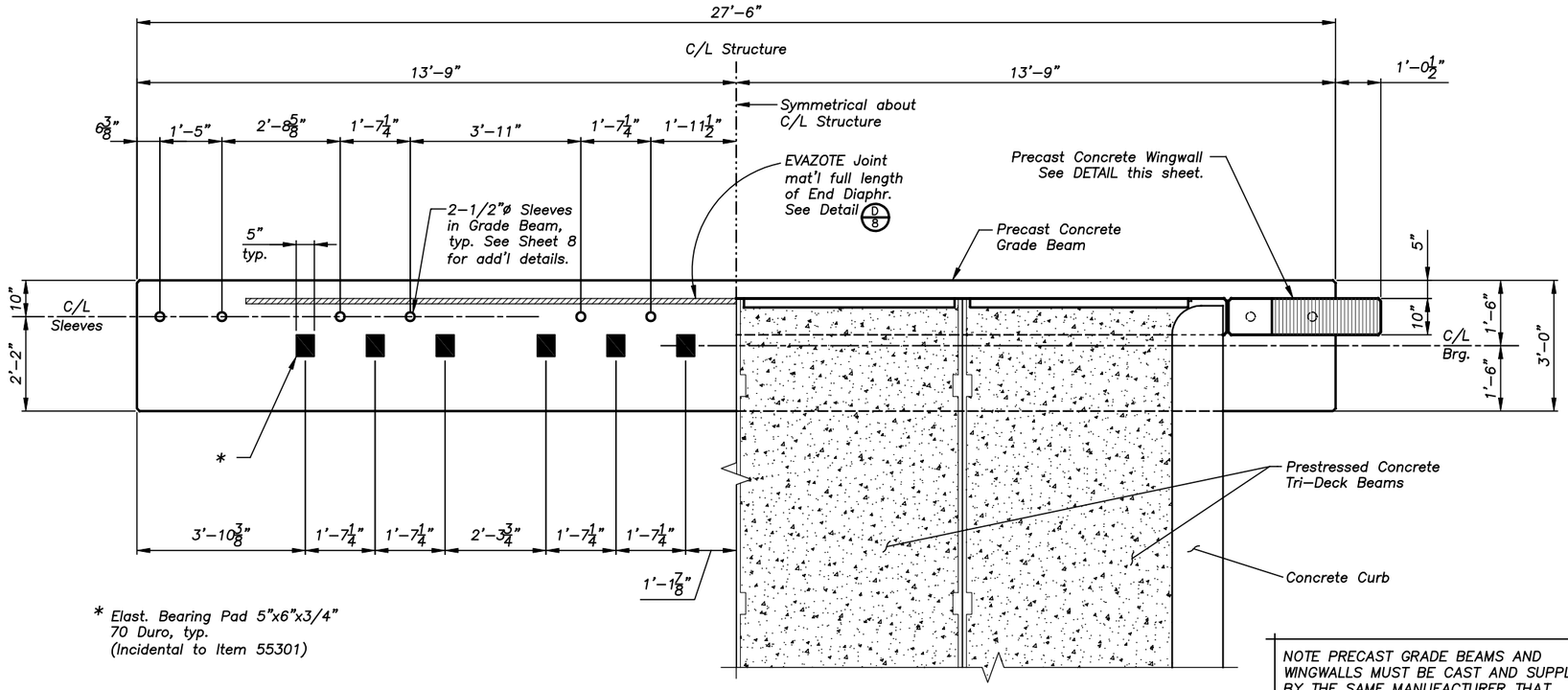

* Elast. Bearing Pad 5"x6"x3/4" 70 Duro, typ. (Incidental to Item 55301)

PLAN

Abut. No. 1 Shown, Abut. No. 2 Similar

Scale: 1/4" = 1'

NOTE PRECAST GRADE BEAMS AND WINGWALLS MUST BE CAST AND SUPPLIED BY THE SAME MANUFACTURER THAT FABRICATES THE PRESTRESSED TRIDECK BEAMS.

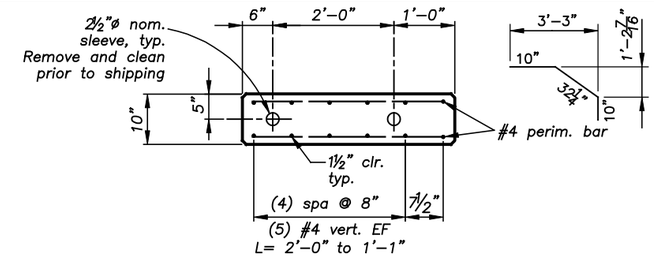

SECTION B-B

Not to Scale

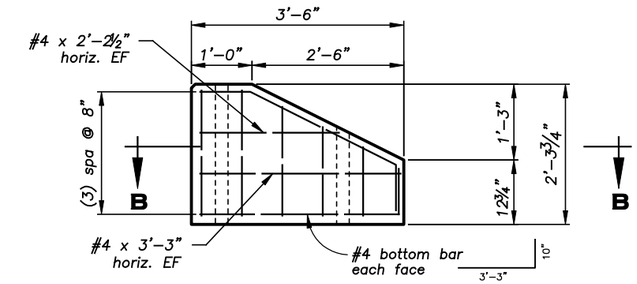

WINGWALL DETAIL

Not to Scale

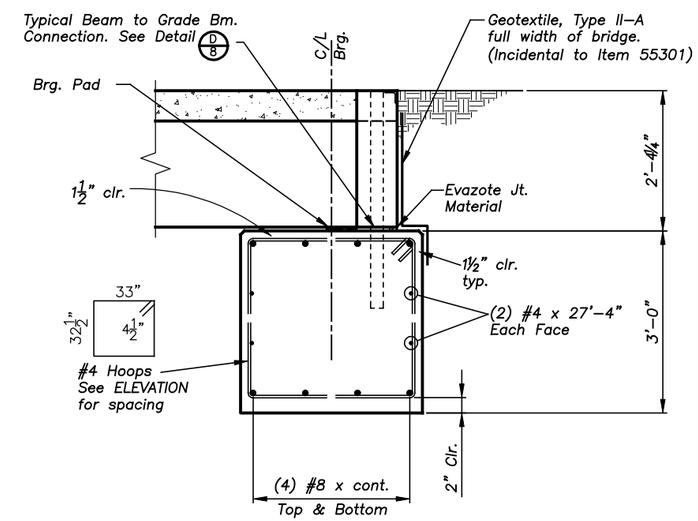

SECTION A-A

Not to Scale

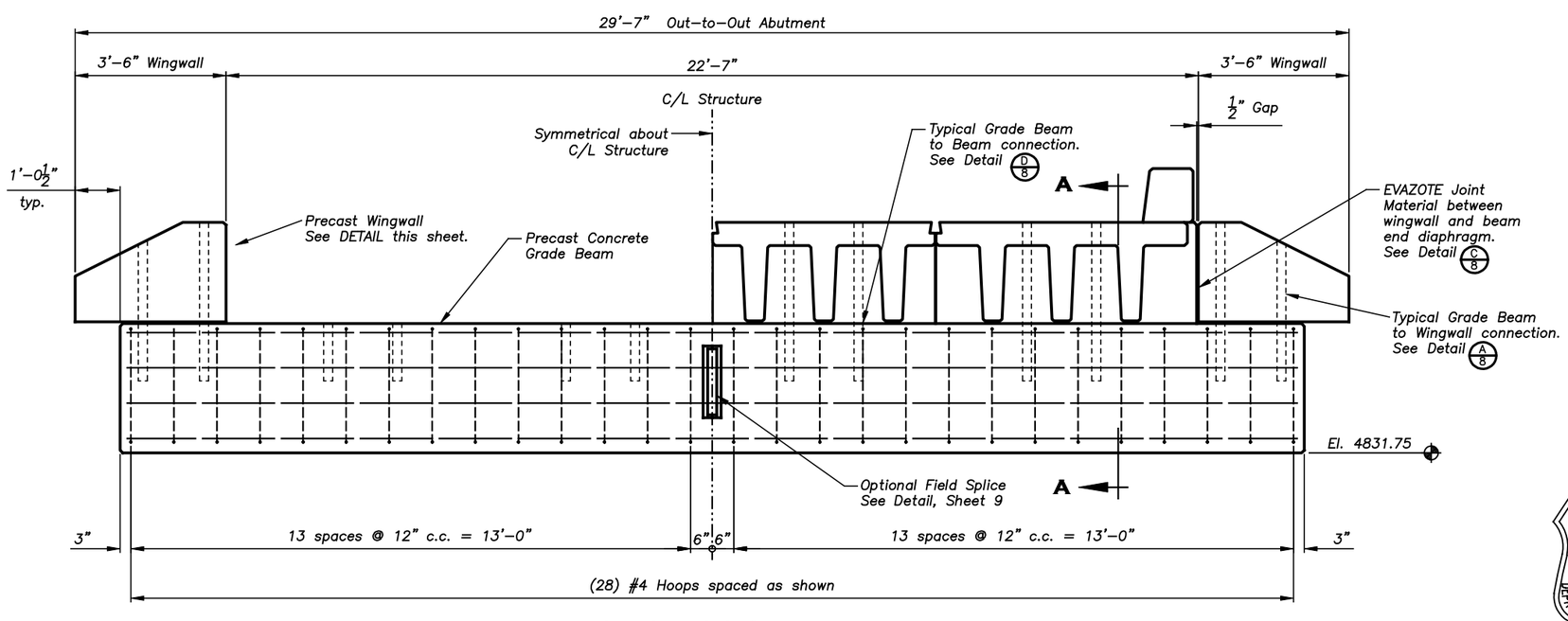

ELEVATION

LOOKING BACK ON–LINE

Scale: 1/4" = 1'

Abut. No. 1 Shown, Abut. No. 2 Similar

REGION ONE

Sec. 15 T. 28 N R. 3 E Length 51' Width 22' Loading HS–20 Forest NEZ PERCE	DRAWING DATE: DEC 07 △ Revised _____ Date _____ △ Revised _____ Date _____

WHITE BIRD CREEK BRIDGE ABUTMENT PLAN & ELEVATION

Designed CT Design Checked MJ Drawn CT Drawing Checked MJ	DRAWING NO. R2013 SHEET 7 OF 11

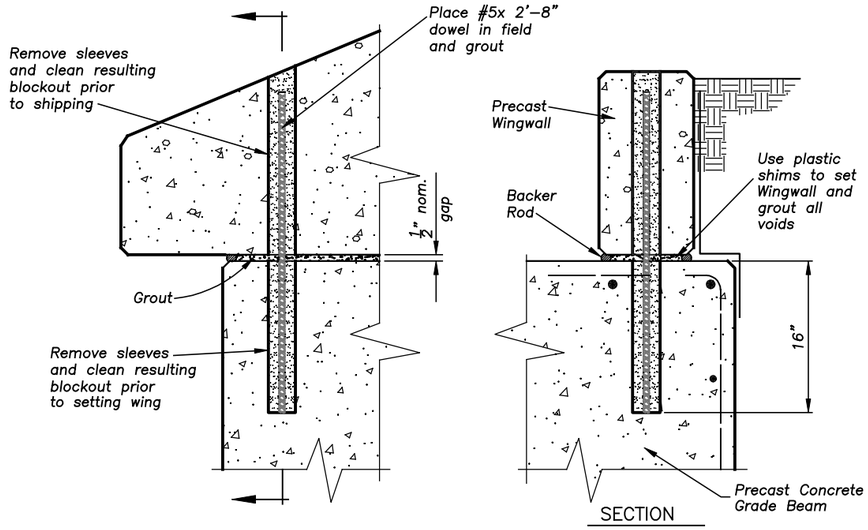

A/8 DETAIL
Scale: 3/4" = 1'–0

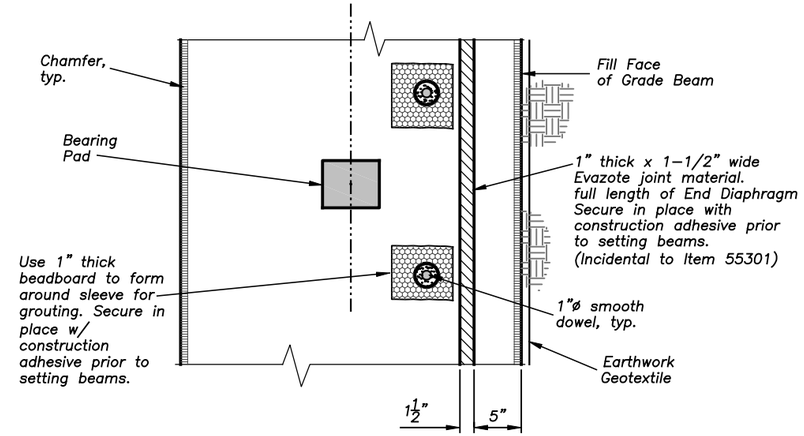

PLAN SECTION A–A

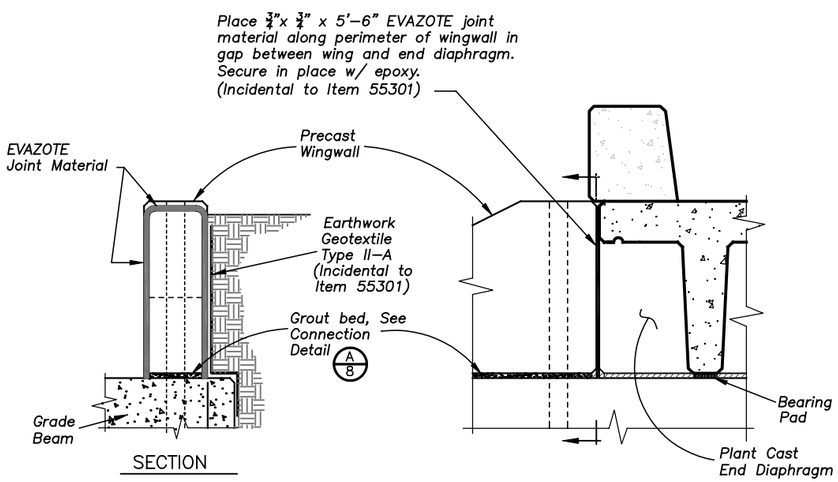

C/8 DETAIL
Scale: 3/4" = 1'–0

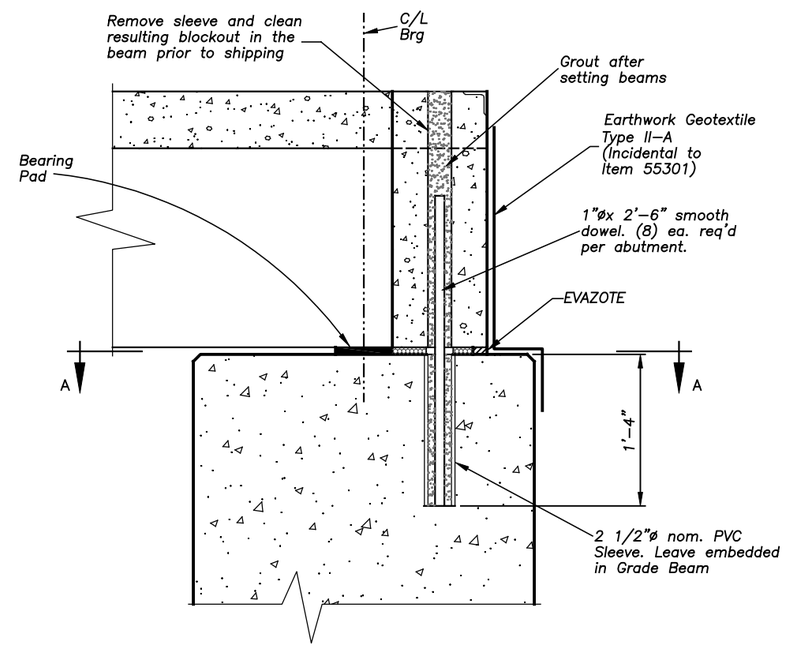

D/8 DETAIL
Scale: 3/4" = 1'–0"

Sec. 15 T. 28 N R. 3 E	DRAWING DATE: DEC 07
Length 51' Width 22'	△ Revised Date
Loading HS–20 Forest NEZ PERCE	△ Revised Date

WHITE BIRD CREEK BRIDGE ABUTMENT DETAILS

D&A, P.C.
CONSULTING ENGINEERS & LAND SURVEYORS
3203 Russell Street, Missoula, Montana 59801-5591
Phone 406/721-4320 Fax:406/549-9371

FOREST SERVICE U S DEPARTMENT OF AGRICULTURE
REGION ONE

Designed CT Design Checked MJ	DRAWING NO. R2013
Drawn CT Drawing Checked MJ	SHEET 8 OF 11

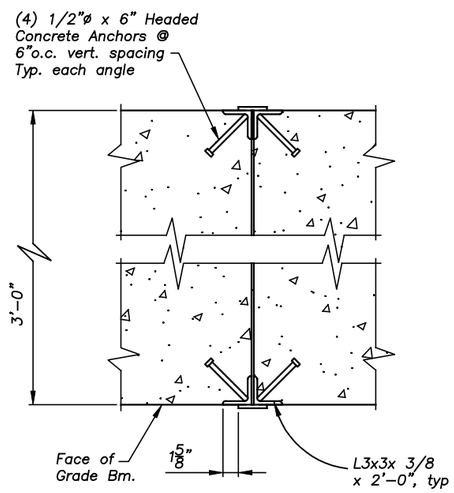

PLAN SECTION

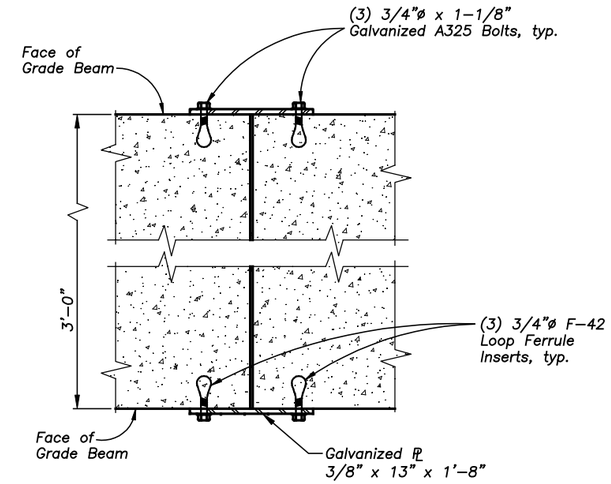

PLAN SECTION B-B

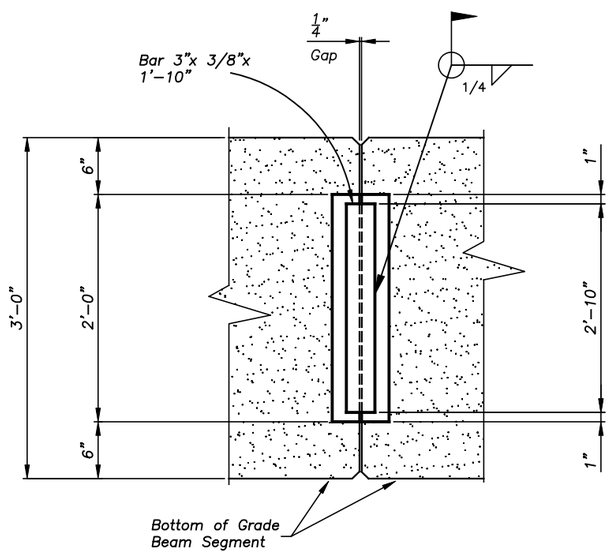

ELEVATION

FIELD WELD ALTERNATE

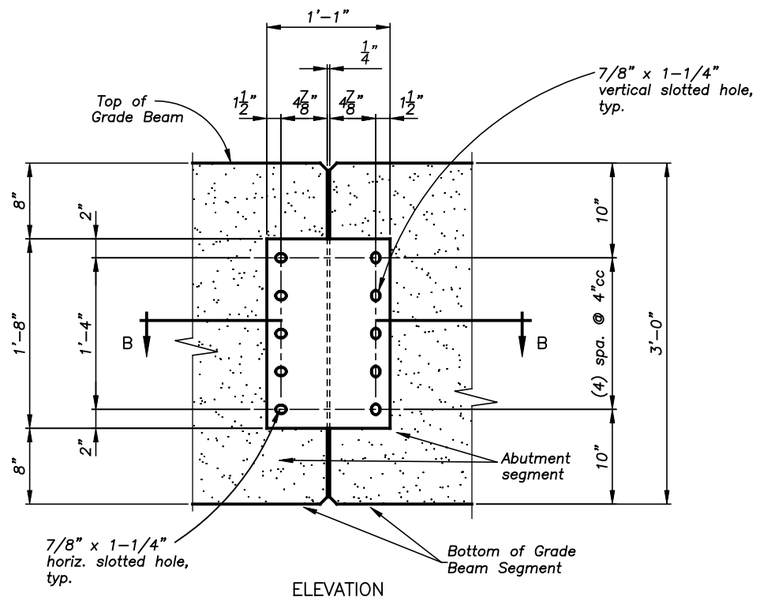

ELEVATION

FIELD BOLT ALTERNATE

OPTIONAL GRADE BEAM SPLICE DETAIL

Scale: 3/4" = 1'-0

D&A, P.C.
CONSULTING ENGINEERS & LAND SURVEYORS
3203 Russell Street, Missoula, Montana 59801-5991
Phone 406/721-4920 Fax 406/549-5971

FOREST SERVICE U.S. DEPARTMENT OF AGRICULTURE
REGION ONE

Sec. 15 T. 28 N R. 3 E Length 51' Width 22' Loading HS-20 Forest NEZ PERCE	DRAWING DATE: DEC 07 △ Revised Date △ Revised Date

WHITE BIRD CREEK BRIDGE ABUTMENT DETAILS

Designed CT Design Checked MJ Drawn CT Drawing Checked MJ	DRAWING NO. R2013 SHEET 9 OF 11

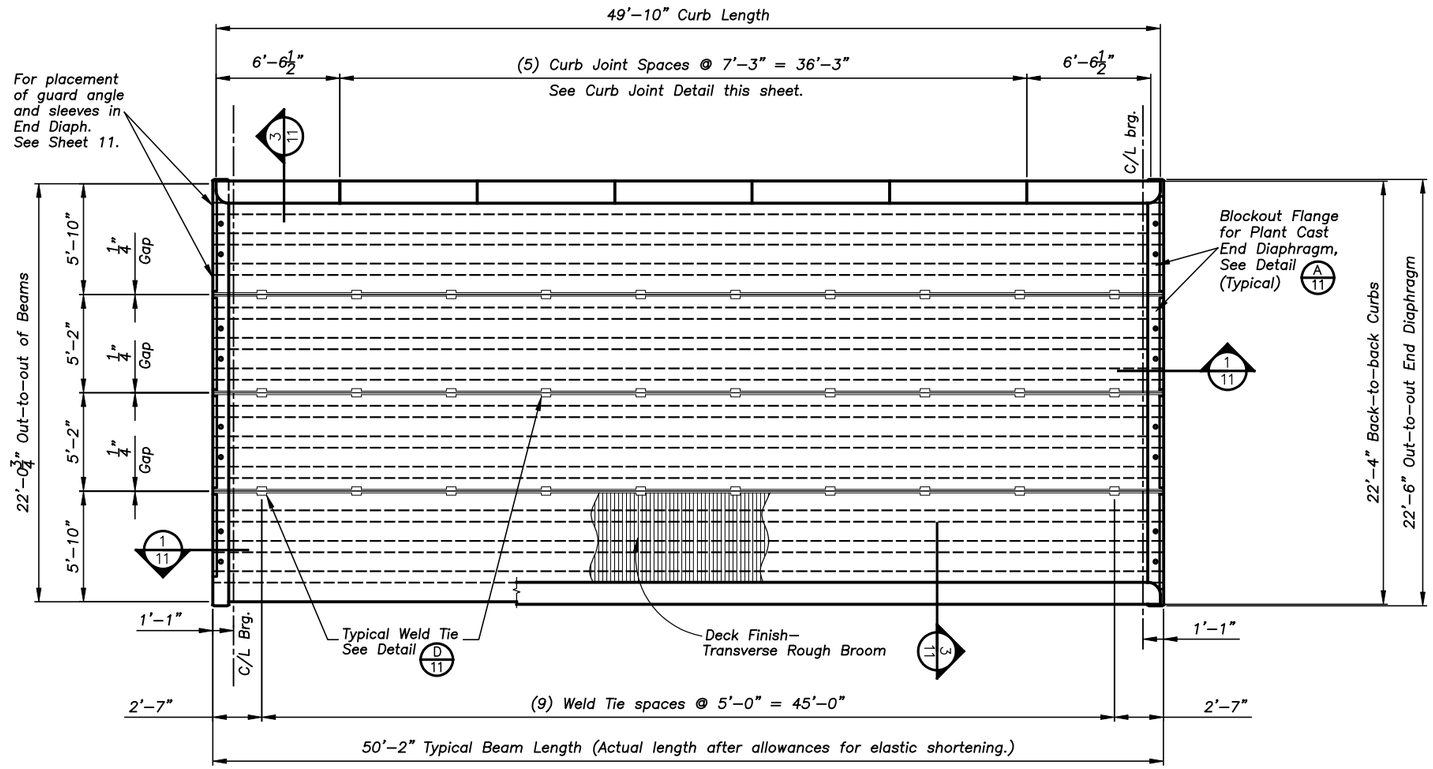

SUPERSTRUCTURE PLAN

Scale: 1/8" = 1'

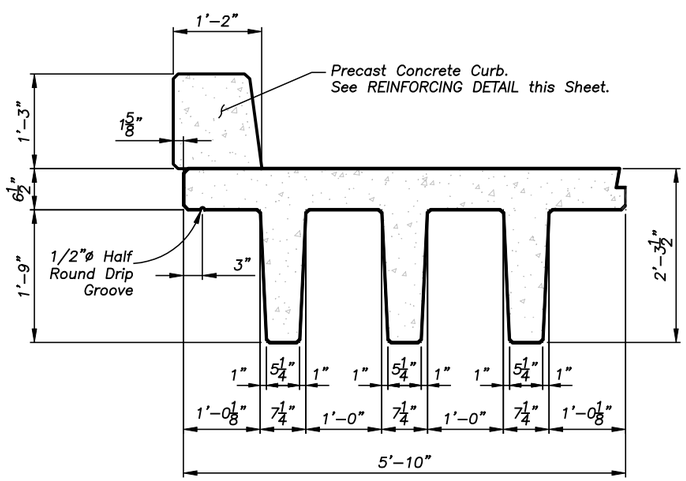

TYPICAL EXTERIOR BEAM

Scale: 1/2" = 1'

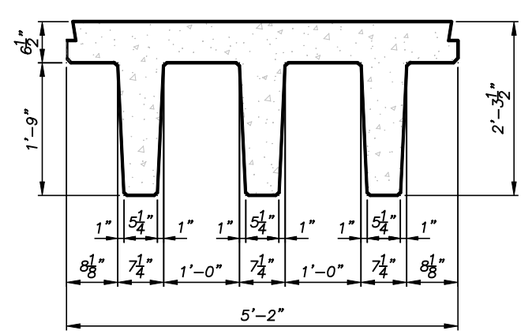

TYPICAL INTERIOR BEAM

Scale: 1/2" = 1'

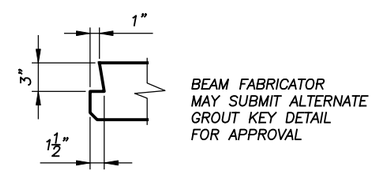

TYPICAL GROUT KEY

Scale: 3/4" = 1'–0"

PRESTRESSED BEAM NOTES:

PRESTRESSED CONCRETE BEAM DESIGN: Pretensioning is the only acceptable method of prestressing for this project.

The prestress fabricator shall provide the final design for all prestressed reinforcement and non–prestressed reinforcement in the section shown on this sheet. The design shall verify that allowable stress and ultimate strength requirements are met at all stages of construction. The final design shall be prepared by a licensed professional engineer whose signed seal shall be on the design documents. This design shall be submitted with the details of method, materials and equipment proposed for use in the prestressing operation as noted below and in the Standard Specifications 553. See General Notes on Sheet 2 for additional design and material specifications.

An alternate section of precast, prestressed concrete only may be proposed. The proposed alternate section may deviate 3" maximum in height and overall width must provide a 20 ft. clear opening between curbs. The finish grade elevation shall be maintained with adjustment made in the Grade Beam elevation. The alternate section must provide a minimum of 3' foot freeboard above the 100 year flood elevation shown on these Plans. The Contractor is responsible for revisions required in the end diaphragm reinforcement, connection to substructure, etc. (Note– Beams must be fabricated with an integral End Diaphragm). These revisions shall be submitted with the beam design as noted below.

Designs shall conform to Standard Specifications for Highway Bridges, 17th Edition, 2002.
Design notes as follows:

1) HS20–44 Live Load
2) Impact = 30%
3) Load Fraction as per AASHTO 3.23.4.
4) Total loss of prestress may be assumed to be 45 KSI
5) Superimposed dead load is 35 PSF for a future wearing surface. Superimposed dead load assumed to be equally distributed to the four beams in the section shown.
6) ½" of top flange shall be deducted to account for traffic wear in allowable stress checks at service after losses have occurred, beam web reinforcement design, and flexural strength determination.
7) Tension in precompressed tensile zone at service after losses have occurred is NOT allowed.

PRESTRESSED CONCRETE BEAMS: Prior to casting any prestressed members, calculations and shop drawings and complete details of the method, materials and equipment proposed for use in the prestressing operations shall be submitted a minimum of 21 days in advance of planned construction and shall bear the seal and signature of a professional engineer licensed in the state of Idaho.

FINISHING CONCRETE: The bottoms of all beam stems and exterior face of exterior beams shall be given a rubbed finish, except a concrete gray epoxy mortar using AASHTO M235 Class II Epoxy Resin Adhesive may be used instead of the specified sand–cement mortar to reduce curing time. The epoxy mortar shall be rubbed with cement prior to hardening. The ends of the beams shall have all holes or acceptable rock pockets patched and strands cut off flush or burned back.

FABRICATION, TRANSPORTATION, AND INSTALLATION OF PRESTRESSED BEAMS: Beams shall be erected using galvanized steel shims where necessary. Galvanized steel shims shall be the same size as the elastomeric bearing pads and shall be placed between the beams and the pads such that no more than 3/16" vertical variation exists between adjacent beam flanges at the centerline of bearing prior to attaching weld ties and filling shear keys with non–shrink mortar.

PAINTING OF WELD TIE CONNECTIONS AND GUARD ANGLES: All weld ties not covered by 1 inch or more of concrete shall be painted with one primer coat and two field coats. The field coats shall be aluminum paint conforming to AASHTO M69, Type II. The guard angles may be painted in the same way in lieu of galvanizing.

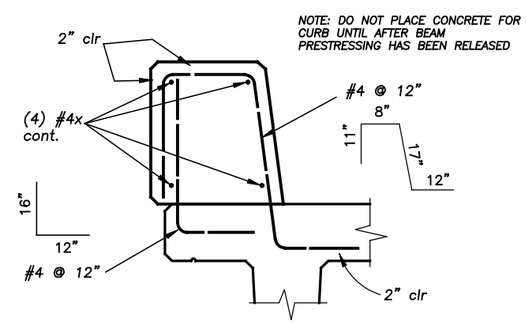

CURB REINFORCING

Scale: 3/4" = 1'–0"

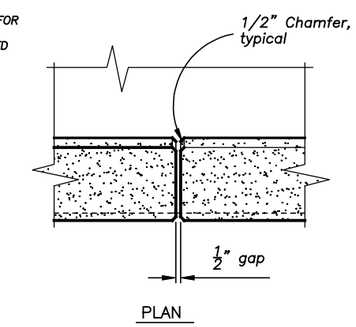

CURB JOINT

Not to Scale

Sec. 15 T. 28 N R. 3 E	DRAWING DATE: DEC 07
Length 51' Width 22'	△ Revised Date
Loading HS–20 Forest NEZ PERCE	△ Revised Date

D&A, P.C.
CONSULTING ENGINEERS & LAND SURVEYORS
3203 Russell Street, Missoula, Montana 59801-8591
Phone 406/721-4320 Fax 406/549-6371

FOREST SERVICE U.S. DEPARTMENT OF AGRICULTURE
REGION ONE

WHITE BIRD CREEK BRIDGE SUPERSTRUCTURE PLAN

Designed CT Design Checked MJ	DRAWING NO. R2013
Drawn CT Drawing Checked MJ	SHEET 10 OF 11

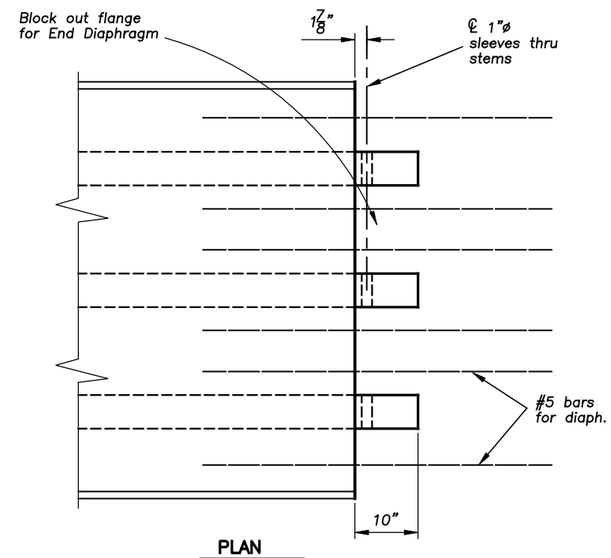

PLAN

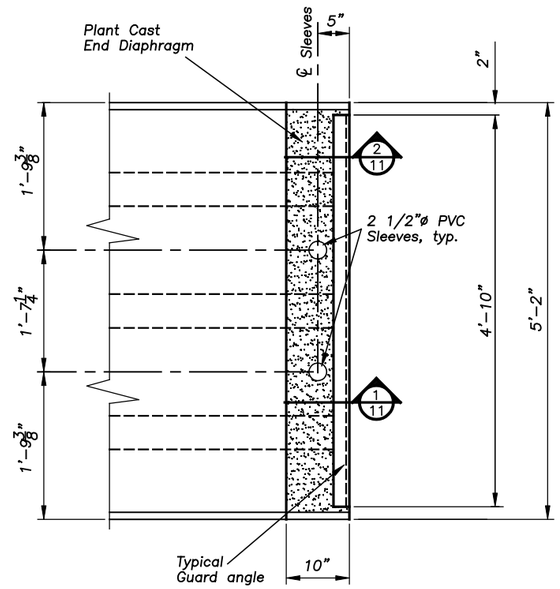

B/11 **DETAIL** Typical Int. Beam End Treatment

Scale: 1/2" = 1'-0"

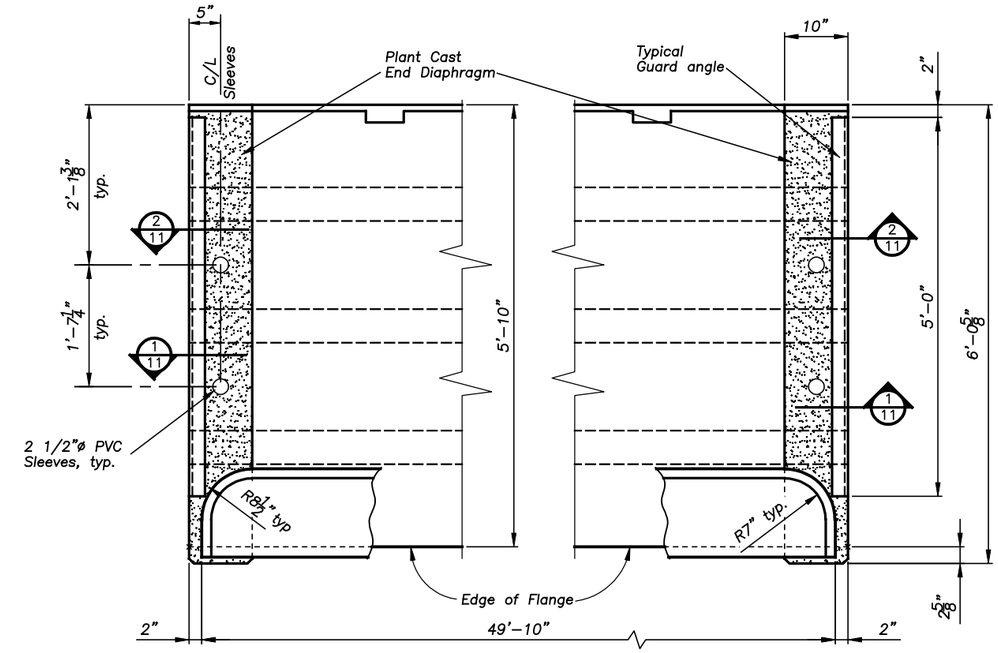

C/11 **DETAIL** Typical Ext. Beam End Treatment

Scale: 1/2" = 1'-0"

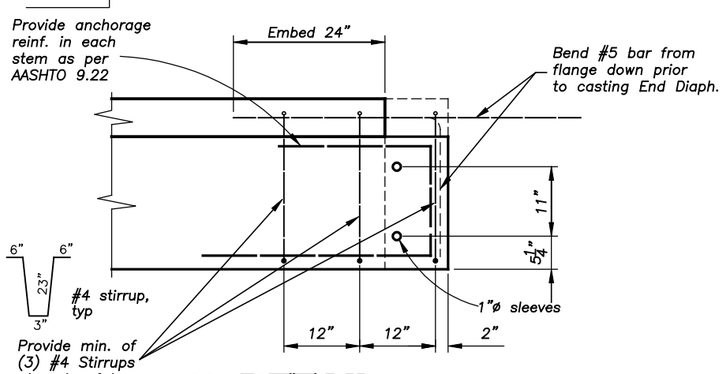

A/11 **DETAIL**

Scale: 1/2" = 1'-0"

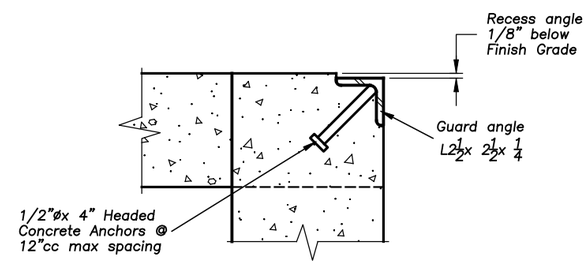

2/11 **SECTION**

Not to Scale

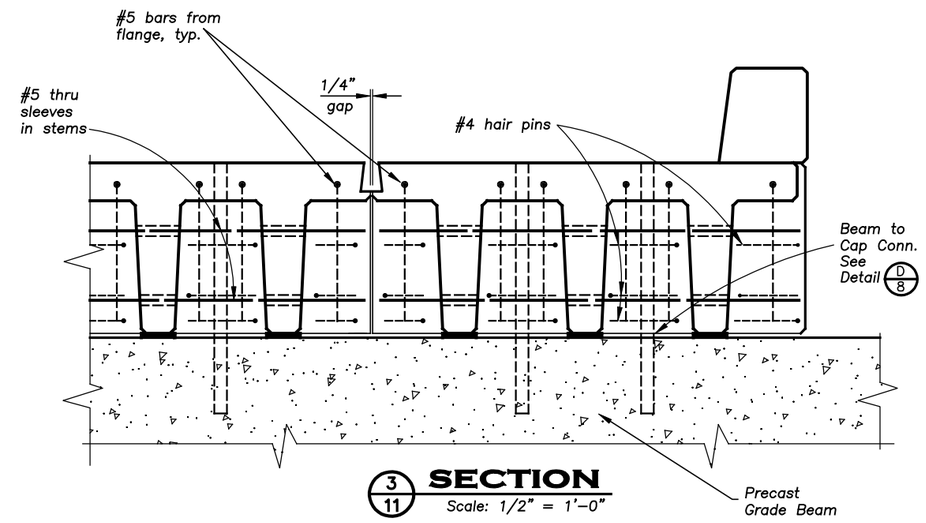

3/11 **SECTION**

Scale: 1/2" = 1'-0"

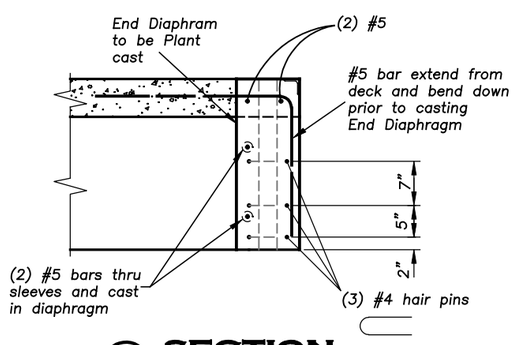

1/11 **SECTION**

Scale: 1/2" = 1'-0"

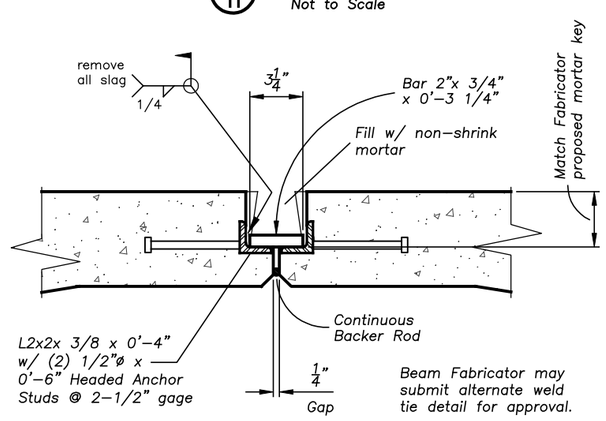

D/11 **DETAIL**

Not to Scale

D&A, P.C.
CONSULTING ENGINEERS & LAND SURVEYORS
3203 Russell Street, Missoula, Montana 59801-8991
Phone 406/721-4320 Fax 406/549-8371

FOREST SERVICE U.S. DEPARTMENT OF AGRICULTURE

REGION ONE

Sec. 15 T. 28 N R. 3 E	DRAWING DATE: DEC 07
Length 51' Width 22'	△ Revised Date
Loading HS-20 Forest NEZ PERCE	△ Revised Date

WHITE BIRD CREEK BRIDGE SUPERSTRUCTURE DETAILS

Designed CT Design Checked MJ	DRAWING NO. R2013
Drawn CT Drawing Checked MJ	SHEET 11 OF 11

S.F. WHITE BIRD CREEK BRIDGE
ROAD No. 642
ROADWAY CROSS SECTIONS

PREPARED BY : D&A, P.C.
CONSULTING ENGINEERS & LAND SURVEYORS
3203 Russell Street, Missoula, Montana 59801-5591
Phone 406/721-5320 Fax 406/549-5571

2+60

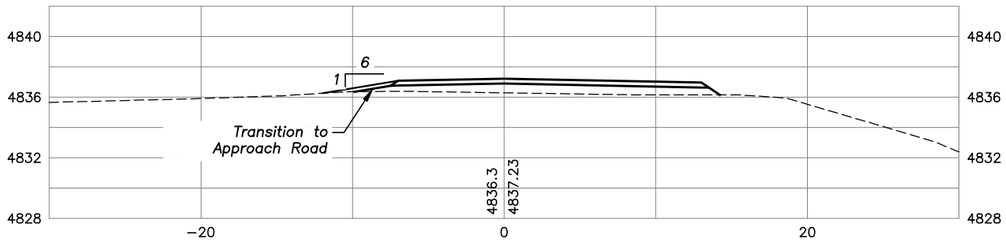

2+40

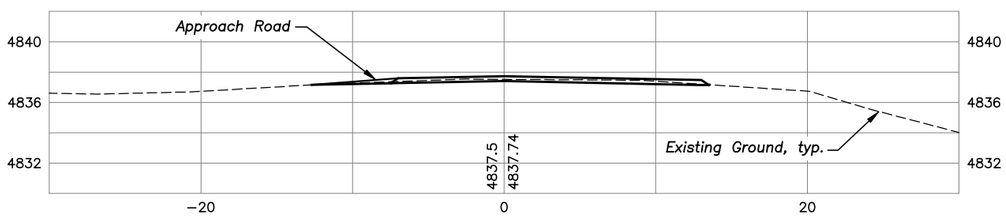

2+20

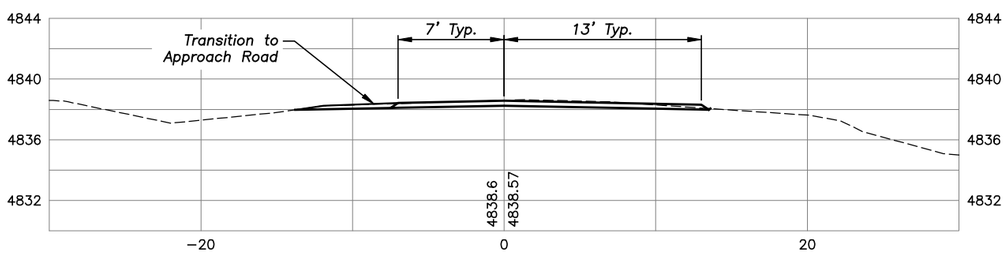

2+00

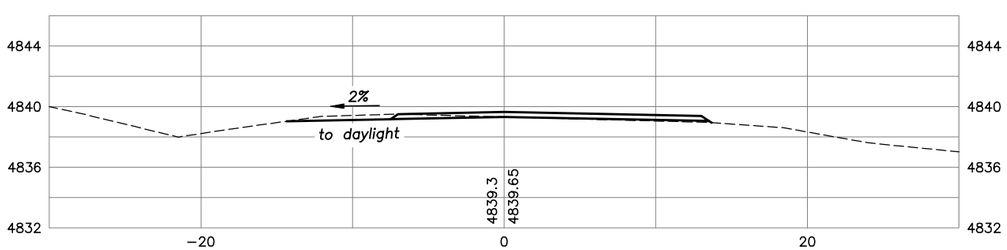

1+80

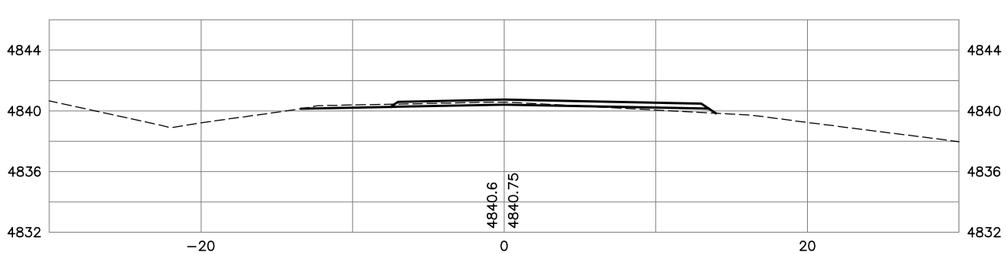

3+60

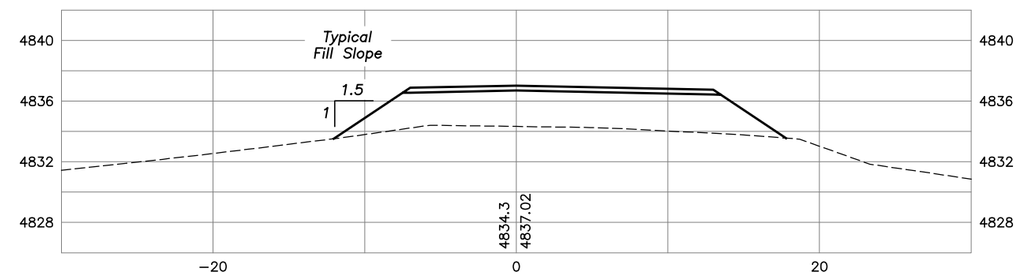

3+44.41

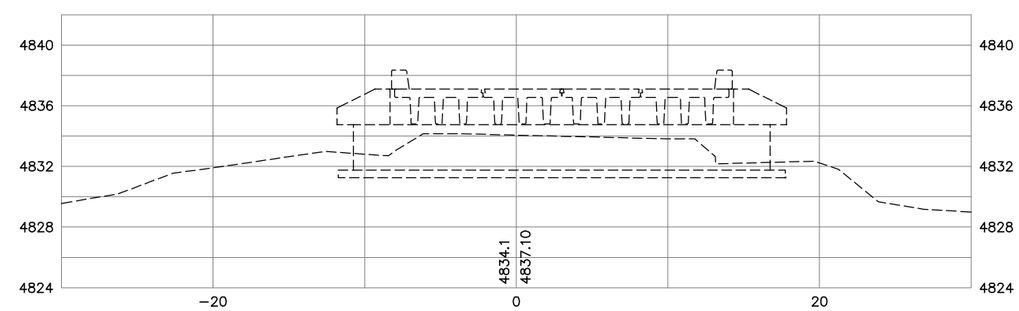

2+96.41

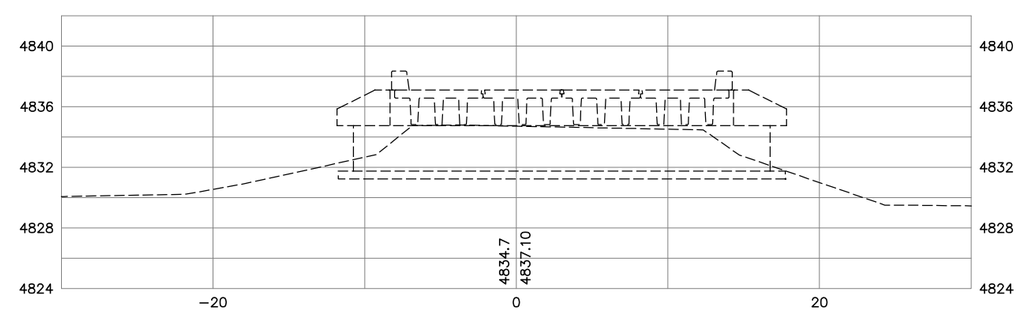

2+80

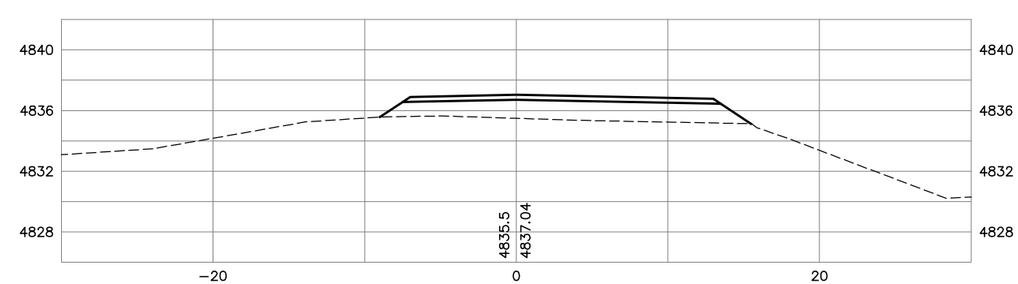

S.F. WHITE BIRD CREEK BRIDGE
ROAD No. 642
ROADWAY CROSS SECTIONS

PREPARED BY : D&A, P.C.
CONSULTING ENGINEERS & LAND SURVEYORS
3203 Russell Street, Missoula, Montana 59801-5591
Phone 406721-5320 Fax 406549-8571

4+40

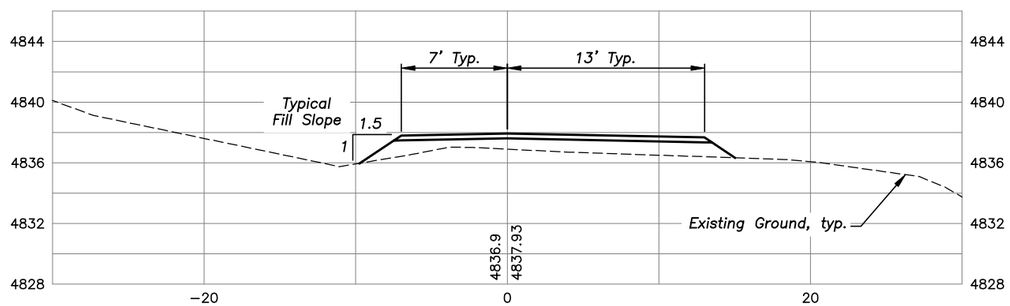

4+20

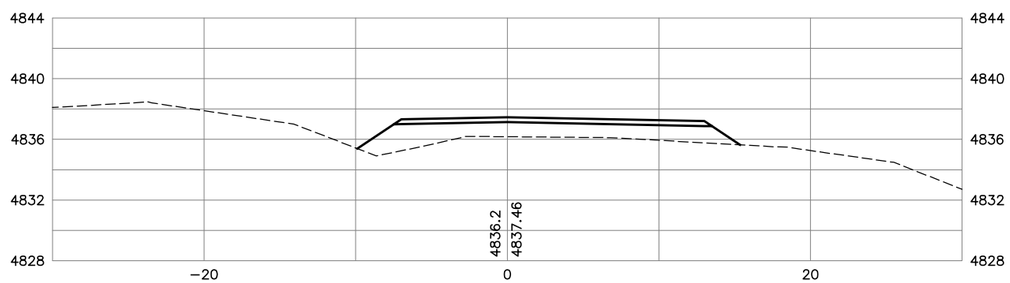

4+00

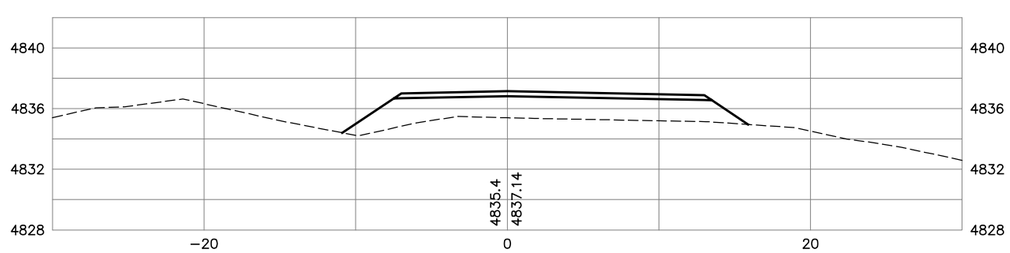

3+80

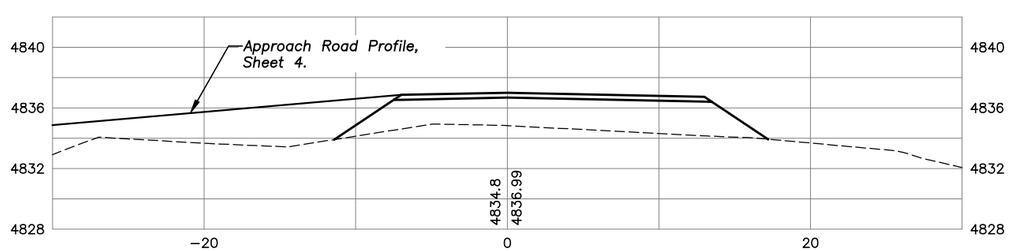

4+80

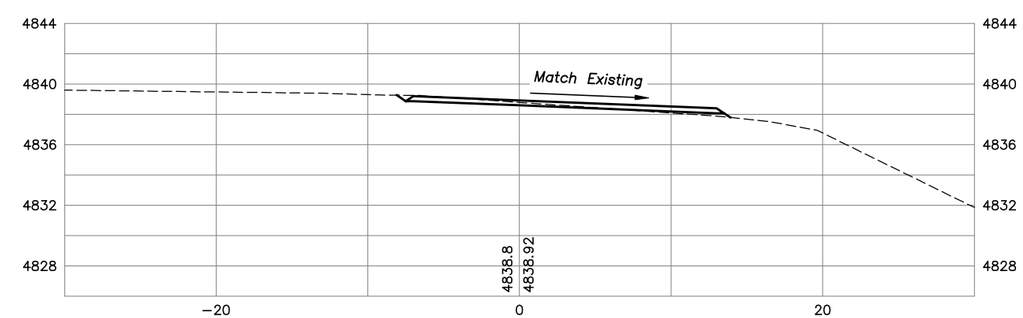
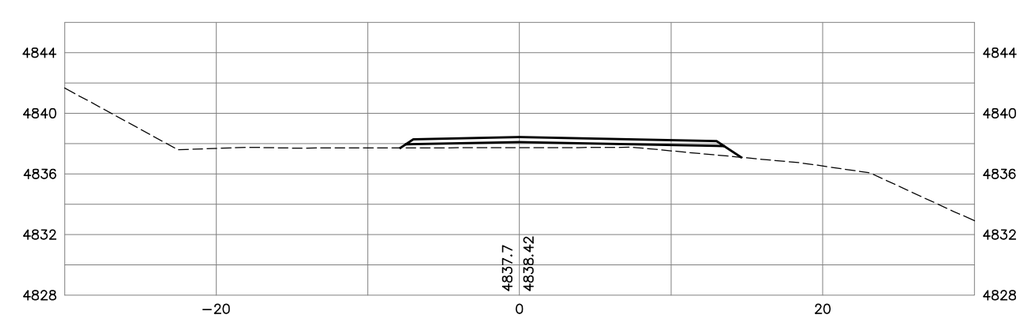
4+60