STATE	PROJECT	SHEET NUMBER
OR	PFH 22(14)	A.1

U. S. DEPARTMENT OF TRANSPORTATION
FEDERAL HIGHWAY ADMINISTRATION

PLANS FOR PROPOSED PROJECT

OR PFH 22(14)

MCKENZIE HIGHWAY

WILLAMETTE NATIONAL FOREST
LANE, LINN, AND DESCHUTES COUNTY
OREGON

LENGTH 15.532 MILES

Project Location

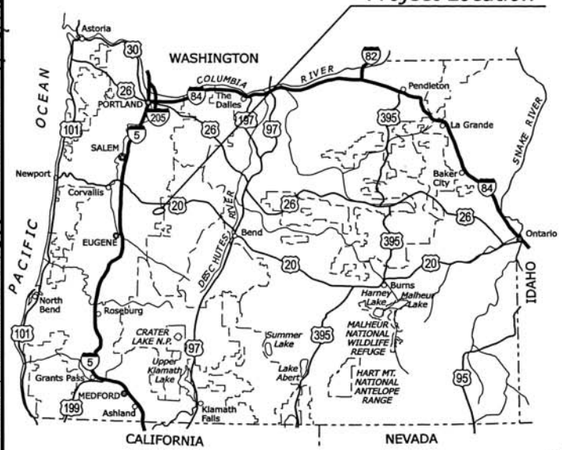

OREGON KEY MAP 1

P.E. Stamp was signed by Michael Odom in his capacity as an employee of David Evans & Associates.

REGISTERED PROFESSIONAL ENGINEER
13276PE
Michael W Odom
OREGON
JULY 1986
MICHAEL W. ODOM
EXPIRES 12-31-08

TYPE OF CONSTRUCTION:

Grading, Drainage, Milling, Paving, and Walls

DESIGN DESIGNATION:

ADT 2007	*420*
ADT 2027	*620*
V	*45 MPH*
e (max)	*Existing*

SPECIFICATION:

Standard Specifications for Construction of Roads and Bridges on Federal Highway Projects, FP-03 US Customary Units

FEDERAL LANDS HIGHWAY
COMMITMENT TO EXCELLENCE

PLANS PREPARED BY

DAVID EVANS AND ASSOCIATES INC.

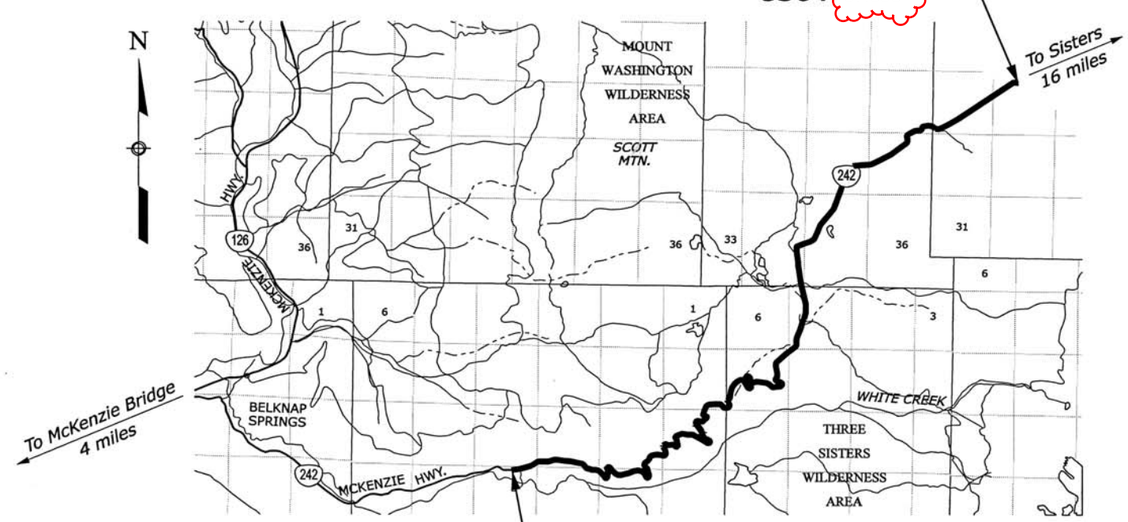

1 0 1 2 3 4
SCALE IN MILES

1 Revised per Amendment 1.

INDEX TO SHEETS

A. GENERAL INFORMATION
A.1 Title Sheet
A.2 Plan Symbols and Abbreviations
A.3 Vicinity Map
B. SUMMARIES
B.1-2 Summary of Quantities
C. TYPICAL SECTIONS
C.1 Mainline Typical Sections
C.2 Pavement Milling, Patching, and Overlay Details
C.3 Turnout Details
C.4 Dee Wright Parking Area
D. PLAN
D.1 Tabulation of Plan Quantities
D.2-28 Plan Sheets
E. ROAD APPROACH
E.1 Road Approach Details
F. RETAINING WALL
F.1 Gabion Wall Details
F.2 Gabion Basket Detail W253-1
G. DRAINAGE
G.1 Tabulation of Drainage Quantities
G.2 Cutoff Trench Drain Typical Details
H. EROSION CONTROL
H.1 Tabulation of Soil Erosion Control Quantities
H.2 Sediment Wattle Detail W157-20
I. TEMPORARY TRAFFIC CONTROL
I.1 Tabulation of Temporary Traffic Control Quantities
I.2 Temporary Traffic Control Plan Closure - Stage I
I.3 Temporary Traffic Control Plan Closure For Paving - Stage II
I.4 Temporary Sign Details
I.5 Temporary Traffic Control Advance Signing Std. Drwg. 635-1
I.6 Delineation And Signing For Unmarked Pavements Std. Drwg. 635-3
I.7 Temporary Traffic Control Single Lane Closure Layout (With Flaggers) Std. Drwg. 635-6
I.8 Temporary Traffic Control Sign Installation Std. Drwg. 635-14
J. PERMANENT TRAFFIC CONTROL
J.1 Tabulation of Delineators and Bollards
J.2 Delineator and Bollard Details
J.3-4 Tabulation of Permanent Traffic Control Quantities
J.5 Permanent Signing Details
J.6 Pavement Marking Details
J.7-33 Permanent Traffic Control Plan
J.34 Pavement Markings Symbols, and Words Detail W634-1

RECOMMENDED:

Project Manager, Western Federal Lands Highway Division — DATE 7/16/08

APPROVED:

Director, Project Delivery, Western Federal Lands Highway Division — DATE 7/16/08

P:\F\PHAX00000147\0400CAD\PS&E - Roadway\DGN\SHEETS\or2214aa.dgn | Designed by: T. BENNETT | 4/28/2008 | Checked by: M. HOHBACH 4/28/08 | 3/2008

STATE	PROJECT	SHEET NUMBER
OR	PFH 22(14)	A.3

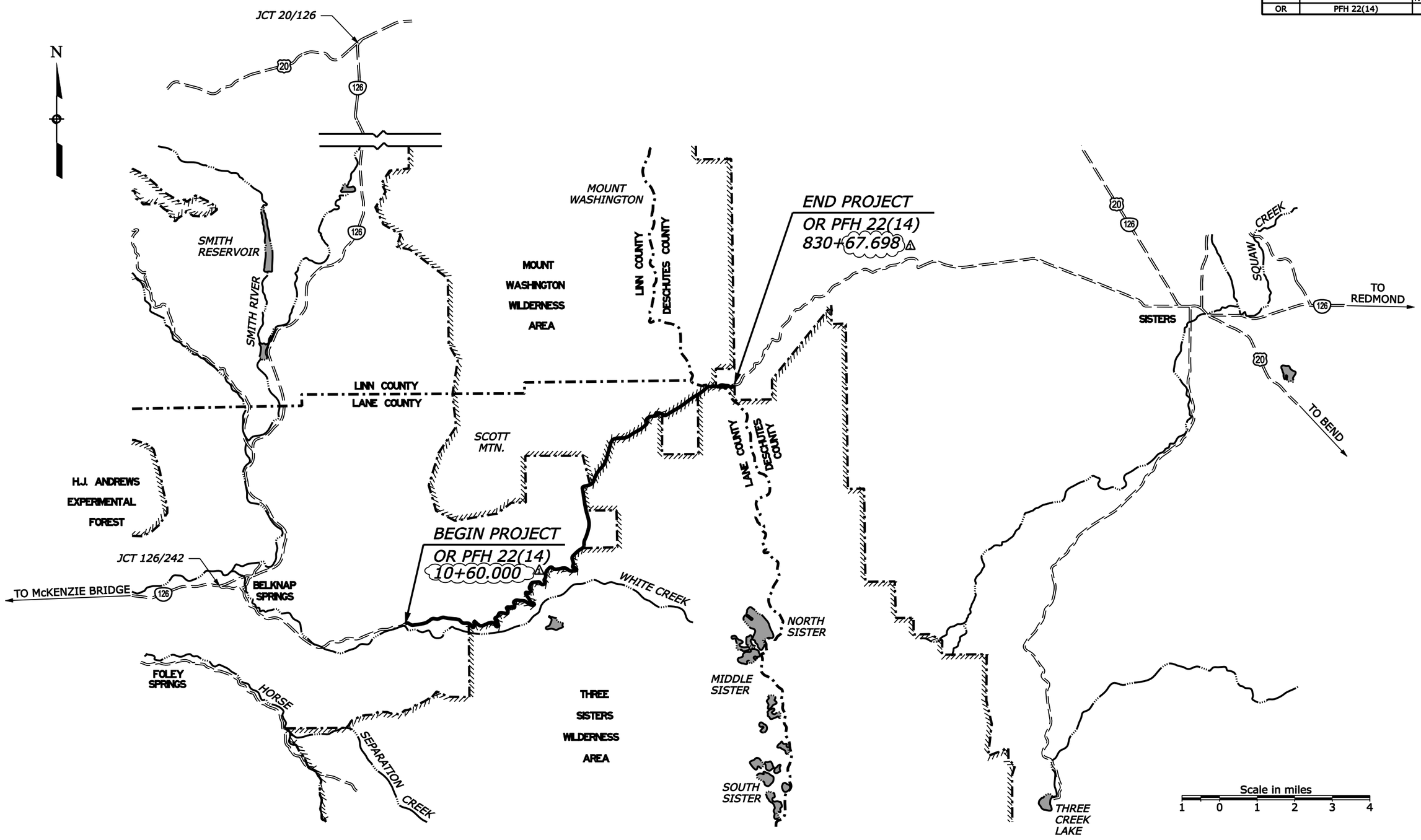

⚠ Revised by Amendment 1.

VICINITY MAP

I:\Project_Dev\Oregon\Mckenzie\ORPFH 22(14) McKenzie Highway\Plans\Sheets\Ammendments\or2214ab.dgn _DATE_ " + " _FILE_ | Designed by: T. BENNETT 3/2008 | Checked by: M. HOHBACH 3/2008

SUMMARY OF QUANTITIES

ITEM	DESCRIPTION	UNIT	C. TYPICAL SECTION	D. PLAN	F. RETAINING WALL	G. DRAINAGE	H. EROSION CONTROL	I. TEMPORARY TRAFFIC CONTROL	J. PERMANENT TRAFFIC CONTROL							ESTIMATED QUANTITIES PLAN	ESTIMATED QUANTITIES BID SCHEDULE
	PLAN SHEET SECTION -------->>																
60510-0800	6-INCH OUTLET PIPE	LNFT				20										20	22
60704-0000	CLEANING CULVERT IN PLACE	EACH				21										21	22
61904-0000	BOLLARD POST	EACH							9							9	10
62201-0200	DUMP TRUCK, 8 CUBIC YARD MINIMUM CAPACITY	HOUR															60
62201-0700	BACKHOE LOADER, 1 CUBIC YARD MINIMUM CAPACITY FRONTEND BUCKET, 10 CUBIC FOOT MINIMUM CAPACITY BACKHOE BUCKET, 90 HP	HOUR															60
62201-2050	ROLLER	HOUR															40
62201-2800	MOTOR GRADER, 8 FOOT MINIMUM BLADE	HOUR															80
62301-0000	GENERAL LABOR	HOUR															80
63302-0000	SIGN SYSTEM	SQFT							1223							1223	1,250
63309-0000	DELINEATOR , TYPE 1 AND TYPE 2, STOCKPILED	EACH															40
63309-0000	DELINEATOR , TYPE 1	EACH							154							154	160
63309-0000	DELINEATOR , TYPE 2	EACH							16							16	18
63318-1000	SNOWPOLE HOLDER , REMOVE AND RESET	EACH							12							12	13
63401-0300	PAVEMENT MARKINGS, TYPE B, SOLID WHITE	LNFT							600							600	650
63401-0300	PAVEMENT MARKINGS, TYPE B, SOLID YELLOW	LNFT							290960							290960	292,000
63401-0400	PAVEMENT MARKINGS, TYPE B, BROKEN YELLOW	LNFT							31760							31760	32,000
63405-0850	PAVEMENT MARKINGS, TYPE B, ACCESSIBILITY SYMBOL	EACH							2							2	2
63502-0600	TEMPORARY TRAFFIC CONTROL, BARRICADE TYPE 3 (CENTER)	EACH						9								9	9
63502-0900	TEMPORARY TRAFFIC CONTROL, CONE, TYPE 28-INCH	EACH	1					300	1							300	300 1
63504-1000	TEMPORARY TRAFFIC CONTROL, CONSTRUCTION SIGN	SQFT						456	1							456	460 1
63506-0600	TEMPORARY TRAFFIC CONTROL, PILOT CAR	HOUR						50								50	50
63507-0700	TEMPORARY TRAFFIC CONTROL, TRAFFIC AND SAFETY SUPERVISOR	DAY						90								90	90
63507-0800	TEMPORARY TRAFFIC CONTROL, PORTABLE CHANGEABLE MESSAGE SIGN	DAY						320	1							320	320 1
63509-1000	TEMPORARY TRAFFIC CONTROL, FLAGGER	FIX HR RATE						250								250	250

1 Revised per Amendment 1.

4/2008 M. HOHBACH Checked by: 4/2008 T. BENNETT Designed by: 24-Sep-2008 10:00 I:\Project_Dev\Oregon\McKenzie\ORPFH 22(14) McKenzie

STATE	PROJECT	SHEET NUMBER
OR	PFH 22(14)	C.2

PAVEMENT MILLING AND PATCHING

APPROXIMATE LOCATION	SIDE	HOT ASPHALT CONCRETE PAVEMENT, GRADING C ITEM 40301-0300 (TON)	ASPHALT PAVEMENT MILLING 3-INCH DEPTH ITEM 41301-0800 (SQYD)
13+20 to 14+00	RT	6	35
14+10 to 14+40	LT	2	13
14+90 to 15+70	LT	6	35
15+20 to 15+60	RT	3	18
16+30 to 17+05	RT	5	33
18+70 to 19+20	LT	4	22
19+60 to 20+00	RT	3	18
20+30 to 20+40	LT	1	4
20+70 to 21+70	LT	7	44
23+10 to 23+20	LT	1	4
24+70 to 25+90	LT	9	53
27+20 to 27+90	LT	5	31
35+05 to 35+90	RT	6	38
69+50 to 69+80	LT	2	13
69+95 to 72+85	RT	21	129
79+00 to 80+00	RT	7	44
104+50 to 106+30	RT	13	80
107+60 to 108+80	RT	9	53
110+00 to 110+30	RT	2	13
110+00 to 110+30	LT	2	13
115+40 to 115+70	RT	2	13
148+60 to 148+70	LT	1	4
169+05 to 169+25	RT	2	9
208+65 to 208+85	LT	2	9
209+40 to 210+00	RT	4	27
211+05 to 211+30	LT	2	11
213+50 to 214+10	LT	4	27
218+05 to 218+40	RT	3	16
218+70 to 219+10	RT	3	18
219+80 to 220+10	RT	2	13
238+40 to 238+60	RT	2	9
240+25 to 240+45	RT	2	9
271+60 to 271+80	LT	2	9
273+70 to 275+00	LT	9	58
280+20 to 280+40	LT	2	9
280+40 to 280+50	RT	1	4
329+70 to 330+20	LT	4	22
332+30 to 332+95	LT	5	29
535+85 to 536+70	LT	6	38
555+40 to 556+10	RT	5	31
643+20 to 644+30	RT	8	49
703+30 to 704+40	LT	8	49
764+80 to 766+00	RT	9	53
768+50 to 768+90	RT	3	18
TOTAL		205	1,227

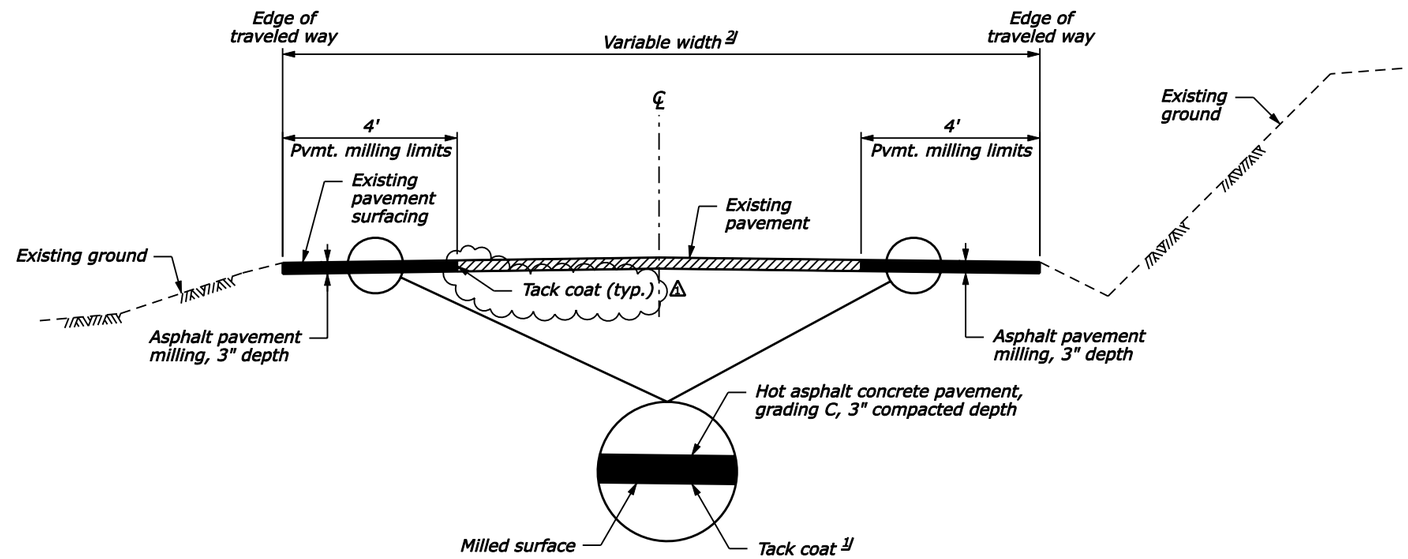

PAVEMENT MILLING AND PATCHING DETAIL - PART WIDTH

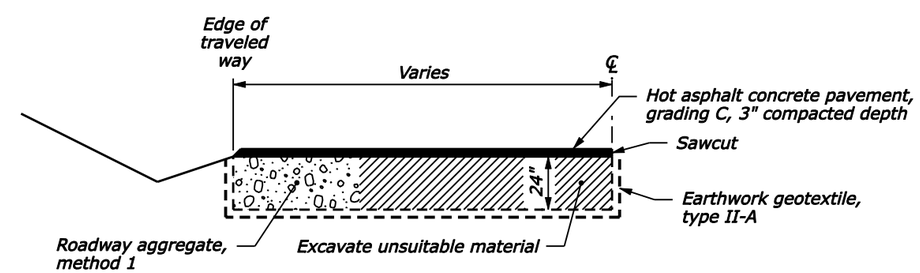

SUBEXCAVATION DETAILS

△1 Revised by Amendment 1.

SUBEXCAVATION

LOCATION	SUBEXCAVATION ITEM 20402-0000 (CUYD)	ROADWAY AGGREGATE, METHOD 1 ITEM 30802-1000 (TON)	EARTHWORK GEOTEXTILE, TYPE II-A ITEM 20701-0700 (SQYD)	HOT ASPHALT CONCRETE PAVEMENT, GRADING C ITEM 40301-0300 (TON)	DEPTH OF SUBEXCAVATION
218+30 to 218+70 RT	27	53	58	7	24"
565+55 to 566+52 LT	64	126	141	13	24"
567+13 to 567+34 LT	13	26	31	3	24"
TOTAL	104	205	230	23	

NOTE:

1. Milling and subexcavation locations are approximate beginning and ending stations. Field adjust with CO approval as needed.

FOOTNOTE:

1/ Do not apply if underlaying milled surface is aggregate.

2/ Existing pavement width varies 17'- 20'. Do not mill paved turnouts or parking areas; accept as shown on Sheet C.4.

PAVEMENT MILLING, PATCHING, AND OVERLAY DETAILS

I:\Project_Dev\Oregon\McKenzie\ORPFH 22(14) McKenzie Highway\Plans\Sheets\Ammendments\or2214cb.dgn _DATE_ " + " _FILE_ Designed by: T. BENNETT 3/2008 Checked by: M. HOHBACH 3/2008

TURNOUTS

APPROXIMATE LOCATION	SIDE	ROADWAY AGGREGATE, METHOD 1 ITEM 30802-1000 (TON)	SUPERPAVE PAVEMENT, ½" NOMINAL MAXIMUM SIZE AGGREGATE, 0.3 TO <3 MILLION ESAL, TYPE IV PAVEMENT ROUGHNESS ITEM 40101-0600 (TON)	TYPE
Lower staging area near B.O.P.	RT	400		Aggregate
31+80 to 32+50	RT	10		Aggregate
35+10 to 35+90	RT	12		Aggregate
47+10 to 47+60	RT	7		Aggregate
158+20 to 158+75	RT	10		Aggregate
214+90 to 215+75	RT	16		Aggregate
302+30 to 304+00	RT	7		Aggregate
311+20 to 312+10	RT	30		Aggregate
315+40 to 316+30	LT	17		Aggregate
319+35 to 320+50	LT	22		Aggregate
324+90 to 325+90	LT	27		Aggregate
346+70 to 348+00	LT	5		Aggregate
364+60 to 365+60	LT	25		Aggregate
366+60 to 367+50	LT	21		Aggregate
394+20 to 394+80	RT	8		Aggregate
401+50 to 402+70	RT		18	Extg. pavement
424+75 to 425+25	LT	10		Aggregate
432+30 to 432+80	LT	9		Aggregate
471+45 to 473+50	RT		25	Extg. pavement
501+10 to 503+80	RT	13	20	Extg. pavement and aggregate
501+50 to 503+80	LT		20	Extg. pavement
532+00 to 535+00	RT		58	Extg. pavement
562+00 to 563+60	RT		19	Extg. pavement
564+00 to 564+50	LT	8		Aggregate 3
569+10 to 569+80	LT	13		Aggregate
642+20 to 644+10	LT		20	New pavement
703+40 to 704+40	LT	26		Aggregate
705+80 to 707+15	RT		34	Extg. pavement
712+20 to 714+10	RT	50		Aggregate
729+10 to 730+10	LT	18		Aggregate
745+50 to 750+40	RT		78	Extg. pavement
791+60 to 793+20	LT	55	50	New pavement
TOTAL		819	342	

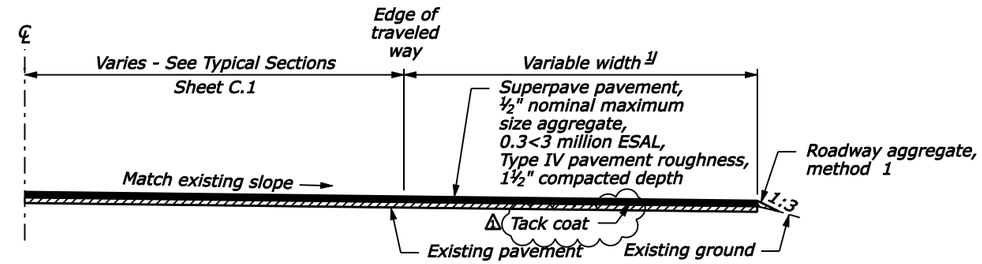

TYPICAL SECTION FOR EXISTING PAVED TURNOUTS (EXTG. PAVEMENT)

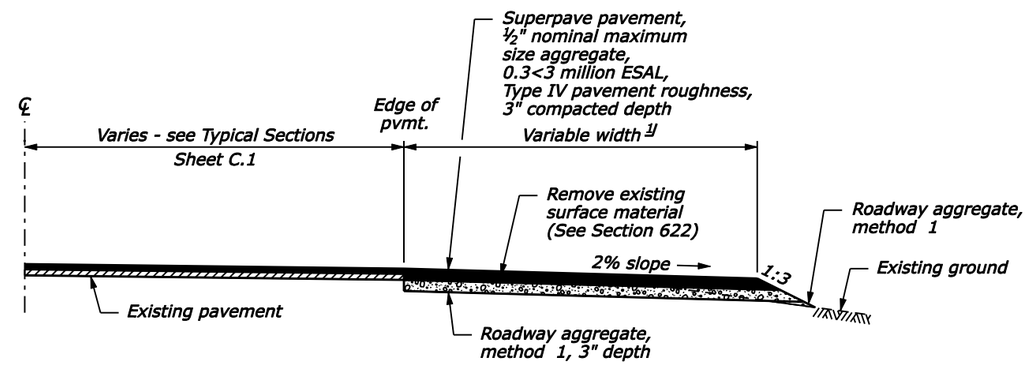

TYPICAL SECTION FOR NEW PAVED TURNOUTS (NEW PAVEMENT)

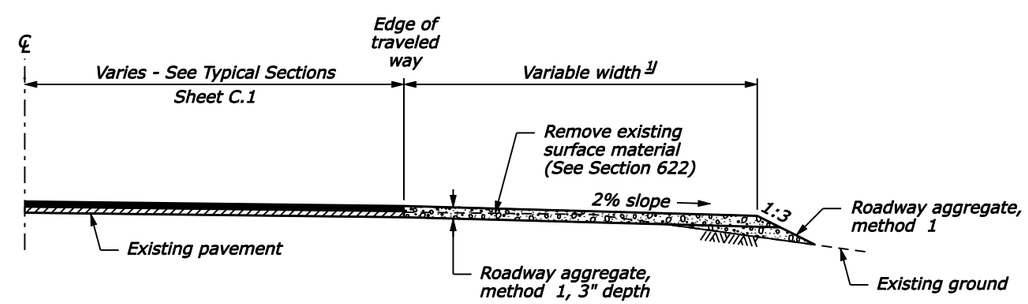

TYPICAL SECTION FOR AGGREGATE SURFACED TURNOUTS (AGGREGATE)

NOTE:

1. *Slope ratios are shown in vertical:horizontal.*

FOOTNOTE:

1/ *Match existing surfacing width unless otherwise indicated on plan sheets.*

3 *Revised by Amendment 1.*

TURNOUT DETAILS

I:\Project_Dev\Oregon\McKenzie\ORPFH 22(14) McKenzie Highway\Plans\Sheets\Ammendments\or2214cc.dgn _DATE_" + "_FILE_ Designed by: T. BENNETT 3/2008 Checked by: M. HOHBACH 3/2008

or2214cc.dgn 9/29/2008 9:35:29 AM

STATE	PROJECT	SHEET NUMBER
OR	PFH 22(14)	D.2

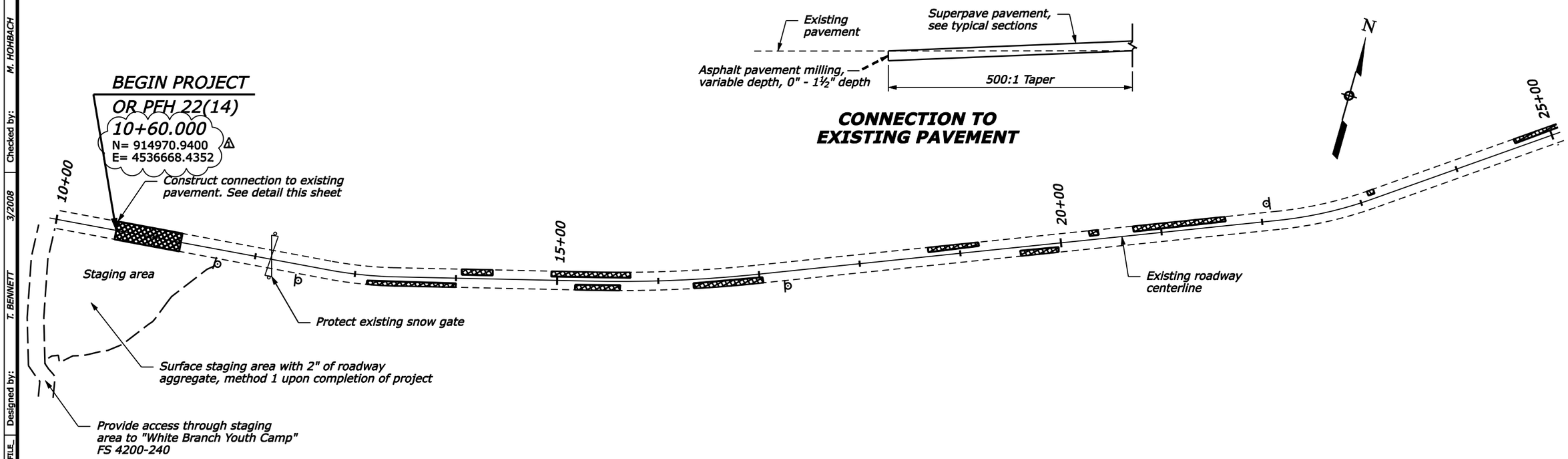

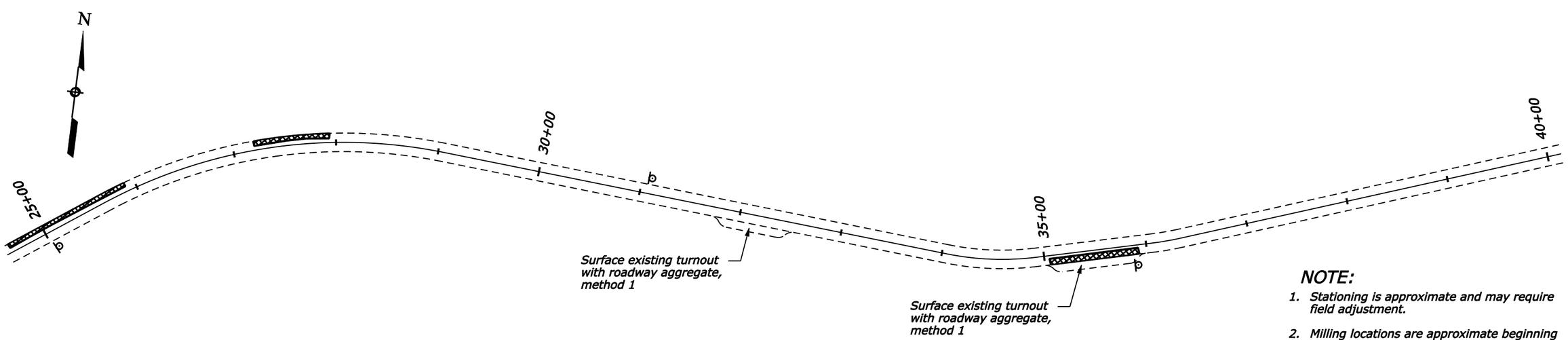

NOTE:

1. Stationing is approximate and may require field adjustment.
2. Milling locations are approximate beginning and ending stations. Field adjust with CO approval as needed. See detail Sheet C.2

⚠ Revised by Amendment 1.

LEGEND

Pavement milling areas

Snow gate

PLAN SHEETS

I:\Project_Dev\Oregon\McKenzie\ORPFH 22(14) McKenzie Highway\Plans\Sheets\Ammendments\or2214fb.dgn _DATE_ " + " _FILE_ Designed by: T. BENNETT 3/2008 Checked by: M. HOHBACH 3/2008

STATE	PROJECT	SHEET NUMBER
OR	PFH 22(14)	D.24

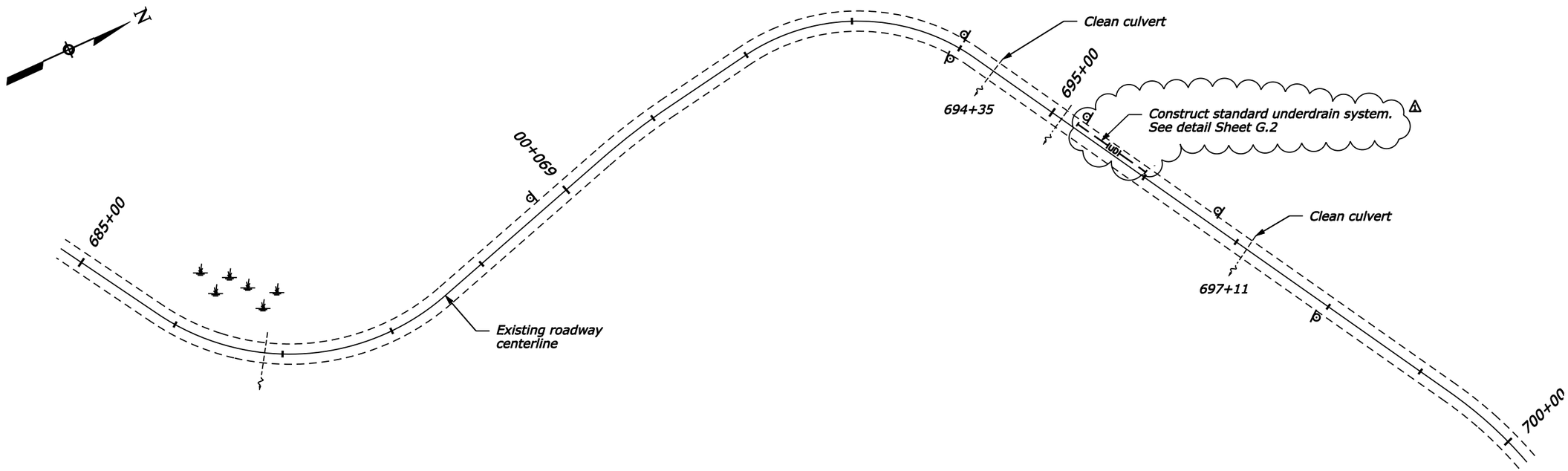

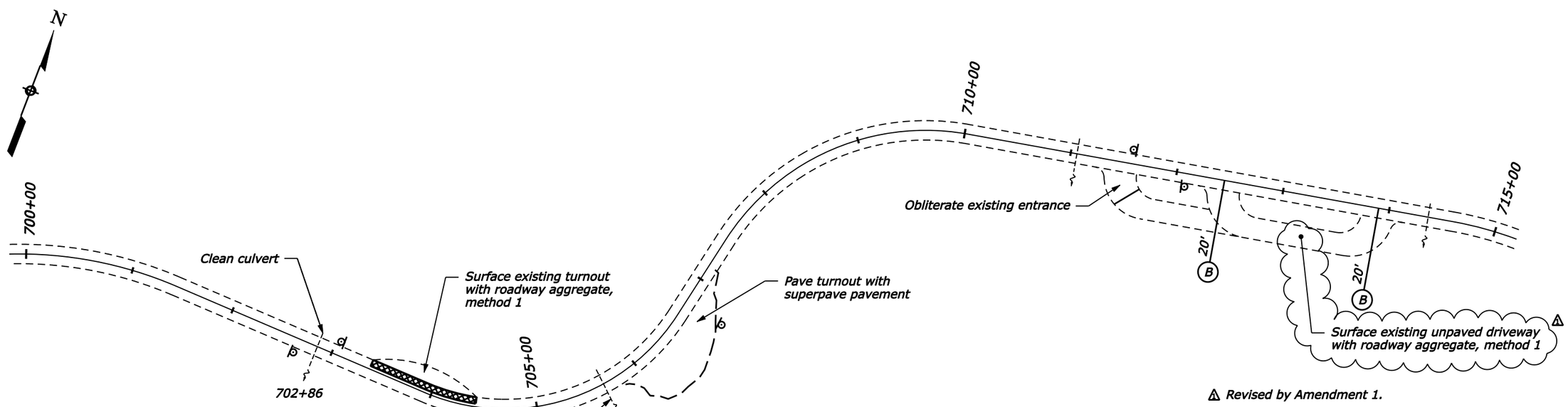

1 Revised by Amendment 1.

LEGEND

- Pavement milling areas
- B — Approach road
- UDI — Standard underdrain system 1

PLAN SHEETS

I:\Project_Dev\Oregon\McKenzie\ORPFH 22(14) McKenzie Highway\Plans\Sheets\Ammendments\or2214fe.dgn _DATE_ " + " _FILE_ Designed by: T. BENNETT 3/2008 Checked by: M. HOHBACH 3/2008

or2214fe.dgn 9/29/2008 9:39:43 AM

STATE	PROJECT	SHEET NUMBER
OR	PFH 22(14)	D.28

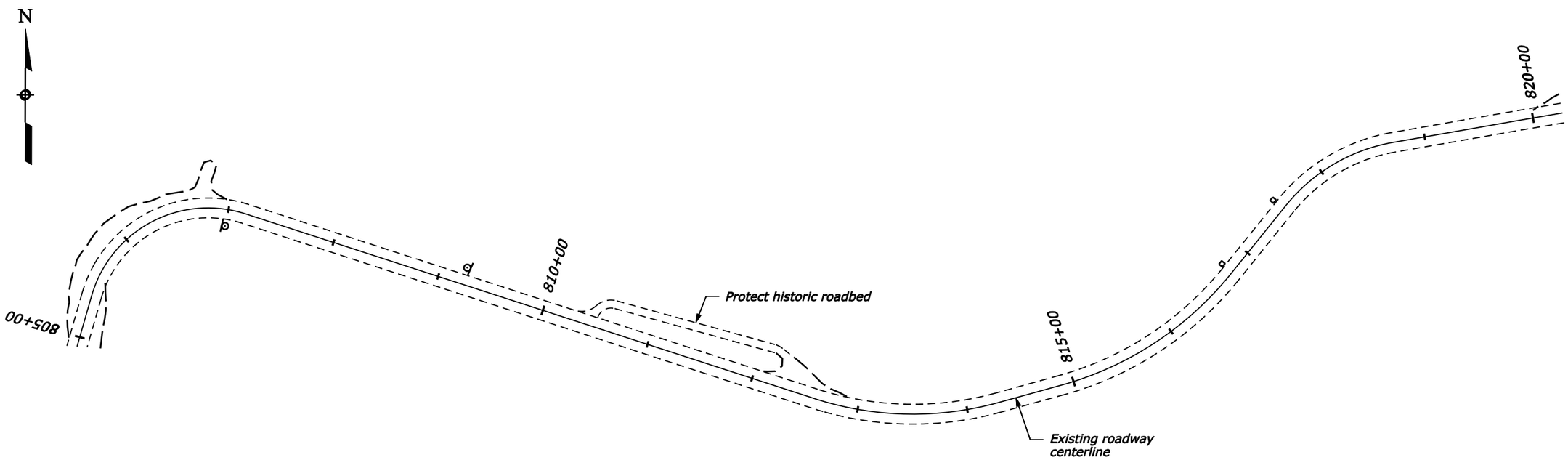

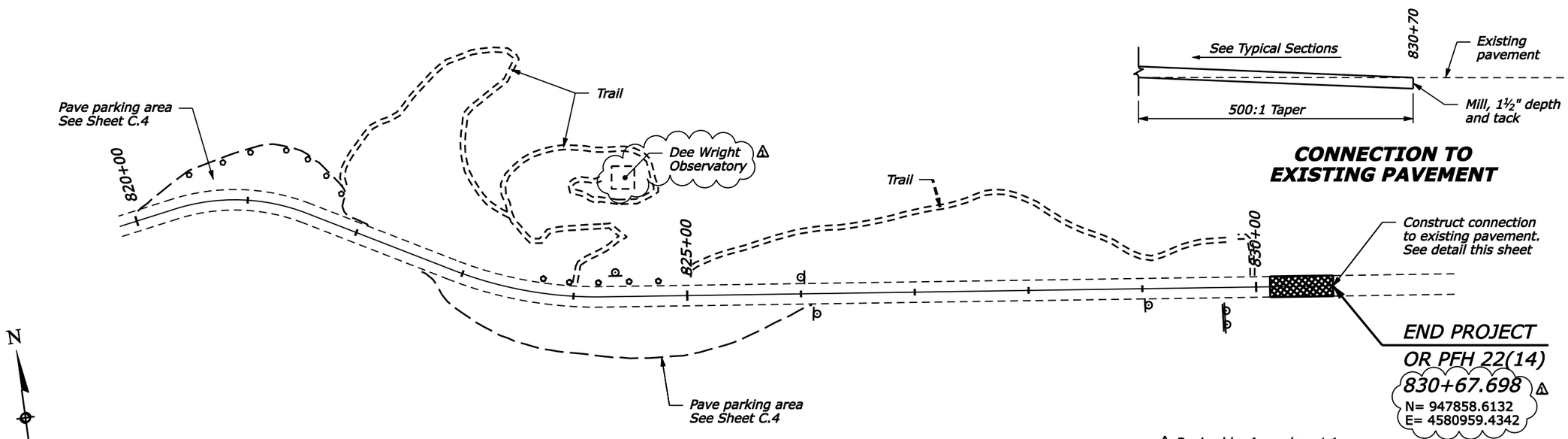

Revised by Amendment 1.

LEGEND

- Pavement milling areas
- Existing snowpole holders
- Existing delineator

PLAN SHEETS

I:\Project_Dev\Oregon\McKenzie\ORPFH 22(14) McKenzie Highway\Plans\Sheets\Ammendments\or2214fe.dgn _DATE_ " + " _FILE_ Designed by: T. BENNETT 3/2008 Checked by: M. HOHBACH 3/2008

STATE	PROJECT	SHEET NUMBER
OR	PFH 22(14)	G.2

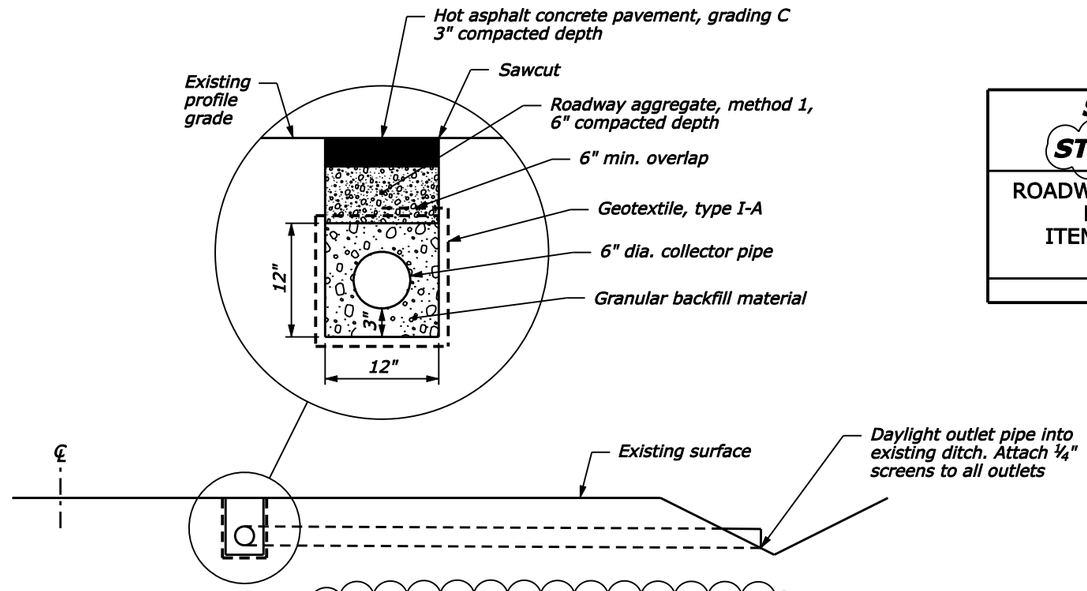

STANDARD UNDERDRAIN SYSTEM △1
SECTION A-A

SURFACING QUANTITIES FOR STANDARD UNDERDRAIN SYSTEM △1	
ROADWAY AGGREGATE, METHOD 1 ITEM 30802-1000 (TON)	HOT ASPHALT CONCRETE PAVEMENT, GRADING C ITEM 40301-0300 (TON)
4	2

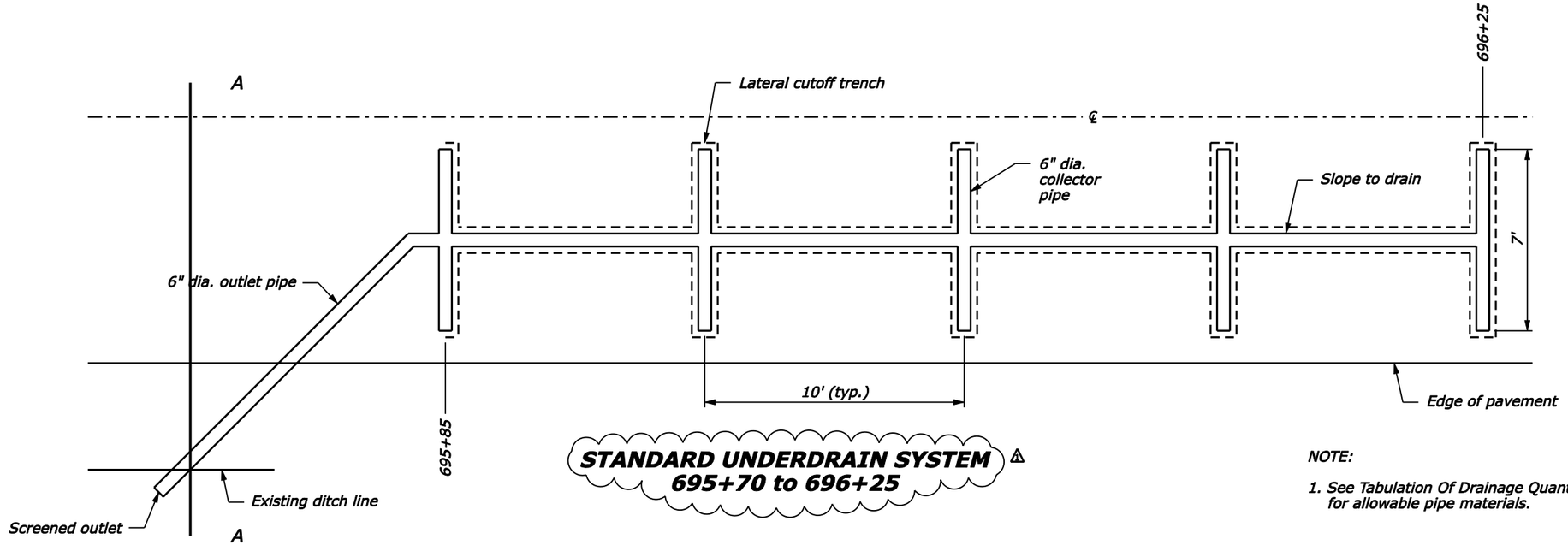

STANDARD UNDERDRAIN SYSTEM △1
695+70 to 696+25

NOTE:

1. See Tabulation Of Drainage Quantities on Sheet G.1 for allowable pipe materials.

△1 Revised by Amendment 1.

STANDARD UNDERDRAIN SYSTEM △1
TYPICAL DETAILS

1:\Project_Dev\Oregon\McKenzie\ORPFH 22(14) McKenzie Highway\Plans\Sheets\Ammendments\or2214eb.dgn _DATE_" + "_FILE_ Designed by: T. BENNETT 3/2008 Checked by: M. HOHBACH 3/2008

STATE	PROJECT	SHEET NUMBER
OR	PFH 22(14)	I.1

TEMPORARY TRAFFIC CONTROL, BARRICADE, TYPE 3 (CENTER) ITEM 63502-0600

APPROXIMATE LOCATION	QUANTITY (each)
12+00	3
820+00	3
M.P. 83.7	3
TOTAL	9

TEMPORARY TRAFFIC CONTROL, CONE, TYPE 28-INCH ITEM 63502-0900

QUANTITY (each)
300

TEMPORARY TRAFFIC CONTROL, CONSTRUCTION SIGN ITEM 63504-1000

MUTCD REF. NO.	SIGN LEGEND	SIGN SIZE	NUMBER OF SIGNS	AREA (sqft)
R11-3a	ROAD CLOSED XX MILES AHEAD LOCAL TRAFFIC ONLY	60" x 30"	2	25
W20-3	ROAD CLOSED 1500 FT	36" x 36"	2	18
W20-3	ROAD CLOSED AHEAD	36" x 36"	2	18
W20-1	ROAD WORK 500 FT	36" x 36"	2	18
R11-2	ROAD CLOSED	48" x 30"	2	20
G20-2	END ROAD WORK	36" x 18"	2	9
W20-1	ROAD WORK AHEAD	36" x 36"	2	18
W20-4	ONE LANE ROAD	36" x 36"	4	36
W13-1	25 MPH advisory speed plaque	24" x 24"	4	16
W20-7a	Flagger (symbol)	36" x 36"	4	36
W16-2	500 FT supplemental plaque	24" x 18"	4	12
G20-1	ROAD WORK NEXT 15 MILES	36" x 18"	2	9
G20-4	PILOT CAR FOLLOW ME	36" x 18"	1	5
W8-12	NO CENTER STRIPE	36" x 36"	4	36
R4-1	DO NOT PASS	24" x 30"	30	150
R8-3	NO PARKING	12" x 18"	2	3
SPECIAL 1	ROAD CLOSED AT DEE WRIGHT OBSERVATORY	60" x 30"	1	12.5
SPECIAL 2	NO RV'S - TRAILERS BEYOND SNOW GATE 8 MI. AHEAD	66" x 30"	1	13.75
TOTAL			69	455.75

TEMPORARY TRAFFIC CONTROL, PILOT CAR ITEM 63506-0600

QUANTITY (hour)
50 △1

TEMPORARY TRAFFIC CONTROL, TRAFFIC AND SAFETY SUPERVISOR ITEM 63507-0700

QUANTITY (day)
90

TEMPORARY TRAFFIC CONTROL, PORTABLE CHANGEABLE MESSAGE SIGN ITEM 63507-0800

APPROXIMATE LOCATION	QUANTITY (day)
Hwy. 126 1,000' west of 242 Jct.	90
Hwy. 126 1,000' northeast of 242 Jct.	90
Hwy. 242 1,000' east of Sisters	50
Hwy. 242 1,000' M.P. 84.1	90
TOTAL	320

TEMPORARY TRAFFIC CONTROL, FLAGGER ITEM 63509-1000

QUANTITY (fix hr. rate)
250 △1

NOTE:

1. Install signs according to the current edition of the "Manual On Uniform Traffic Control Device (MUTCD)" and Std. 635-14.
2. Provide additional signs required to meet field conditions.
3. Install temporary traffic control advance signing according to standard 635-1 when the road is open to public traffic

△1 Revised by Amendment 1.

TABULATION OF TEMPORARY TRAFFIC CONTROL QUANTITIES

I:\Project_Dev\Oregon\McKenzie\ORPFH 22(14) McKenzie Highway\Plans\Sheets\Ammendments\or2214na.dgn _DATE_ + " _FILE_ Designed by: T. BENNETT 3/2008 Checked by: M. HOHBACH 3/2008

STATE	PROJECT	SHEET NUMBER
OR	PFH 22(14)	I.4

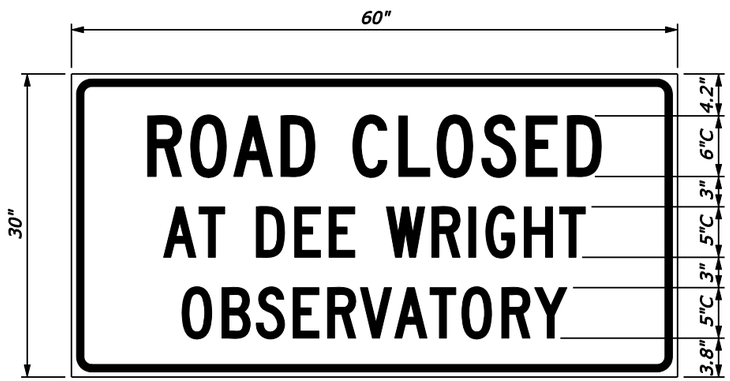

SPECIAL SIGN 1 DETAIL

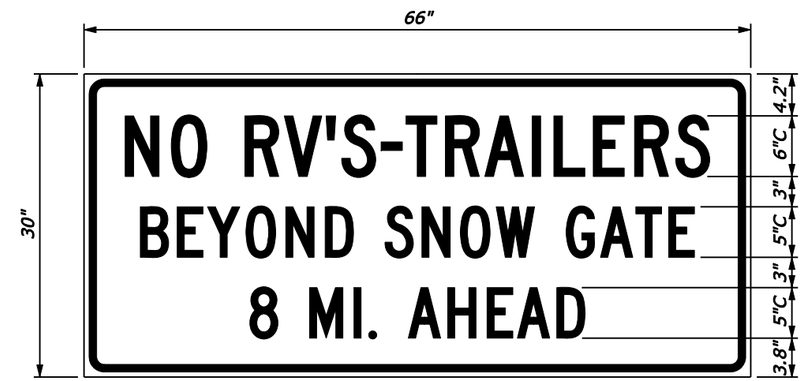

SPECIAL SIGN 2 DETAIL

△1 NOTE:
1. Signs shall be black-on-orange.

△1 Revised by Amendment 1.

TEMPORARY SIGN DETAILS

I:\Project_Dev\Oregon\McKenzie\ORPFH 22(14) McKenzie Highway\Plans\Sheets\Ammendments\or2214nd.dgn _DATE_" + "_FILE_ Designed by: T. BENNETT 3/2008 Checked by: M. HOHBACH 3/2008

STATE	PROJECT	SHEET NUMBER
OR	PFH 22(14)	J.2

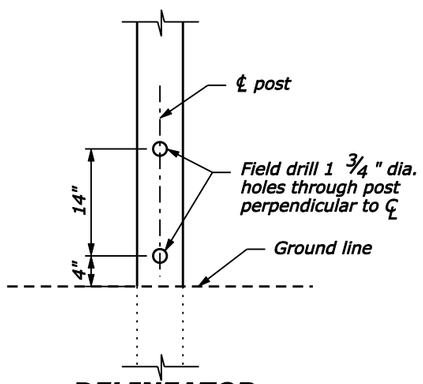

DELINEATOR BREAKAWAY DETAIL

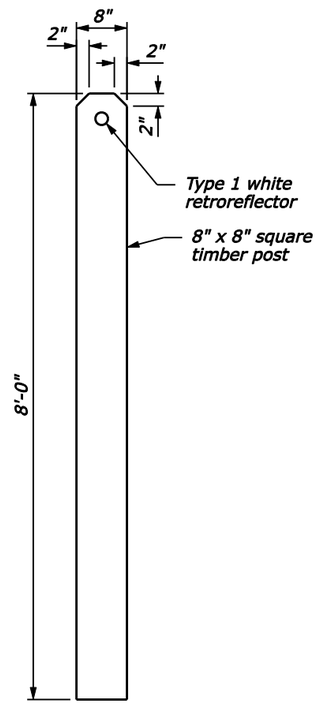

TYPE 1 DELINEATOR DETAIL △1

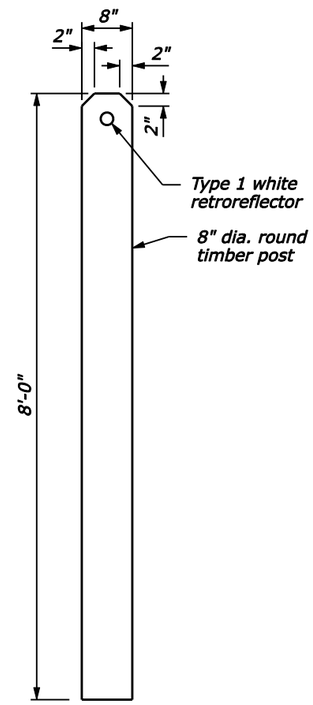

TYPE 2 DELINEATOR DETAIL △1

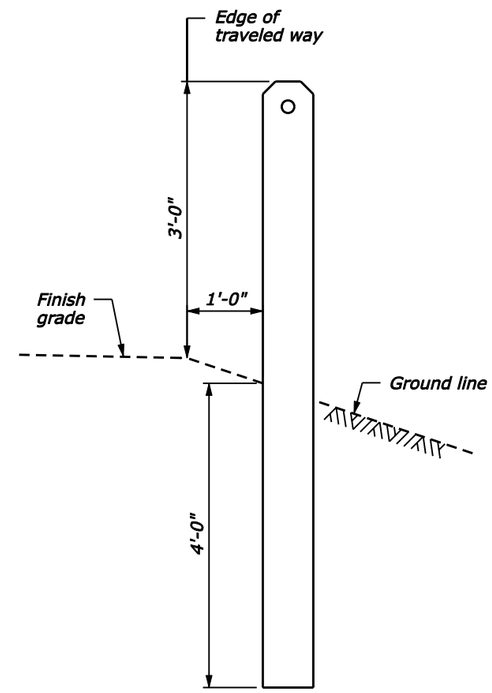

DELINEATOR INSTALLATION DETAIL △1

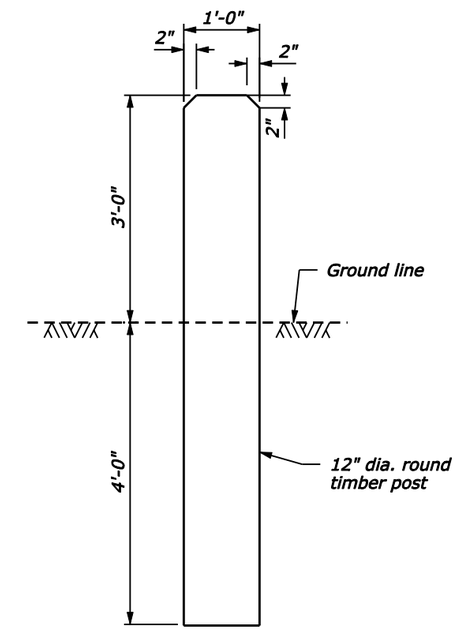

BOLLARD DETAIL △1

△1 Revised by Amendment 1.

DELINEATOR AND BOLLARD DETAILS

I:\Project_Dev\Oregon\McKenzie\ORPFH 22(14) McKenzie Highway\Plans\Sheets\Ammendments\or22140c.dgn _DATE_" + "_FILE_ Designed by: T. BENNETT 3/2008 Checked by: M. HOHBACH 3/2008