NPS NO.	REG	STATE	PROJECT	SHEET NO.
432 / 41909	MW	IA	HEHO 10(1),100(1)	A1

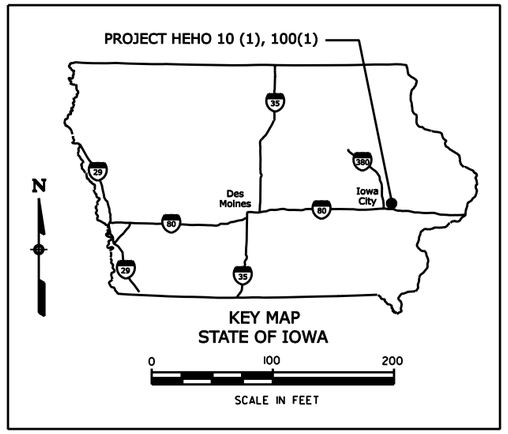

U.S. DEPARTMENT OF THE INTERIOR

NATIONAL PARK SERVICE

HERBERT HOOVER NATIONAL PARK

HERBERT HOOVER NATIONAL HISTORIC SITE

PLANS FOR PROPOSED

PARKSIDE DRIVE & SECOND STREET BRIDGES

PROJECT HEHO 10(1), 100(1)

REPAIR OF THE PARKSIDE DRIVE BRIDGE AND SECOND STREET BRIDGE

INDEX TO SHEETS

SHEET NO	DESCRIPTION
A1	Title Sheet
A2	Symbols And Abbreviations
A3	Location Map
B1	Typical Section
C1	Tabulation of Quantities
C2-C3	Temporary Sign Schedule
C4	Miscellaneous Schedules and Summaries
D1-D4	Plans
R1-R17	Structure Plans
S1-S12	Standards And Details
U1	Drainage Cross Sections

DESCRIPTION OF PROJECT

IMPROVEMENT:

PARKSIDE DRIVE:
Hydrodemolish Parkside Drive Bridge deck and construct concrete overlay, replace sidewalk at the southeast and northeast bridge approaches, construct southwest concrete sidewalk extension, clean and paint existing bridge railing, reconstruct settled sections along Parkside Drive, drainage, and other misc. work

SECOND STREET BRIDGE:
Replace Bridge expansion joints seals and install railing end caps at the southeast and northeast corners

PROJECT LENGTH: 0.32 Miles

ROAD: Concrete pavement
24 ft width plus shoulders

BRIDGE: Cast-in-place Concrete Deck

PARKSIDE DRIVE BRIDGE	SECOND STREET BRIDGE
Structure No. 6470-004P	Structure No. 6470-005P
Curb-to-curb = 40'	Curb-to-curb = 32'
Sidewalk = 4.5'	Sidewalk = 4.0'

DESIGN DESIGNATION:

PARKSIDE DRIVE BRIDGE Structure No. 6470-004P		SECOND STREET BRIDGE Structure No. 6470-005P	
ADT (2008)	4430	ADT (2008)	230
ADT (2028)	5100	ADT (2028)	265
DHV	460	DHV	25
D	50/50	D	50/50
%Truck	1%	%Truck	1%
V (MPH)	25	V (MPH)	25
C/A	None	C/A	None
e(max)	8%	e(max)	8%

CEDAR COUNTY
IOWA

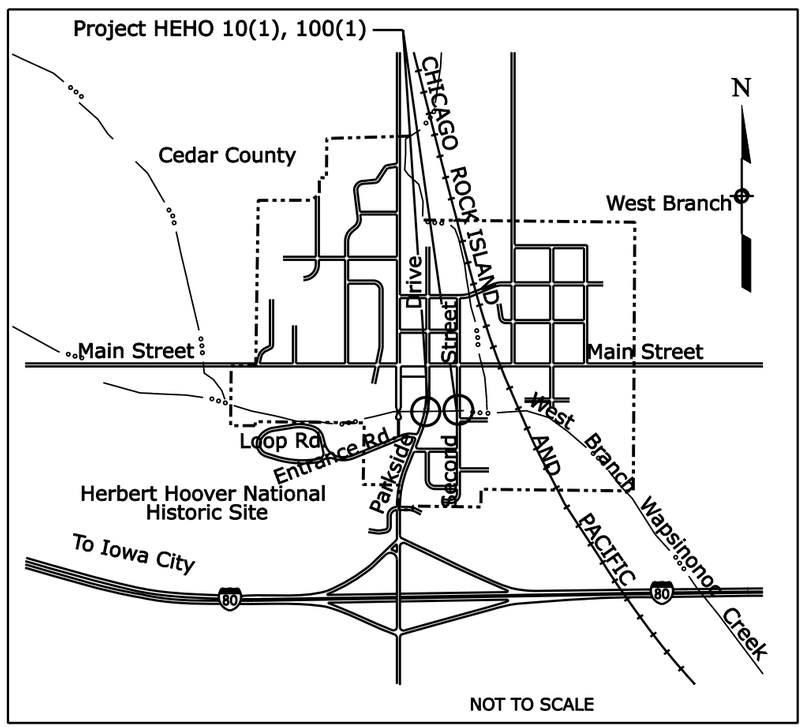

SPECIFICATIONS:

"Standard Specifications for Construction of Roads and Bridges on Federal Highway Projects", FP-03 U.S.Customary Units.

PLANS PREPARED BY

U.S. Department of Transportation
Federal Highway Administration

EASTERN FEDERAL LANDS HIGHWAY DIVISION
STERLING, VIRGINIA
JANUARY 2008

Call before you DIG, see below:

IOWA ONE CALL 1.800.292.8989
Call Before You Dig! 1.800.292.8989
Call the toll-free number at least 48 hours prior to ALL excavations in Iowa.

Project Manager	Lead Designer	Bridge Design Team Leader
Arvind Patel	Sidney Taylor	Mark Clabaugh

PMIS NO. 93437

2/26/2008 11:13:05 AM \\Projects\heho\01\001\proj_dev\CADD\Ab-heho01\100(1)_ttl.dgn

...\A01-heho10(1)100(1) ttl.dgn 2/26/2008 11:13:09 AM

REG	STATE	PROJECT	SHEET NO.
MW	IA	HEHO 10(1), 100(1)	A2

Abutment	Abut.
Aggregate	aggr.
Ahead	AH
Alternate	alt.
Average daily traffic	ADT
Back	BK
Balance point	BP
Bearing	brg.
Begining	beg.
Bench mark	BM
Centerline	
Center to center	cc, c-c or c. to c.
Centers	ctrs.
Clear	clr.
Column	col.
Connection	conn.
Construction joint	Constr. jt.
Continuous	cont.
Corrugated metal pipe	CMP
Culvert	culv.
Curve centeral angle (spiral curve transitions)	Δ_c
Curve total angle (curve delta or deflection)	Δ
Design hourly volume	DHV
Design speed	V
Diagonal	diag.
Diameter	D, dia., or
Diaphragm	diaph.
Distance	dist.
Drawing(s)	dwg(s), or drwg(s)
Drop Inlet	DI
East	E
Edge of pavement	EP or EOP
Elevation	elev.
Elevation with number	El. 94.161 [El. 94.16]
Embankment	emb.
End section	ES
Equation	EQ or eq.
Excavation	exc.
Expansion joint	exp. jt.
Finish	fin.
Flange	flg.
Footing	ftg.
Galvanized	galv.
Gage(gauge)	ga.
Headwall	hdwl.
Hexagon	hex.
High water	HW
Inside diameter	ID
Joint	jt.
Lamination	lam.
Latitude	lat.
Left	lt., Lt. or LT
Length of curve(simple curve)	L
Length of curve (spiral curve transision)	Lc
Length of spiral	Ls
Longitudinal(longitude)	long.
Low water	LW

Mainline	M.L.
Material	mati.
Maximum	max.
Mile[Kilometer] post	M.P[K.P.]
Minimum	min.
Monument	mon.
Mechanically stabilized embankment	MSE
Original groung	OG
Out to out	o. to o.
Outside diameter	OD
On centers	o. c.
Normal crown	NC or NCR
North	N
Pavement	pvmt.
Plate	pl.
Point of compound curve	PCC
Point of curve	PC
Point of curve to spiral	PCS or CS
Point of intersection	PI
Point of spiral to curve	PSC or SC
Point of spiral to reverse spiral	SRS
Point of spiral to tangent	PST or ST
Point of tangent	PT
Point of tangent to spiral	PS or TS
Point on curve	POC
Point on spiral	POS
Point on tangent	POT
Radius	R
Range	R.
Reinforcement (reinforced)	reinf.
Required	reqd.
Right	Rt., rt.or RT
Right-of-way	R/W
Roadway	Rdwy.
Route	Rte.
Section	Sec.
South	S
Spacing, spaces or spaced	spa.
Spiral central angle	s
Standard	std.
Station	Sta.
Stiffener	stiff.
Stringer	stgr.
Structure	struc.
Superelevation rate	e
Symmetrical	sym.
Tangent distance (tangent length)	T
Tangent distance (spiral curve transision)	Ts
Temporary benchmark	TBM
Temporary construction easement	TCE
Thread	thd.
Township	T.
Typical	typ.
Vehicle per hour	vph
Vertical point of intersection	VPI
West	W

NATIONAL BOUNDARY
STATE BOUNDARY
COUNTY BOUNDARY
CITY BOUNDARY
TOWNSHIP or RANGE LINE
SECTION LINE
¼ SECTION LINE
1/16 SECTION LINE
NATIONAL PARK or FOREST BOUNDARY
PROPERTY LINE
TRAVERSE POINT (Horizontal & Vertical) Top of Triangle Points North — T-45 2,645.9
TRAVERSE POINT (Horizontal) — T-3
BRASS CAP
STEEL PIN
HUB & TACK
SPOT ELEVATION — x 99.9
COORDINATE GRID TICK

	EXISTING	PROPOSED
RIGHT-OF-WAY LINE	R/W	R/W
RIGHT-OF-WAY LINE with MONUMENT	R/W	R/W
SECTION CORNER	FOUND 36 31 1 6	PROJECTED 36 31 1 6
¼ SECTION CORNER	15 22	15 22
1/16 SECTION		
PROPERTY CORNER		No Symbol
PARCEL NUMBER	No Symbol	400
EASEMENT (Permanent - Construction)	P/E	C/E
ROUTE NUMBERS	26 INTERSTATE; 25 U.S.; 694 STATE	

SLOPE STAKE — TOP OF CUT; TOE OF FILL; TRANSITION
ROADWAY, EXISTING
RAILROAD — SINGLE TRACK; MULTIPLE TRACK
TRAIL
INTERMITTENT DRAINAGE/ SMALL CREEK
SPRING
LARGE CREEK/RIVER
LAKE, POND or RESERVOIR; MARSHLAND
PAVEMENT REMOVAL/ROADWAY OBLITERATION
FULL DEPTH PAVEMENT
SIDEWALK ASPHALT/CONCRETE
MILL AND OVERLAY
OVERLAY
SILT FENCE — SF
DIVERSION BERM — DB
DIVERSION CHANNEL
CHECK DAM
RIPRAP/CULVERT RIPRAP
BORING LOCATION — B-1
TEST PIT — TP-1
NORTH ARROW — N
MATERIAL SOURCE

AREA PATTERN

	EXISTING	PROPOSED
FENCE	x x	xx xx
GATE with FENCE	x x	xx xx
CATTLEGUARD		
GUARDRAIL		
MEDIAN & SIDE (CONCRETE) BARRIER		
SIGNS — POST MOUNTED		
SIGNS — PORTABLE	No Symbol	
RETAINING WALL		wall face
OVERHEAD(POWER POLE) UTILITIES P=Electrical for transmission line E=Electrical for distribution line T=Telephone, E&T=Joint Electrical and Telephone FO=Fibre optics	P	P
SUPPORT POLE with ANCHOR		
TELEPHONE BOOTH or PEDESTAL	TB or TP	TB or TP
STREET LIGHT	or	or
UNDERGROUND UTILITIES G=gas, O=oil, P=power, SA=sanitary sewer, SS=storm sewer, T=telephone, W=water E=electrical, FO=fibre optics	W	W
BRIDGE		
PIPE CULVERT (arrow shows flow)		
PIPE CULVERT with END SECTION		
PIPE CULVERT with HEADWALL		
CULVERT with DROP INLET		
BOX CULVERT		
UNDERDRAIN	UD	UD
BUILDING		
TREELINE; TREE		

PROJECT SPECIFIC SYMBOLS AND ABBREVIATIONS:-

TYPE III BARRICADE

DRUMS

U.S. DEPARTMENT OF TRANSPORTATION
FEDERAL HIGHWAY ADMINISTRATION
EASTERN FEDERAL LANDS HIGHWAY DIVISION
STERLING, VIRGINIA

HERBERT HOOVER NATIONAL HISTORIC SITE

SYMBOLS AND ABBREVIATIONS

2/25/2008 8:55:44 AM W:\Projects\heho\10\100\proj_dev\CADD\A02-heho10\100\1_sym.dgn

REG	STATE	PROJECT	SHEET NO.
MW	IA	HEHO 10(1), 100(1)	A3

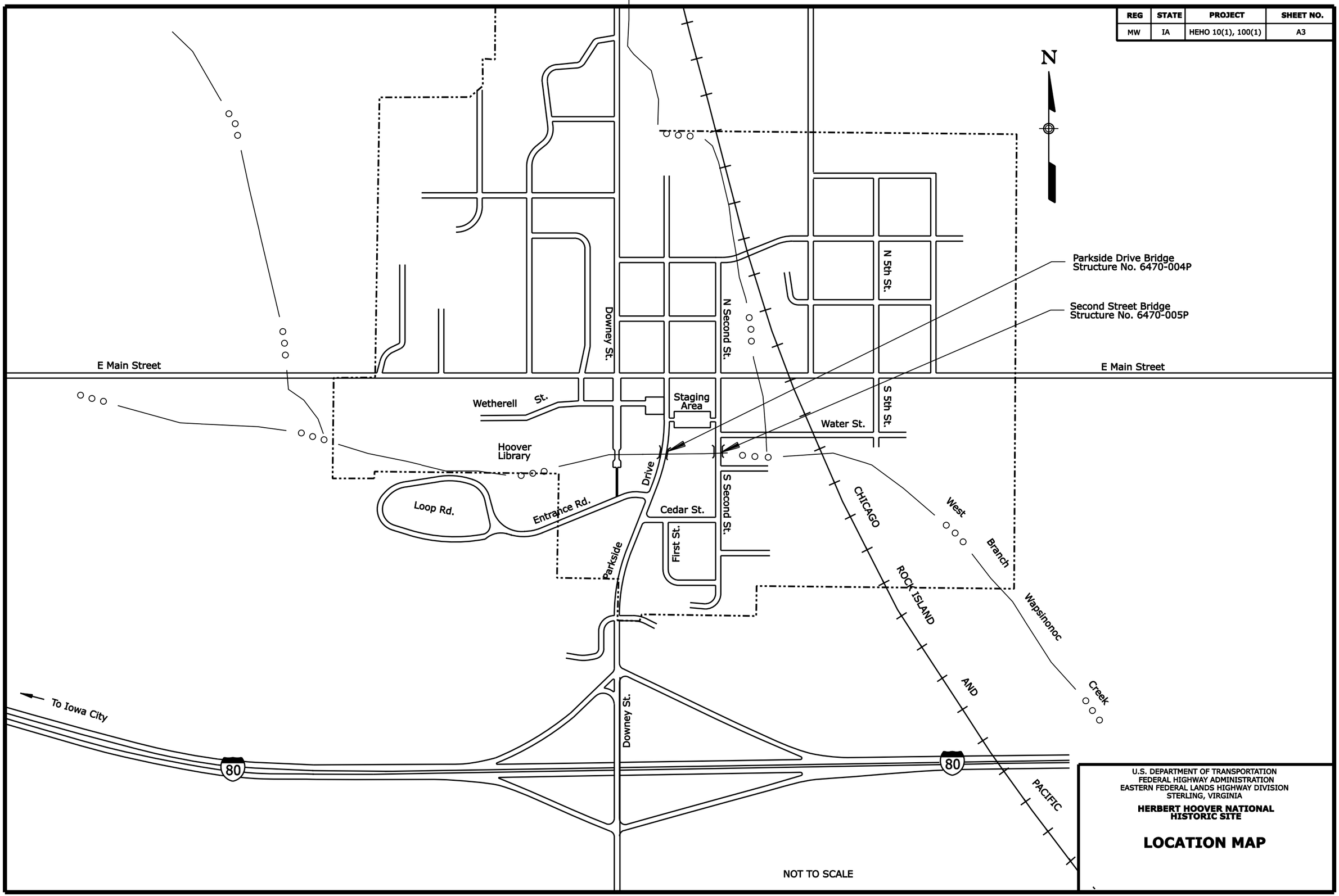

U.S. DEPARTMENT OF TRANSPORTATION
FEDERAL HIGHWAY ADMINISTRATION
EASTERN FEDERAL LANDS HIGHWAY DIVISION
STERLING, VIRGINIA

HERBERT HOOVER NATIONAL HISTORIC SITE

LOCATION MAP

1/28/2008 8:44:35 AM M:\Projects\heho\01\001\proj_dev\CADD\A02-heho01\100\1_loc.dgn

REG	STATE	PROJECT	SHEET NO.
MW	IA	HEHO 10(1), 100(1)	B1

NOTES:

1. Matching existing roadway cross slope.
2. Provide aggregate topsoil 2" min. depth and turf establishment for all disturbed areas in accordance with Sections 624 and 625.
3. The locations of slab replacement are approximate. Final location and area of slab replacement will be determined in the field.

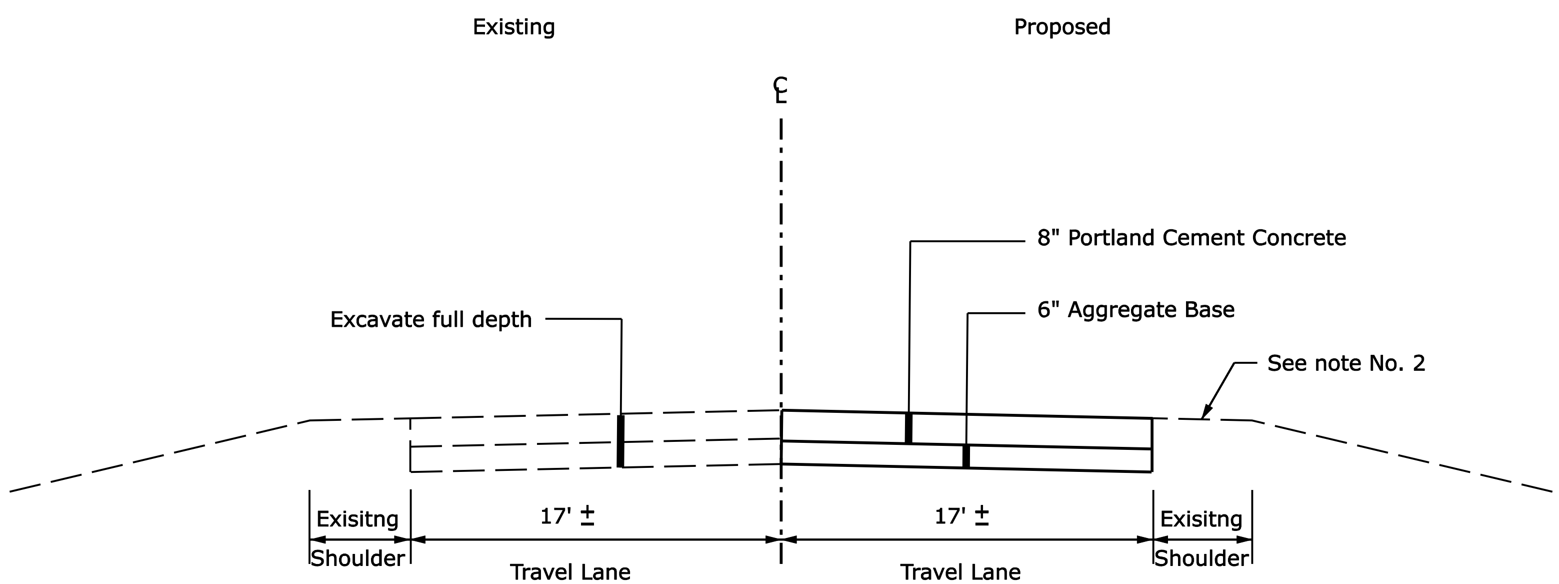

Slab Repair Full Depth
Parkside Drive

NOT TO SCALE

U.S. DEPARTMENT OF TRANSPORTATION
FEDERAL HIGHWAY ADMINISTRATION
EASTERN FEDERAL LANDS HIGHWAY DIVISION
STERLING, VIRGINIA

HERBERT HOOVER NATIONAL HISTORIC SITE

TYPICAL SECTION

PARKSIDE DRIVE

$$$$DATE$$$$ $TIME$ $$$$DGN$$

REG	STATE	PROJECT	SHEET NO.
MW	IA	HEHO 10(1), 100(1)	C1

PLAN SHEET SECTION -------->>					ESTIMATED QUANTITIES	
ITEM	DESCRIPTION	UNIT			PLAN	BID SCHEDULE
15101-0000	MOBILIZATION	LPSM			ALL	ALL
15201-0000	CONSTRUCTION SURVEY AND STAKING	LPSM			ALL	ALL
15401-0000	CONTRACTOR TESTING	LPSM			ALL	ALL
15705-0100	SOIL EROSION CONTROL, SILT FENCE	LNFT	500		500	500
15706-1200	SOIL EROSION CONTROL, INLET PROTECTION TYPE B	EACH	2		2	2
20303-0300	REMOVAL OF CONCRETE	SQYD	135		135	135
20303-3200	REMOVAL OF SIDEWALK, CONCRETE	SQYD	12		12	12
20315-0000	SAWCUTTING PAVEMENT	LNFT	300		300	300
20401-0000	ROADWAY EXCAVATION	CUYD	54		54	54
25101-3000	PLACED RIPRAP, CLASS 3	CUYD	4		4	4
30102-2000	AGGREGATE BASE GRADING C OR D, 6-INCH DEPTH	SQYD	135		135	135
30502-0300	AGGREGATE-TOPSOIL COURSE, 2-INCH DEPTH	SQYD	30		30	30
50101-0900	REINFORCED RIGID PAVEMENT, 8-INCH DEPTH, TYPE C SMOOTHNESS	SQYD	135		135	135
55201-0200	STRUCTURAL CONCRETE, CLASS A (AE) , FOR BRIDGE SIDEWALK EXTENSION	CUYD	2		2	2
55202-4000	STRUCTURAL CONCRETE, FOR OVERLAY (CLASS HPC(O))	SQYD	135		135	135
55205-0000	REPAIR CONCRETE , (PARTIAL DEPTH)	SQYD	2		2	2
55211-0000	CLEAN AND RESEAL JOINTS	LNFT	216		216	216
55601-0100	BRIDGE RAILING, ALUMINUM (RAIL END CAP)	LNFT	2		2	2
56001-0000	REMOVAL OF CONCRETE BY HYDRODEMOLITION	SQYD	135		135	135
56301-2000	PAINTING, STEEL STRUCTURE (Parkside Drive Bridge Railing)	LPSM			ALL	ALL
60201-0600	18-INCH PIPE CULVERT	LNFT	60		60	60
60210-0600	END SECTION FOR 18-INCH PIPE CULVERT	EACH	2		2	2
60403-1200	INLET, TYPE 5A	EACH	2		2	2
61501-0100	SIDEWALK, CONCRETE	SQYD	12		12	12
62401-0100	FURNISHING AND PLACING TOPSOIL, 2-INCH DEPTH	SQYD	10		10	10
62502-0000	TURF ESTABLISHMENT	SQYD	30		30	30
63401-0300	PAVEMENT MARKINGS, TYPE B, SOLID	LNFT	3500		3500	3,500
63502-0600	TEMPORARY TRAFFIC CONTROL, BARRICADE TYPE 3	EACH	10		10	10
63502-1300	TEMPORARY TRAFFIC CONTROL, DRUM	EACH	100		100	100
63502-1500	TEMPORARY TRAFFIC CONTROL, WARNING LIGHT TYPE A	EACH	100		100	100
63504-1000	TEMPORARY TRAFFIC CONTROL, CONSTRUCTION SIGN	SQFT	330		330	330
63506-0500	TEMPORARY TRAFFIC CONTROL, FLAGGER	HOUR	56		56	56
63708-0000	CELLULAR PHONE SERVICE	MO	3		3	3
64502-0000	LOCATE UTILITIES	EACH	2		2	2

U.S. DEPARTMENT OF TRANSPORTATION
FEDERAL HIGHWAY ADMINISTRATION
EASTERN FEDERAL LANDS HIGHWAY DIVISION
STERLING, VIRGINIA

HERBERT HOOVER NATIONAL HISTORIC SITE

TABULATION OF QUANTITIES

2/25/2008 7:21:57 AM M:\Projects\heho\01\100\1\proj_dev\CADD\C01-heho01\100\1_qnt.dgn

REG	STATE	PROJECT	SHEET NO.
MW	IA	HEHO 10(1), 100(1)	C2

Text No.	Sign Text	LOCATION		PANEL SIZE						TEXT SIZE				Color Combination	Quantity	Total Area (sq ft)	Remarks
		Station	Side	Width (in.)	Height (in.)	Area (sq ft)	Corner Radii (in.)	Border Width (in.)	Margin Width (in.)	Numbers (in.)	Upper Case (in.)	Lower Case (in.)	Series				
G20-2a	END ROAD WORK			36	18	4.5	←			See	Note 2		→	Black on Orange	3	13.5	
R11-2	ROAD CLOSED			48	30	10	←			See	Note 2		→	Black on White	6	60	Mount on Type III Barricade
W5-1	ROAD NARROWS			36	36	9	←			See	Note 2		→	Black on Orange	2	18	
W9-3	CENTER LANE CLOSED AHEAD			36	36	9	←			See	Note 2		→	Black on Orange	2	18	
W13-1	10 M. P. H.			24	24	4	←			See	Note 2		→	Black on Orange	7	28	Mount with: Sign Nos. W9-3, W20-1, W20-4 and W20-5
W16-2	300 FEET			24	18	3	←			See	Note 2		→	Black on White	5	15	Mount with: Sign No. W20-7a
														TOTAL THIS SHEET	25	152.5	

NOTES:

1. Supports shall be in accordance with Standard Detail 635-14.
2. See "Manual on Uniform Traffic Control Devices" and "Standard Highway Signs" for dimensions.
3. See Standard Detail 635-6.
4. See Traffic Control Plan.

U.S. DEPARTMENT OF TRANSPORTATION
FEDERAL HIGHWAY ADMINISTRATION
EASTERN FEDERAL LANDS HIGHWAY DIVISION
STERLING, VIRGINIA

HERBERT HOOVER NATIONAL HISTORIC SITE

CONSTRUCTION SIGN SCHEDULE

2/25/2008 7:24:07 AM M:\Projects\heho\01\100(1)\proj_dev\CADD\C02-heho01\100(1)_css.dgn

REG	STATE	PROJECT	SHEET NO.
MW	IA	HEHO 10(1), 100(1)	C3

Text No.	Sign Text	LOCATION		PANEL SIZE						TEXT SIZE				Color Combination	Quantity	Total Area (sq ft)	Remarks
		Station	Side	Width (in.)	Height (in.)	Area (sq ft)	Corner Radii (in.)	Border Width (in.)	Margin Width (in.)	Numbers (in.)	Upper Case (in.)	Lower Case (in.)	Series				
W20-1 MOD.				36	36	9	←			See	Note 2		→	Black on Orange	4	36	
W20-1				36	36	9	←			See	Note 2		→	Black on Orange	3	27	
W20-4				36	36	9	←			See	Note 2		→	Black on Orange	5	45	
W20-5R				36	36	9	←			See	Note 2		→	Black on Orange	2	18	
W20-7a				36	36	9	←			See	Note 2		→	Black on Orange	5	45	
														Total this sheet	19	171	
														Total	46	323.5	
														Rounded Total		330	

NOTES:

1. Supports shall be in accordance with Standard 635-14.
2. See "Manual on Uniform Traffic Control Devices" and "Standard Highway Signs" for dimensions.
3. See Standard Detail 635-6.
4. See Traffic Control Plan.

U.S. DEPARTMENT OF TRANSPORTATION
FEDERAL HIGHWAY ADMINISTRATION
EASTERN FEDERAL LANDS HIGHWAY DIVISION
STERLING, VIRGINIA

HERBERT HOOVER NATIONAL HISTORIC SITE

CONSTRUCTION SIGN SCHEDULE

2/25/2008 7:15:32 AM M:\Projects\heho\01\001\proj_dev\CADD\C02-heho01\001_css.dgn

REG	STATE	PROJECT	SHEET NO.
MW	IA	HEHO 10(1), 100(1)	C4

PERMANENT TRAFFIC MARKINGS

LOCATION	STATION TO STATION	PAVEMENT MARKINGS, TYPE B, SOLID (See detail for Centerline striping)	
		LINEAR FEET	
		WHITE/BROKEN	YELLOW(SOLID)
Parkside Drive	See note	70 (Right Turn Lane) Assumed	1690 (Center) 1690 (Center) Assumed
		70	3380
		TOTAL	3450

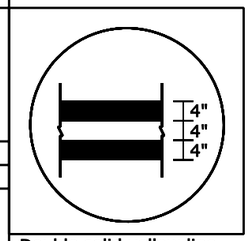

Double solid yellow line Detail

Re-stripe the Parkside Drive from the Parks boundary to Main Street and the right turn lane broken striping from the Bridge to the parking area as approved by the CO.

TEMPORARY INLET PROTECTION		
Location	Type	Quantity (Each)
Parkside Drive Bridge (Left and Right of Bridge)	A	
Left		1
Right		1

SILT FENCE	
LOCATION	LENGTH (LNFT)
Parkside Drive:	
At Gas Station	
Left	75
Right	75
North of Gas Station	
Left	75
Right	75
Under Parkside Drive Bridge	200
TOTAL	500

See plan sheets D1-D3 for locations

DRAINAGE SUMMARY			
Location	60201-0600 18" Pipe Culvert	60210-0600 End Section for 18" Pipe Culvert	60403-1200 Inlet, Type 5A
Parkside Drive Bridge			
	LNFT	EACH	EACH
Left Right	26 26	1 1	1 1
As Required	8		
Project Total	60	2	2

U.S. DEPARTMENT OF TRANSPORTATION
FEDERAL HIGHWAY ADMINISTRATION
EASTERN FEDERAL LANDS HIGHWAY DIVISION
STERLING, VIRGINIA

HERBERT HOOVER NATIONAL HISTORIC SITE

MISCELLANEOUS SCHEDULES AND SUMMARIES

1/28/2008 8:52:55 AM M:\Projects\heho\01\001\proj_dir\CADD\C04-heho01\100\1_misc.dgn

REG	STATE	PROJECT	SHEET NO.
MW	IA	HEHO 10(1), 100(1)	D1

NOTES:

1. Provide aggregate topsoil 2" min. depth and tuf establishment for all disturbed areas in accordance with Sections 624 and 625.
2. Sawcut perimeter of repair area prior to excavation.
3. Use temporary traffic control single lane closure layout (with flagger) for the maintenance of traffic (see Standard 635-6).
4. Final location and spacing of signs and devices may be changed to fit field conditions as approved by the CO.
5. The location and size of slab replacements are approximate. Final location will be determined in the field as approved by the CO.
6. Place traffic control signage and devices in accordance with MUTCD Latest Edtion 2003.
7. Cover all conflicting signs with a material as specified in the SCRs and as approved by the CO.
8. Provide advance warning signs on the off ramp from I-80 for the maintenance of traffic (see Standard 635-6).

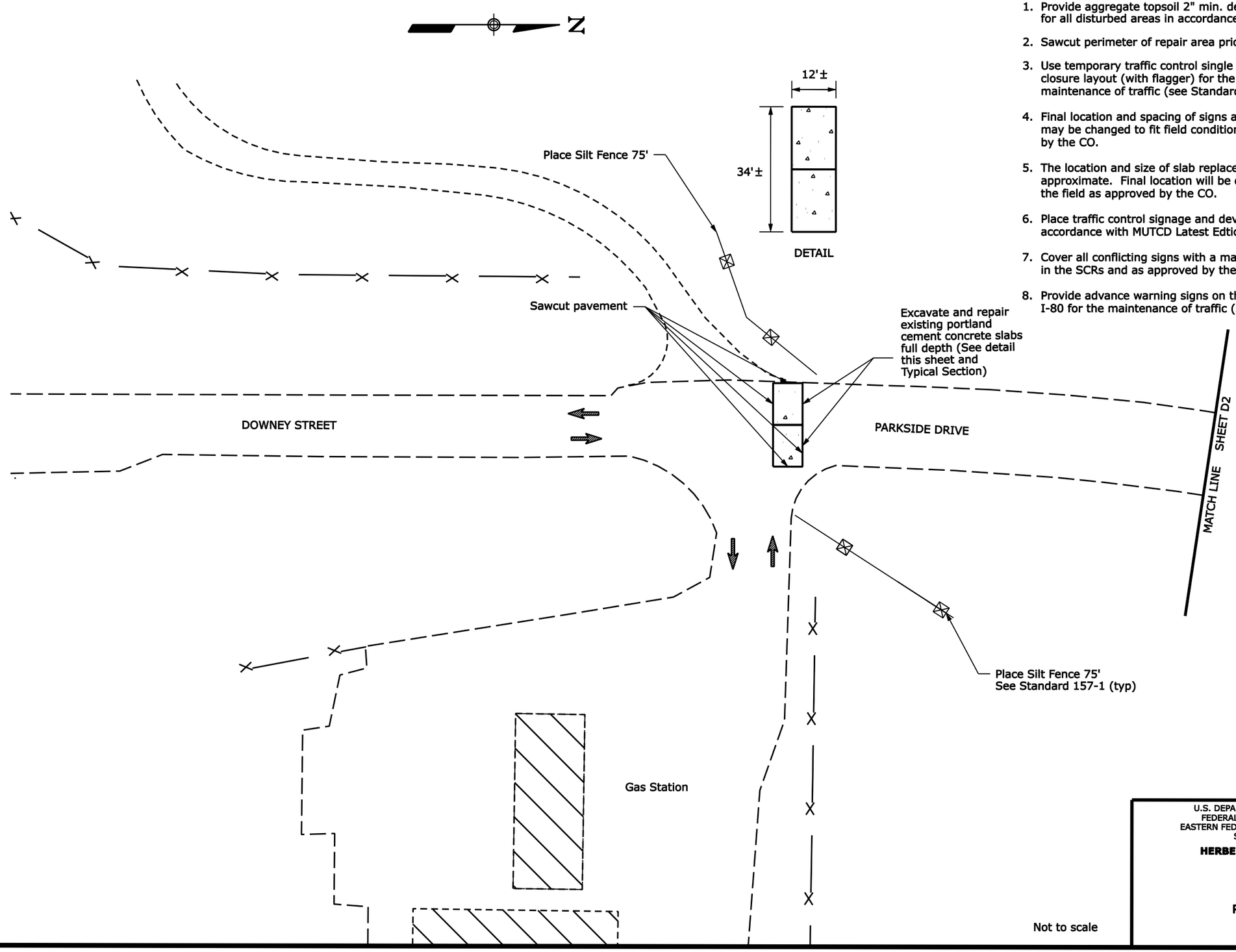

Not to scale

U.S. DEPARTMENT OF TRANSPORTATION
FEDERAL HIGHWAY ADMINISTRATION
EASTERN FEDERAL LANDS HIGHWAY DIVISION
STERLING, VIRGINIA

HERBERT HOOVER NATIONAL HISTORIC SITE

PLAN

PARKSIDE DRIVE

2/25/2008 8:27:46 AM M:\Projects\heho\D1\HD01\proj_dev\CADD\D0 heho01\HD01_pln.dgn

REG	STATE	PROJECT	SHEET NO.
MW	IA	HEHO 10(1), 100(1)	D2

NOTES:

1. Provide aggregate topsoil 2" min. depth and tuf establishment for all disturbed areas in accordance with Sections 624 and 625.
2. Sawcut perimeter of repair area prior to excavation.
3. Use temporary traffic control single lane closure layout (with flagger) for the maintenance of traffic (see Standard 635-6).
4. Final location and spacing of signs and devices may be changed to fit field conditions as approved by the CO.
5. The location and size of slab replacements are approximate. Final location will be determined in the field as approved by the CO.
6. Place traffic control signage and devices in accordance with MUTCD Latest Edtion 2003.
7. Cover all conflicting signs with a material as specified in the SCRs and as approved by the CO.

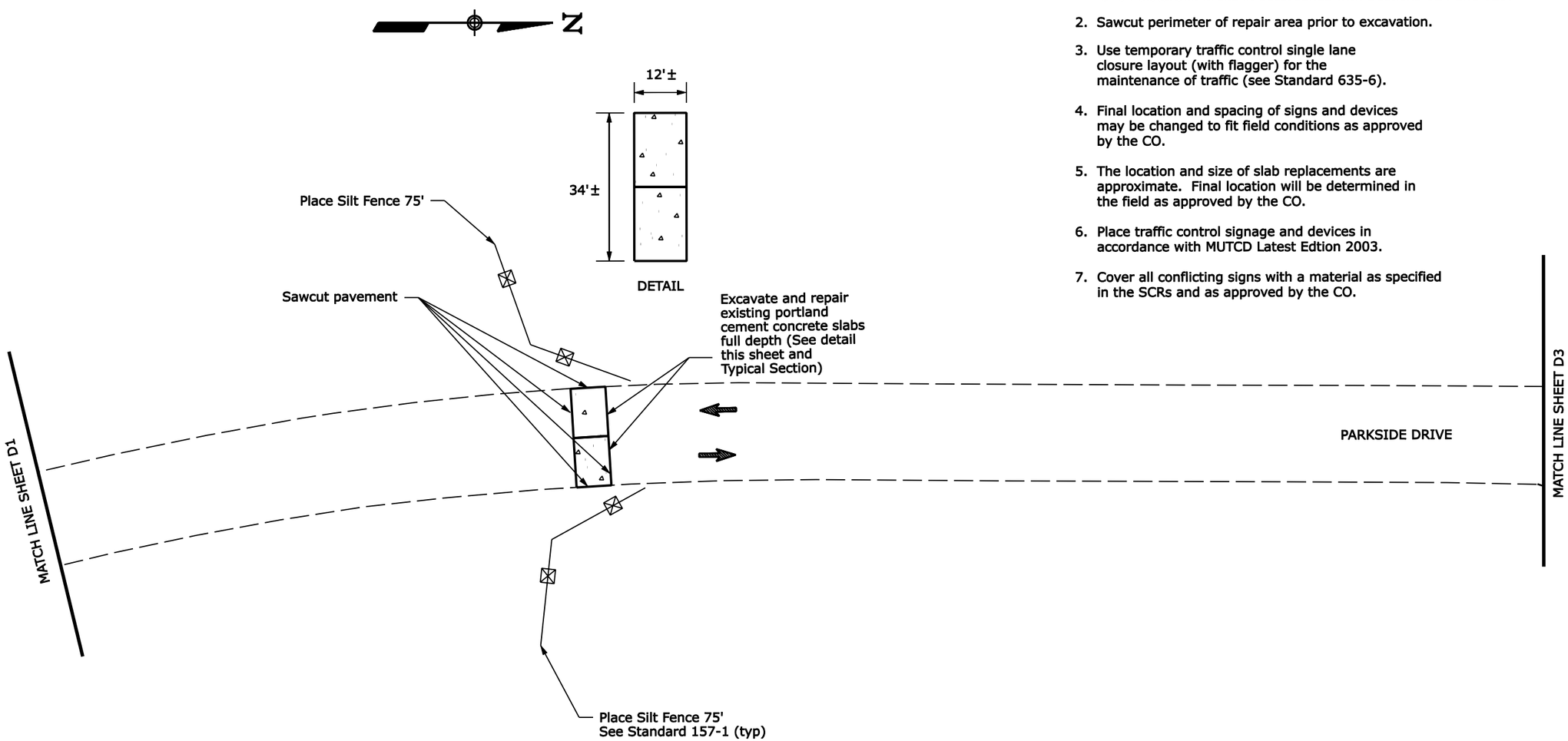

Not to scale

U.S. DEPARTMENT OF TRANSPORTATION
FEDERAL HIGHWAY ADMINISTRATION
EASTERN FEDERAL LANDS HIGHWAY DIVISION
STERLING, VIRGINIA

HERBERT HOOVER NATIONAL HISTORIC SITE

PLAN

PARKSIDE DRIVE

2/25/2008 8:28:33 AM W:\Projects\heho\001\001\proj_dev\CADD\D02 heho001\001_pln.dgn

REG	STATE	PROJECT	SHEET NO.
MW	IA	HEHO 10(1), 100(1)	D3

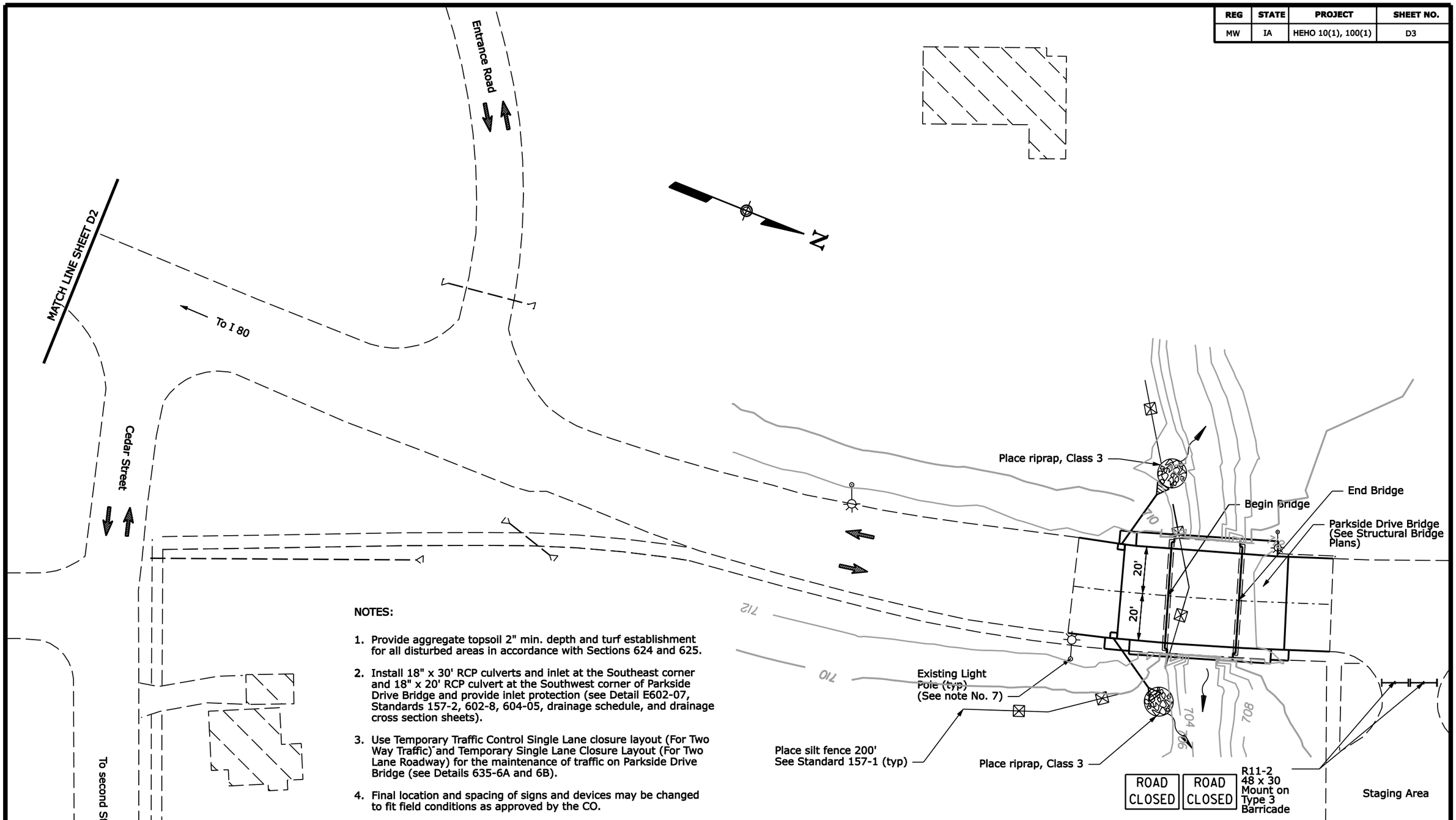

NOTES:

1. Provide aggregate topsoil 2" min. depth and turf establishment for all disturbed areas in accordance with Sections 624 and 625.
2. Install 18" x 30' RCP culverts and inlet at the Southeast corner and 18" x 20' RCP culvert at the Southwest corner of Parkside Drive Bridge and provide inlet protection (see Detail E602-07, Standards 157-2, 602-8, 604-05, drainage schedule, and drainage cross section sheets).
3. Use Temporary Traffic Control Single Lane closure layout (For Two Way Traffic) and Temporary Single Lane Closure Layout (For Two Lane Roadway) for the maintenance of traffic on Parkside Drive Bridge (see Details 635-6A and 6B).
4. Final location and spacing of signs and devices may be changed to fit field conditions as approved by the CO.
5. Place traffic control signage and devices in accordance with MUTCD Latest Edtion 2003.
6. Cover all conflicting signs with a material as specified in the SCRs and as approved by the CO.
7. Call (Iowa One Call) prior to any excavation to install 2(two) RCP Culverts and inlets at the Southeast and Southwest corners of Parkside Drive Bridge. Locate utility lines that run along side or near the Southeast and Southwest sides of the bridge. See Bridge Plans sheet R07 for the approximate locations of all utility lines.

Not to scale

U.S. DEPARTMENT OF TRANSPORTATION
FEDERAL HIGHWAY ADMINISTRATION
EASTERN FEDERAL LANDS HIGHWAY DIVISION
STERLING, VIRGINIA

HERBERT HOOVER NATIONAL HISTORIC SITE

PLAN

PARKSIDE DRIVE

2/25/2008 9:00:11 AM M:\Projects\heho\01\100\proj_dev\CADD\D03 heho01\100\1_pln.dgn

REG	STATE	PROJECT	SHEET NO.
MW	IA	HEHO 10(1), 100(1)	D4

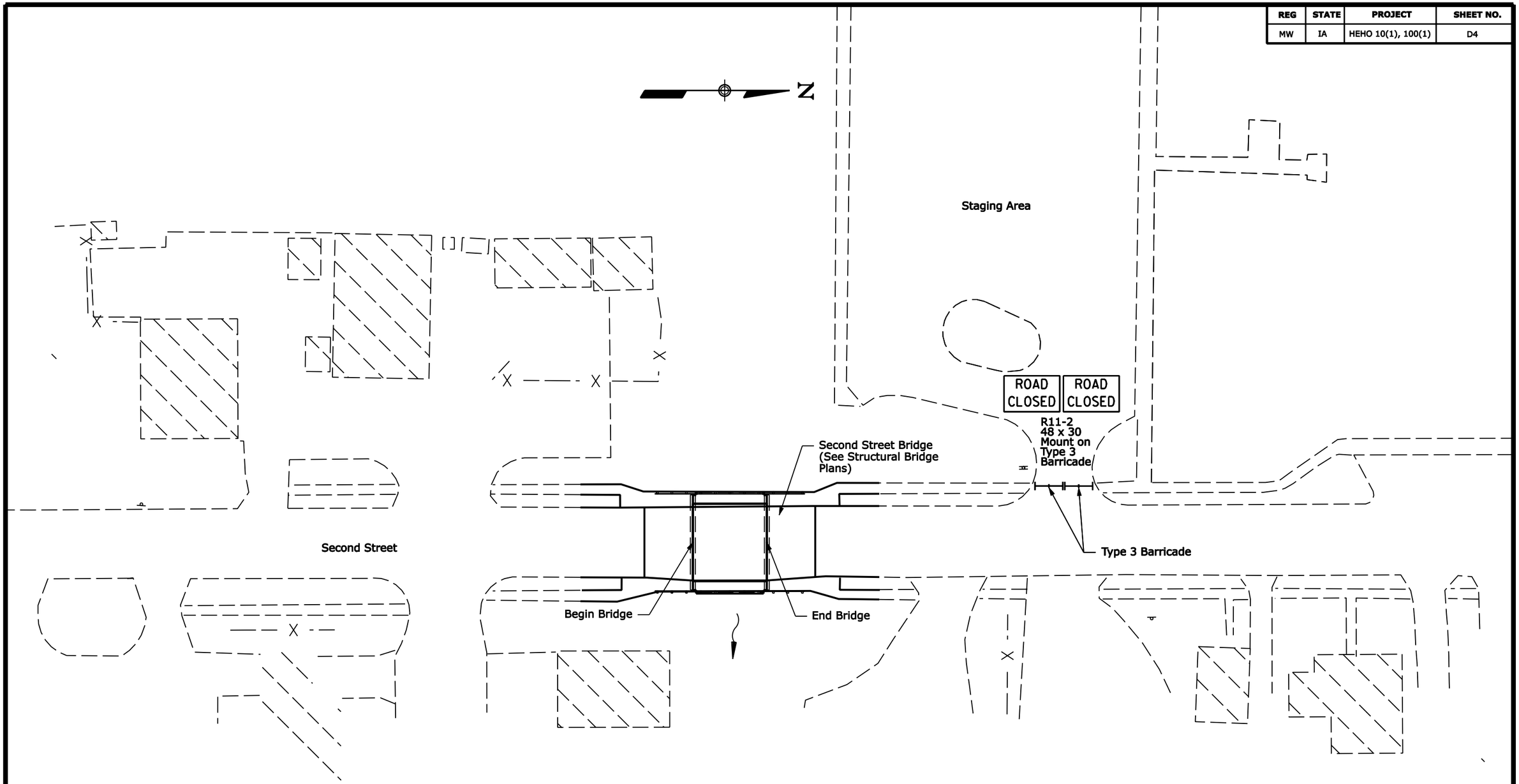

NOTES:

1. Use Temporary Traffic Control Single Lane closure layout (With Flagger) for the maintenance of traffic on Second Street Bridge (see Standard 635-6).
2. Final location and spacing of signs and devices may be changed to fit field conditions as approved by the CO.
3. Place traffic control signage and devices in accordance with MUTCD Latest Edtion 2003.
4. Cover all conflicting signs with a material as specified in the SCRs and as approved by the CO.

Not to scale

U.S. DEPARTMENT OF TRANSPORTATION
FEDERAL HIGHWAY ADMINISTRATION
EASTERN FEDERAL LANDS HIGHWAY DIVISION
STERLING, VIRGINIA

PLAN

SECOND STREET

1/28/2008 8:57:44 AM M:\Projects\heho\01\001\proj_dev\CADD\D04-heho01\001_pln.dgn

REGION	STATE	PROJECT	SHEET NO.
MW	IA	HEHO 10(1),100(1)	R01

GENERAL NOTES

SPECIFICATIONS:

CONSTRUCTION:

Standard Specifications for Construction of Roads and Bridges on Federal Highway Projects, FP-03 (U.S. Customary Units).

DESIGN:

AASHTO LRFD Bridge Design Specifications 2004, and Interim Specifications 2006.

DESIGN LOADING:

AASHTO HL-93

DESIGN STRESSES:

Class A (AE) Concrete:
f'c = 4,000 psi at 28 days
Class HPC (O) Concrete:
f'c = 5,000 psi at 28 days
Reinforcing steel:
fy = 60,000 psi

CONCRETE:

Furnish Class A(AE) concrete for sidewalk construction.
Furnish High Performance Concrete (HPC), class HPC(O), for bridge deck overlay.
Chamfer exposed corners 3/4" unless otherwise dimensioned.

REINFORCING STEEL:

Furnish reinforcing steel conforming to AASHTO M 31, Grade 60. Replace deteriorated reinforcement as directed by CO with new reinforcement using mechanical splices or lap splice 30 bar diameters with remaining reinforcement. Provide 2" cover for reinforcing steel unless otherwise noted.

UTILITIES:

Contact utility companies and locate all utilities prior to any work.

CONSTRUCTION SURVEY:

Provide CO existing top of deck elevations at centerline of structure and along each gutter line at 5 foot intervals. Verify all dimensions in the field prior to proceeding with construction and ordering any materials. Notify CO of any differences between site conditions and as-built drawings.

SHEET INDEX

SHEET NO.	DRAWING TITLE
1	General Notes and Sheet Index (Parkside Drive Bridge and Second Street Bridge)
2	Plan and Elevation (Parkside Drive Bridge)
3	Typical Section (Parkside Drive Bridge)
4	Bridge Deck Details (Parkside Drive Bridge)
5	Northeast and Southeast Concrete Sidewalk (Parkside Drive Bridge)
6	Southwest Bridge Sidewalk Extension (Parkside Drive Bridge)
7	As-Built sheet "Plan and Elevation" (Parkside Drive Bridge)
8	As-Built sheet "Abutment Details" (Parkside Drive Bridge)
9	As-Built sheet "Superstructure Details" (Parkside Drive Bridge)
10	As-Built sheet "Miscellaneous Details" (Parkside Drive Bridge)

SHEET INDEX

SHEET NO.	DRAWING TITLE
11	Plan and Elevation (Second Street Bridge)
12	Deck and Wall Joint Details (Second Street Bridge)
13	Approach Slab Repair (Second Street Bridge)
14	As-Built sheet "Frame" (Second Street Bridge)
15	As-Built sheet "Approach Slab and Wingwalls" sheet 1 (Second Street Bridge)
16	As-Built sheet "Approach Slab and Wingwalls" sheet 2 (Second Street Bridge)
17	As-Built sheet "Handrail" (Second Street Bridge)

Structure Numbers: Parkside Drive Bridge 6470-004P
Second Street Bridge 6470-005P

U.S. DEPARTMENT OF TRANSPORTATION
FEDERAL HIGHWAY ADMINISTRATION
EASTERN FEDERAL LANDS HIGHWAY DIVISION

HERBERT HOOVER NATIONAL HISTORIC SITE

PARKSIDE DRIVE BRIDGE AND SECOND STREET BRIDGE

GENERAL NOTES AND SHEET INDEX

NO.	DATE	BY	REVISIONS	NO.	DATE	BY	REVISIONS	DESIGNED BY	DRAWN BY	CHECKED BY	SCALE	PROJECT TEAM LEADER	BRIDGE DRAWING	DATE	DRAWING NO.
								MRC	EMA	QN	No Scale	Mark Clabaugh	1 of 17	January 2008	

ACTUAL FILE NAME: HEHO10(1)100(1)DESIGN.DGN
1/24/2008 5:02:09 PM M:\Projects\Heho\01\100(1)\bridge\Microsta\HEHO10(1)100(1)OPROJECT.DGN

REGION	STATE	PROJECT	SHEET NO.
MW	IA	HEHO 10(1),100(1)	R02

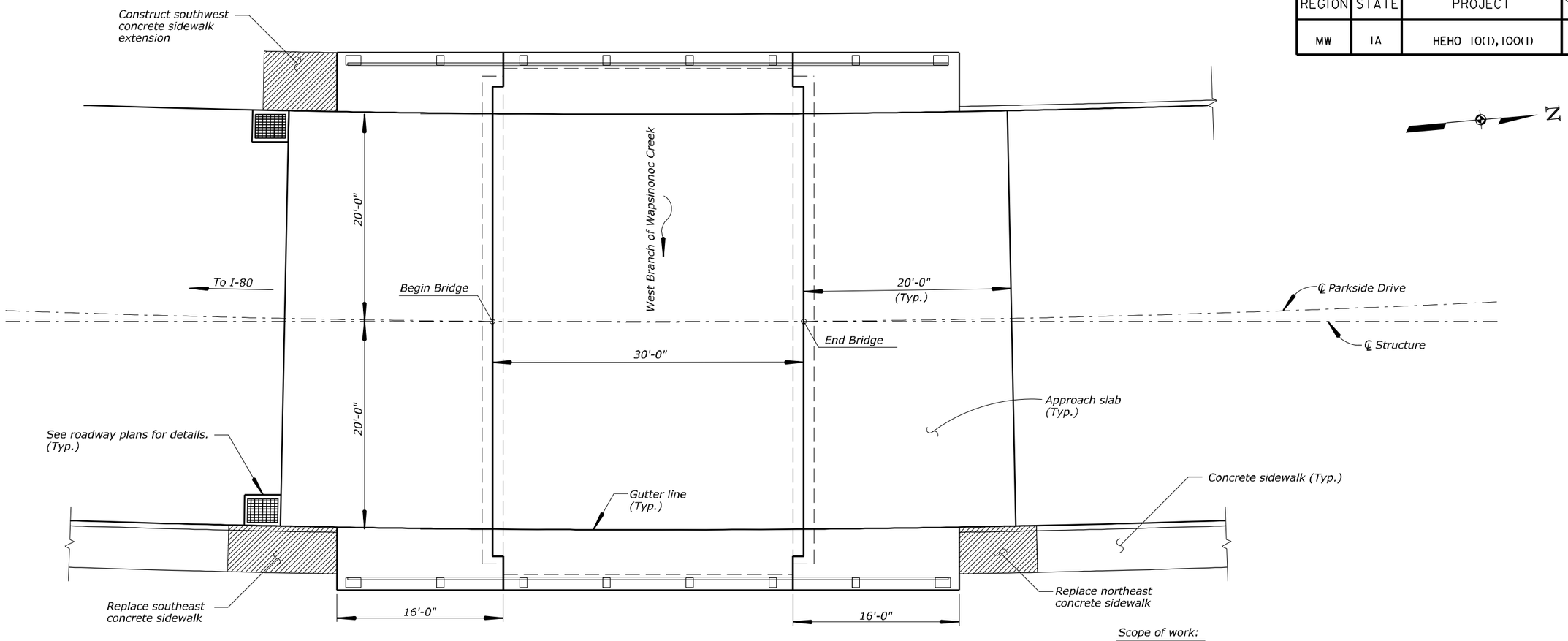

PLAN

Scope of work:

1. Hydrodemolish bridge deck concrete, Pay Item 56001-0000.
2. Construct concrete overlay, Pay Item 56202-4000.
3. Replace section of sidewalk at southeast and northeast bridge approaches, Pay Item 61501-0100.
4. Construct southwest concrete sidewalk extension, Pay Item 55201-0200.
5. Clean and paint existing bridge railing, Pay Item 56301-2000.
6. Repair detriorating concrete area on underside of bridge at scuppers, Pay Item 55205-0000.

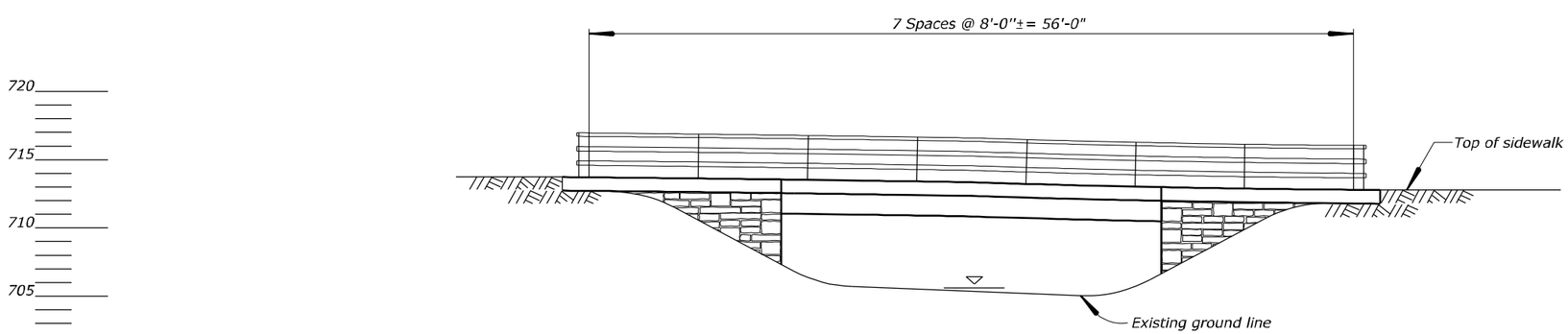

ELEVATION

Structure Number 6470-004P

U.S. DEPARTMENT OF TRANSPORTATION
FEDERAL HIGHWAY ADMINISTRATION
EASTERN FEDERAL LANDS HIGHWAY DIVISION

HERBERT HOOVER NATIONAL HISTORIC SITE

PARKSIDE DRIVE BRIDGE

PLAN & ELEVATION

NO.	DATE	BY	REVISIONS	NO.	DATE	BY	REVISIONS	DESIGNED BY	DRAWN BY	CHECKED BY	SCALE	PROJECT TEAM LEADER	BRIDGE DRAWING	DATE	DRAWING NO.
								MRC	EMA	QN	No Scale	Mark Clabaugh	2 of 17	January 2008	

1/28/2008 2:55:15 PM M:\Projects\Heho\01\100\bridge\Microsta\HEHO(01)100(1)PROJECT.DGN
ACTUAL FILE:PE.DGN

REGION	STATE	PROJECT	SHEET NO.
MW	IA	HEHO 10(1),100(1)	R03

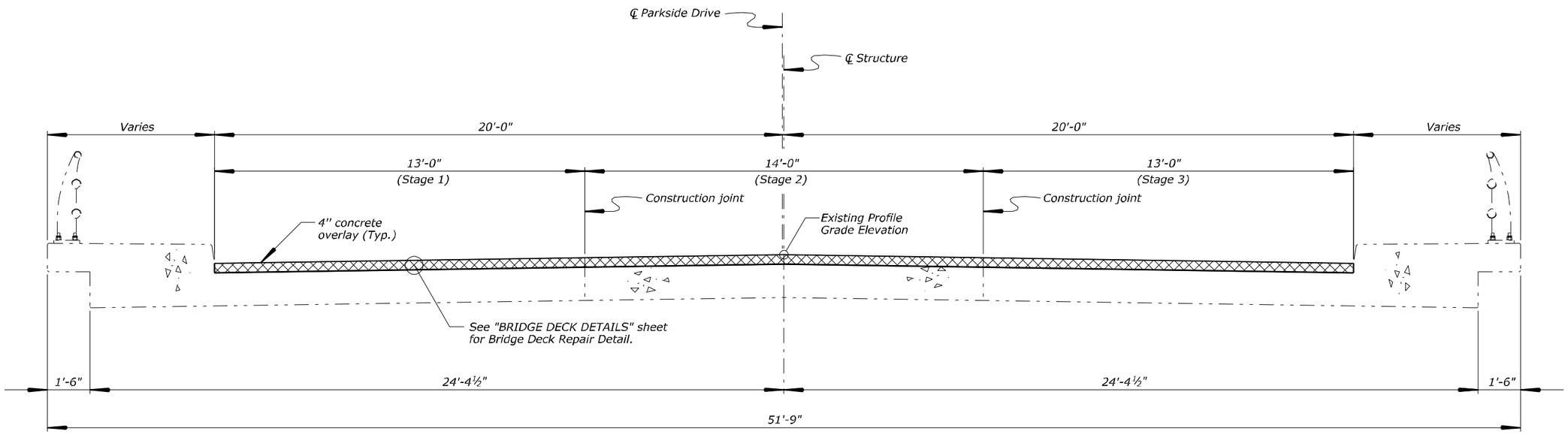

TYPICAL SECTION

Structure Number 6470-004P

U.S. DEPARTMENT OF TRANSPORTATION
FEDERAL HIGHWAY ADMINISTRATION
EASTERN FEDERAL LANDS HIGHWAY DIVISION

HERBERT HOOVER NATIONAL HISTORIC SITE

PARKSIDE DRIVE BRIDGE

TYPICAL SECTION

NO.	DATE	BY	REVISIONS	NO.	DATE	BY	REVISIONS	DESIGNED BY	DRAWN BY	CHECKED BY	SCALE	PROJECT TEAM LEADER	BRIDGE DRAWING	DATE	DRAWING NO.
								MRC	EMA	ON	½"=1'-0"	Mark Clabaugh	3 of 17	January 2008	

ACTUAL FILE:TYPXS.DGN
1/24/2008 1:25:50 AM M:\Projects\Heho\01\100(1)\bridge\Microsta\HEH0(1)\100(1)\0PROJECT.DGN

REGION	STATE	PROJECT	SHEET NO.
MW	IA	HEHO 10(1),100(1)	R04

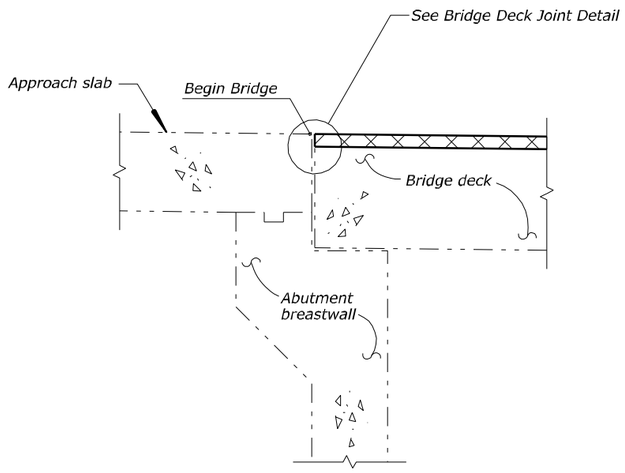

BRIDGE JOINT AT SOUTH ABUTMENT
(North abutment similar)

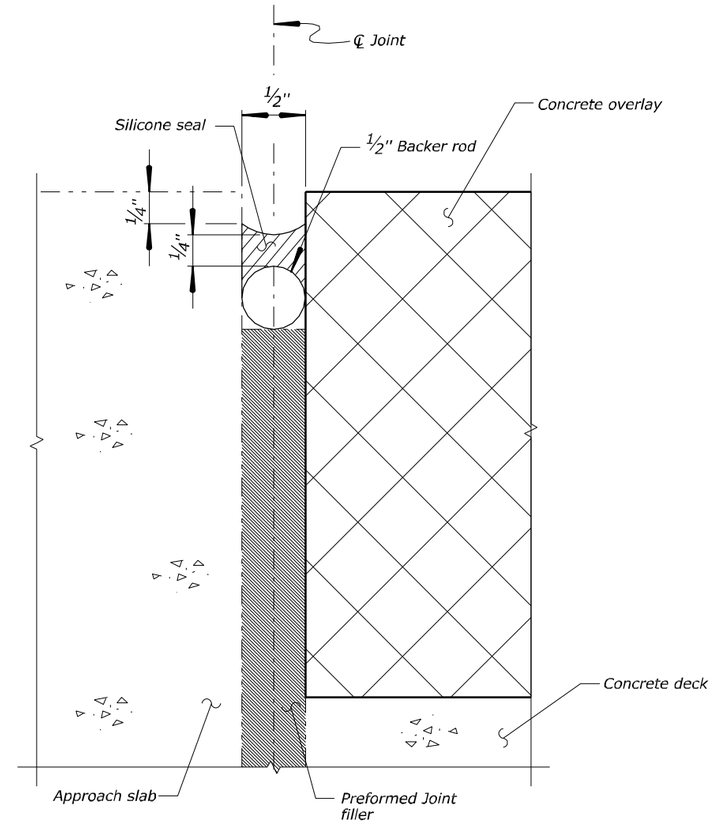

BRIDGE DECK JOINT DETAIL

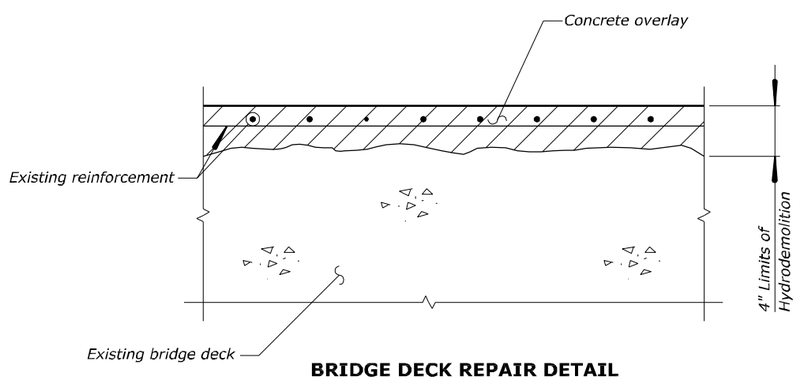

BRIDGE DECK REPAIR DETAIL
(Not to scale)

Note:

1. Remove top portion of existing bridge deck concrete to 1" below top mat of reinforcing steel.

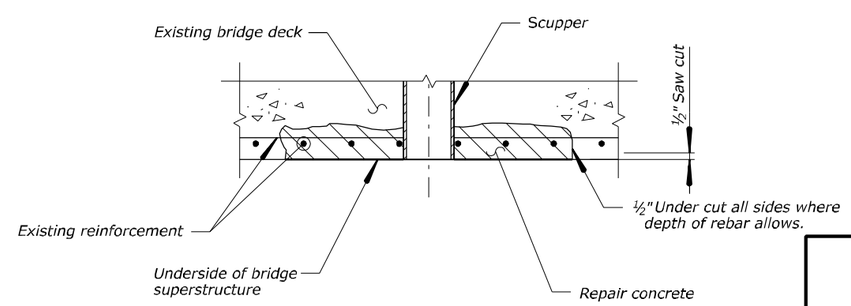

OVERHEAD DECK REPAIR DETAIL
(Typcial at both scuppers)

Note:

1. Location of concrete repair and cracking are approximate. Depth of concrete rebars may vary. Limits of removal areas will be determined in the field by the CO.

Structure Number 6470-004P

U.S. DEPARTMENT OF TRANSPORTATION
FEDERAL HIGHWAY ADMINISTRATION
EASTERN FEDERAL LANDS HIGHWAY DIVISION

HERBERT HOOVER NATIONAL HISTORIC SITE

PARKSIDE DRIVE BRIDGE

BRIDGE DECK DETAILS

NO.	DATE	BY	REVISIONS	NO.	DATE	BY	REVISIONS	DESIGNED BY	DRAWN BY	CHECKED BY	SCALE	PROJECT TEAM LEADER	BRIDGE DRAWING	DATE	DRAWING NO.
								MRC	EMA	QN	No Scale	Mark Clabaugh	4 of 17	January 2008	

ACTUAL FILE: BRDGDECKDETS.DGN
M:\Projects\heho\00\100\1\bridgeWiconsto\HEHO(1)100(1)PROJECT.DGN 1:26:10 AM 1/24/2008

REGION	STATE	PROJECT	SHEET NO.
MW	IA	HEHO 10(1),100(1)	R05

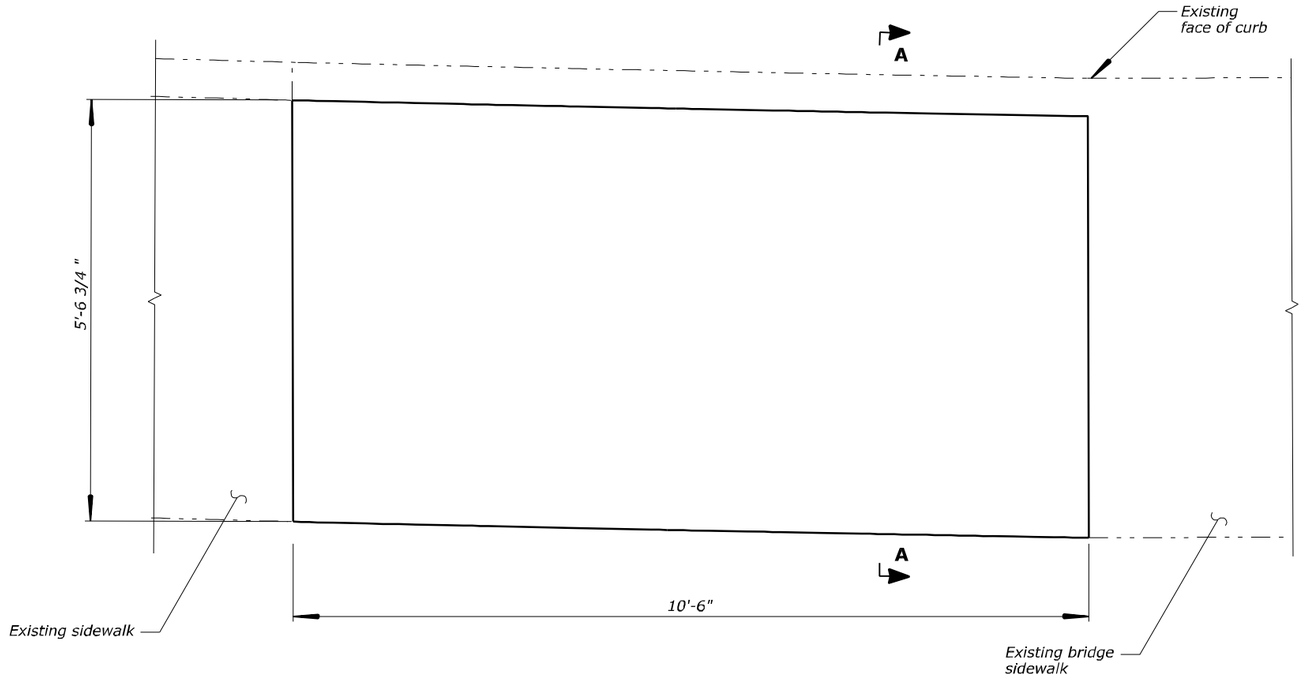

PLAN VIEW
(southeast sidewalk)

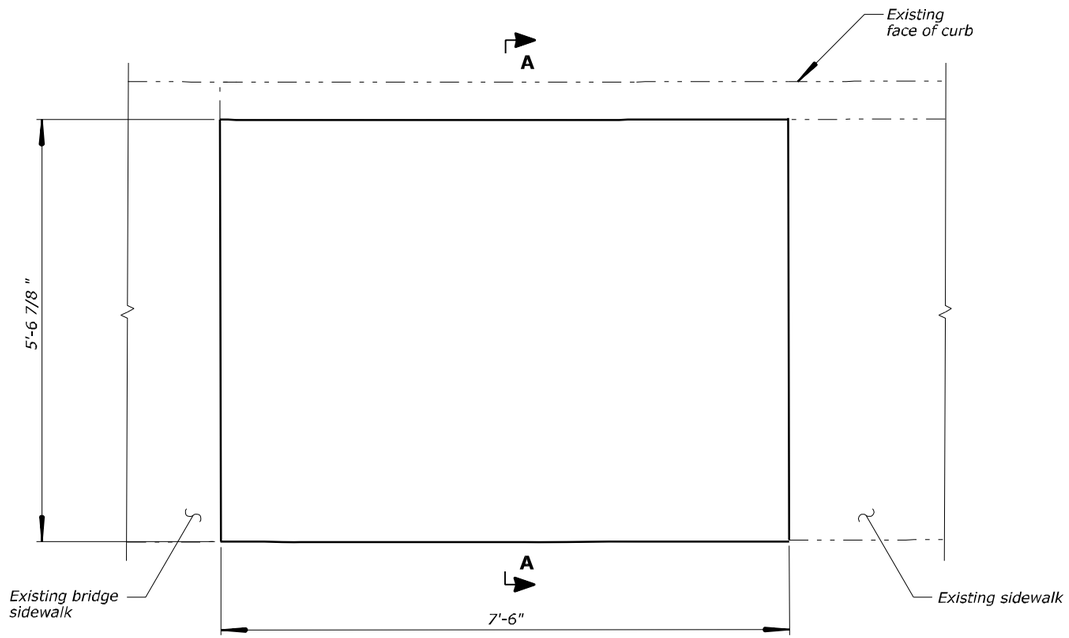

PLAN VIEW
(northeast sidewalk)

Notes:

1. *Adjust length of sidewalk removal to best fit site conditions.*
2. *Locate all utilities and obtain CO approval prior to beginning excavation operations.*
3. *Limit extent of disturbance to areas immediately adjacent to the existing sidewalk.*

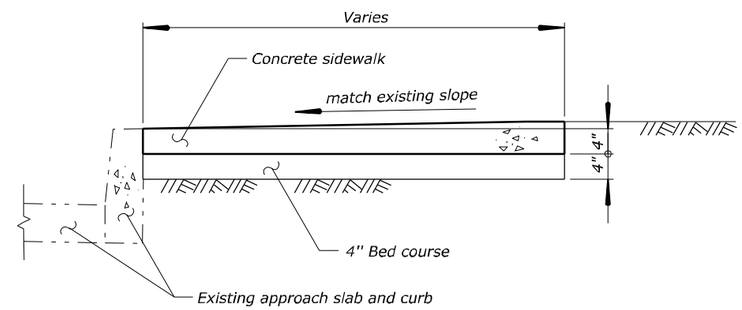

SECTION A-A

Structure Number 6470-004P

U.S. DEPARTMENT OF TRANSPORTATION
FEDERAL HIGHWAY ADMINISTRATION
EASTERN FEDERAL LANDS HIGHWAY DIVISION

HERBERT HOOVER NATIONAL HISTORIC SITE

PARKSIDE DRIVE BRIDGE

NORTHEAST AND SOUTHEAST CONCRETE SIDEWALK

NO.	DATE	BY	REVISIONS	NO.	DATE	BY	REVISIONS	DESIGNED BY	DRAWN BY	CHECKED BY	SCALE	PROJECT TEAM LEADER	BRIDGE DRAWING	DATE	DRAWING NO.
								MRC	EMA	ON	1" = 1'-0"	Mark Clabaugh	5 of 17	January 2008	

ACTUAL FILE: NESE CON SIDEWALK.DGN
1/24/2008 1:26:32 AM M:\Projects\heho\01\100\1\bridge\Microsta\HEHO(01)\100(1)\0PROJECT.DGN

REGION	STATE	PROJECT	SHEET NO.
MW	IA	HEHO 10(1),100(1)	R06

Notes:

1. Drill Holes and epoxy resin grout #9 Dowels in place.
2. Size drilled hole to meet manufacturer's recommendations.

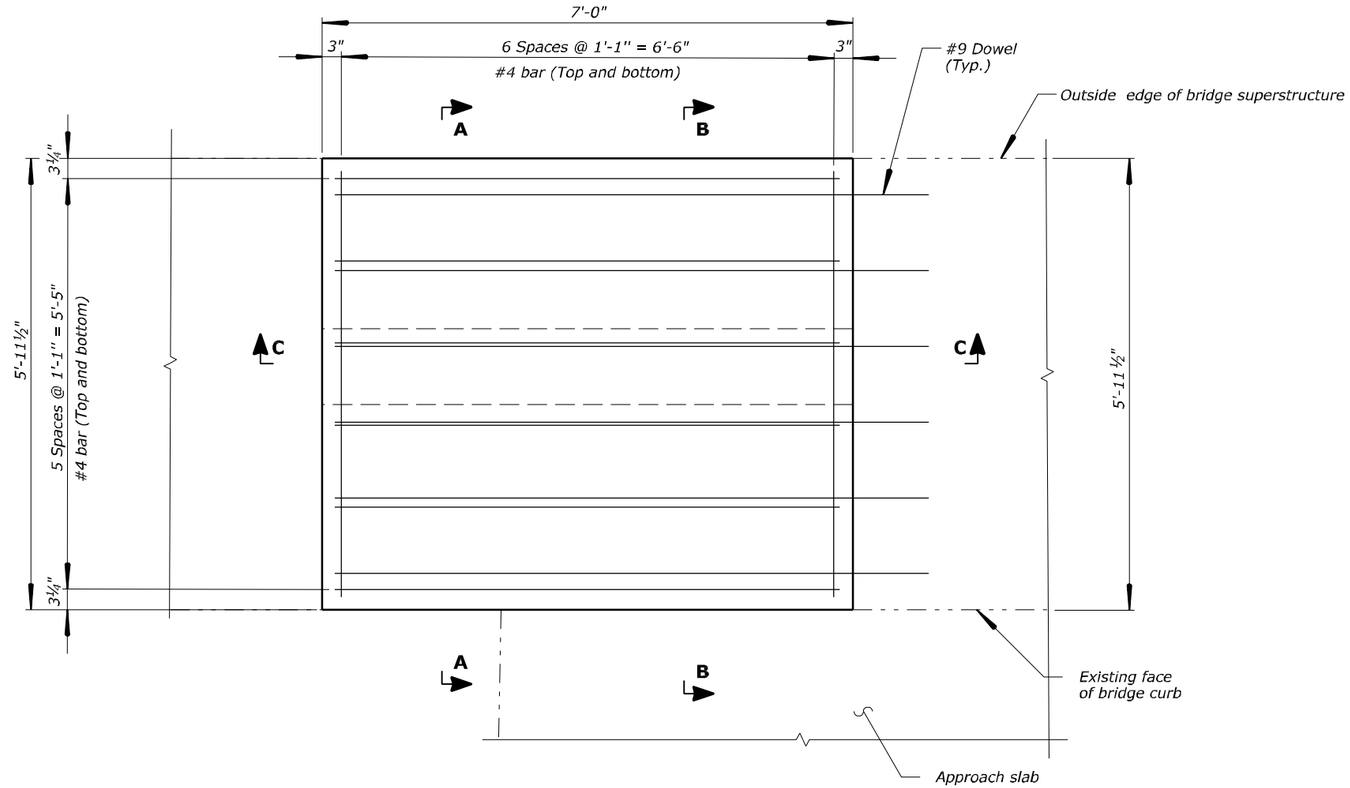

PLAN VIEW

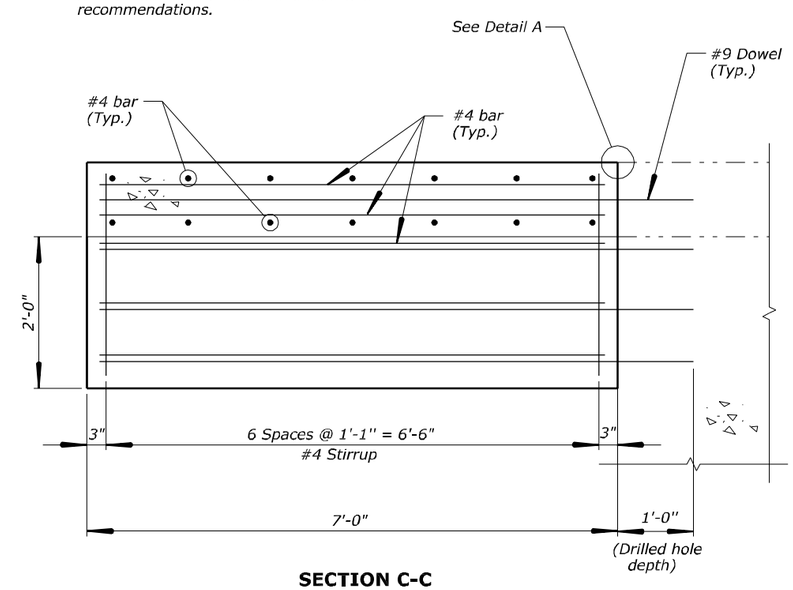

SECTION C-C

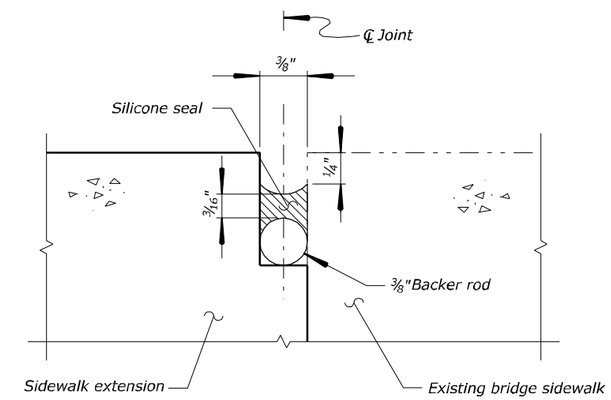

DETAIL A

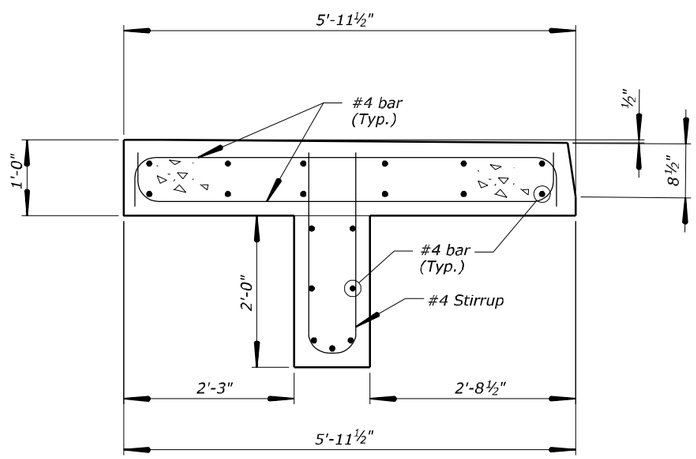

SECTION A-A

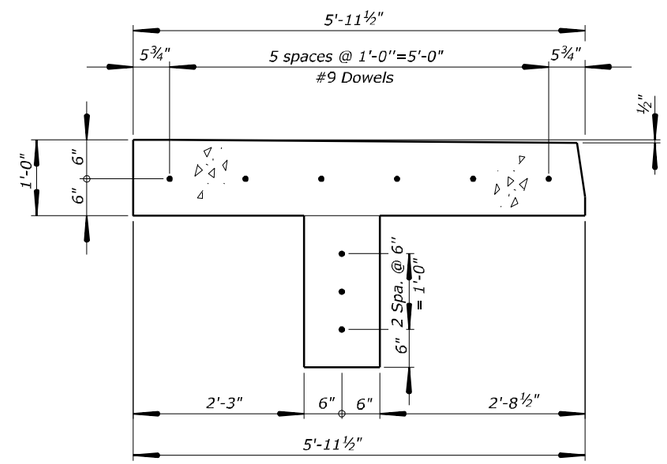

SECTION B-B

Structure Number 6470-004P

U.S. DEPARTMENT OF TRANSPORTATION
FEDERAL HIGHWAY ADMINISTRATION
EASTERN FEDERAL LANDS HIGHWAY DIVISION

HERBERT HOOVER NATIONAL HISTORIC SITE

PARKSIDE DRIVE BRIDGE

SOUTHWEST BRIDGE SIDEWALK EXTENSION

NO.	DATE	BY	REVISIONS	NO.	DATE	BY	REVISIONS	DESIGNED BY	DRAWN BY	CHECKED BY	SCALE	PROJECT TEAM LEADER	BRIDGE DRAWING	DATE	DRAWING NO.
								MRC	EMA	ON	1" = 1'-0"	Mark Clabaugh	6 of 17	January 2008	

ACTUAL FILE: SW BRDG SDWLK EXT.DGN
1/24/2008 5:03:35 PM M:\Projects\Heho\GI\100\bridge\Microsta\HEHO(1)100(1)\0PROJECT.DGN

AS-BUILT DRAWING (FOR INFORMATION ONLY)

Structure No. 6470-0004P

HERBERT HOOVER NATIONAL HISTORIC SITE

REGION	STATE	PROJECT	SHEET NO.
MW	IA	HEHO 10(1) 100(1)	R07

REG.	STATE	PROJECT	SHEET NO	TOTAL SHEETS
MW	IOWA	HH-1		

1

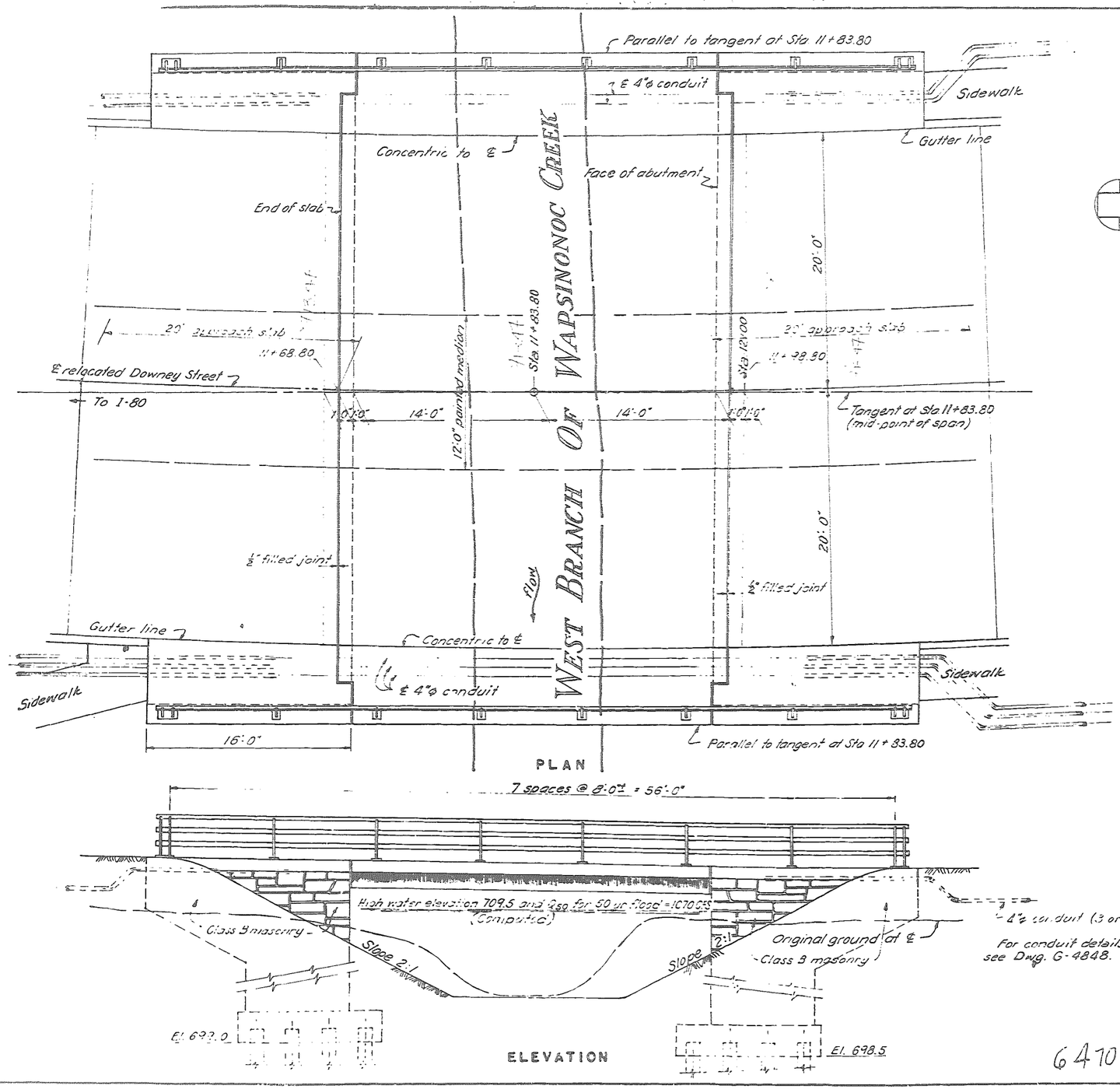

Designed E.D.B.
Drawn J.A.H.
Traced J.A.H.
Checked R.C.K.J.R.
Date Oct. 1959

432/60,900

Sheet 36 of 56

BRIDGE OVER WEST BRANCH OF WAPSINONOC CREEK

PLAN AND ELEVATION

SCALE: $\frac{1}{4}$" = 1'-0"

6470-004P

G-4845

NO.	DATE	BY	REVISIONS	NO.	DATE	BY	REVISIONS	DESIGNED BY	DRAWN BY	CHECKED BY	SCALE	PROJECT TEAM LEADER	BRIDGE DRAWING	DATE	DRAWING NO.
								MRC	EMA		No Scale	Mark Clabaugh	7 of 17	January 2008	

ACTUAL DESIGN FILE : R07-HEHO(X)(1)00(1)ASBUL.DGN
1/24/2008 1:32:24 AM M:\Projects\heho\X(1)100(1)\bridge\Asbuilts\PDF4P\R07-HEHO(1)(1)00(1)ASBUL.dgn

AS-BUILT DRAWING (FOR INFORMATION ONLY)

Structure No. 6470-0004P

HERBERT HOOVER NATIONAL HISTORIC SITE

REGION	STATE	PROJECT	SHEET NO.
MW	IA	HEHO 10(1) 100(1)	R08

REG.	STATE	PROJECT	SHEET NO.	TOTAL SHEETS
MW	IOWA	HW-8		

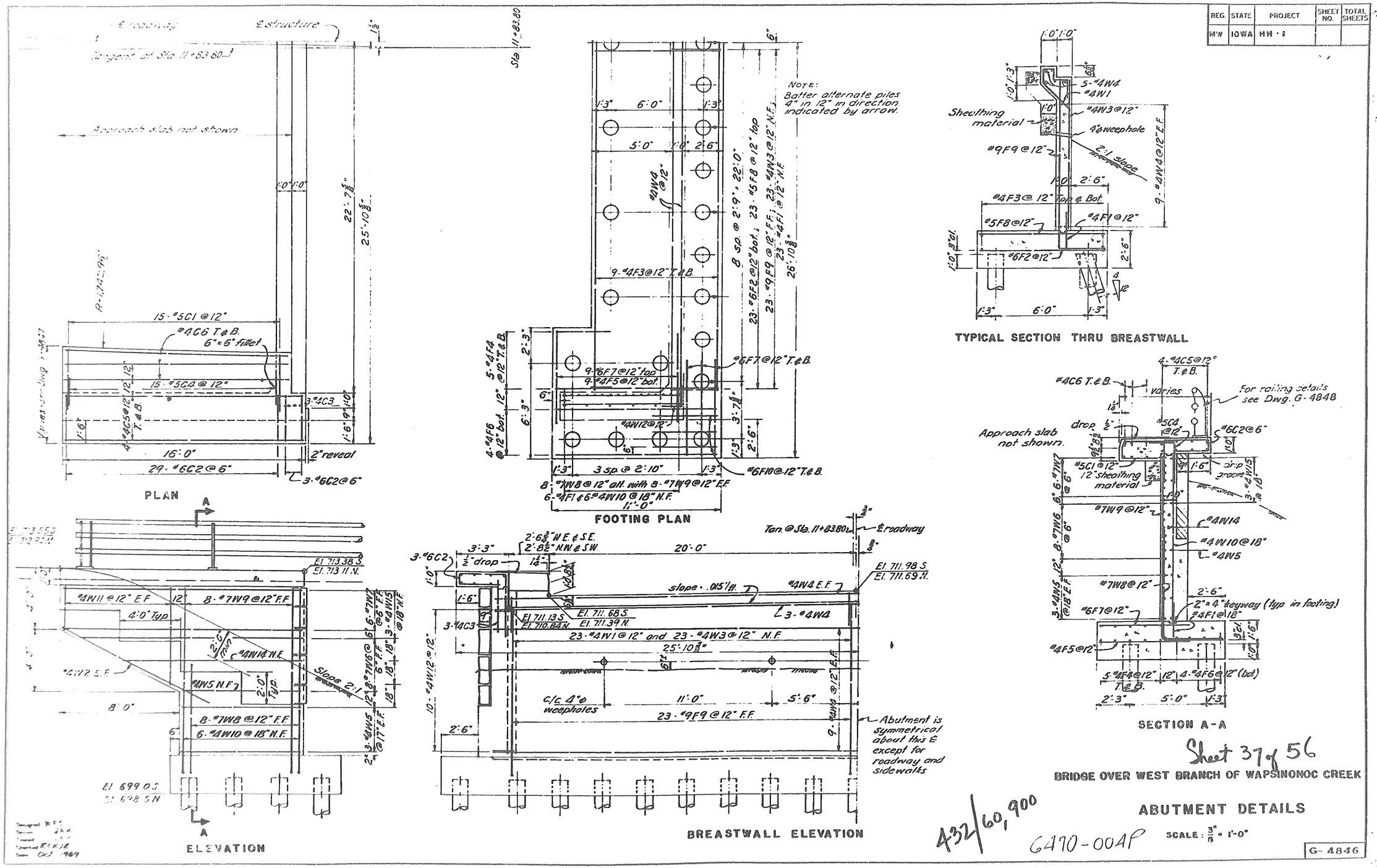

432/60,900

6470-004P

ACTUAL DESIGN FILE : R08-HEHO(1)100(1)ASB2.DGN

M:\Projects\heho\0(1)100(1)\bridge\asbuilts\PDF4P\R08-HEHO(1)100(1)ASB2.dgn 1:32:42 AM 1/24/2008

NO.	DATE	BY	REVISIONS	NO.	DATE	BY	REVISIONS	DESIGNED BY	DRAWN BY	CHECKED BY	SCALE	PROJECT TEAM LEADER	BRIDGE DRAWING	DATE	DRAWING NO.
								MRC	EMA		No Scale	Mark Clabaugh	8 of 17	January 2008	

AS-BUILT DRAWING (FOR INFORMATION ONLY)

Structure No. 6470-0004P

HERBERT HOOVER NATIONAL HISTORIC SITE

REGION	STATE	PROJECT	SHEET NO.
MW	IA	HEHO 10(1) 100(1)	R09

REG.	STATE	PROJECT	SHEET NO.	TOTAL SHEETS
MW	IOWA	HH-1		

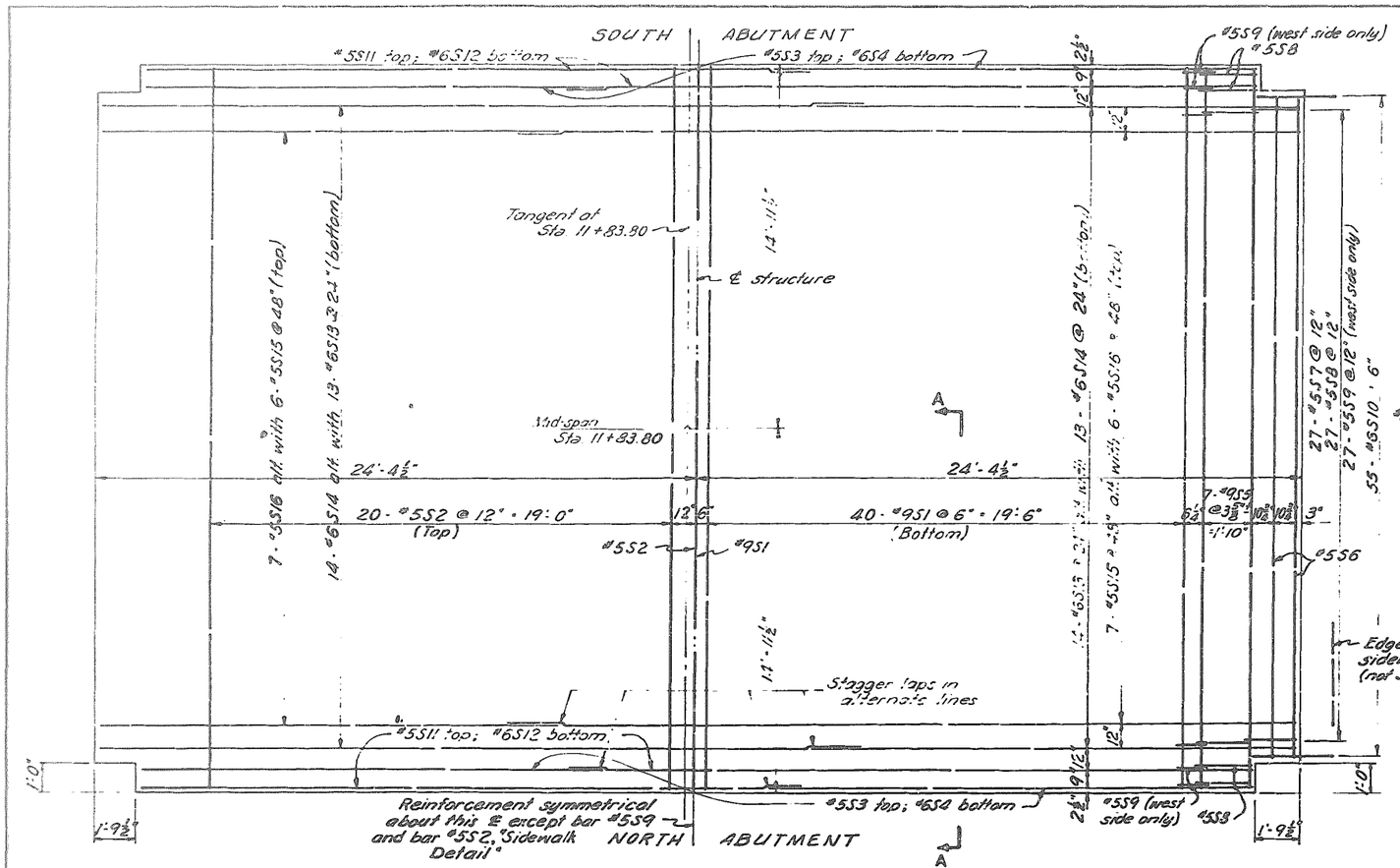

SLAB REINFORCEMENT PLAN

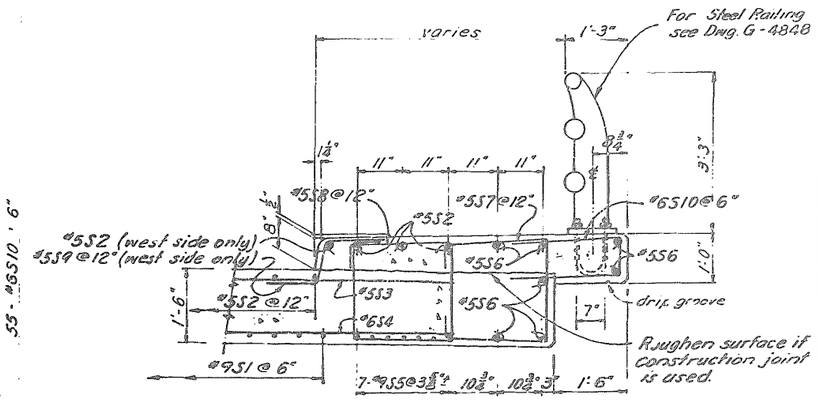

SIDEWALK DETAIL

SCALE: ¾" = 1'-0"

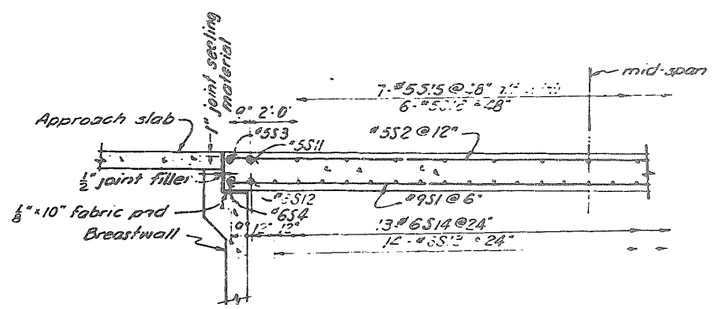

PART LONGITUDINAL SECTION A-A

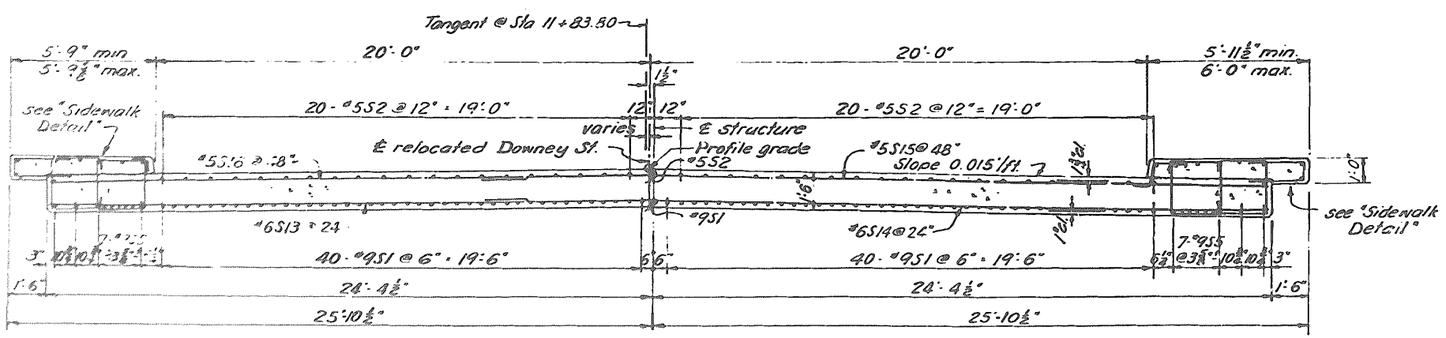

TRANSVERSE SECTION

432/60,900

Sheet 38 of 56

BRIDGE OVER WEST BRANCH OF WAPSINONOC CREEK

SUPERSTRUCTURE DETAILS

SCALE: ⅜" = 1'-0" UNLESS NOTED

6470-004P

G-4847

NO.	DATE	BY	REVISIONS	NO.	DATE	BY	REVISIONS	DESIGNED BY	DRAWN BY	CHECKED BY	SCALE	PROJECT TEAM LEADER	BRIDGE DRAWING	DATE	DRAWING NO.
								MRC	EMA		No Scale	Mark Clabaugh	9 of 17	January 2008	

ACTUAL DESIGN FILE : R09-HEHO(1)(100(1)ASBL3.DGN

M:\Projects\heho\0(1)100(1)\bridge\Asbuilts\PDF4P\R09-HEHO(1)(100(1)ASB3.dgn 1:33:03 AM 1/24/2008

AS-BUILT DRAWING (FOR INFORMATION ONLY)

Structure No. 6470-0004P
HERBERT HOOVER NATIONAL HISTORIC SITE

REGION	STATE	PROJECT	SHEET NO.
MW	IA	HEHO 10(1) 100(1)	R10

REG.	STATE	PROJECT	SHEET NO	TOTAL SHEETS
MW	IOWA	HH - 1	41	58

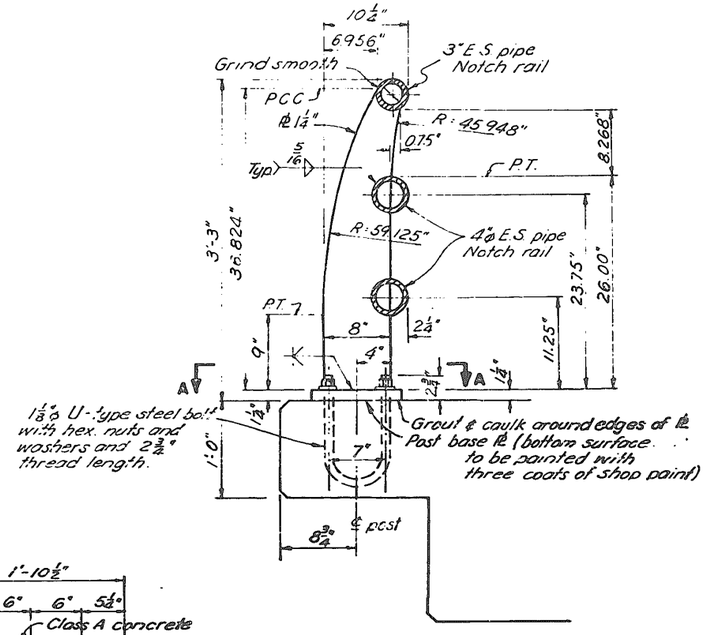

RAILING AND POST DETAIL
SCALE: 1½" = 1'-0"

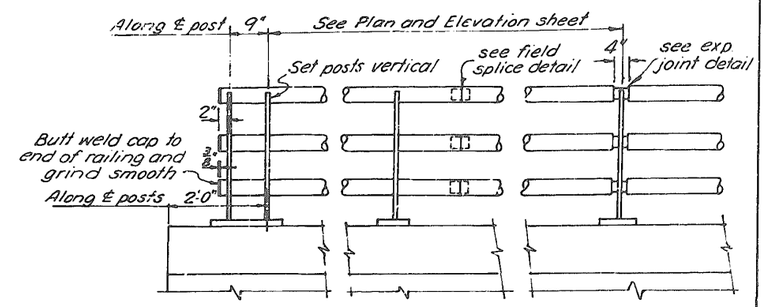

ELEVATION OF RAILING
SCALE: ¾" = 1'-0"

NOTE:
1. The steel for post base plates and posts shall conform to the requirements for ASTM A 36 steel and be of a weldable quality.
2. All railing shall be extra strong pipe conforming to the requirements for ASTM A53 grade B pipe.
3. It is recommended that field measurement of anchor bolt spacings be made before fabrication of railings.
4. Post base plates to be set parallel to grade.
5. The steel for anchor bolts, nuts and washers shall conform to the requirements for ASTM A325 and shall be galvanized in accordance with the requirements of ASTM A153.

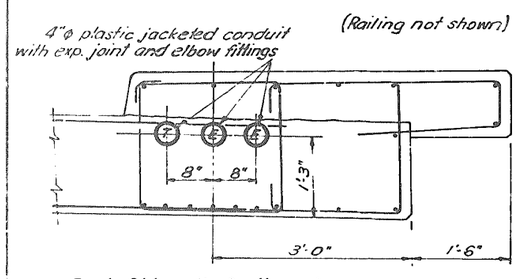

East Sidewalk Section shown
West Sidewalk Section similar except omit Conduit "T."

TYPICAL SECTION
SCALE: 1" = 1'-0"

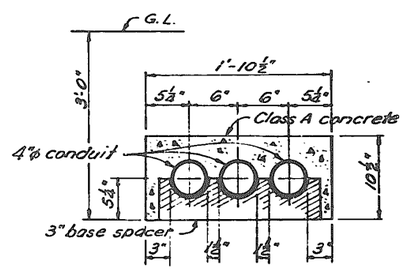

CONCRETE CRADLE
SCALE: 1½" = 1'-0"

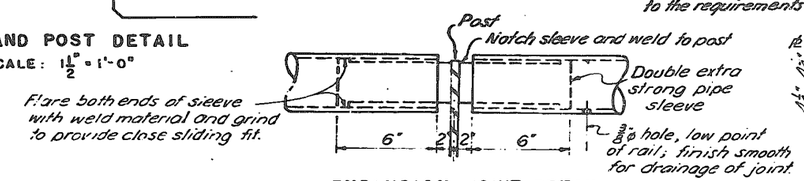

EXPANSION JOINT DETAIL
NO SCALE

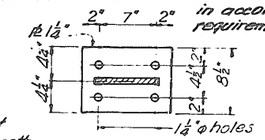

SECTION A-A
SCALE: 1½" = 1'-0"

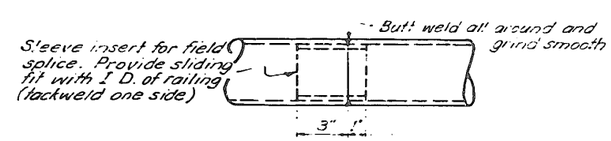

FIELD SPLICE DETAIL
NO SCALE

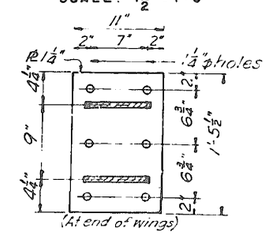

SECTION A-A
SCALE: 1½" = 1'-0"

STEEL RAILING DETAIL

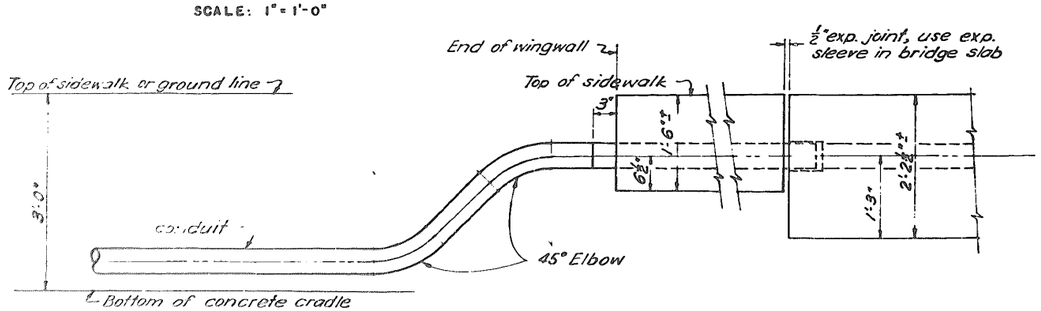

ELEVATION
SCALE: 1" = 1'-0"

CONDUIT DETAIL

JAH
JAH
JAH
WFS
Oct 1989

BRIDGE OVER WEST BRANCH OF WAPSINONOC CREEK

MISCELLANEOUS DETAILS

SCALE AS SHOWN

6470-004P

G-4848

NO.	DATE	BY	REVISIONS	NO.	DATE	BY	REVISIONS	DESIGNED BY	DRAWN BY	CHECKED BY	SCALE	PROJECT TEAM LEADER	BRIDGE DRAWING	DATE	DRAWING NO.
								MRC	EMA		No Scale	Mark Clabaugh	10 of 17	January 2008	

ACTUAL DESIGN FILE : R10-HEHO(1)100(1)ASB4.DGN

1/24/2008 1:33:24 AM M:\Projects\heho\10(1)100(1)\bridge\Asbuilts\PDF4P\R10-HEHO(1)100(1)ASB4.dgn

REGION	STATE	PROJECT	SHEET NO.
MW	IA	HEHO 10(1),100(1)	R11

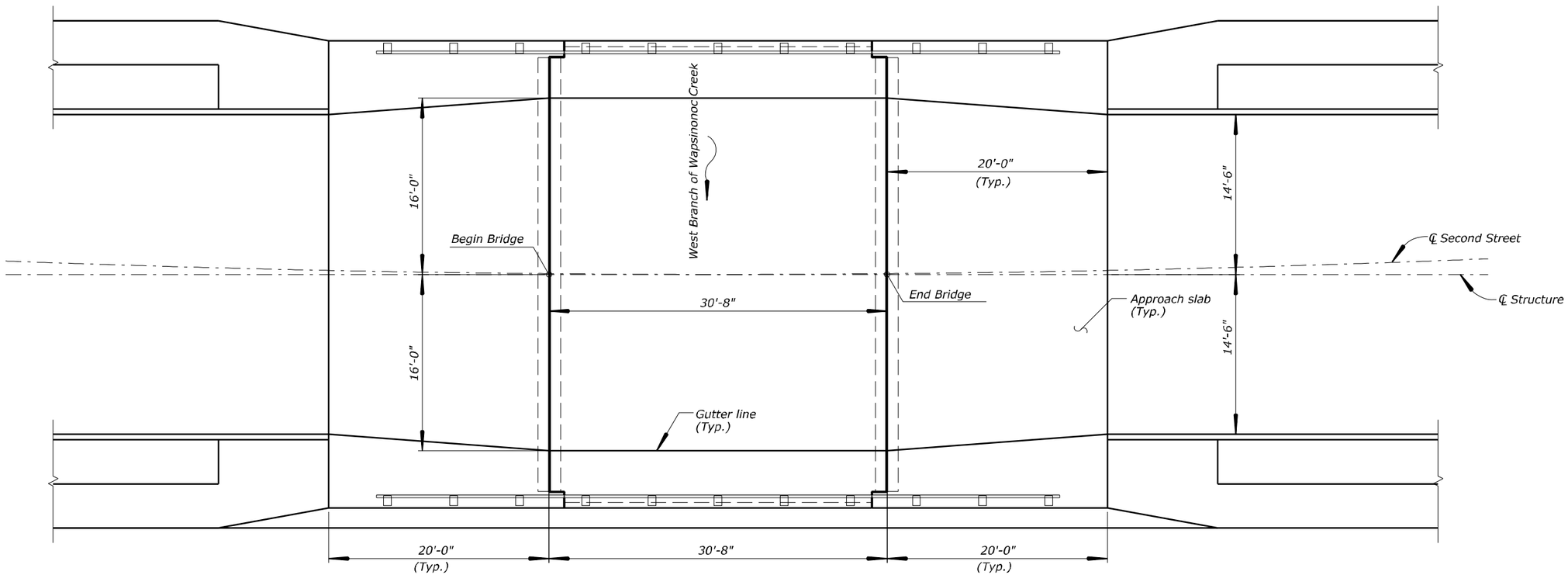

PLAN

Scope of work:

1. Replace bridge expansion joint seals, Pay Item 55211-0000.
2. Install missing bridge railing end caps at southeast and northwest corners, Pay Item 55601-0100.
3. Remove and replace vertical joint seal between abutment breastwall and wingwall, Pay Item 55211-0000.
4. Repair Deteriorating concrete area on south approach slab, Pay Item 55205-0000.

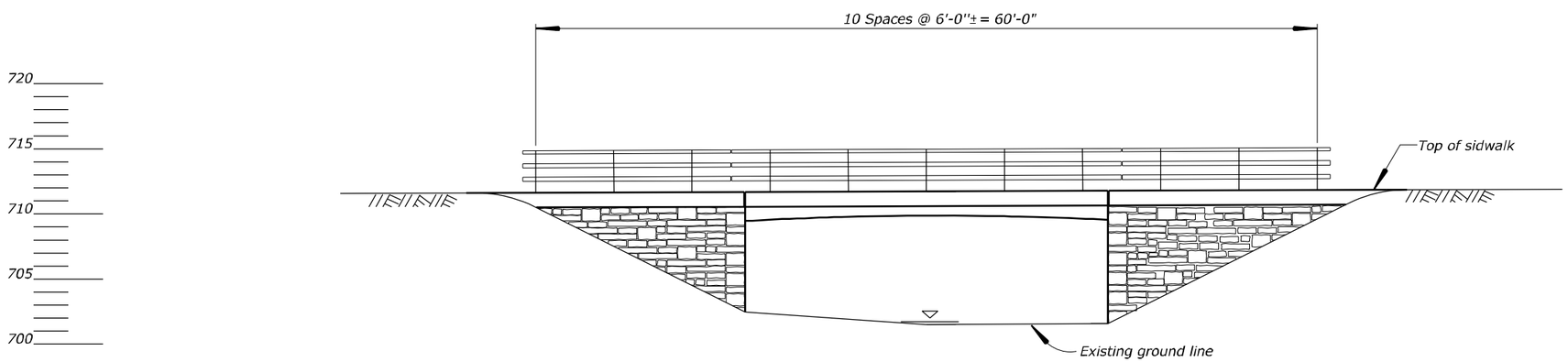

ELEVATION

Structure Number 6470-005P

U.S. DEPARTMENT OF TRANSPORTATION
FEDERAL HIGHWAY ADMINISTRATION
EASTERN FEDERAL LANDS HIGHWAY DIVISION

HERBERT HOOVER NATIONAL HISTORIC SITE

SECOND STREET BRIDGE

PLAN & ELEVATION

NO.	DATE	BY	REVISIONS	NO.	DATE	BY	REVISIONS	DESIGNED BY	DRAWN BY	CHECKED BY	SCALE	PROJECT TEAM LEADER	BRIDGE DRAWING	DATE	DRAWING NO.
								MRC	EMA	QN	No Scale	Mark Clabaugh	11 of 17	January 2008	

ACTUAL FILE: PE.DGN
M:\Projects\hehoV01\100k\bridge\Microsta\HEHO10\100k\0PROJECT.DGN 5:04:20 PM 1/24/2008

REGION	STATE	PROJECT	SHEET NO.
MW	IA	HEHO 10(1),100(1)	R12

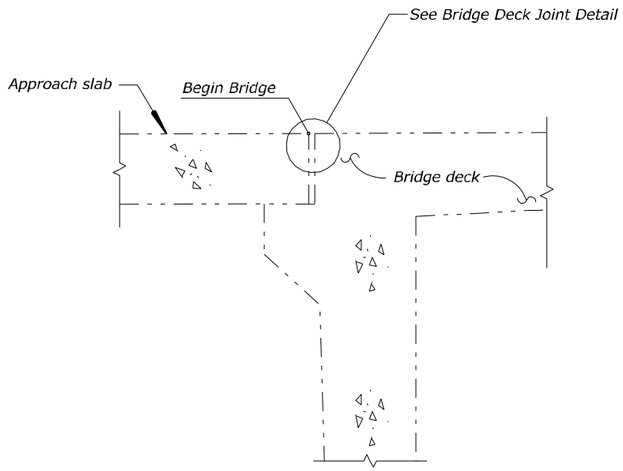

BRIDGE DECK JOINT AT SOUTH ABUTMENT
(North abutment similar)

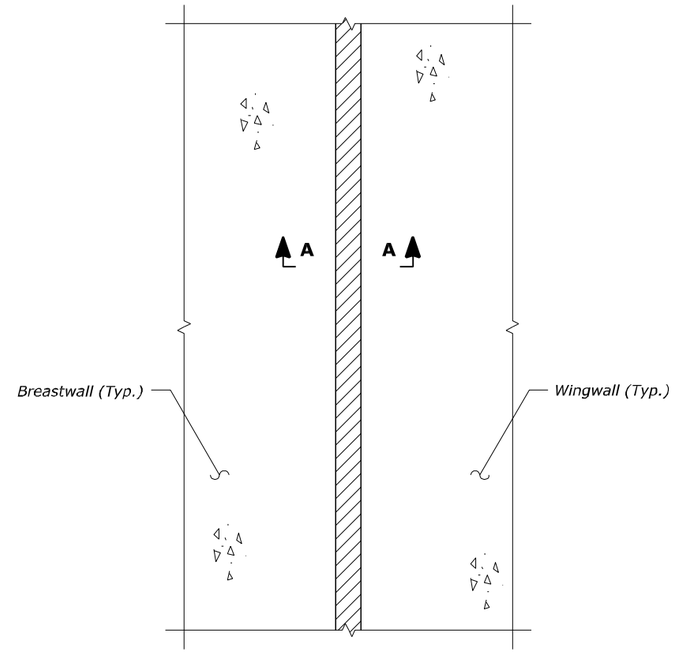

TYPICAL VERTICAL WALL JOINT

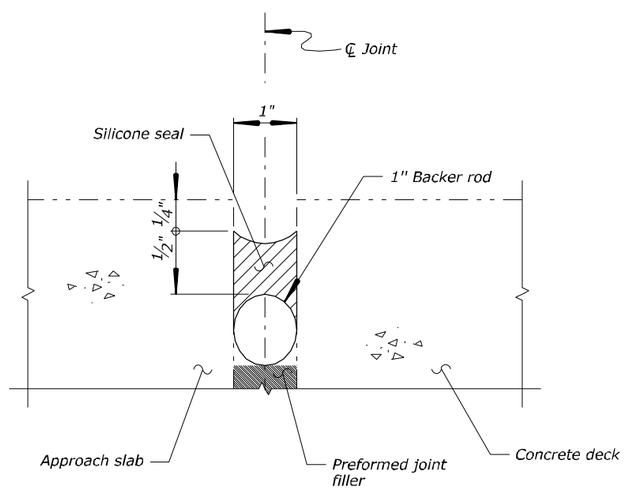

BRIDGE DECK JOINT DETAIL

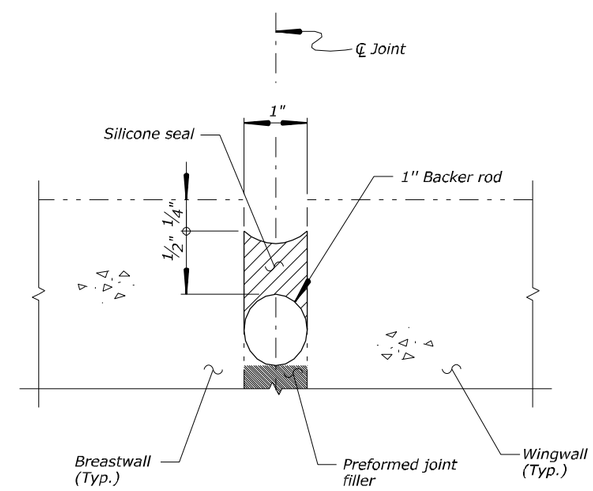

SECTION A-A

Structure Number 6470-005P

U.S. DEPARTMENT OF TRANSPORTATION
FEDERAL HIGHWAY ADMINISTRATION
EASTERN FEDERAL LANDS HIGHWAY DIVISION

HERBERT HOOVER NATIONAL HISTORIC SITE

SECOND STREET BRIDGE

DECK AND WALL JOINT DETAILS

NO.	DATE	BY	REVISIONS	NO.	DATE	BY	REVISIONS	DESIGNED BY	DRAWN BY	CHECKED BY	SCALE	PROJECT TEAM LEADER	BRIDGE DRAWING	DATE	DRAWING NO.
								MRC	EMA	QN	No Scale	Mark Clabaugh	12 of 17	January 2008	

ACTUAL FILE: DECKJTDETS.DGN
1/24/2008 5:04:48 PM M:\Projects\Heho\QN\100(1)\bridge\Microsta\HEHO(1)\100(1)\PROJECT.DGN

REGION	STATE	PROJECT	SHEET NO.
MW	IA	HEHO 10(1),100(1)	R13

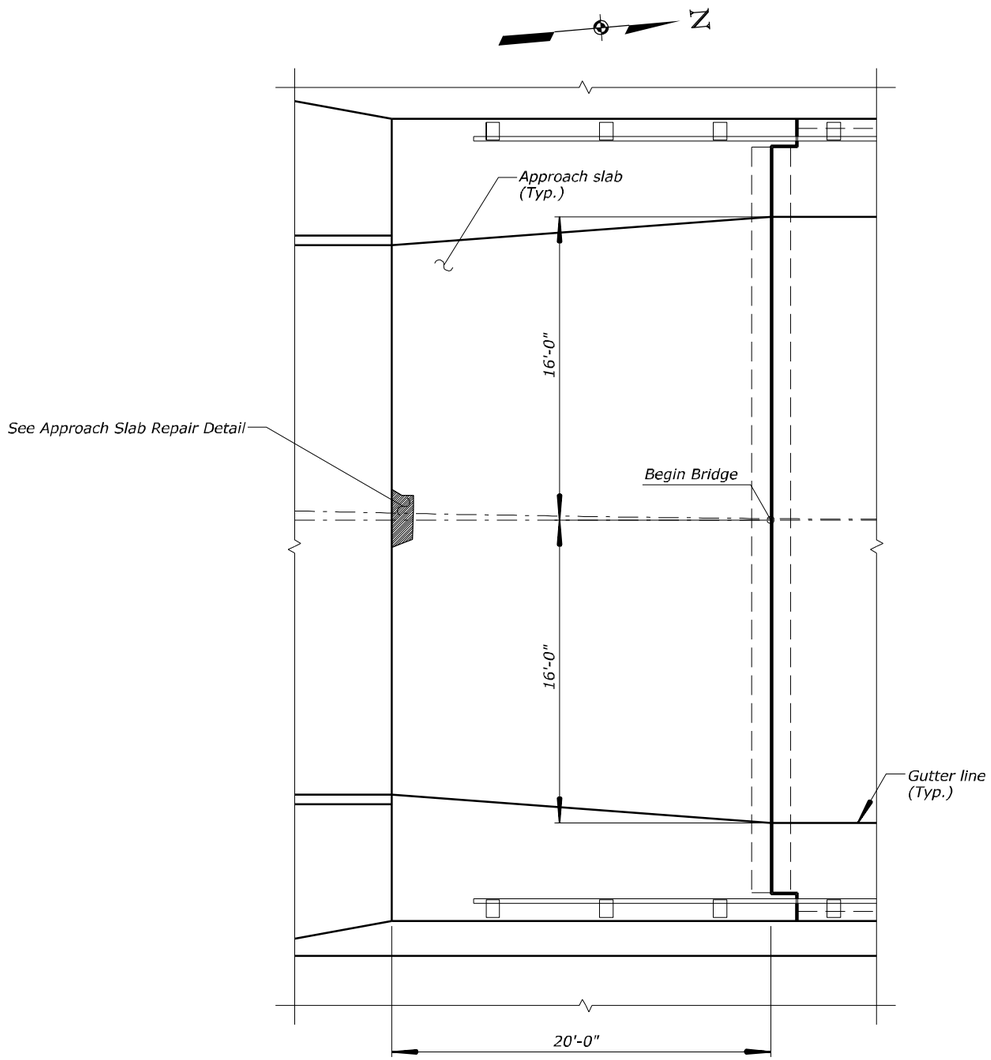

PARTIAL PLAN

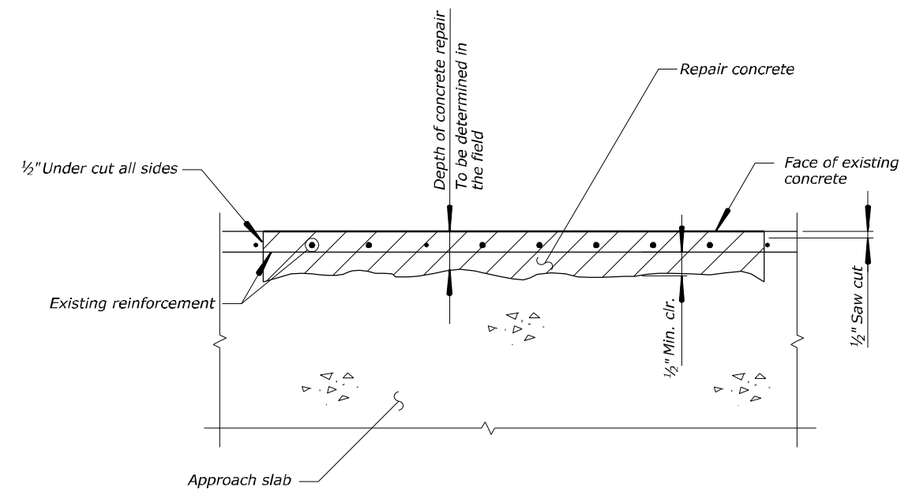

APPOACH SLAB REPAIR DETAIL

NOTE:

Remove top portion of existing approach slab concrete to 1" below top mat of reinforcing steel.

Structure Number 6470-005P

U.S. DEPARTMENT OF TRANSPORTATION
FEDERAL HIGHWAY ADMINISTRATION
EASTERN FEDERAL LANDS HIGHWAY DIVISION

HERBERT HOOVER NATIONAL HISTORIC SITE

SECOND STREET BRIDGE

APPROACH SLAB REPAIR (PARTIAL DEPTH REMOVAL)

NO.	DATE	BY	REVISIONS	NO.	DATE	BY	REVISIONS	DESIGNED BY	DRAWN BY	CHECKED BY	SCALE	PROJECT TEAM LEADER	BRIDGE DRAWING	DATE	DRAWING NO.
								MRC	EMA	QN	No Scale	Mark Clabaugh	13 of 17	January 2008	

ACTUAL FILE: APPROACH-SLAB-REPAIR.DGN
1/24/2008 1:28:08 AM M:\Projects\heho\01\100(1)\bridge\Microsta\HEHO(1)\100(1)\0PROJECT.DGN

AS-BUILT DRAWING (FOR INFORMATION ONLY)

Structure No. 6470-005P

HERBERT HOOVER NATIONAL HISTORIC SITE

REGION	STATE	PROJECT	SHEET NO.
MW	IA	HEHO 10(1) 100(1)	R14

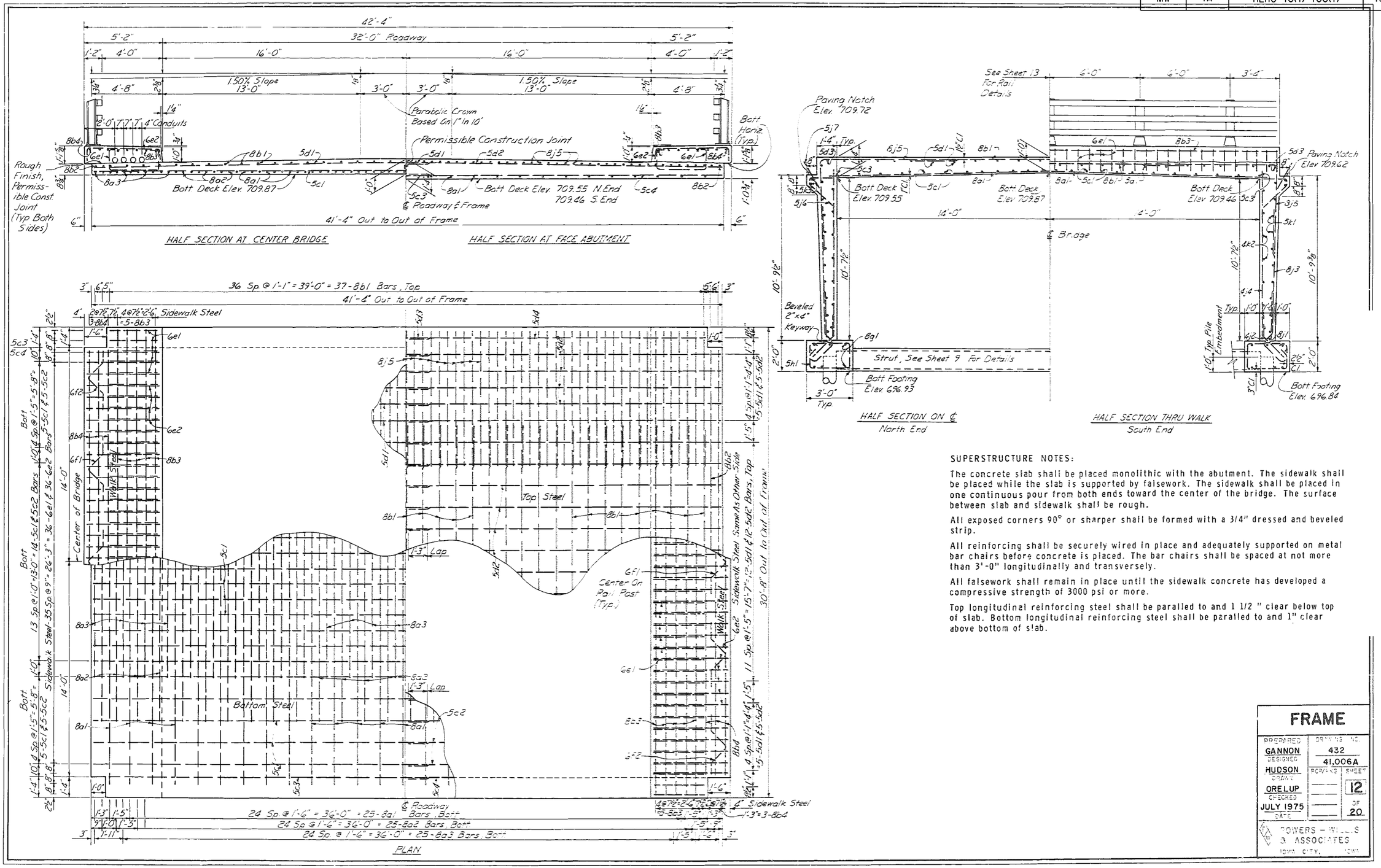

SUPERSTRUCTURE NOTES:

The concrete slab shall be placed monolithic with the abutment. The sidewalk shall be placed while the slab is supported by falsework. The sidewalk shall be placed in one continuous pour from both ends toward the center of the bridge. The surface between slab and sidewalk shall be rough.

All exposed corners 90° or sharper shall be formed with a 3/4" dressed and beveled strip.

All reinforcing shall be securely wired in place and adequately supported on metal bar chairs before concrete is placed. The bar chairs shall be spaced at not more than 3'-0" longitudinally and transversely.

All falsework shall remain in place until the sidewalk concrete has developed a compressive strength of 3000 psi or more.

Top longitudinal reinforcing steel shall be paralled to and 1 1/2 " clear below top of slab. Bottom longitudinal reinforcing steel shall be paralled to and 1" clear above bottom of slab.

FRAME

PREPARED	DRAWING NO.
GANNON	432
DESIGNED	41,006A
HUDSON	BOOK NO. / SHEET
DRAWN	12
ORELUP	OF
CHECKED	20
JULY 1975	
DATE	

POWERS - WILLIS & ASSOCIATES
IOWA CITY, IOWA

NO.	DATE	BY	REVISIONS	NO.	DATE	BY	REVISIONS	DESIGNED BY	DRAWN BY	CHECKED BY	SCALE	PROJECT TEAM LEADER	BRIDGE DRAWING	DATE	DRAWING NO.
								MRC	EMA		No Scale	Mark Clabaugh	14 of 17	January 2008	

ACTUAL DESIGN FILE : R14-HEHO(1)100(1)ASB5.DGN
M:\Projects\heho\0(1)100(1)\bridge\Asbuilts\PDF-5P\R14-HEHO(1)100(1)ASB5.dgn 1:30:25 AM 1/24/2008

AS-BUILT DRAWING (FOR INFORMATION ONLY)

Structure No. 6470-005P

HERBERT HOOVER NATIONAL HISTORIC SITE

REGION	STATE	PROJECT	SHEET NO.
MW	IA	HEHO 10(1) 100(1)	R15

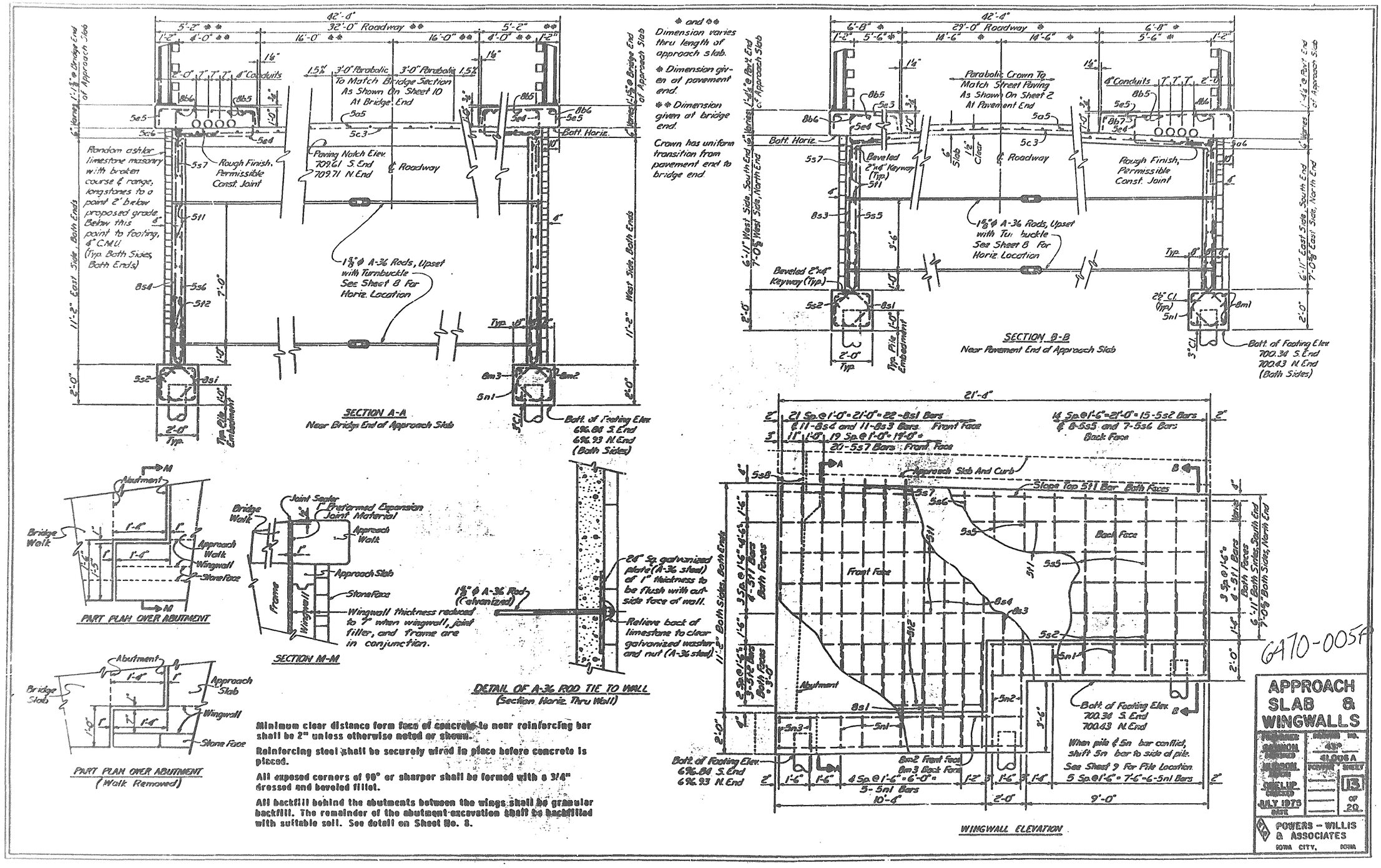

Minimum clear distance form face of concrete to near reinforcing bar shall be 2" unless otherwise noted or shown.

Reinforcing steel shall be securely wired in place before concrete is placed.

All exposed corners of 90° or sharper shall be formed with a 3/4" dressed and beveled fillet.

All backfill behind the abutments between the wings shall be granular backfill. The remainder of the abutment excavation shall be backfilled with suitable soil. See detail on Sheet No. 8.

NO.	DATE	BY	REVISIONS	NO.	DATE	BY	REVISIONS	DESIGNED BY	DRAWN BY	CHECKED BY	SCALE	PROJECT TEAM LEADER	BRIDGE DRAWING	DATE	DRAWING NO.
								MRC	EMA		No Scale	Mark Clabaugh	15 of 17	January 2008	

ACTUAL DESIGN FILE : R15-HEHO(1)100(1)ASB6.DGN
M:\Projects\heho\01(1)100(1)\bridge\Asbuilts\PDF-5PVR15-HEHO(1)100(1)ASB6.dgn
1:31:12 AM
1/24/2008

AS-BUILT DRAWING (FOR INFORMATION ONLY)

Structure No. 6470-005P

HERBERT HOOVER NATIONAL HISTORIC SITE

REGION	STATE	PROJECT	SHEET NO.
MW	IA	HEHO 10(1) 100(1)	R16

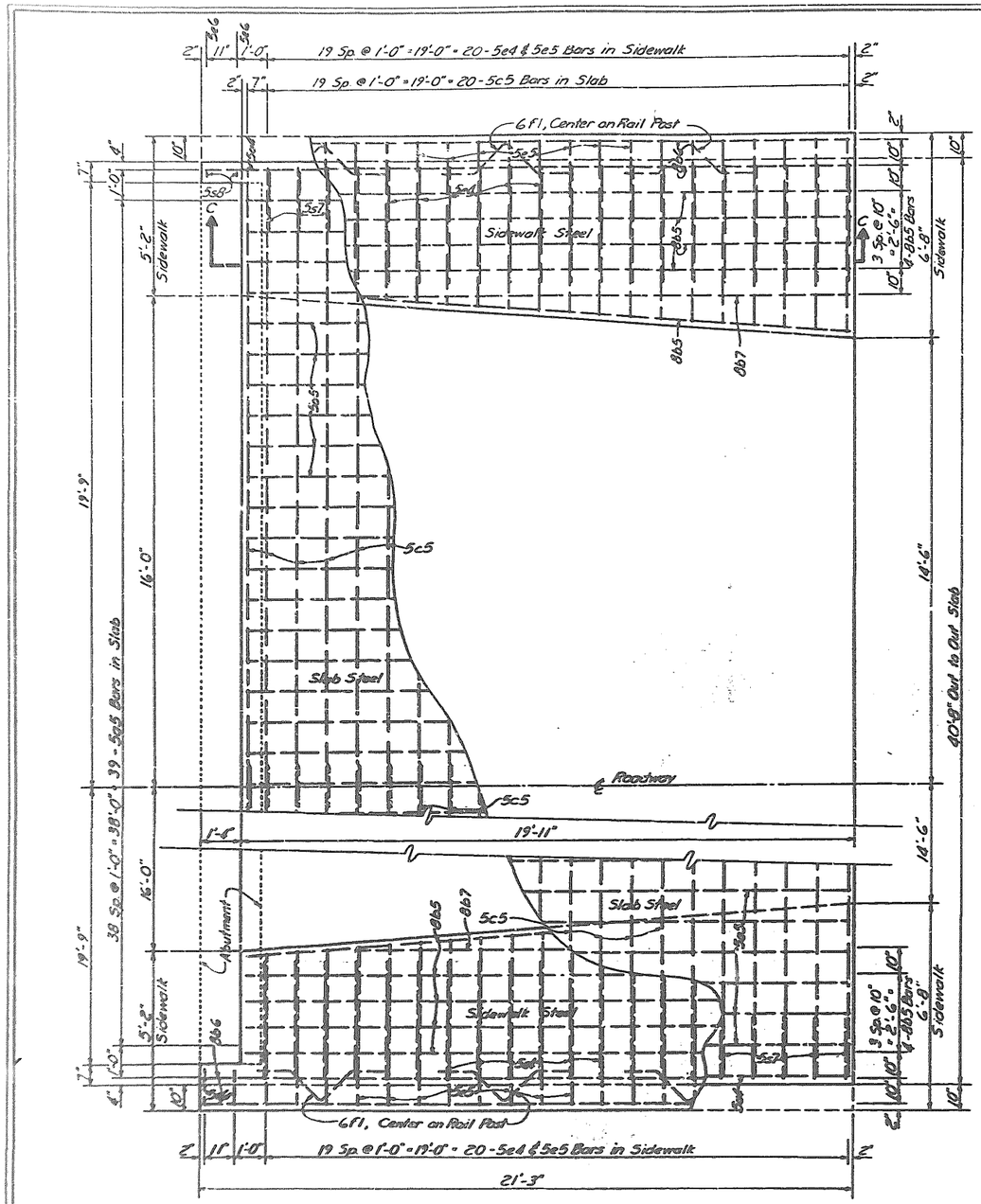

PLAN
Approach Slab

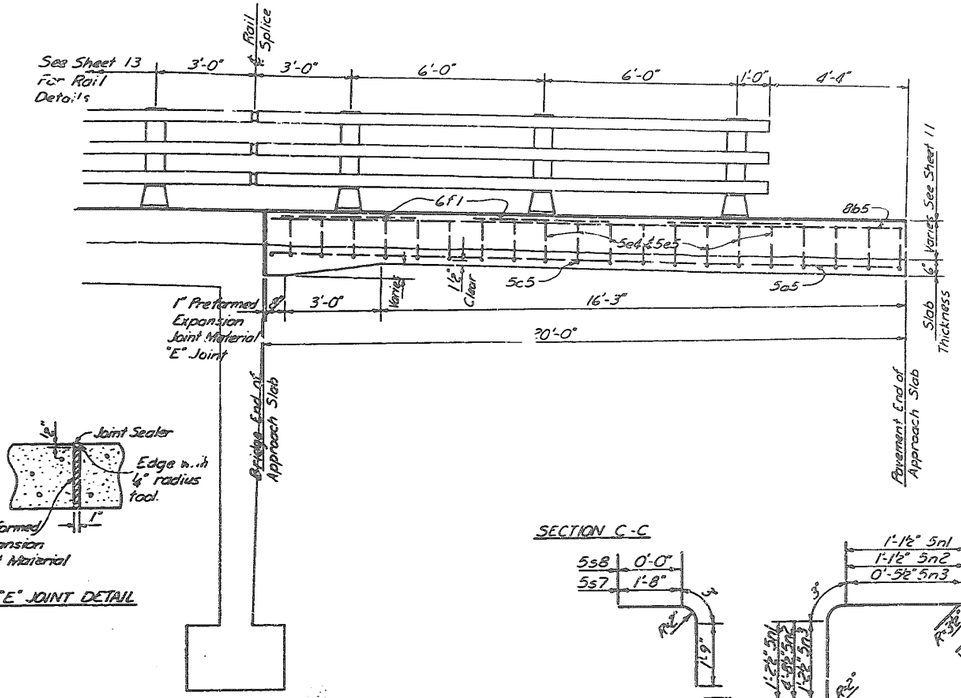

"E" JOINT DETAIL

The concrete used in the bridge approach section shall be placed in accordance with specifications for structural concrete, including vibration.

WINGWALL REINFORCING STEEL

BAR	LOCATION	SHAPE	NO.	LENGTH	WEIGHT
8m1	Wingwall Footing, Longitudinal		16	10'- 8"	456
8m2	Wingwall Footing, Longitudinal		8	12'- 0"	256
8m3	Wingwall Footing, Longitudinal		8	10'- 0"	214
5n1	Wingwall Footing, Transverse Hoops		44	7'-3 1/2"	335
5n2	Wingwall Footing, Transverse Hoops		8	14'-3 1/2"	119
5n3	Wingwall Footing, Transverse Hoops		8	5'-11 1/2"	50
8s1	Wingwall Dowel, Front Face		88	6'- 2"	1,440
5s2	Wingwall Dowel, Back Face		60	4'- 1"	256
8s3	Wingwall, Vertical, Front Face		44	6'- 9"	793
8s4	Wingwall, Vertical, Front Face		44	10'- 7"	1,243
5s5	Wingwall, Vertical, Back Face		32	6'- 9"	225
5s6	Wingwall, Vertical, Back Face		28	10'- 7"	309
5s7	Corner		80	3'- 8"	306
5s8	Corner		8	2'- 0"	17
				Total Wingwall	6,028

APPROACH SLAB REINFORCING STEEL

BAR	LOCATION	SHAPE	NO.	LENGTH	WEIGHT
5a4	Approach Slab, Longitudinal		78	20'-11"	1,637
5a5	Approach Slab, Longitudinal		78	19'- 7"	1,593
8b5	Walk, Longitudinal		20	19'- 7"	1,046
8b6	Walk, Longitudinal		8	20'-11"	447
8b7	Walk, Longitudinal		4	16'- 8"	171
5c5	Approach Slab, Transverse		84	20'-10"	1,825
5e4	Walk, Transverse		80	7'- 8"	584
5e5	Walk, Transverse		80	Varies	563
5e6	Walk, Transverse		8	2'-10"	24
6f1	Rail Post Anchor		12	4'-11"	89
				Total Approach	6,429

SECTION C-C

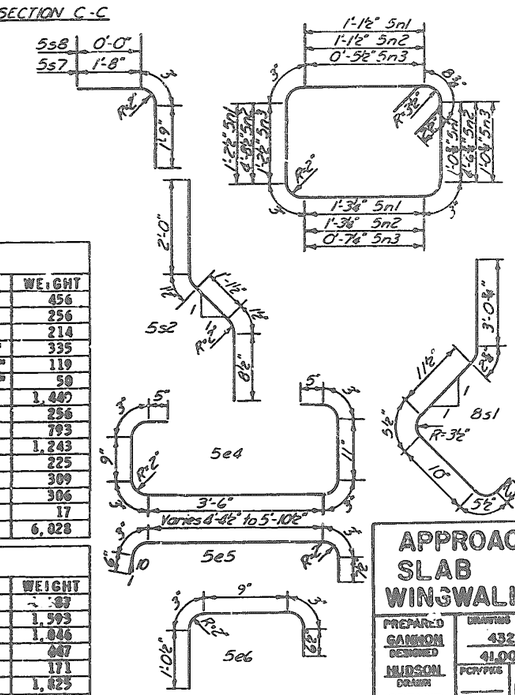

BENT BAR DETAILS
All radii to ℄ bar unless noted.

6470-005P

APPROACH SLAB & WINGWALLS

PREPARED GANNON	DRAWING NO. 432
DESIGNED	41.006A
HUDSON DRAWN	PCN/PKG / SHEET
ORELUP CHECKED	14
JULY 1975 DATE	OF 20

POWERS – WILLIS & ASSOCIATES
IOWA CITY, IOWA

NO.	DATE	BY	REVISIONS	NO.	DATE	BY	REVISIONS	DESIGNED BY	DRAWN BY	CHECKED BY	SCALE	PROJECT TEAM LEADER	BRIDGE DRAWING	DATE	DRAWING NO.
								MRC	EMA		No Scale	Mark Clabaugh	16 of 17	January 2008	

ACTUAL DESIGN FILE : R16-HEHO10(1)100(1)ASB7.DGN
M:\Projects\heho\10(1)100(1)\bridge\Asbuilts\PDF-5P\R16-HEHO10(1)100(1)ASB7.dgn
1:31:29 AM
1/24/2008

AS-BUILT DRAWING (FOR INFORMATION ONLY)

Structure No. 6470-005P

HERBERT HOOVER NATIONAL HISTORIC SITE

REGION	STATE	PROJECT	SHEET NO.
MW	IA	HEHO 10(1) 100(1)	R17

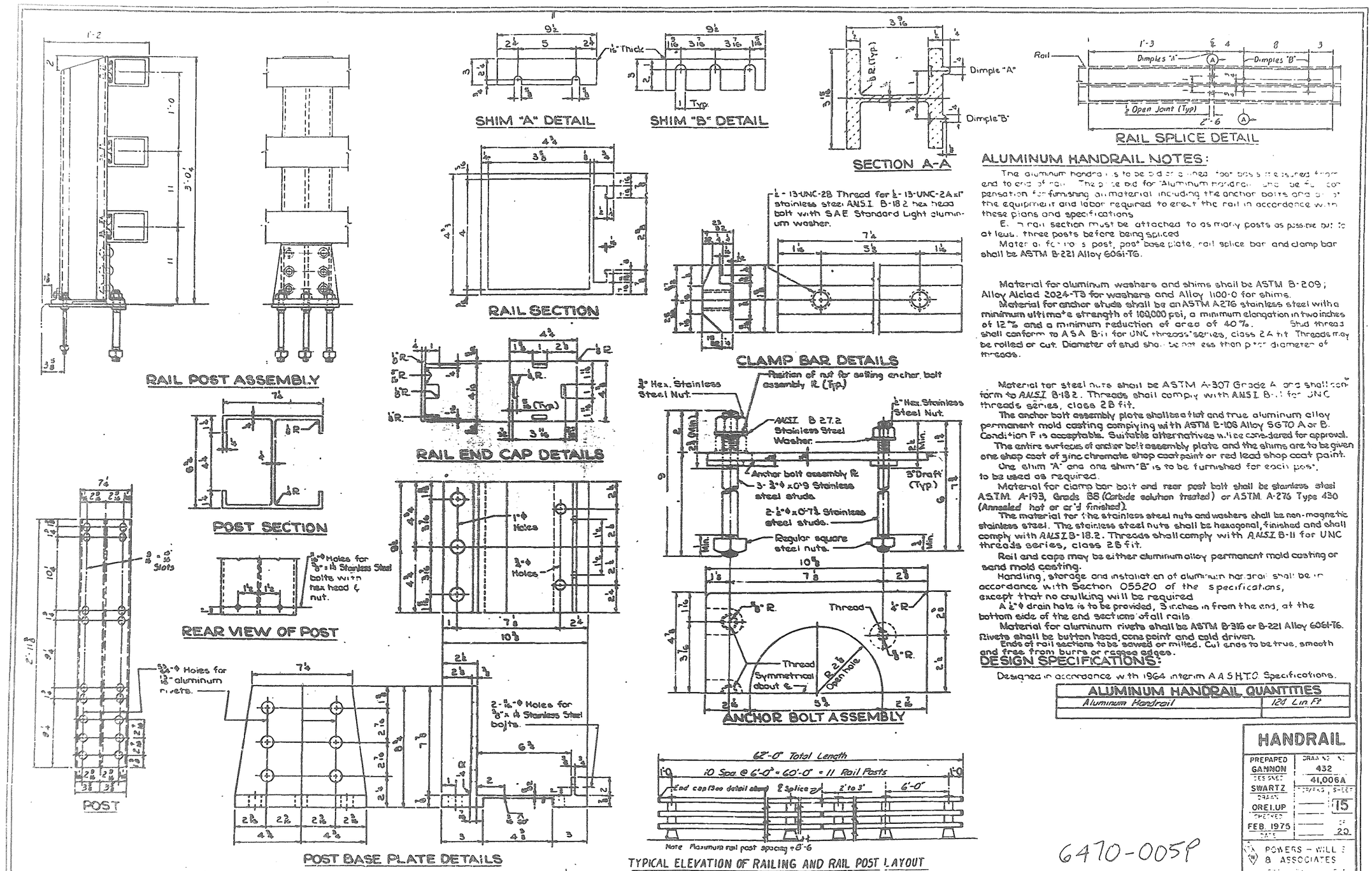

ALUMINUM HANDRAIL NOTES:

The aluminum handrails to be bid on a linear foot basis it is measured from end to end of rail. The price bid for "Aluminum handrail" shall be full compensation for furnishing all material including the anchor bolts and all of the equipment and labor required to erect the rail in accordance with these plans and specifications.

Each rail section must be attached to as many posts as possible but to at least three posts before being spliced.

Material for handrail, post, post base plate, rail splice bar and clamp bar shall be ASTM B-221 Alloy 6061-T6.

Material for aluminum washers and shims shall be ASTM B-209; Alloy Alclad 2024-T3 for washers and Alloy 1100-0 for shims.

Material for anchor studs shall be an ASTM A276 stainless steel with a minimum ultimate strength of 100,000 psi, a minimum elongation in two inches of 12% and a minimum reduction of area of 40%. Stud thread shall conform to ASA B-1 for UNC threads series, class 2A fit. Threads may be rolled or cut. Diameter of stud shall be not less than pitch diameter of threads.

Material for steel nuts shall be ASTM A-307 Grade A and shall conform to ANSI B-18.2. Threads shall comply with ANSI B-1 for UNC threads series, class 2B fit.

The anchor bolt assembly plate shall be a flat and true aluminum alloy permanent mold casting complying with ASTM B-108 Alloy 5G70 A or B. Condition F is acceptable. Suitable alternatives will be considered for approval.

The entire surfaces of anchor bolt assembly plate and the shims are to be given one shop coat of zinc chromate shop coat paint or red lead shop coat paint.

One shim "A" and one shim "B" is to be furnished for each post, to be used as required.

Material for clamp bar bolt and rear post bolt shall be stainless steel ASTM A-193, Grade B8 (Carbide solution treated) or ASTM A-276 Type 430 (Annealed hot or cr'd finished).

The material for the stainless steel nuts and washers shall be non-magnetic stainless steel. The stainless steel nuts shall be hexagonal, finished and shall comply with ANSI B-18.2. Threads shall comply with ANSI B-1 for UNC threads series, class 2B fit.

Rail and caps may be either aluminum alloy permanent mold casting or sand mold casting.

Handling, storage and installation of aluminum handrail shall be in accordance with Section 05520 of the specifications, except that no caulking will be required.

A ½"φ drain hole is to be provided, 3 inches in from the end, at the bottom side of the end sections of all rails.

Material for aluminum rivets shall be ASTM B-316 or B-221 Alloy 6061-T6. Rivets shall be button head, cone point and cold driven.

Ends of rail sections to be sawed or milled. Cut ends to be true, smooth and free from burrs or ragged edges.

DESIGN SPECIFICATIONS:

Designed in accordance with 1964 interim A.A.S.H.T.O. Specifications.

ALUMINUM HANDRAIL QUANTITIES	
Aluminum Handrail	124 Lin. Ft

HANDRAIL	
PREPARED GANNON	DRAWING NO. 432
DESIGNED SWARTZ	41,006A
DRAWN OREL UP	SHEET 15
CHECKED FEB. 1975	OF 20
DATE	

POWERS – WILLIS & ASSOCIATES

6470-005P

NO.	DATE	BY	REVISIONS	NO.	DATE	BY	REVISIONS	DESIGNED BY	DRAWN BY	CHECKED BY	SCALE	PROJECT TEAM LEADER	BRIDGE DRAWING	DATE	DRAWING NO.
								MRC	EMA		No Scale	Mark Clabaugh	17 of 17	January 2008	

ACTUAL DESIGN FILE : R17-HEHO10(1)100(1)ASB8.DGN
1/24/2008 1:31:49 AM M:\Projects\heho\01\100\1\bridge\Asbuilts\PDF-5PVR17-HEHO10(1)100(1)ASB8.dgn

REG	STATE	PROJECT	SHEET NO.
MW	IA	HEHO 10(1), 100(1)	S1

NOTE:

1. Use drainage ditch installation for low flow conditions only when specified on Erosion Control Plan.
2. Alternate preassembled silt fence options (geotextile, type V-B) will be allowed as long as specified dimensions are satisfied. Follow manufacturer's recommendations for installation procedures. All types must ensure silt fence remains attached to, and does not slide down, supporting posts.
3. Install silt fence along ground contours. Curve ends of silt fence upgrade to prevent water from running around the ends.
4. 10 ft. (max.) spacing with fence support.
   6 ft. (max.) spacing without fence support.

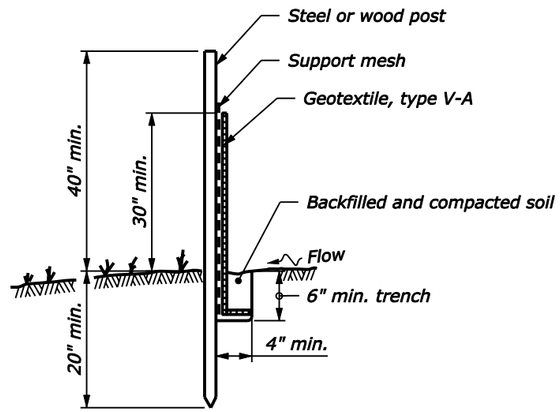

POST AND GEOTEXTILE INSTALLATION DETAIL

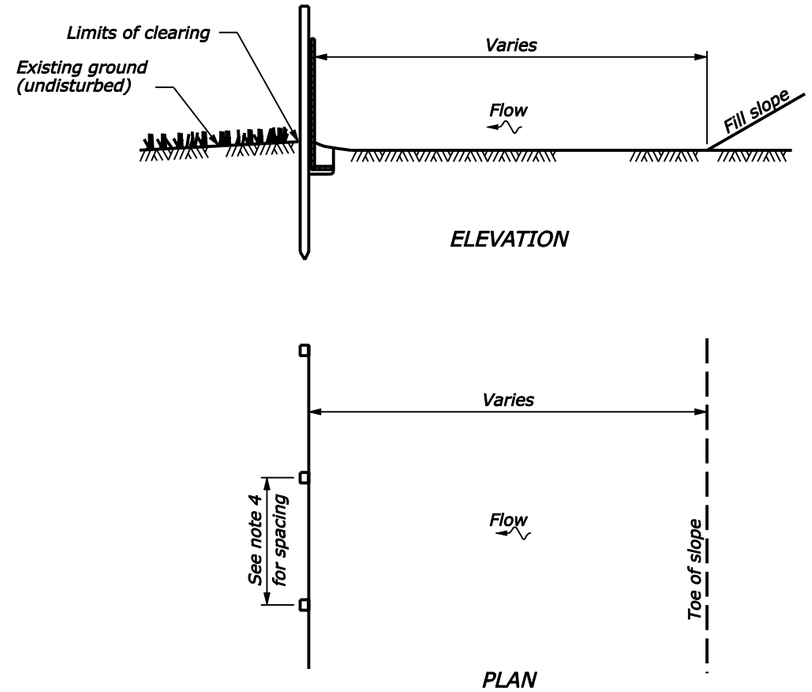

SILT FENCE INSTALLATION AT TOE OF FILL

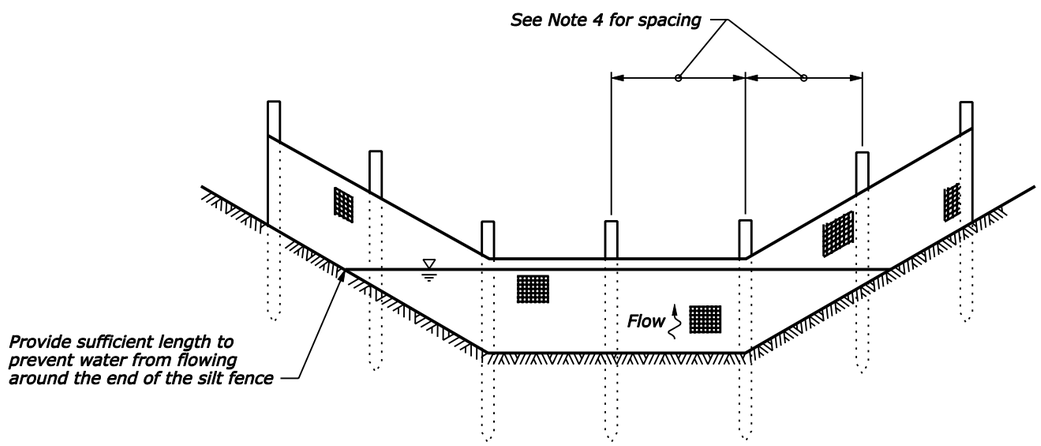

SILT FENCE INSTALLATION IN A DRAINAGE DITCH

See Note 1

NO SCALE

U.S. DEPARTMENT OF TRANSPORTATION
FEDERAL HIGHWAY ADMINISTRATION
FEDERAL LANDS HIGHWAY

U.S. CUSTOMARY STANDARD

SILT FENCE

STANDARD APPROVED FOR USE 6/2005

REVISED:
DRAFT: 10/2006

STANDARD
157-1

1/28/2008 9:01:02 AM M:\Projects\heho\0110(1)\pro_dev\CADD\Std-Det\S1st570.dgn

REG	STATE	PROJECT	SHEET NO.
MW	IA	HEHO 10(1), 100(1)	S2

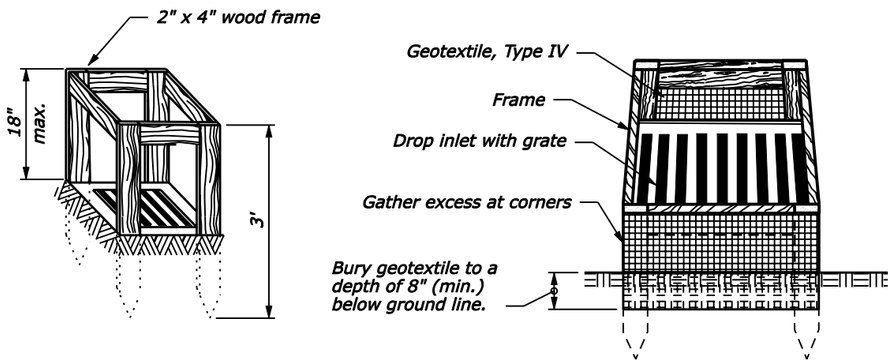

SILT FENCE DROP INLET PROTECTION (TYPE A)

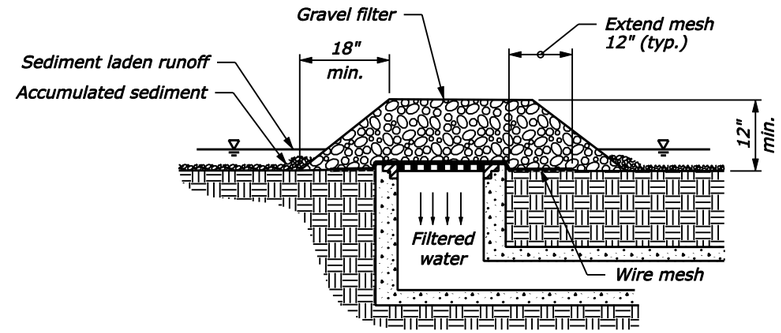

GRAVEL AND WIRE MESH DROP INLET PROTECTION (TYPE B)

NOTE:

1. For gravel filters use 2" - 3" diameter coarse aggregate.
2. Use wire mesh with ½" x ½" openings.
3. Use Type A inlet protection in sump locations only.
4. Use Type B inlet protection only in sump locations where heavy concentrated flows are not expected. Do not use where ponding around the structure might cause inconvenience or damage.

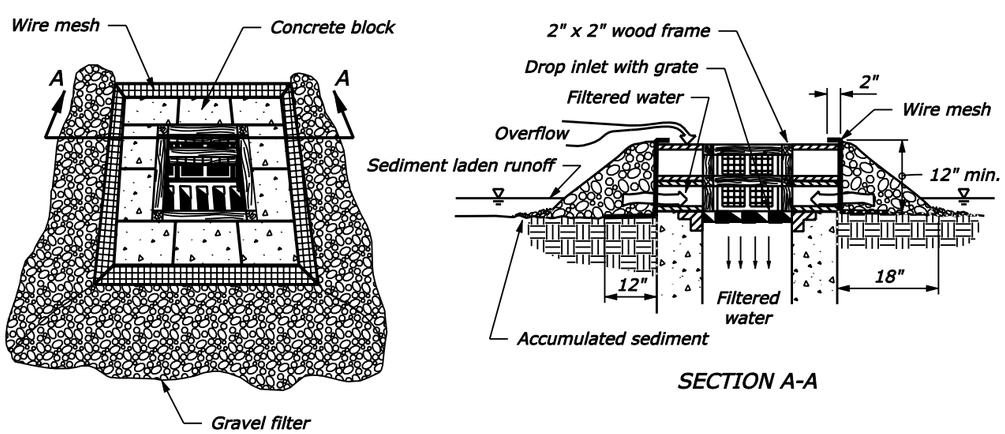

SECTION A-A

BLOCK AND GRAVEL DROP INLET PROTECTION (TYPE C)

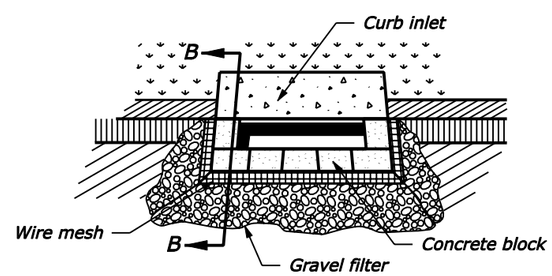

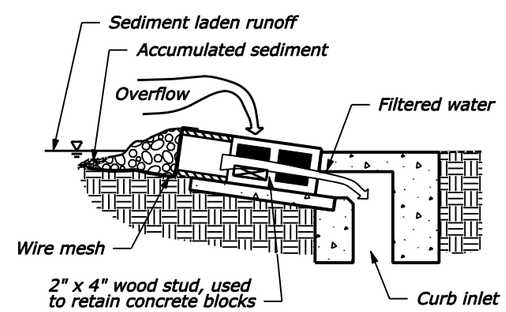

SECTION B-B

CURB INLET PROTECTION, BLOCK AND GRAVEL (TYPE D)

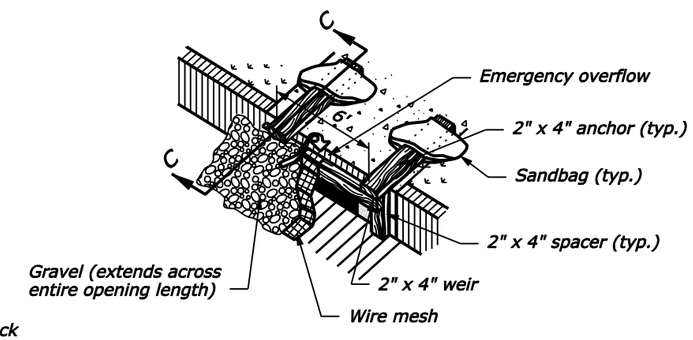

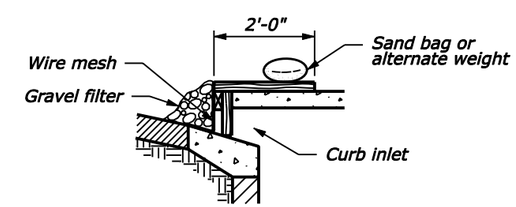

SECTION C-C

CURB INLET PROTECTION, WOODEN WEIR (TYPE E)

NO SCALE

U.S. DEPARTMENT OF TRANSPORTATION
FEDERAL HIGHWAY ADMINISTRATION
FEDERAL LANDS HIGHWAY

U.S. CUSTOMARY STANDARD

TEMPORARY INLET PROTECTION

STANDARD APPROVED FOR USE 6/2005

REVISED:

STANDARD 157-2

$DATE$
9/02/09 AM M:\Projects\Vete\ND1\001\proj_dir\CADD\Std-Det\S2st15702.dgn
1/28/2008 $PATH$

REG	STATE	PROJECT	SHEET NO.
MW	IA	HEHO 10(1), 100(1)	S3

DEPTH (d)	
Riprap Class	Depth (d)-(in)
1	12
2	18
3	24
4	30
5	42
6	48

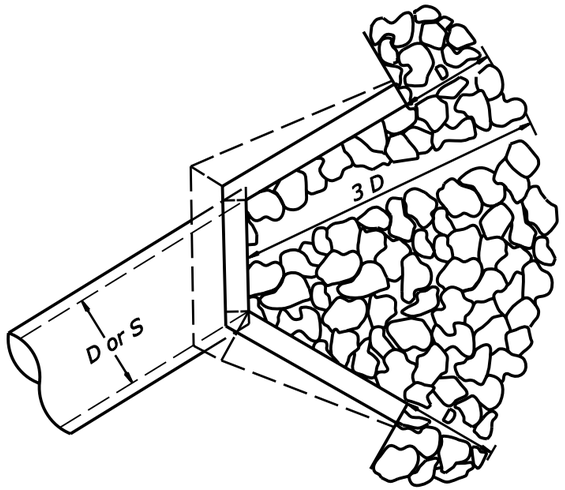

PLAN

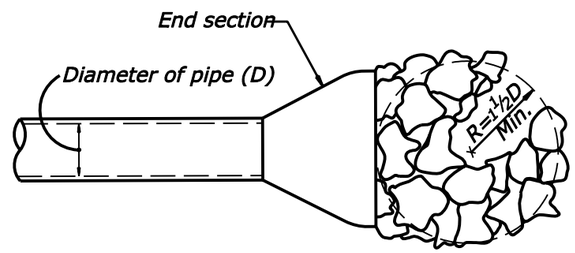

PLAN

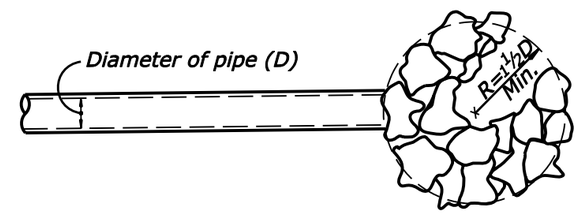

PLAN

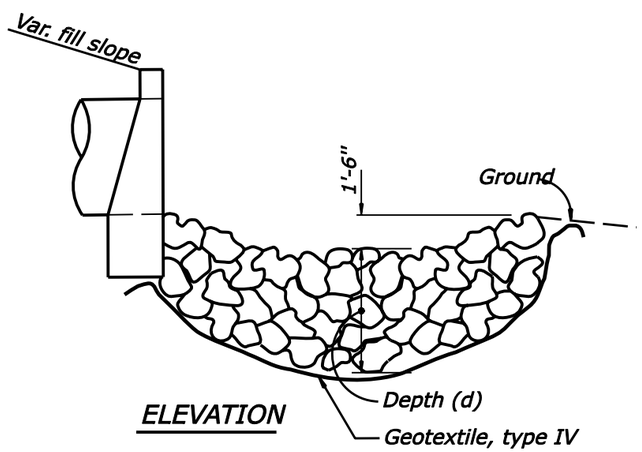

ELEVATION

CULVERT WITH HEADWALL

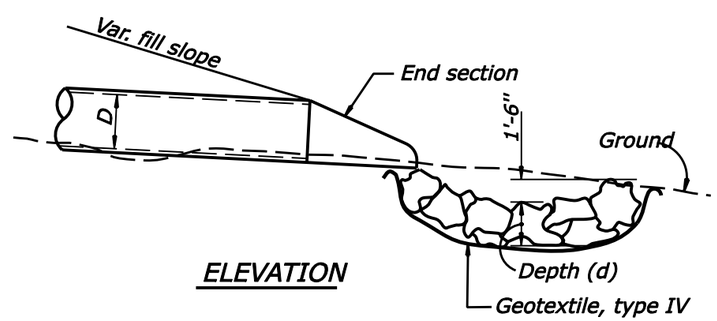

ELEVATION

CULVERT WITH END SECTION

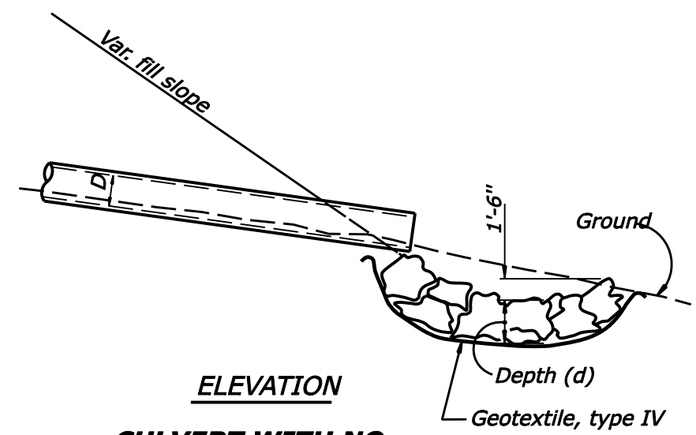

ELEVATION

CULVERT WITH NO END TREATMENT

NOTE:
For arch or elliptical pipes, use equivalent diameter for (D) dimension

NO SCALE

U.S. DEPARTMENT OF TRANSPORTATION
FEDERAL HIGHWAY ADMINISTRATION
EASTERN FEDERAL LANDS HIGHWAY DIVISION
STERLING, VIRGINIA

U.S. CUSTOMARY DETAIL

LOOSE RIPRAP AT CULVERT

DETAIL APPROVED FOR USE
REVISED: 05/07

DETAIL
E251-01

1/28/2008 9:02:43 AM M:\Projects\hehoVDIH001\Proj_dev\CADD\Std-Det\S3 dt2500.dgn

REG	STATE	PROJECT	SHEET NO.
MW	IA	HEHO 10(1), 100(1)	S4

NOTE:

1. Drill holes for the dowels and tie bars simultaneously to the required depth using frame mounted drills which will maintain the drills parallel to profile and longitudinal joint.
2. See Standard 501-4 for pavement repair saw cuts for lift-out method.
3. Orient wire mesh so that the 12-inch dimension parallels the existing longitudinal joint.
4. An approved two-piece longitudinal tie device may be used in lieu of the #5 tie bars.
5. See Standard 501-1 for reinforcement for full depth concrete pavement repair.

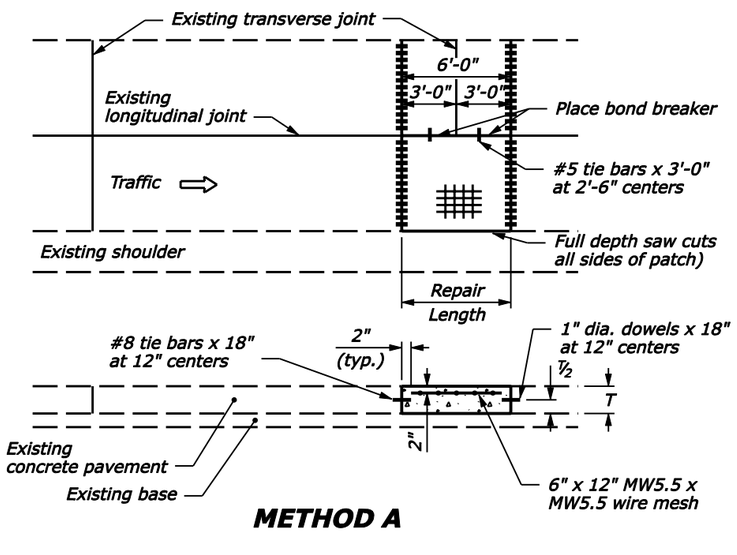

METHOD A

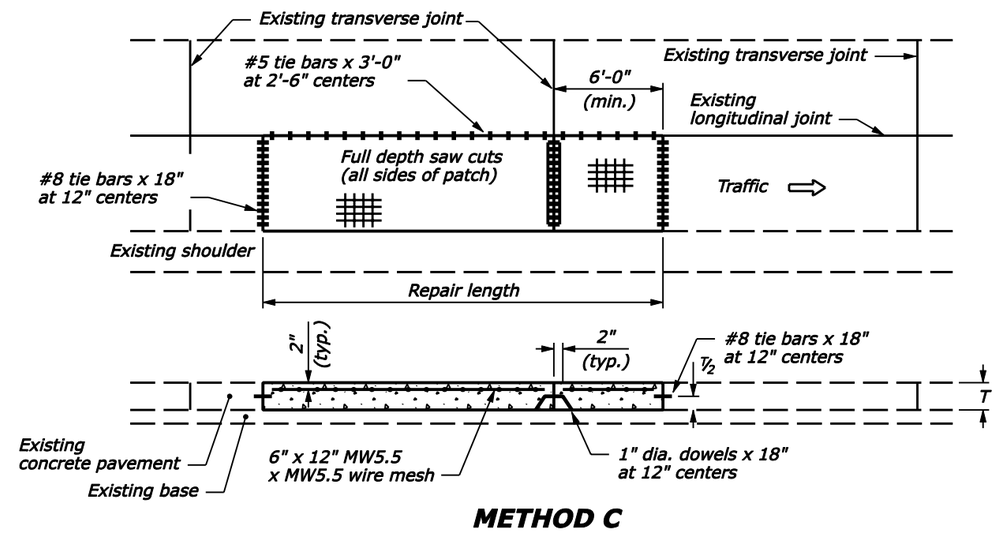

METHOD C

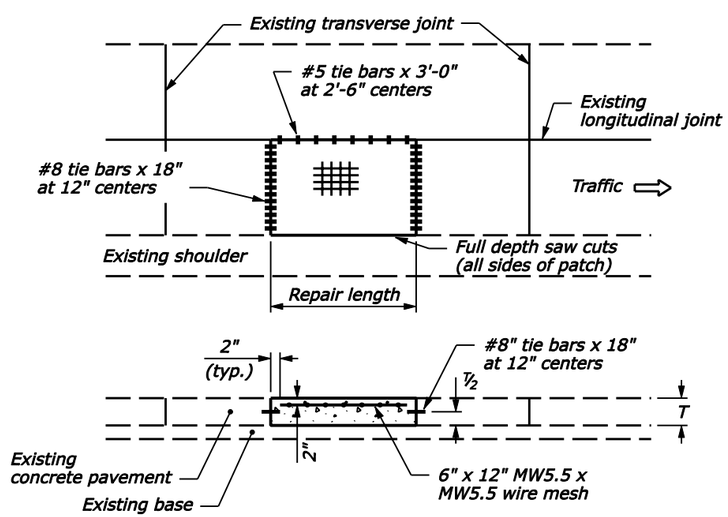

METHOD B

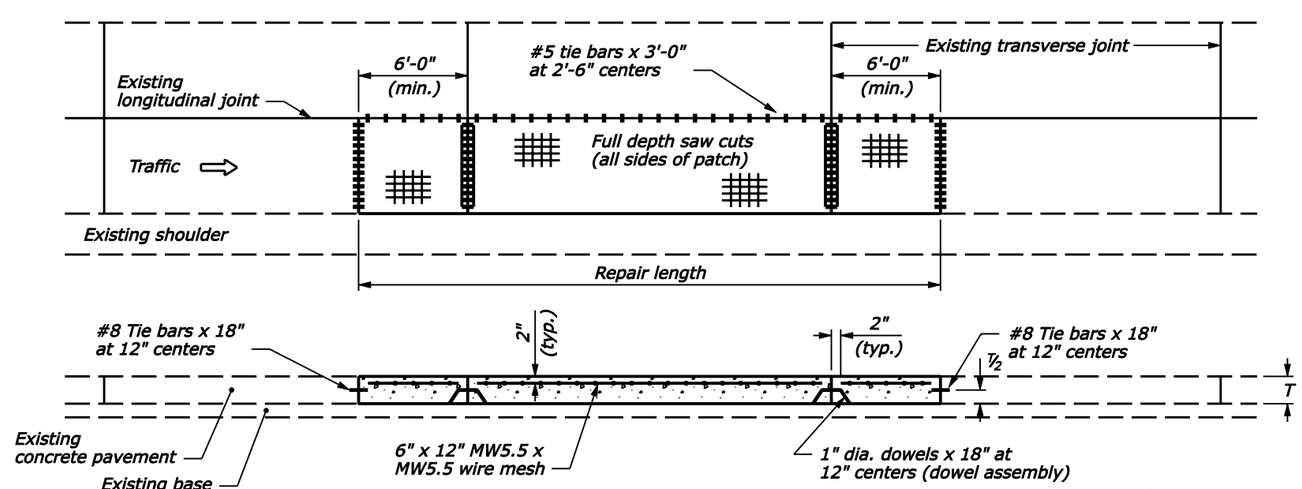

METHOD D

NO SCALE

U.S. DEPARTMENT OF TRANSPORTATION
FEDERAL HIGHWAY ADMINISTRATION
FEDERAL LANDS HIGHWAY

U.S. CUSTOMARY STANDARD

CONCRETE PAVEMENT PATCHING

STANDARD APPROVED FOR USE --/----
REVISED:
DRAFT: 9/2004

STANDARD 501-3

1/28/2008 9:03:52 AM M:\Projects\hehO\HI001\proj_dev\CADD\Std-Det\S4 st50103.dgn

REG	STATE	PROJECT	SHEET NO.
MW	IA	HEHO 10(1), 100(1)	S4a

NOTE:

1. Shoulder joints may be cut directly into the existing joint.
2. Make cuts running parallel and adjacent to a lane of traffic a minimum of 2 inches from the existing joint.
3. Saw cuts may be made into the shoulder.
4. If it is determined that the keyway is formed in the adjacent pavement section, the subsequent full depth saw cut may be made on the longitudinal joint.

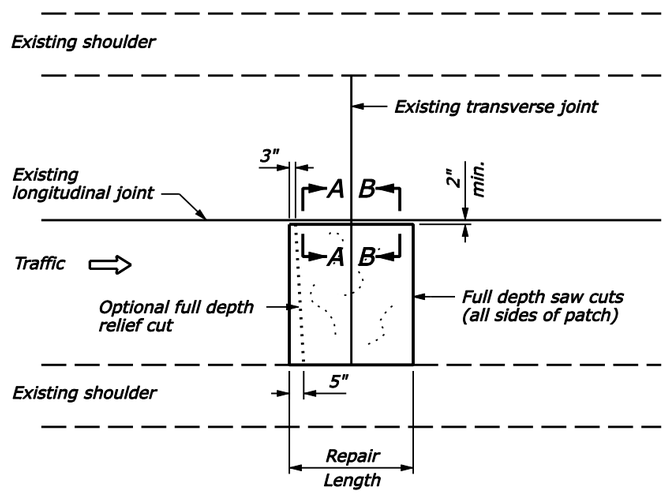

PLAN

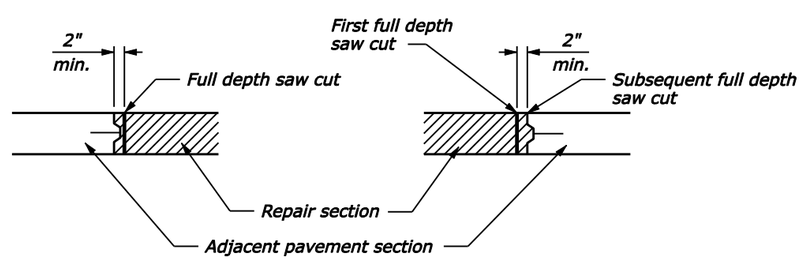

SECTION A-A
KEYWAY IN REPAIR SECTION

SECTION B-B
KEYWAY IN ADJACENT PAVEMENT SECTION

REINFORCED PORTLAND CEMENT CONCRETE PAVEMENT SAW CUTS FOR LIFT OUT METHOD

NO SCALE

U.S. DEPARTMENT OF TRANSPORTATION
FEDERAL HIGHWAY ADMINISTRATION
FEDERAL LANDS HIGHWAY

U.S. CUSTOMARY STANDARD

CONCRETE PAVEMENT REMOVAL METHODS

STANDARD APPROVED FOR USE --/----
REVISED:
DRAFT: 9/2004

STANDARD 501-4

REG	STATE	PROJECT	SHEET NO.
MW	IA	HEHO 10(1), 100(1)	S5

CONCRETE ROUND PIPE CULVERT

FILL HEIGHT AND PIPE CLASS TABLE

PIPE SIZE DIAMETER INCHES	MINIMUM COVER INCHES	EMBANKMENT CLASS II	EMBANKMENT CLASS III	EMBANKMENT CLASS IV	EMBANKMENT CLASS V	TRENCH CLASS II	TRENCH CLASS III	TRENCH CLASS IV	TRENCH CLASS V
		MAXIMUM FILL HEIGHT ABOVE TOP OF PIPE IN FEET							
12	12	11	11	16	23	18	18	26	37
18	12	10	10	25	39	14	14	31	45
24	12	11	11	15	31	15	15	22	40
30	12	9	13	16	35	13	17	20	46
36	12	9	9	20	41	11	14	26	56
48	12	12	14	26	44	16	17	31	50
60	12	15	17	28	44	15	20	32	50
72	12	13	17	31	41	16	20	35	49
84	12	13	19	31		15	23	37	
96	12	13	20			16	24		
108	12	16	20			19	26		

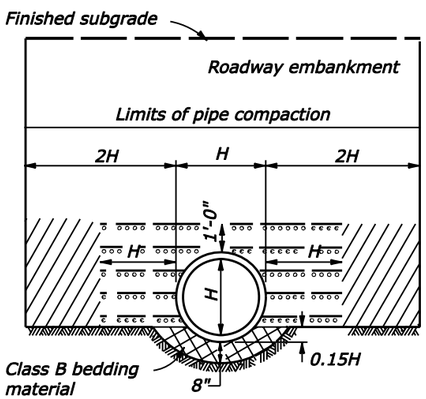

EMBANKMENT INSTALLATION

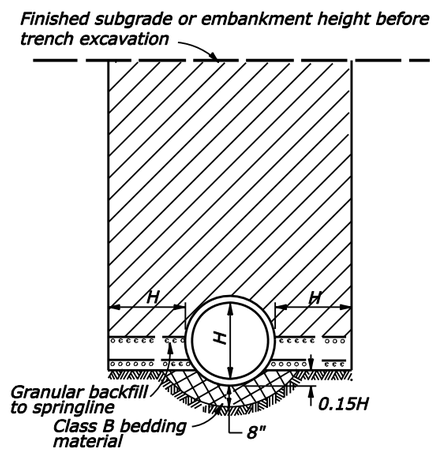

TRENCH INSTALLATION

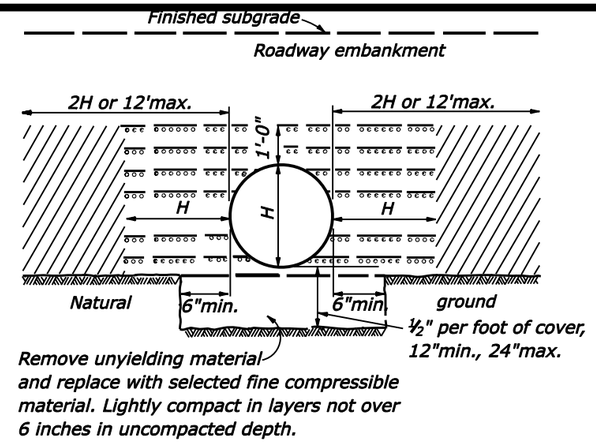

ON UNYIELDING MATERIAL

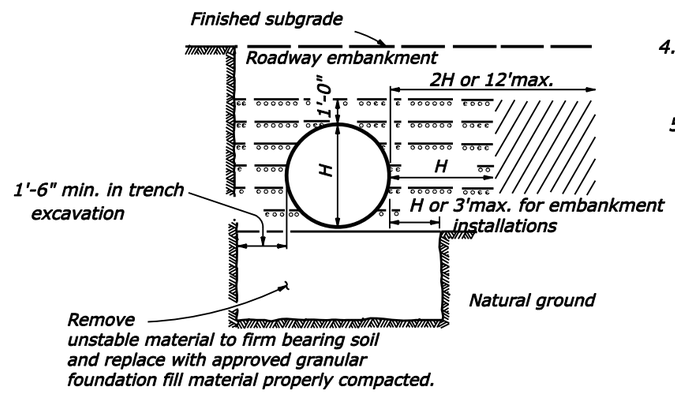

ON UNSTABLE MATERIAL

NOTE:

1. When directed, camber pipe culverts upward from a chord through the inlet and outlet inverts an ordinate amount equal to 1% of the pipe length. Develop camber on a parabolic curve. If the midpoint elevation on the parabolic curve as designed exceeds the elevation of the inlet invert, reduce the amount of camber or increase the pipe culvert gradient.
2. Measure minimum cover from the top of the pipe culvert to the subgrade for flexible pavements, and to the top of the pavement for rigid pavements. Measure maximum fill height from the top of the pipe to the top of the pavement for both flexible and rigid pavements.
3. Pipe compaction limits shown are for pipe installation in an embankment. For pipe installation in a trench, the compaction limits shall be the walls of the trench.
4. When grades exceed 10%, install supplemental concrete pipe ties on pipe culvert or install bell and spigot pipe.
5. Maximum fill heights for pipe culvert installations may be increased on approval of site-specific structural pipe designs meeting the criteria of AASHTO Standard Specifications for Highway Bridges.

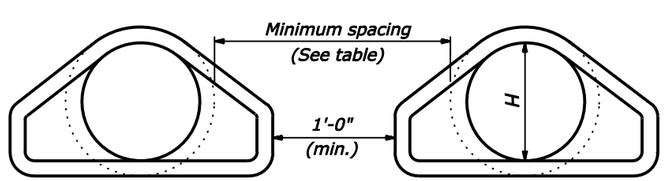

MINIMUM SPACING		
DIAMETER INCHES	EMBANKMENT	TRENCH
12-36	15"	2H
36-96	H/2	72"
OVER 96	48"	72"

MULTIPLE ROUND PIPE INSTALLATION

LEGEND:

- Bedding material
- Embankment material placed in layers not exceeding 6" compacted depth.
- Approved granular material or fine compactable soil placed in layers not exceeding 6" compacted depth.

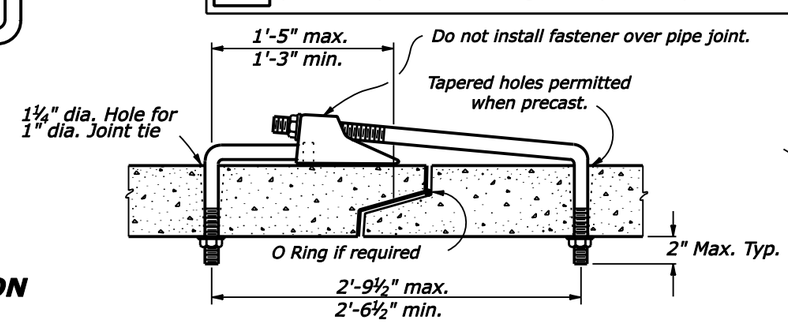

SUPPLEMENTAL CONCRETE PIPE TIE

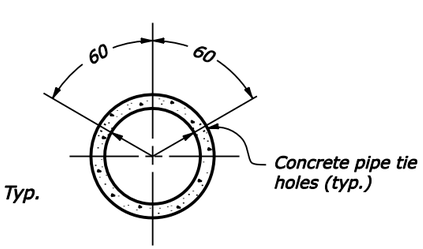

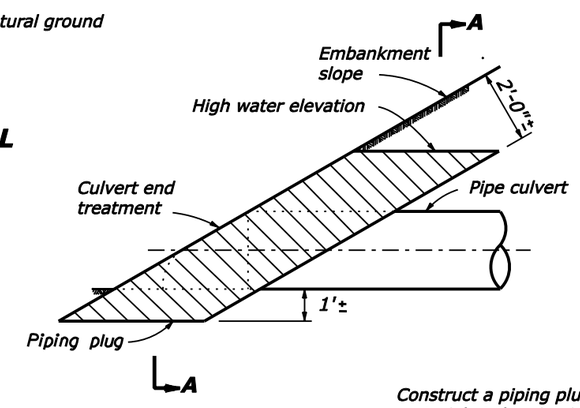

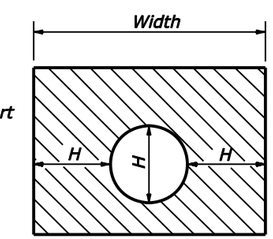

SECTION A-A

Construct a piping plug of impermeable backfill material at the pipe inlet where granular material is used for backfill. Width may be adjusted to tie into impervious material.

PIPING PLUG

NO SCALE

U.S. DEPARTMENT OF TRANSPORTATION
FEDERAL HIGHWAY ADMINISTRATION
EASTERN FEDERAL LANDS HIGHWAY DIVISION
STERLING, VIRGINIA

U.S. CUSTOMARY DETAIL

CONCRETE PIPE CULVERT INSTALLATION

DETAIL APPROVED FOR USE 02/2007

REVISED: 04/02 904/07

DETAIL E602-07

1/28/2008 9:05:58 AM N:\Projects\Hehoo\Dll\100(1)\proj_dev\CADD\Std-Det\S5 st60207.dgn

REG	STATE	PROJECT	SHEET NO.
MW	IA	HEHO 10(1), 100(1)	S6

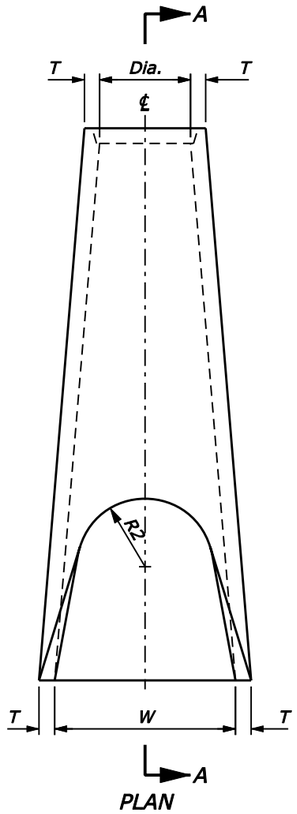

PLAN

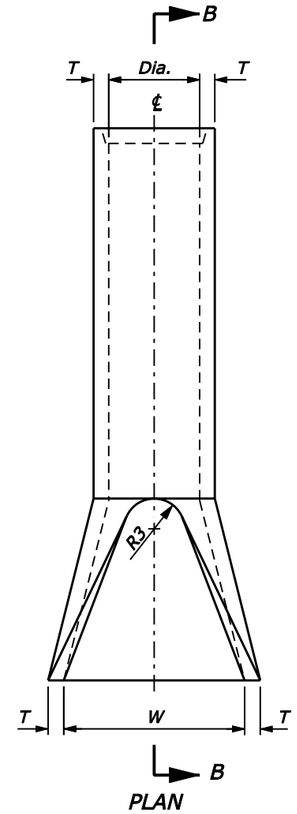

PLAN

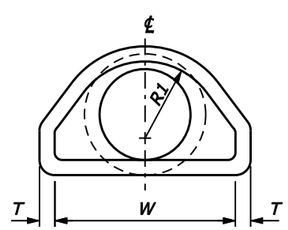

ELEVATION

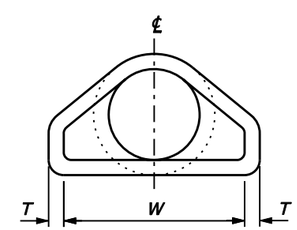

ELEVATION

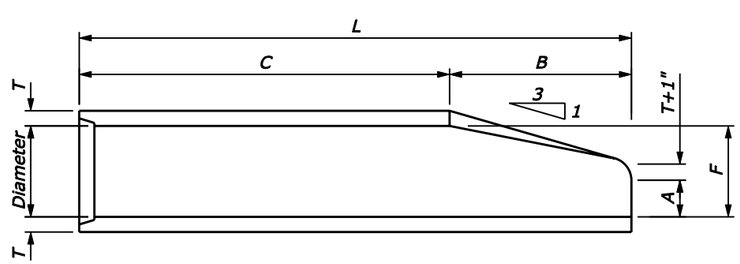

SECTION A-A

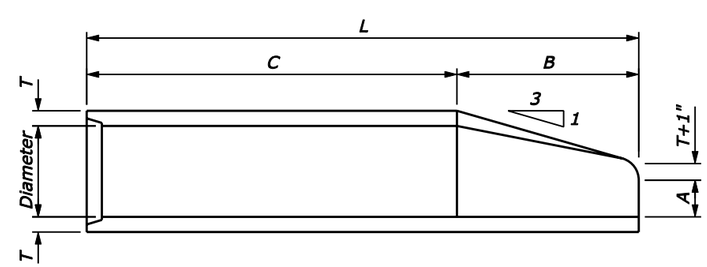

SECTION B-B

NOTE:

1. Variations in design and dimensions are permitted to allow for manufacturer's standards.
2. Fabricate the outlet end section with a groove end and the inlet end section with a tongue end.
3. Warp embankment slopes to match the slope of the flared end section.

END SECTIONS FOR ROUND PIPE CULVERT

PIPE SIZE DIAMETER INCHES	DIMENSIONS INCHES									
	T	A	B	C	L	W	F	R1	R2	R3
12	2	4	24	48⅞	72⅞	24	13	10⅛	9	4
15	2¼	6	27	46	73	30	16	12½	11	6
18	2½	9	27	46	73	36	19	15½	12	7½
21	2¾	9	36	37	73	42	22	16½	13	5
24	3	9½	43½	30	73½	48	25	16¾	14	8
27	3¼	10½	48	25½	73½	54	28	--	14½	9
30	3½	12	54	19¾	73¾	60	31	18½	15	8
33	3¾	13½	59½	37½	96	66	34	23¾	17½	9
36	4	15	63	33	96	72	37	23¼	20	11
42	4½	21	63	33	96	78	43	--	22	11
48	5	24	72	24	96	84	49	--	22	12

NO SCALE

U.S. DEPARTMENT OF TRANSPORTATION
FEDERAL HIGHWAY ADMINISTRATION
FEDERAL LANDS HIGHWAY

U.S. CUSTOMARY STANDARD

CONCRETE END SECTION FOR ROUND PIPE

STANDARD APPROVED FOR USE 12/1993
REVISED: 4/1994 6/2005

STANDARD 602-8

1/28/2008 9:06:27 AM M:\Projects\HEHO\10(1)\001\proj_dir\CADD\Std-Det\S6 st60208.dgn

REG	STATE	PROJECT	SHEET NUMBER
MW	IA	HEHO 10(1), 100(1)	S7

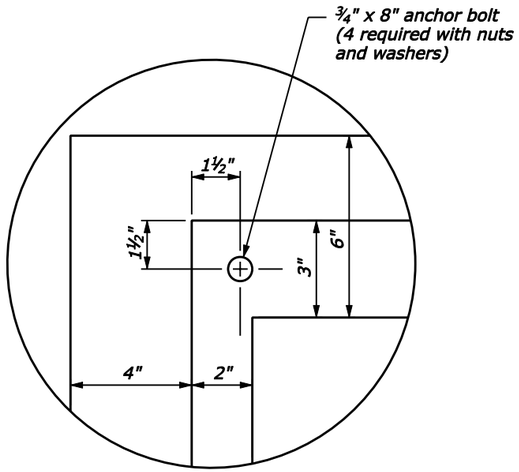

DETAIL A

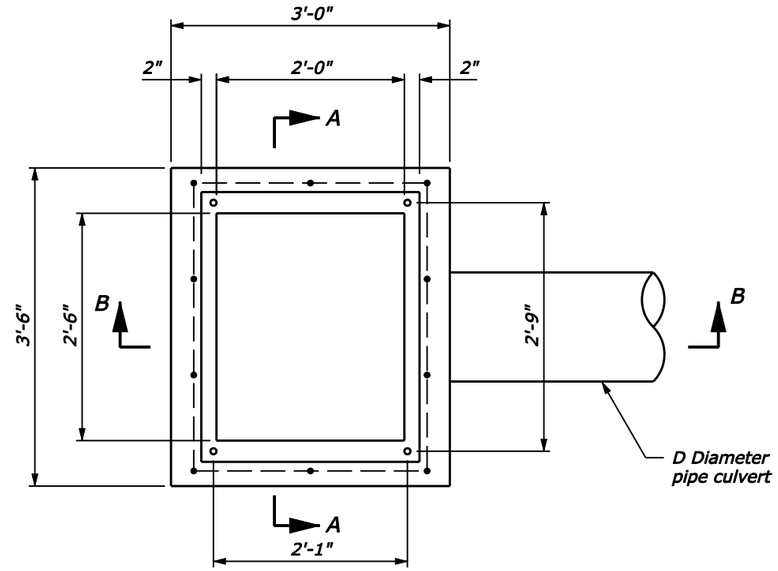

PLAN

NOTE:

1. All reinforcing bars are #5 placed a minimum 1½" clear from face of concrete, In floors, place bars on 6 inch centers each way. In walls, place horizontal bars in 6 inch centers and vertical bars on 12 inch centers.
2. Curb shape shown for illustration only. Actual curb shape and dimensions are shown in the plans.
3. See Standard 604-6 for Frame and Grate Details.
4. If guardrail post location results in guardrail penetrating the culvert, eliminate the post and place additional nested W-beam rail sections per Standard 617-24.

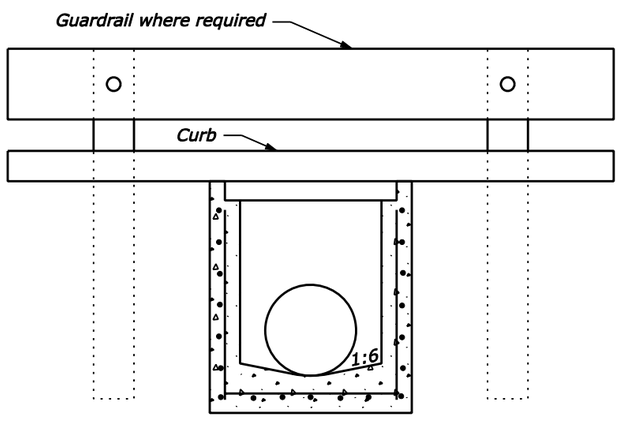

SECTION A-A

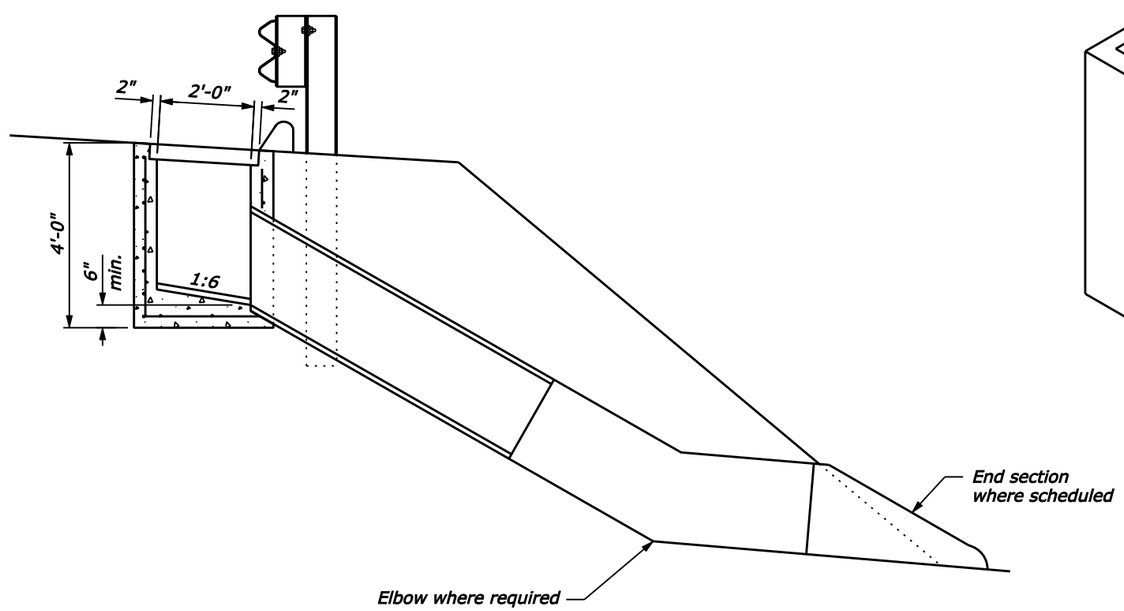

SECTION B-B

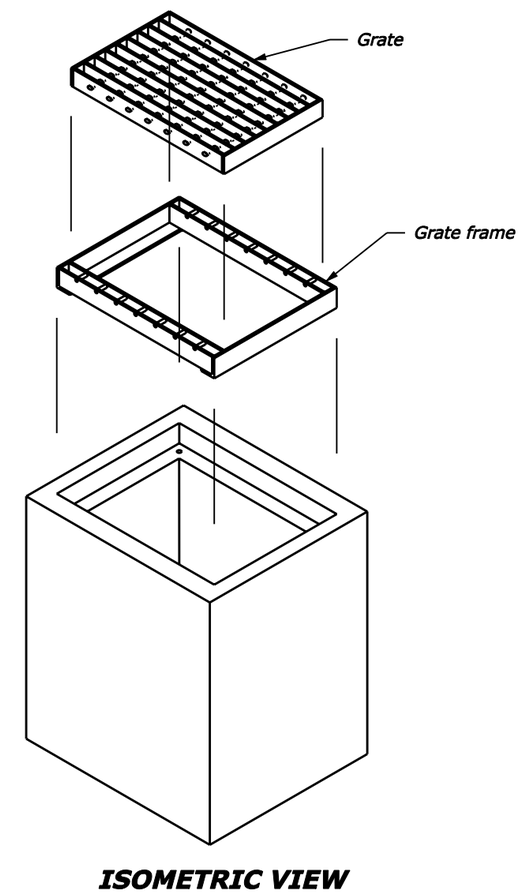

ISOMETRIC VIEW

NO SCALE

U.S. DEPARTMENT OF TRANSPORTATION
FEDERAL HIGHWAY ADMINISTRATION
FEDERAL LANDS HIGHWAY

U.S. CUSTOMARY STANDARD

INLET
TYPE 5A

Sheet 1 of 2

STANDARD APPROVED FOR USE 6/2005

REVISED:

STANDARD
604-5

$DATE$

$PATH$

...\CADD\Std-Det\S7 st60405.dgn 1/28/2008 9:07:32 AM

REG	STATE	PROJECT	SHEET NUMBER
MW	IA	HEHO 10(1), 100(1)	S8

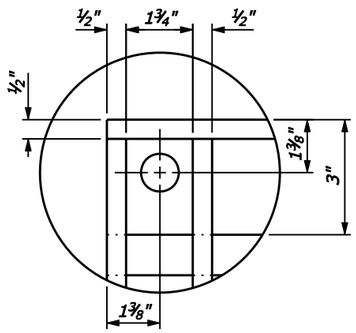

DETAIL B

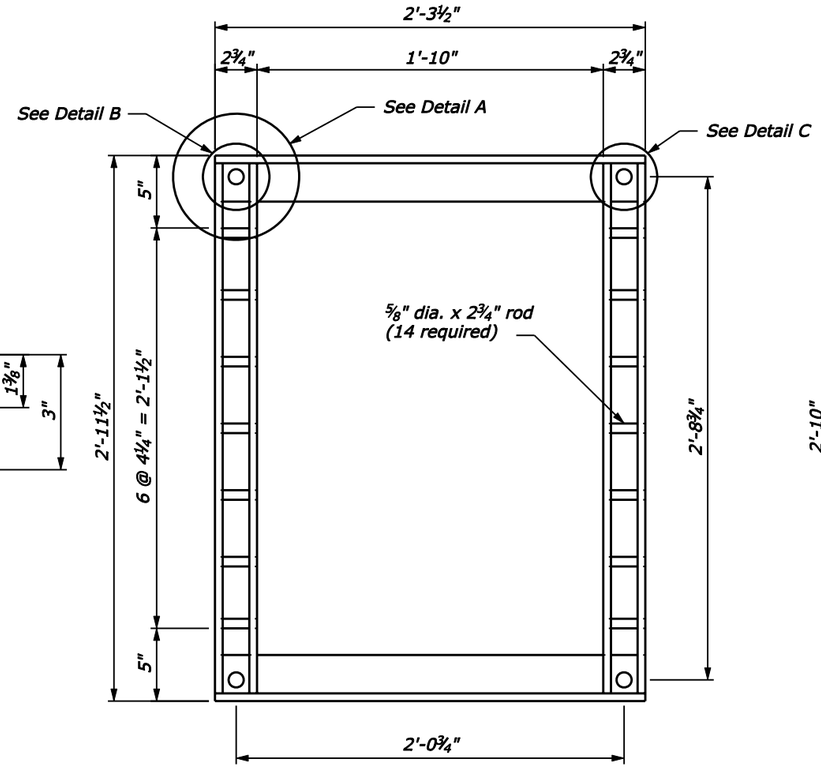

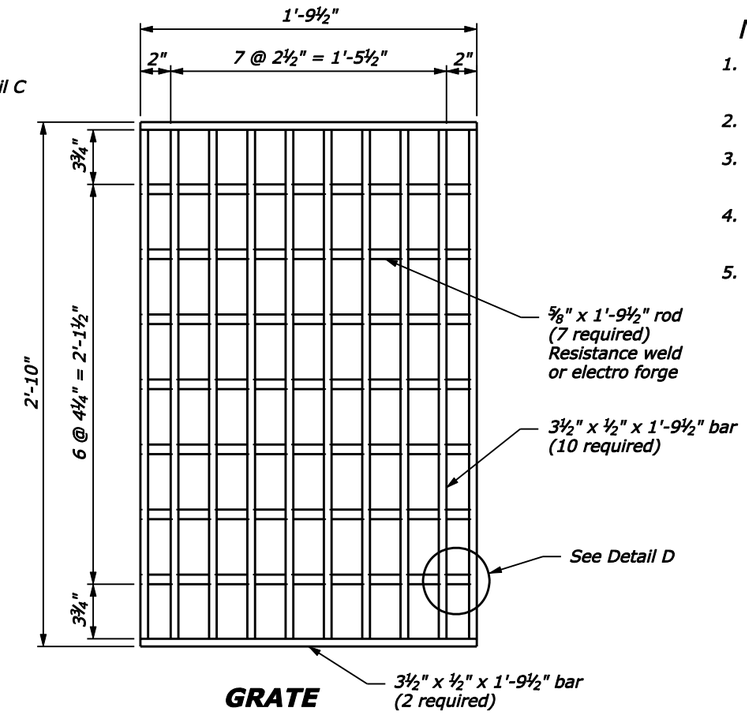

GRATE

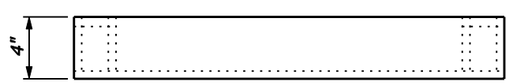

GRATE FRAME

NOTE:

1. Hot dip galvanize all metal parts for frame and grate after fabrication.
2. Fabricate frame and grate from structural steel.
3. Furnish four ¾" x 8" anchor bolts with nuts to attach frame to inlet.
4. Cut holes 3½" x ½" bar as required to place ⅝ inch diameter rods.
5. Spot weld ⅝ inch diameter rods for frame and grate to 3½" x ½" bars.

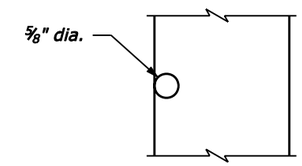

SECTION A-A

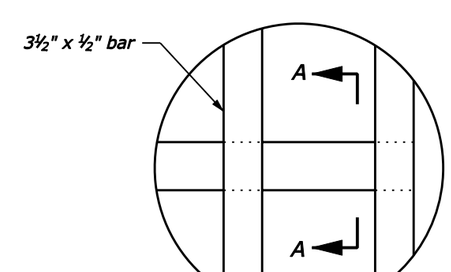

DETAIL D

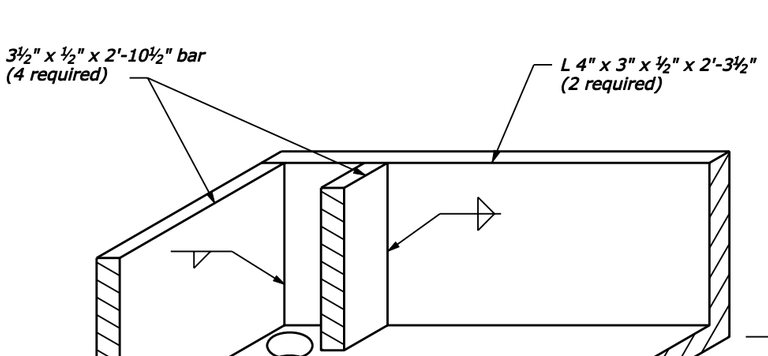

DETAIL A
(OBLIQUE)

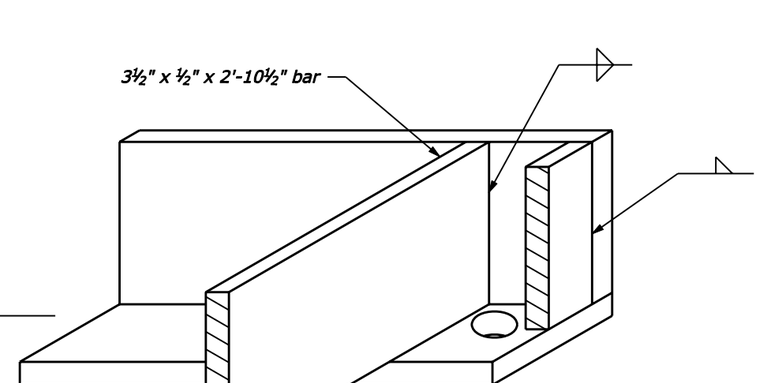

DETAIL C
(OBLIQUE)

NO SCALE

U.S. DEPARTMENT OF TRANSPORTATION
FEDERAL HIGHWAY ADMINISTRATION
FEDERAL LANDS HIGHWAY

U.S. CUSTOMARY STANDARD

FRAME AND GRATE
TYPE 5A

Sheet 2 of 2

STANDARD APPROVED FOR USE 6/2005
REVISED:

STANDARD
604-6

$DATE$
$PATH$

...\CADD\Std-Det\S8 st60406.dgn 1/28/2008 9:08:20 AM

REG	STATE	PROJECT	SHEET NO.
MW	IA	HEHO 10(1), 100(1)	S9

LENGTH AND SPACING TABLE

APPROACH SPEED*	LENGTH OF BUFFER SPACE	CHANNELIZING DEVICE		
		TAPER AREA	BUFFER SPACE	WORK SPACE
MPH	FEET	SPACING IN FEET		
25	155	20	50	50
30	200	20	60	60
35	250	20	70	70
40	305	20	80	80
45	360	20	90	90
50	425	20	100	100
55	495	20	110	110

* Approach speed based on the regulatory posted speed, not the advisory speed.

SIGN SPACING TABLE

ROAD TYPE	DISTANCE BETWEEN SIGNS IN FEET		
	A	B	C
Urban 40 MPH and less	100	100	100
Urban 45 MPH and greater	350	350	350
Rural	500	500	500
Expressway/Freeway	1000	1500	2640

NOTE:

1. Signs are shown for one direction of travel only. Place devices similar to those depicted for the opposite direction of travel.
2. Final location and spacing of signs and devices may be changed to fit field conditions as approved by the CO.
3. For pilot car operation, mount the PILOT CAR FOLLOW ME (G20-4) sign at a conspicuous location on the rear of vehicle. Prominently display the name of the contractor on the pilot car.
4. If closure is completely within the project limits, eliminate the "ROAD WORK AHEAD" (W20-1) and "END ROAD WORK" (G20-2) signs.
5. For night time flagging operation, provide floodlighting at flagger stations.
6. For project specific minimum width, refer to Special Contract Requirements, Section 156.
7. Do not allow equipment, materials, or vehicles to be parked or stored in the buffer space.
8. If signs will be in place more than 72 consecutive hours, use ground-mounted post.

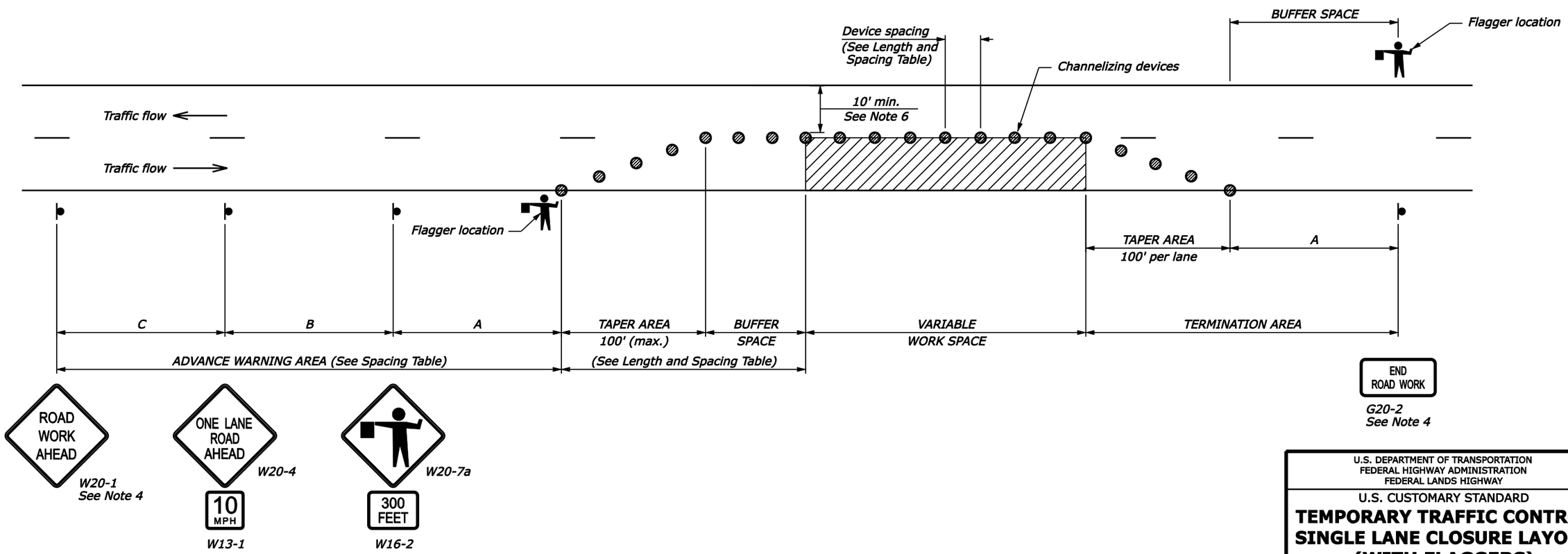

NO SCALE

U.S. DEPARTMENT OF TRANSPORTATION
FEDERAL HIGHWAY ADMINISTRATION
FEDERAL LANDS HIGHWAY

U.S. CUSTOMARY STANDARD

TEMPORARY TRAFFIC CONTROL SINGLE LANE CLOSURE LAYOUT (WITH FLAGGERS)

STANDARD APPROVED FOR USE 6/2005

REVISED:
DRAFT: 1/2007

STANDARD 635-6

1/28/2008 9:09:20 AM M:\Projects\heho\001\001\proj_dev\CADD\Std-Det\S9 st63506.dgn

REG	STATE	PROJECT	SHEET NO.
MW	IA	HEHO 10(1), 100(1)	S10

TYPICAL APPLICATION TWO WAY, TWO LANE ROADWAY, CLOSING ONE LANE

CHANNELIZING DEVICE TABLE

APPROACH SPEED (MPH)	MINIMUM TAPER LENGTH (FT)	CHANNELIZING DEVICE SPACING (FT)	
		TAPER AREA	WORK AREA
25	Taper formula: $L=\frac{W \times S}{2}$ for speeds of 45 or greater	25	50
30		30	60
35	$L=\frac{WS^2}{120}$ for speeds of 40 or less	35	70
40	Where:	40	80
45	L= Minimum length of taper	45	90
50	S= Numerical value of posted speed limit prior to work area or 85 percentile speed	50	100
55	W= Width of offset	55	100

ADVANCE WARNING SIGN SPACING CHART

POSTED SPEED LIMIT (MPH)	Recommended Distance Between Signs (feet)		
	A	B	C
≤ 35	200	200	200
40-50	350	350	350
55	500	500	500
Expressway/Urban Parkway	1000	1600	2600

NOTE:

1. Signs are shown for one direction of travel only. Place devices similar to those depicted for the opposite direction of travel.
2. Final location and spacing of signs and devices may be changed to fit field conditions as approved by the CO.
3. If closure is completely within the project limits, eliminate the "ROAD WORK AHEAD" (W20-1) and "END ROAD WORK" (G20-2) signs.
4. For project specific minimum width, refer to Special Contract Requirements, Section 156.
5. Do not allow equipment, materials, or vehicles to be parked or stored in the buffer space.
6. If signs will be in place more than 72 consecutive hours, use ground-mounted post.
7. Remove conflicting pavement markings as required.

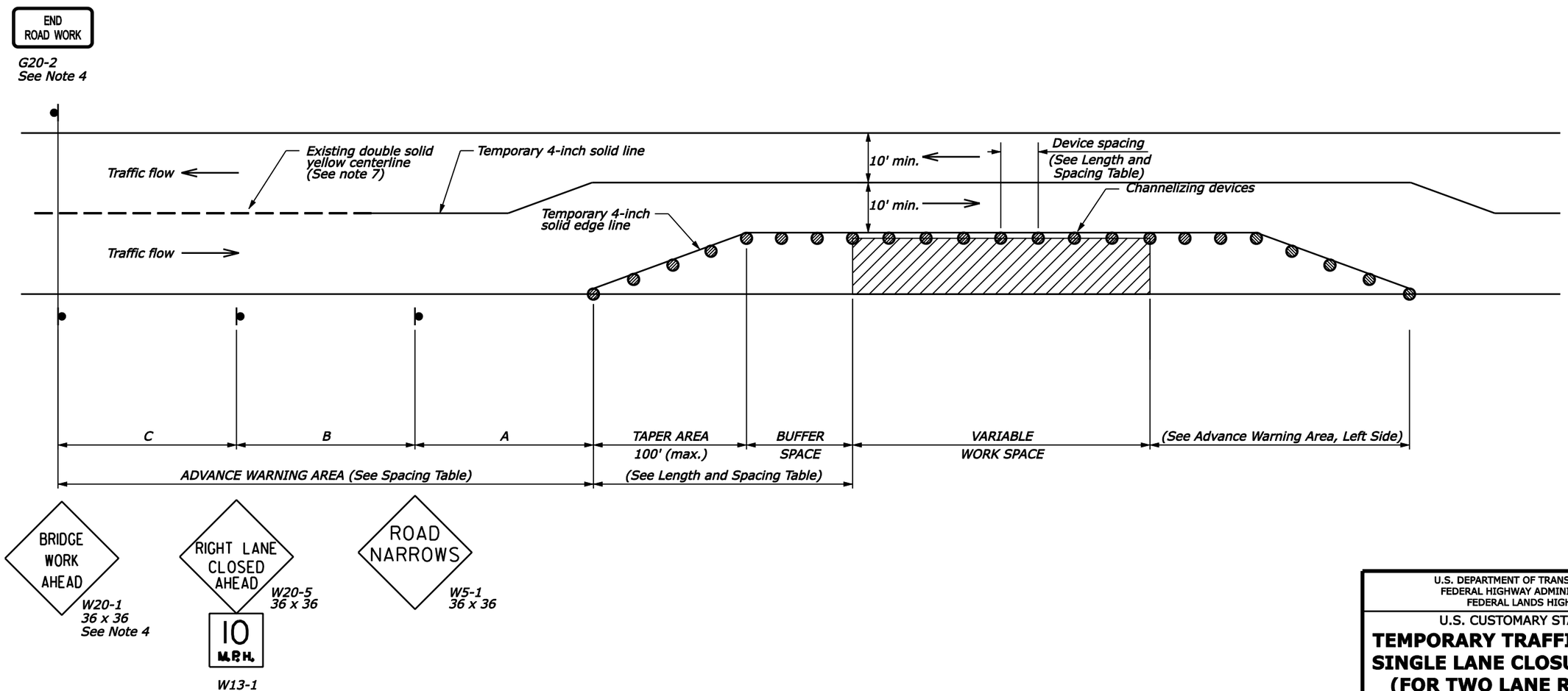

U.S. DEPARTMENT OF TRANSPORTATION
FEDERAL HIGHWAY ADMINISTRATION
FEDERAL LANDS HIGHWAY

U.S. CUSTOMARY STANDARD

TEMPORARY TRAFFIC CONTROL SINGLE LANE CLOSURE LAYOUT (FOR TWO LANE ROADWAY)

STANDARD APPROVED FOR USE 6/2005

REVISED:
DRAFT: 1/2007

DETAIL
635-6A

1/28/2008 9:09:52 AM M:\Projects\heho\0110001\proj_dev\CADD\Std-Det\S010 Dt63506A.dgn

REG	STATE	PROJECT	SHEET NO.
MW	IA	HEHO 10(1), 100(1)	S11

TYPICAL APPLICATION TWO WAY, TWO LANE ROADWAY, CLOSING ONE LANE

CHANNELIZING DEVICE TABLE

APPROACH SPEED (MPH)	MINIMUM TAPER LENGTH (FT)	CHANNELIZING DEVICE SPACING (FT)	
		TAPER AREA	WORK AREA
25	Taper formula: $L=\frac{W \times S}{2}$ for speeds of 45 or greater	25	50
30		30	60
35	$L=\frac{WS^2}{120}$ for speeds of 40 or less	35	70
40	Where:	40	80
45	L= Minimum length of taper	45	90
50	S= Numerical value of posted speed limit prior to work area or 85 percentile speed	50	100
55	W= Width of offset	55	100

ADVANCE WARNING SIGN SPACING CHART

POSTED SPEED LIMIT (MPH)	Recommended Distance Between Signs (feet)		
	A	B	C
≤ 35	200	200	200
40-50	350	350	350
55	500	500	500
Expressway/Urban Parkway	1000	1600	2600

NOTE:

1. Signs are shown for one direction of travel only. Place devices similar to those depicted for the opposite direction of travel.
2. Final location and spacing of signs and devices may be changed to fit field conditions as approved by the CO.
3. If closure is completely within the project limits, eliminate the "ROAD WORK AHEAD" (W20-1) and "END ROAD WORK" (G20-2) signs.
4. For project specific minimum width, refer to Special Contract Requirements, Section 156.
5. Do not allow equipment, materials, or vehicles to be parked or stored in the buffer space.
6. If signs will be in place more than 72 consecutive hours, use ground-mounted post.
7. Remove conflicting pavement markings as required.

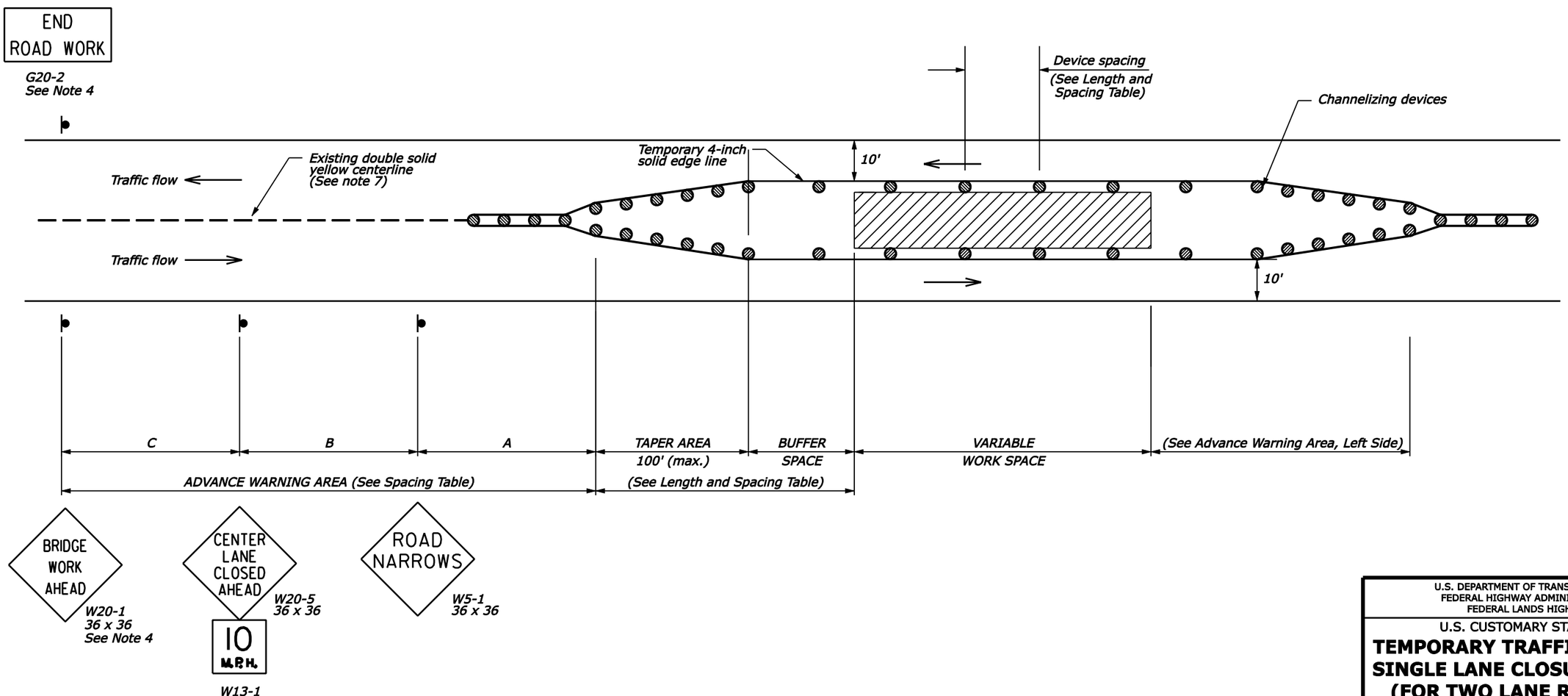

U.S. DEPARTMENT OF TRANSPORTATION
FEDERAL HIGHWAY ADMINISTRATION
FEDERAL LANDS HIGHWAY

U.S. CUSTOMARY STANDARD

TEMPORARY TRAFFIC CONTROL SINGLE LANE CLOSURE LAYOUT (FOR TWO LANE ROADWAY)

STANDARD APPROVED FOR USE 6/2005
REVISED:
DRAFT: 1/2007

DETAIL
635-6B

1/28/2008 9:10:47 AM M:\Projects\heho\0710001\pro_dev\CADD\Std-Det\S011 Dt63506B.dgn

REG	STATE	PROJECT	SHEET NO.
MW	IA	HEHO 10(1), 100(1)	S12

NOTE:

1. Use Type III or higher type sheeting on all signs and channelizing devices. Warning lights are not normally needed on devices with Type III or higher type sheeting, but may be beneficial to attract the drivers attention in fog or other special conditions. When used, apply the appropriate type of warning light (Type A, B, C, or D) per the MUTCD Chapter 6F.
2. Ensure all sign supports exposed to impact by traffic meet the requirements of NCHRP-350 for crash worthiness.
3. Do not store traffic control devices along the roadway when not in use. Cover post-mounted signs when not applicable.
4. State standards may be used as an alternative if approved by the CO.

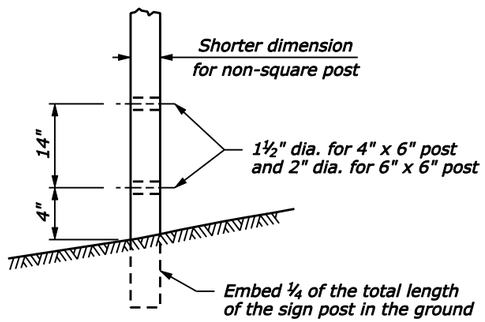

POST DETAIL

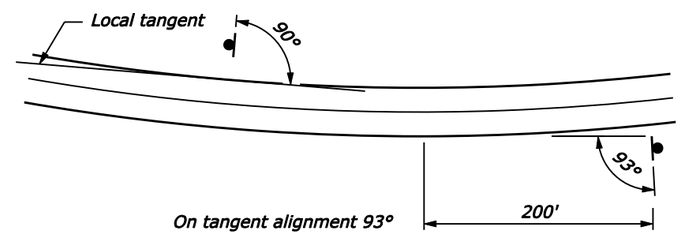

SIGN INSTALLATION ANGLE

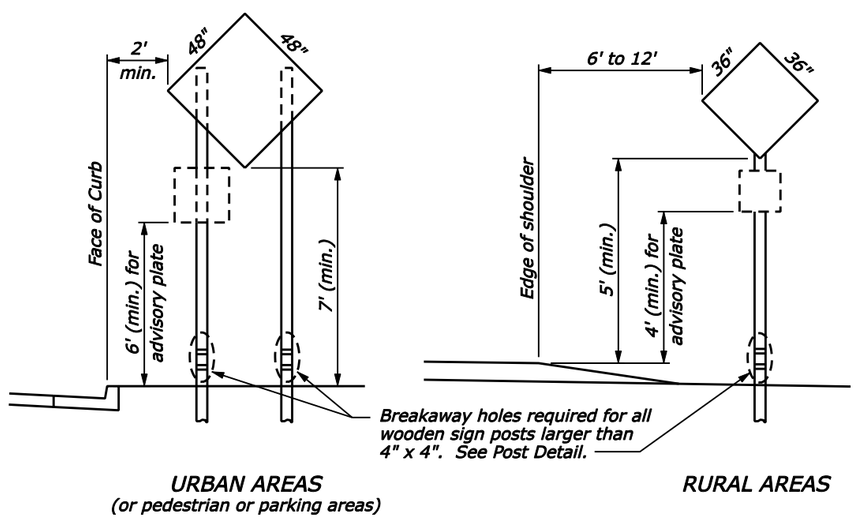

NOTE: Mount signs with area 9 sqft and under on a single 4" x 4" wood post. Use double wood posts for signs wider than 36" or signs with an area over 9 sqft. Steel may be used in lieu of wood posts (See Note #2).

SIGN PLACEMENT

NO SCALE

U.S. DEPARTMENT OF TRANSPORTATION
FEDERAL HIGHWAY ADMINISTRATION
FEDERAL LANDS HIGHWAY

U.S. CUSTOMARY STANDARD

TEMPORARY TRAFFIC CONTROL SIGN INSTALLATION

STANDARD APPROVED FOR USE 6/2005

REVISED:
DRAFT: 1/2007

STANDARD
635-14

1/28/2008 10:19:30 AM M:\Projects\Heho\001\001\proj_dir\CADD\Std-Det\S012 st63514.dgn

REG	STATE	PROJECT	SHEET NO.
MW	IA	HEHO 10(1), 100(1)	U1

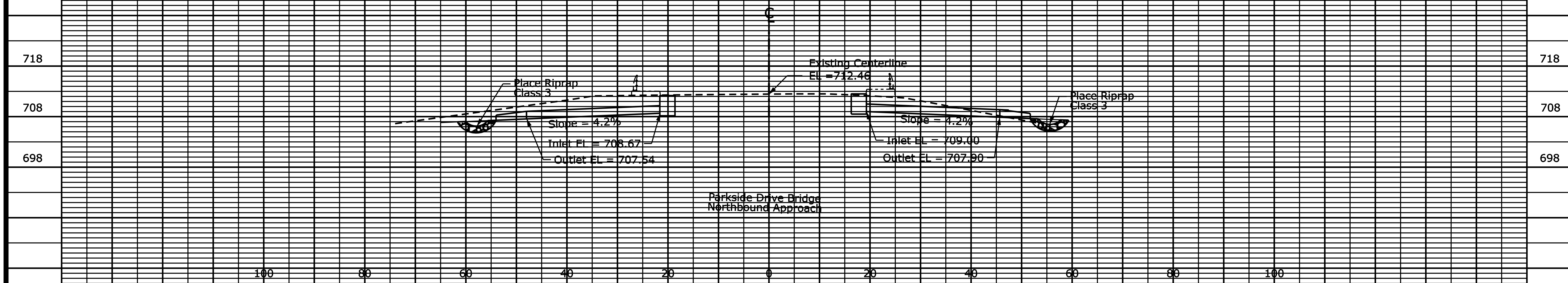

$$$$DATE$$$$ $TIME$ $$$$DGN$$

U.S. DEPARTMENT OF TRANSPORTATION
FEDERAL HIGHWAY ADMINISTRATION
EASTERN FEDERAL LANDS HIGHWAY DIVISION
STERLING, VIRGINIA

HERBERT HOOVER NATIONAL HISTORIC SITE

DRAINAGE CROSS SECTIONS PARKSIDE DRIVE BRIDGE

0 10 20
SCALE IN FEET

...\U01-heho 10(1), 100(1)_xds.dgn 1/29/2008 7:57:05 AM