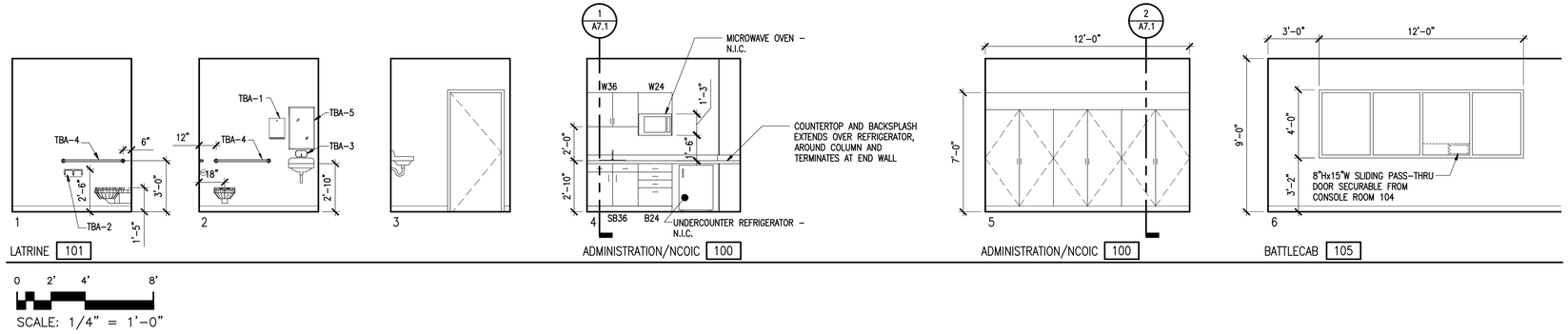

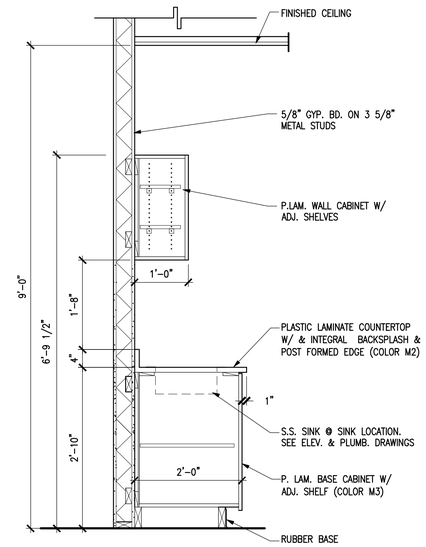

1 A7.1 SECTION AT CASEWORK

0 8" 1'-4" 2'-8"

SCALE: 3/4" = 1'-0"

RESTROOM ACCESSORY SCHEDULE

Mark	DESCRIPTION
TBA-1	PAPER TOWEL DISPENSER
TBA-2	TOILET TISSUE DISPENSER
TBA-3	SOAP DISPENSER
TBA-4	GRAB BAR
TBA-5	MIRROR UNIT

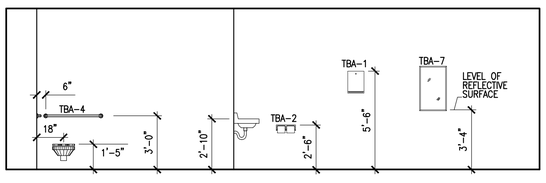

TYPICAL MOUNTING HEIGHTS

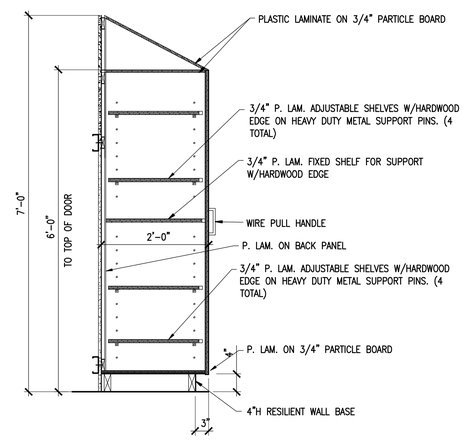

2 A7.1 SECTION AT STORAGE CABINETS

0 8" 1'-4" 2'-8"

SCALE: 3/4" = 1'-0"

DATE	REVISION

183rd Fighter Wing
Illinois Air National Guard

HANSON PROJECT
FILENAME A701.DWG
SCALE AS NOTED
DATE 3/2/09

LAYOUT	xxx	xx/xx/xx
DRAWN	BWW	08/20/08
REVIEWED	xxx	xx/xx/xx

HANSON

© Copyright Hanson Professional Services Inc. 2009

Hanson Professional Services Inc.
1525 South Sixth Street
Springfield, Illinois 62703-2686

INTERIOR ELEVATIONS AND DETAILS

COMMAND POST (CP) RELOCATION
183D FIGHTER WING
SPRINGFIELD, IL

A7.1

MAR 02, 2009 2:54 PM WELLS00930\03JOBS\03S1408GG-COMMAND POST\CADD\TYPE B1 DESIGN SERVICES\ARCH\SHEET\A701.DWG - A701