STATE	PROJECT	SHEET NUMBER
ID	PFH 9(5)	A.1

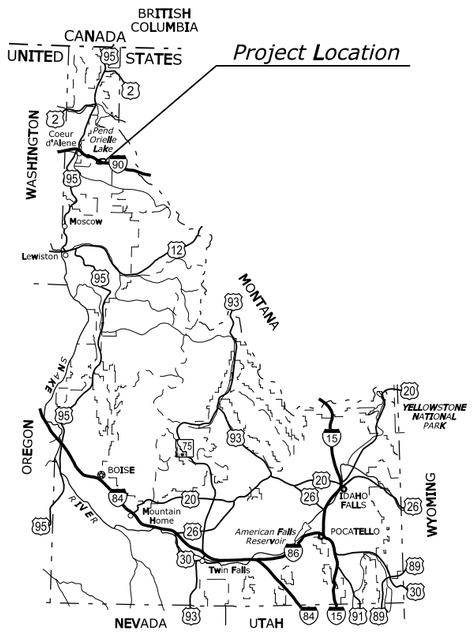

IDAHO KEY MAP

U. S. DEPARTMENT OF TRANSPORTATION
FEDERAL HIGHWAY ADMINISTRATION

PLANS FOR PROPOSED PROJECT

ID PFH 9(5)

ENAVILLE-THOMPSON PASS ROAD

IDAHO PANHANDLE NATIONAL FOREST
SHOSHONE COUNTY
IDAHO

LENGTH 12.9 MILES

TYPE OF CONSTRUCTION:

Subexcavation, base and paving

DESIGN DESIGNATION:

ADT (2008)	*500*
ADT (2028)	*750*
V	*50 MPH (posted)*
e (max)	*Match existing*
T	*15%*

SPECIFICATION:

Standard Specifications for Construction of Roads and Bridges on Federal Highway Projects, FP-03 US Customary Units

FEDERAL LANDS HIGHWAY
COMMITMENT TO EXCELLENCE

PLANS PREPARED BY
U.S. DEPARTMENT OF TRANSPORTATION
FEDERAL HIGHWAY ADMINISTRATION
WESTERN FEDERAL LANDS HIGHWAY DIVISION
VANCOUVER, WASHINGTON

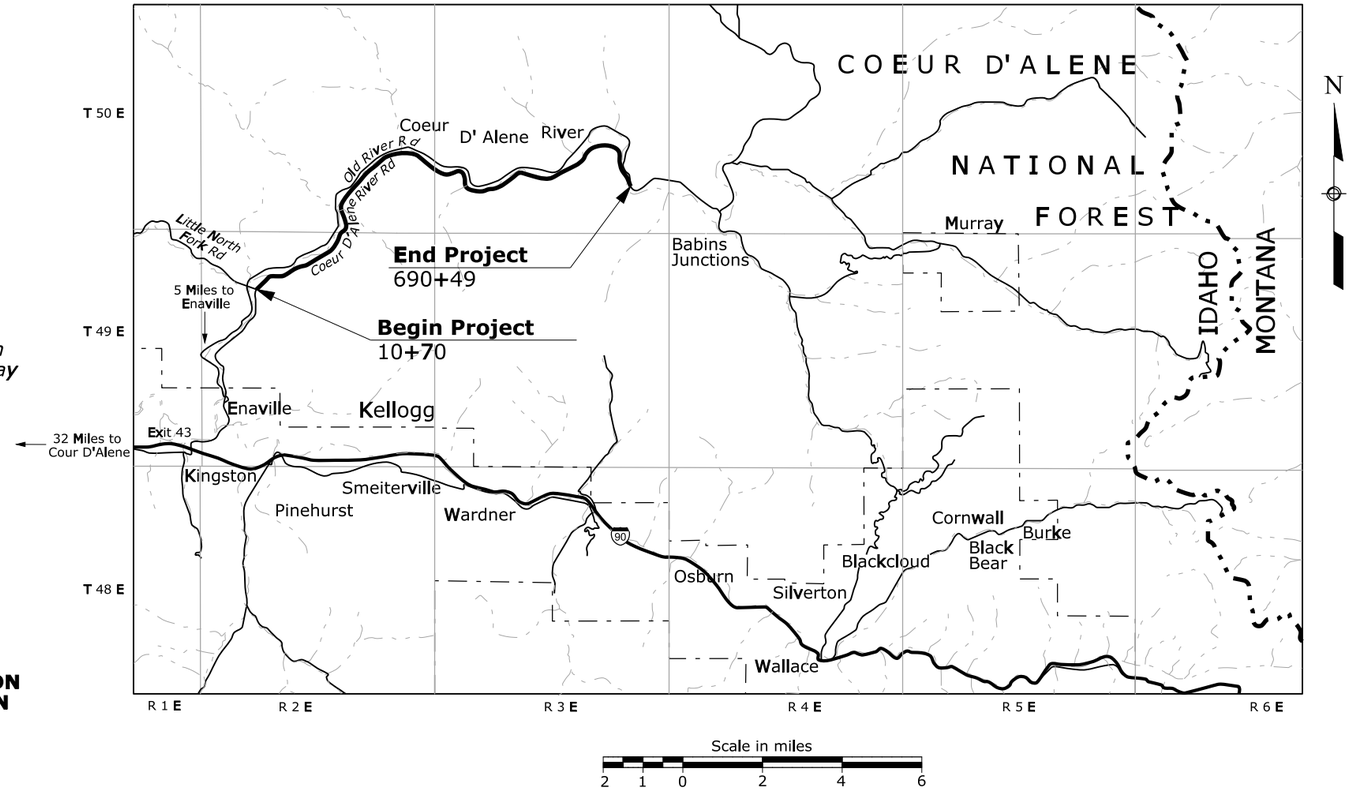

PRELIMINARY
NOT FOR CONSTRUCTION

RECOMMENDED:

_____ *DATE* _____

Project Manager,
Western Federal Lands Highway Division

APPROVED:

_____ *DATE* _____

Director, Project Delivery,
Western Federal Lands Highway Division

Checked by: --/---- Designed by: --/---- 15-AUG-2008 12:00PM TP_PWP:dms03540\j0095aa.dgn [US_Int2D]

STATE	PROJECT	SHEET NUMBER
ID	PFH 9(5)	A.4

IDAHO PANHANDLE NATIONAL FOREST

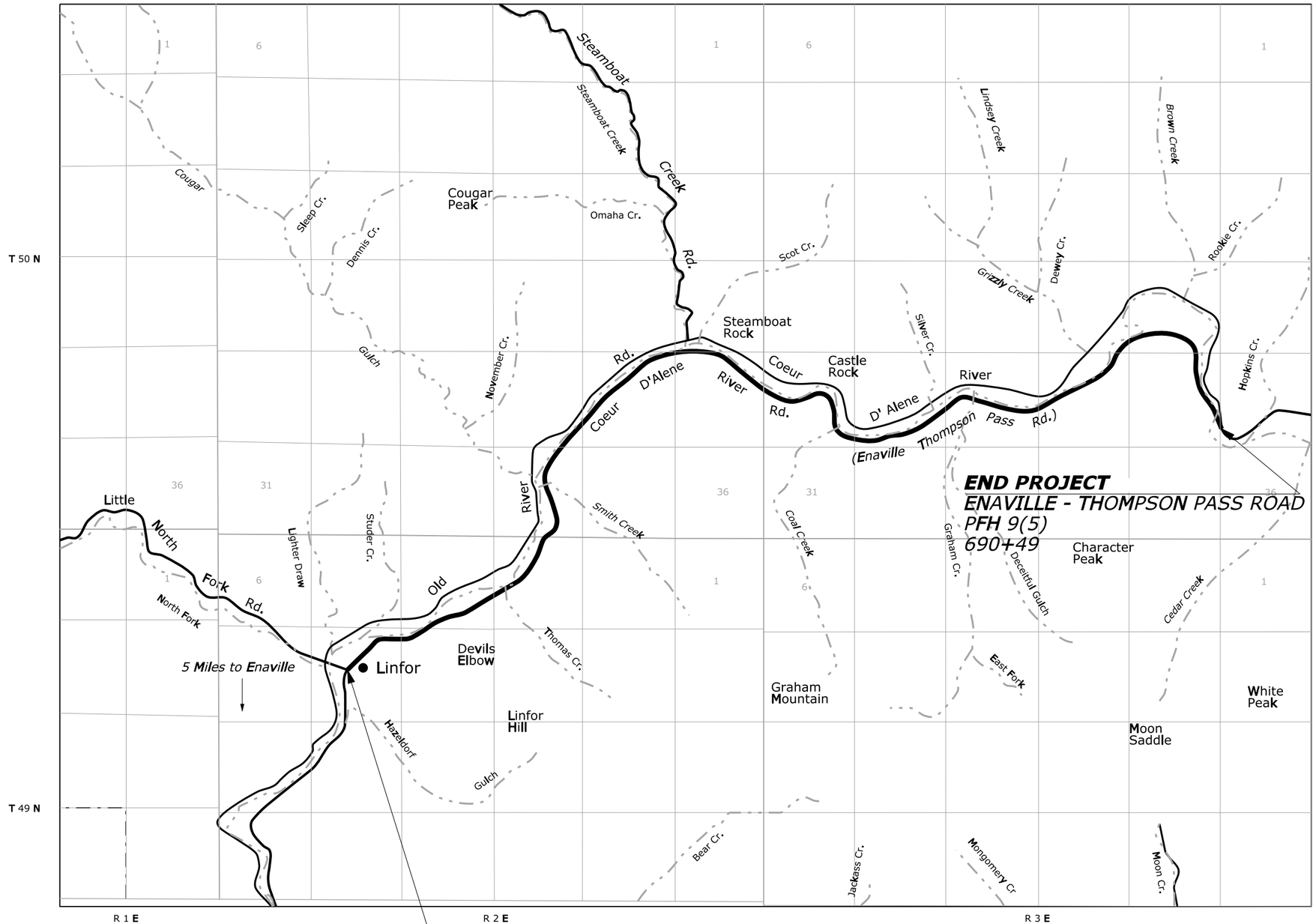

PRELIMINARY
NOT FOR CONSTRUCTION

VICINITY MAP

--/---- Checked by: --/---- 15-AUG-2008 12:01PM Designed by: IP_PWP:dms03540\f0095ab.dgn [US_Int2D]

STATE	PROJECT	SHEET NUMBER
ID	PFH 9-(5)	C.2

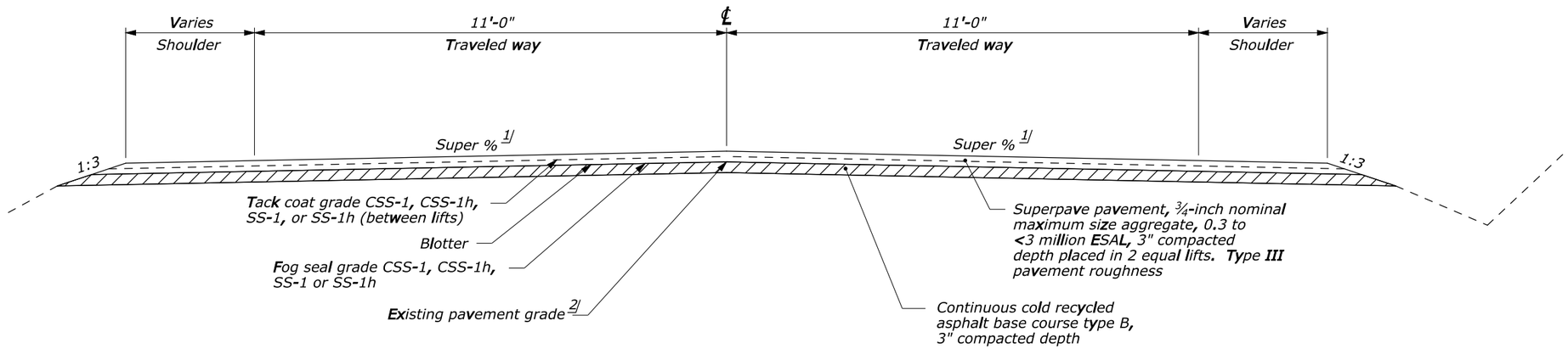

MAINLINE TYPICAL SECTION

10+70 TO 690+49

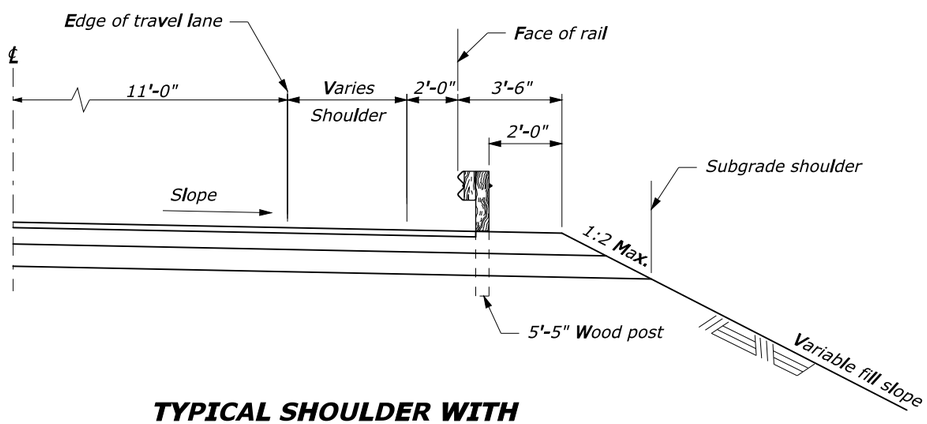

TYPICAL SHOULDER WITH 5'-5" REGULAR POST GUARDRAIL 37+00 to 58+25

PRELIMINARY
NOT FOR CONSTRUCTION

NOTE:

1. Existing shoulder width varies 1'-0" to 3'-6". Recycle the existing asphalt pavement full width.

FOOTNOTE:

1/ Match existing superelevation or crown.

2/ Top of recycled aggregate course in subbexcavation areas.

MAINLINE TYPICAL SECTION

IP_PWP:dms03542\f0095cb.dgn [US_Sur2D] 15-AUG-2008 12:01PM Designed by: --/--- Checked by: --/---

STATE	PROJECT	SHEET NUMBER
ID	PFH 9(5)	C.3

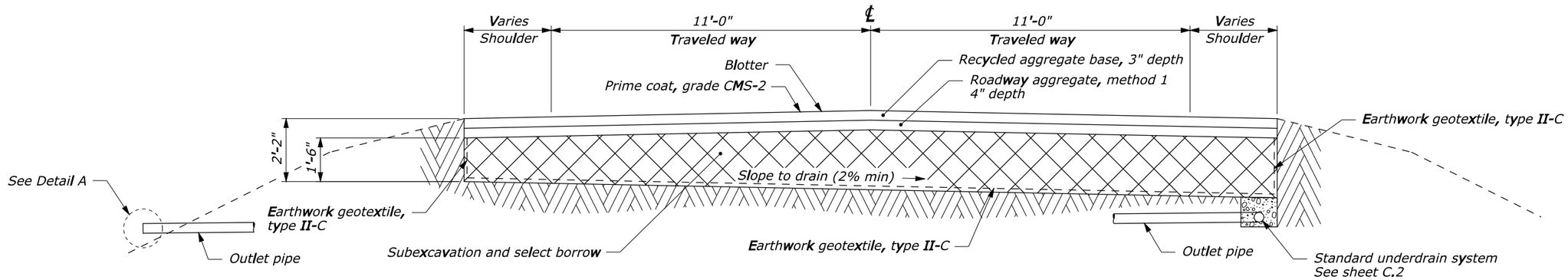

SUBEXCAVATION TYPE I
FULL WIDTH

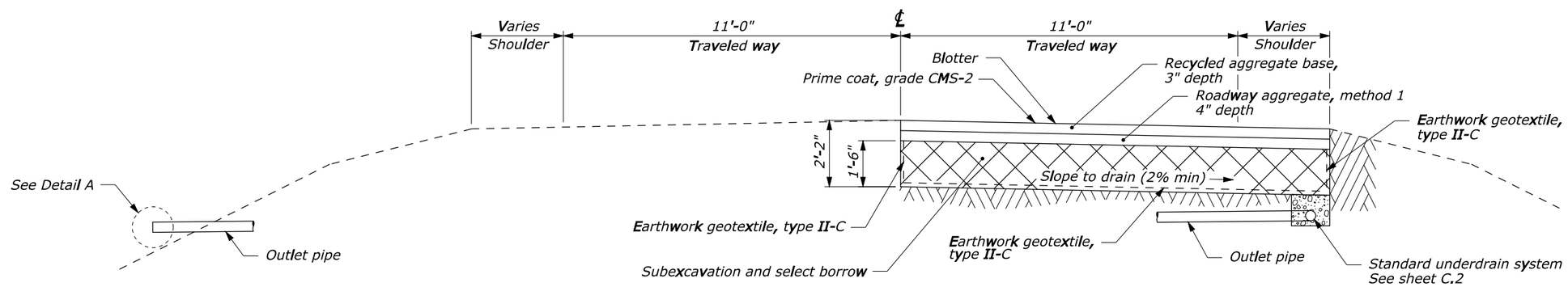

SUBEXCAVATION TYPE I
1/2 WIDTH RT.

PRELIMINARY
NOT FOR CONSTRUCTION

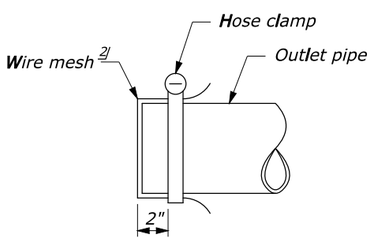

DETAIL A

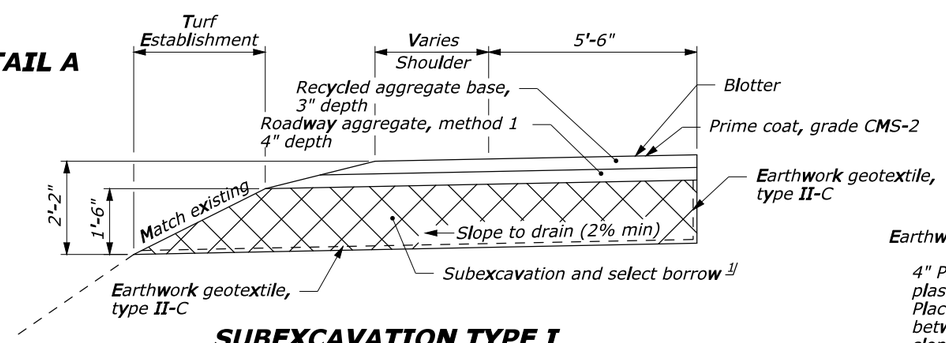

SUBEXCAVATION TYPE I
1/4 WIDTH LT.

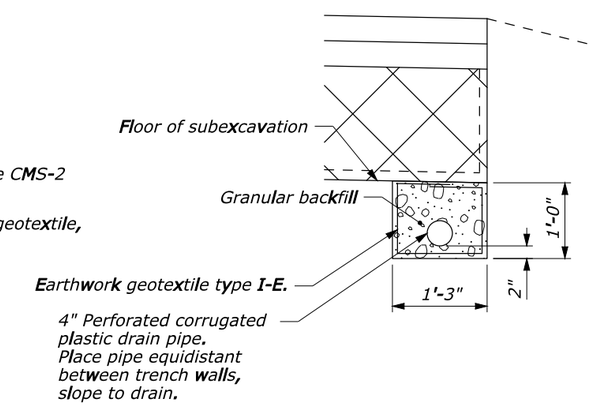

STANDARD UNDERDRAIN SYSTEM

NOTE

1. See sheet C.1 for locations and quantities.
2. See mainline typical section for proposed pavement structure.
3. Complete placement of recycled aggregate base in subexcavation areas prior to end of shift to facilitate public traffic.
4. Existing shoulder width varies 1'-0" to 3'-6". Pulverize and conserve full width and depth of existing asphalt concrete pavement in subexcavation areas. See Subsection 310.

FOOTNOTE

1/ Excavate to top of rip rap or 2'-2" maximum.

2/ Use stainless steel WWF 1/4 x 1/4 x 1/16.

TYPICAL SECTION SUBEXCAVATION DETAILS

IP_PWP:dms03542\W0095cb.dgn [US_Sur20] 15-AUG-2008 12:01PM Designed by: --/--- Checked by: --/--- --/---

STATE	PROJECT	SHEET NUMBER
ID	PFH 9(5)	C.4

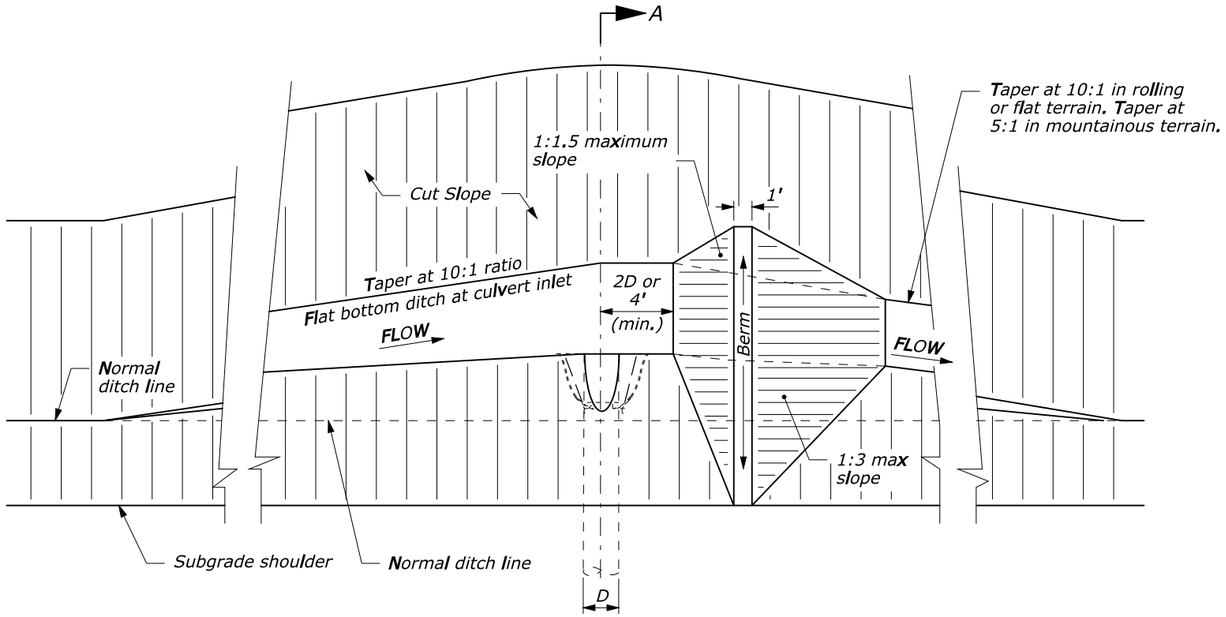

PLAN
CATCH BASIN WITH BERM

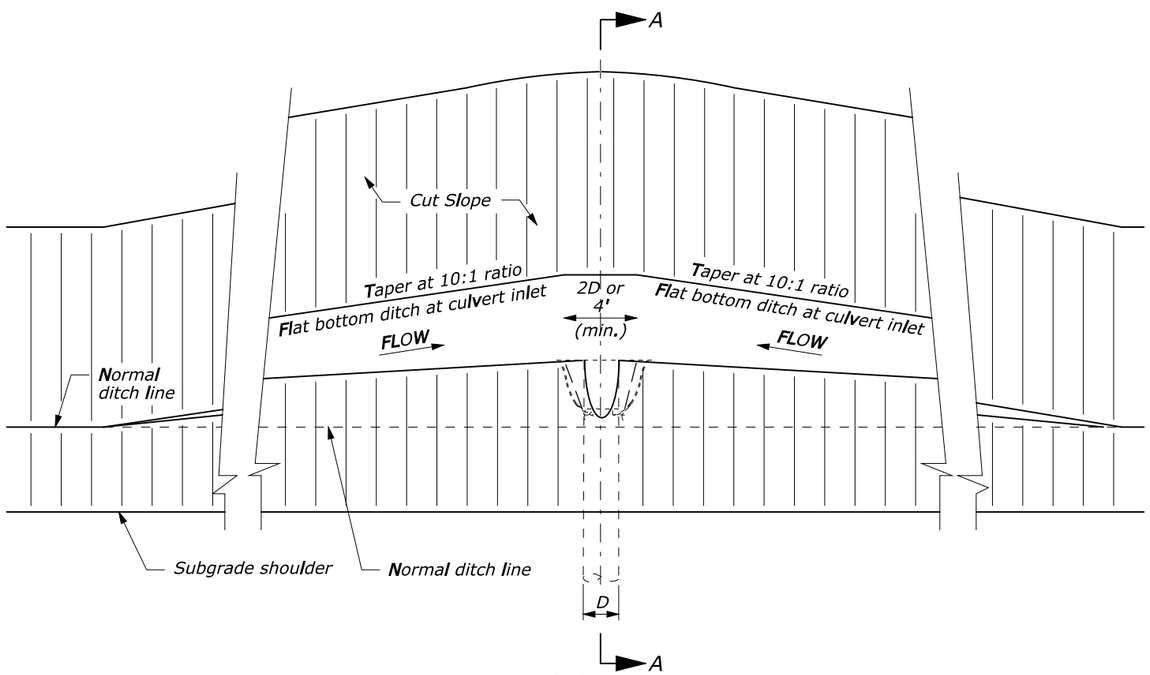

PLAN
CATCH BASIN WITHOUT BERM

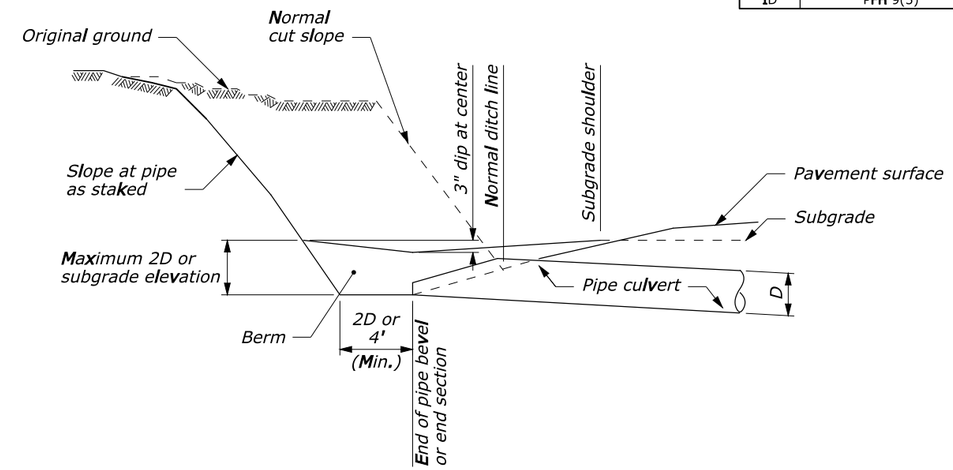

SECTION A-A
TYPE I

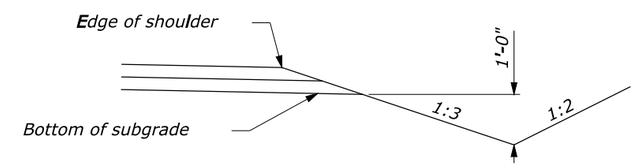

DITCH RECONDITIONING DETAIL

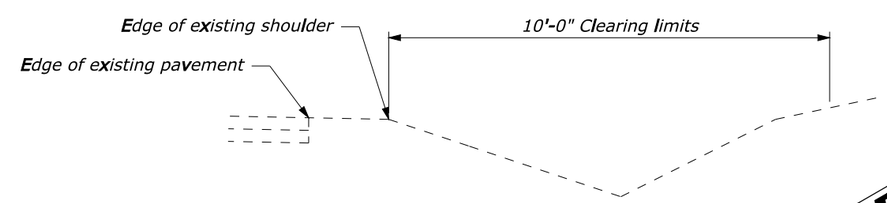

CLEARING DETAIL

PRELIMINARY
NOT FOR CONSTRUCTION

NOTE:

1. D equals the diameter of all round pipe or the rise dimension of all pipe arch culverts.

DITCH RECONDITIONING AND CLEARING DETAILS

IP_PWP:dms03542\vd0095cc.dgn [US_Sur2D] 15-AUG-2008 12:01PM Designed by: --/--- Checked by: --/---

STATE	PROJECT	SHEET NUMBER
ID	PFH 9(5)	D.2

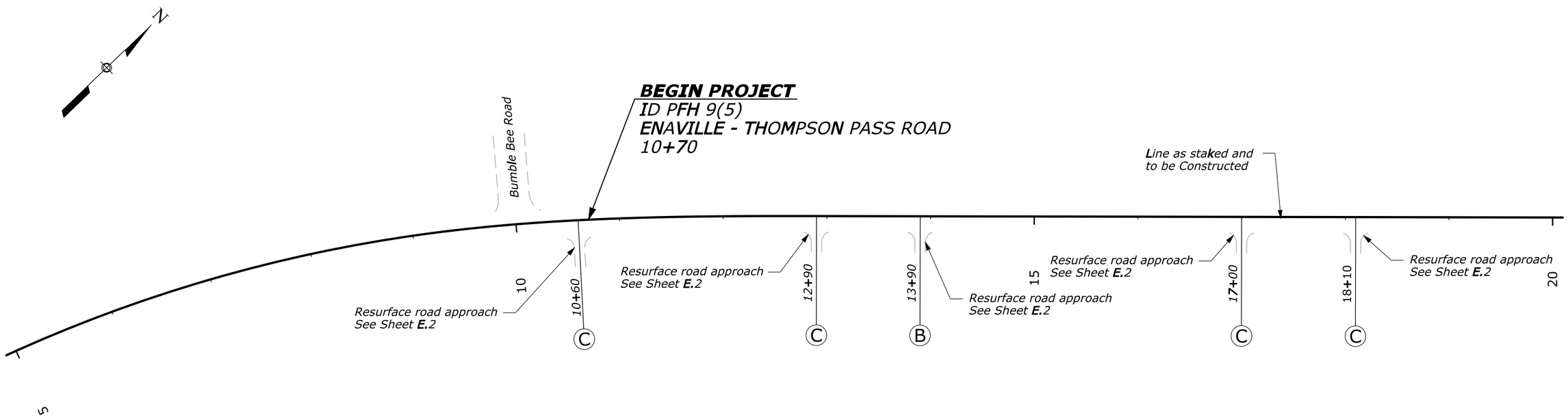

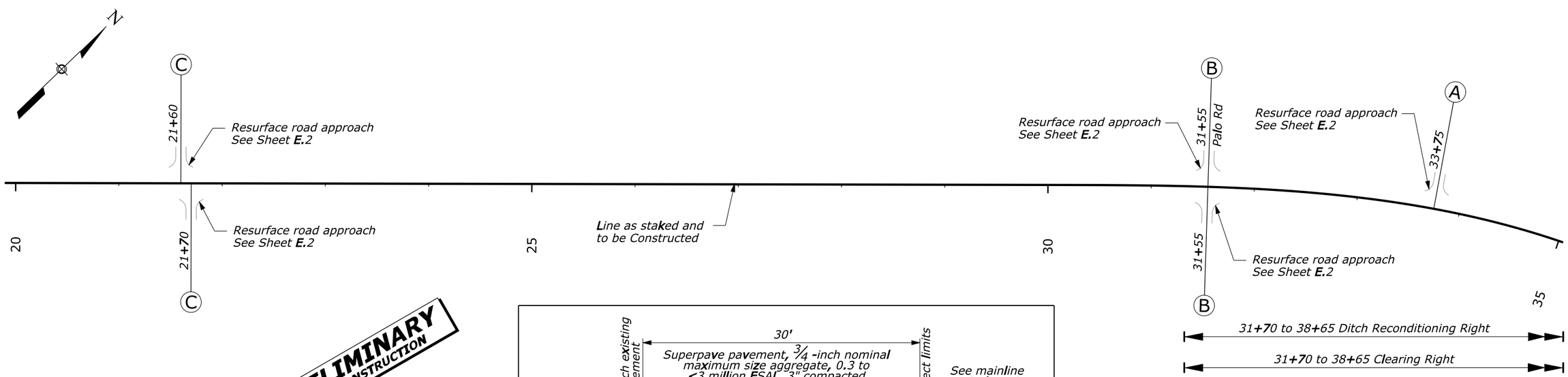

PRELIMINARY
NOT FOR CONSTRUCTION

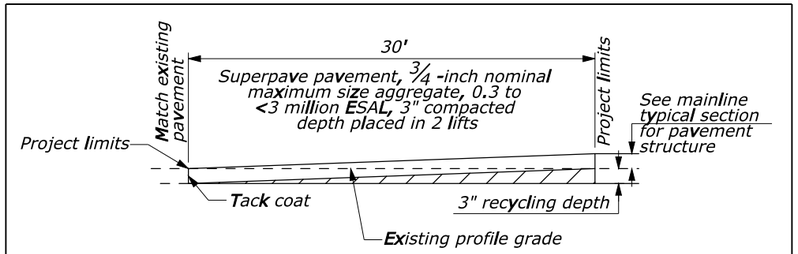

PAVEMENT CONNECTION DETAIL

ENAVILLE - THOMPSON PASS ROAD
10+70 TO 35+00

--/---- Checked by:
--/---- Designed by:
15-AUG-2008 12:01PM
IP_PWP:dms03543\0095fa.dgn [US_Sur2D]

STATE	PROJECT	SHEET NUMBER
ID	PFH 9(5)	D.3

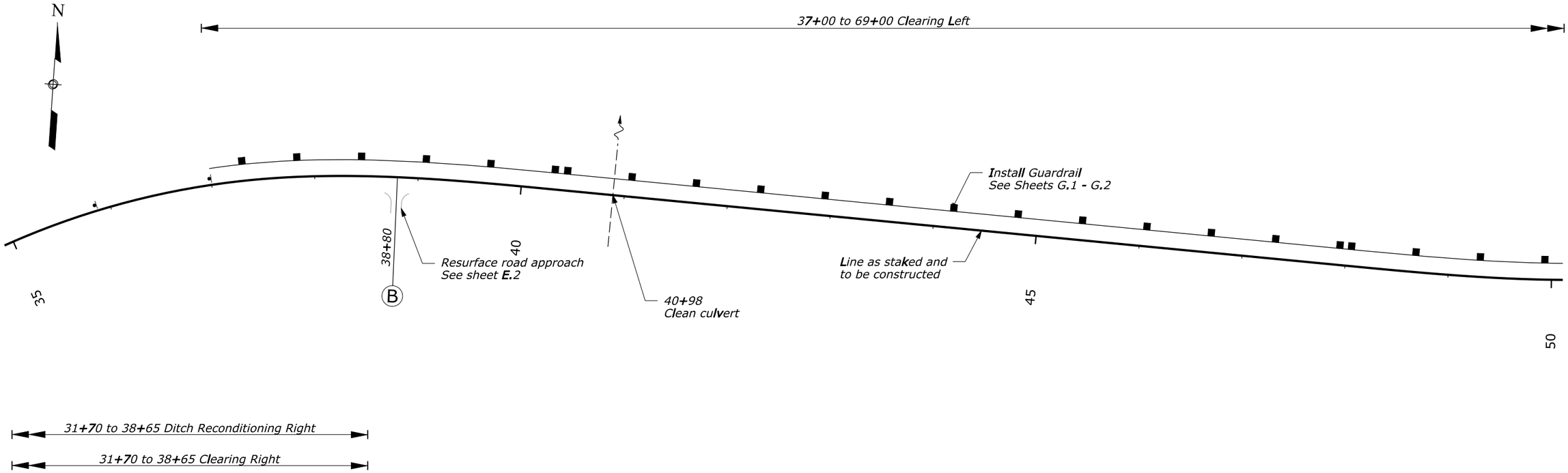

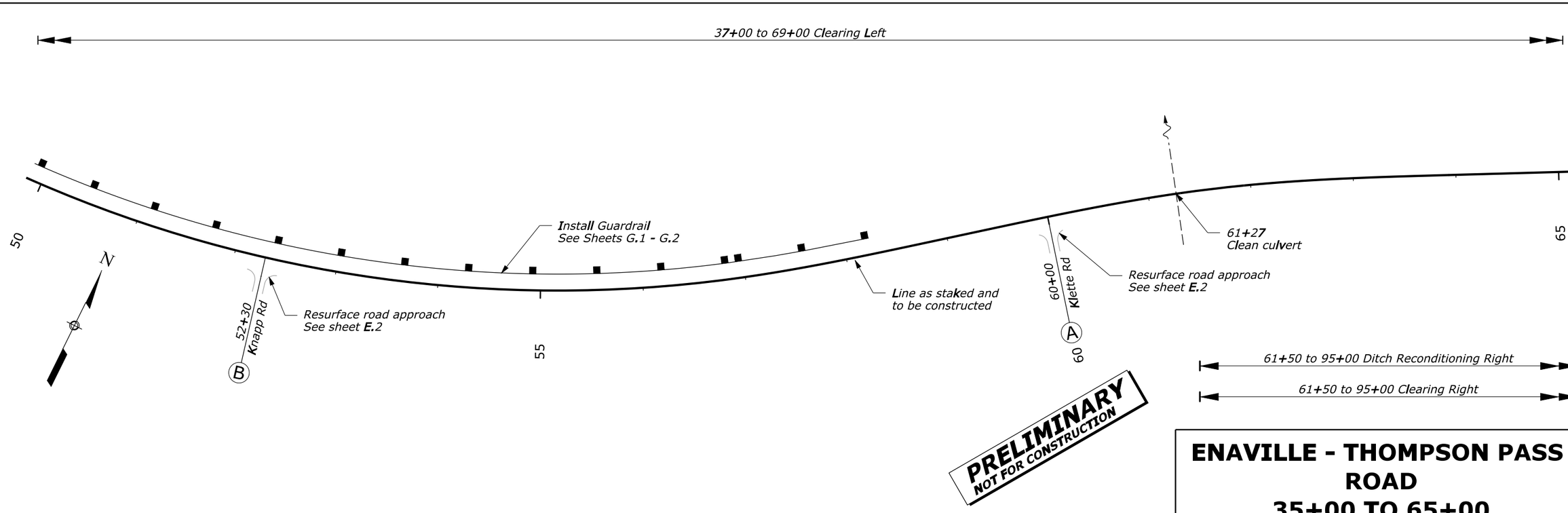

PRELIMINARY
NOT FOR CONSTRUCTION

ENAVILLE - THOMPSON PASS ROAD
35+00 TO 65+00

IP_PWP:dms03543\0095fb.dgn [US_Sur2D] 15-AUG-2008 12:01PM Designed by: --/--- Checked by: --/--- --/---

STATE	PROJECT	SHEET NUMBER
ID	PFH 9(5)	D.4

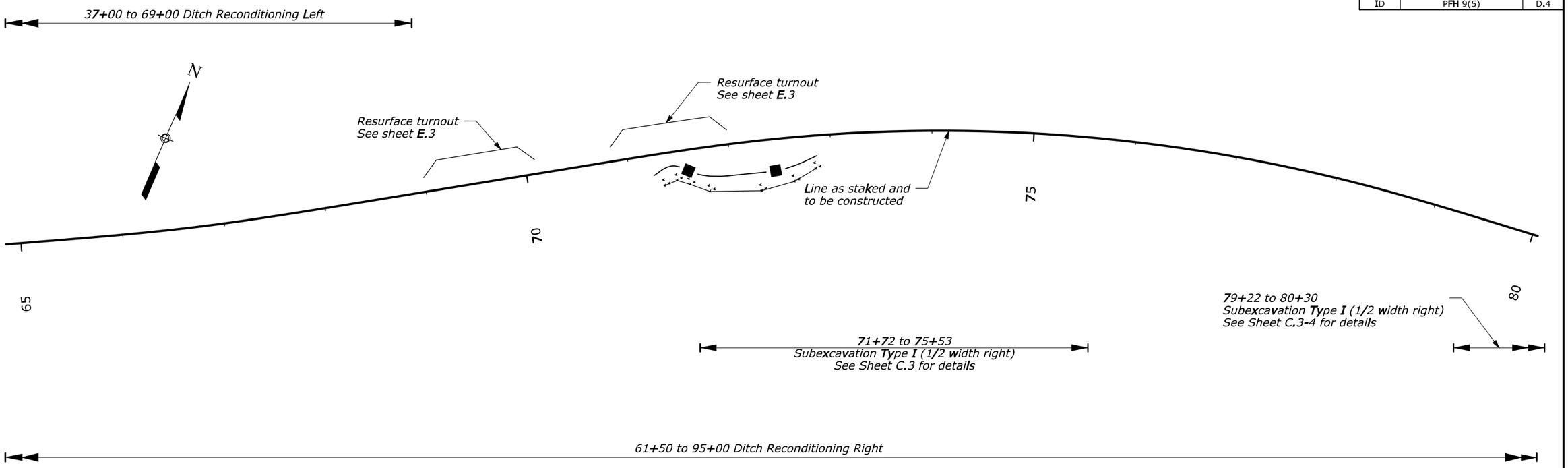

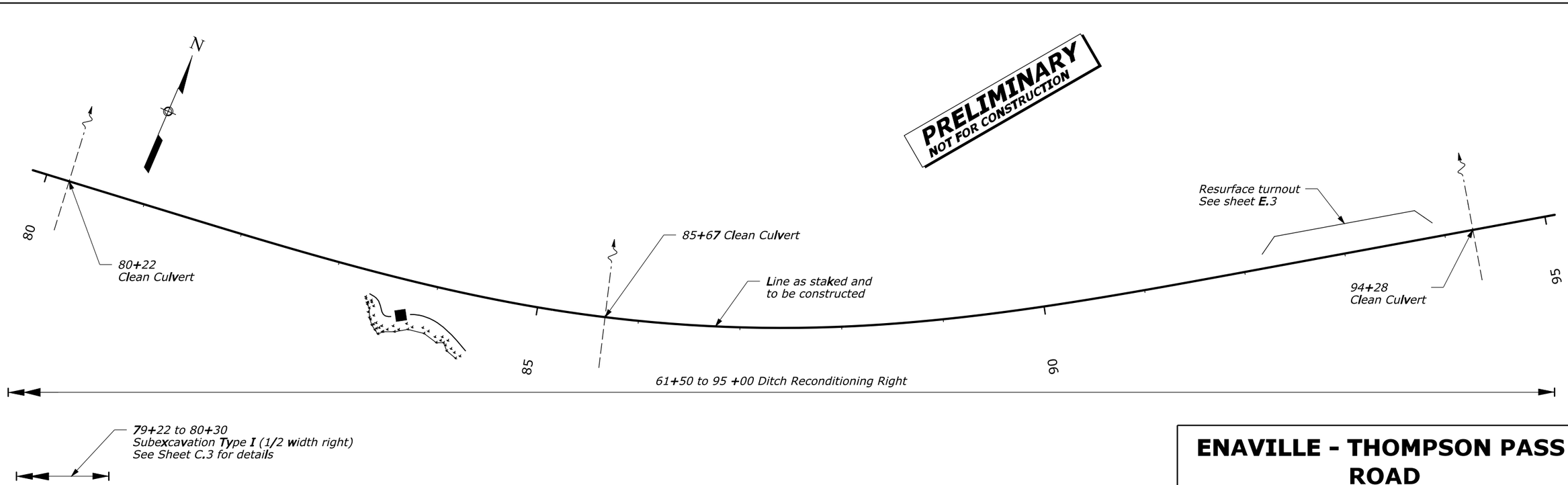

ENAVILLE - THOMPSON PASS ROAD
65+00 TO 95+00

--/---- Checked by:
--/---- Designed by:
15-AUG-2008 12:01PM
IP_PWF:dms03543\0095fc.dgn [US_Sur2D]

STATE	PROJECT	SHEET NUMBER
ID	PFH 9(5)	D.5

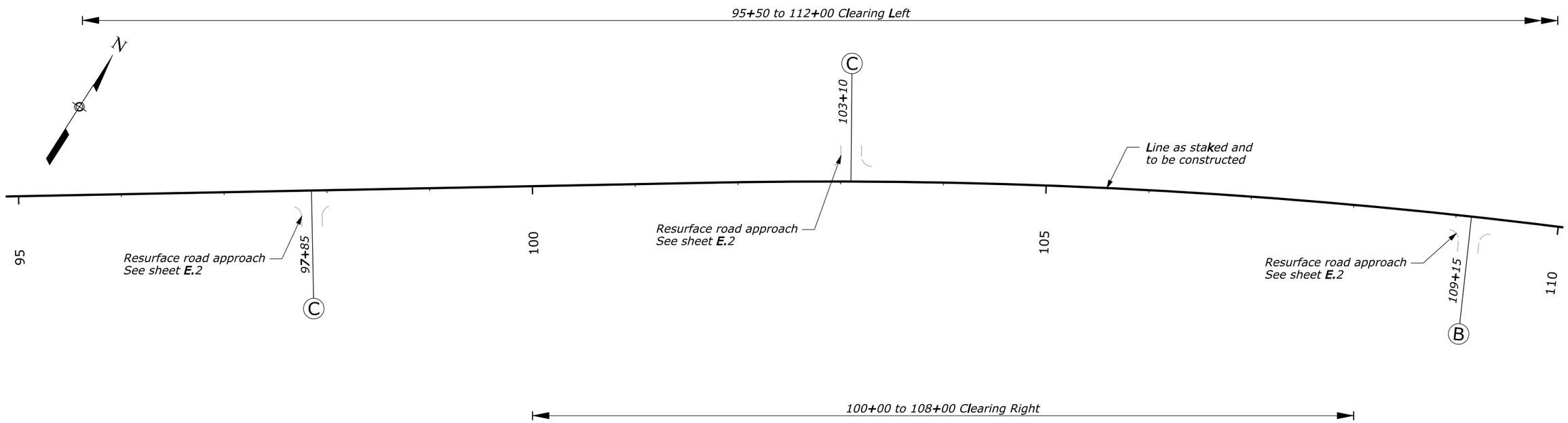

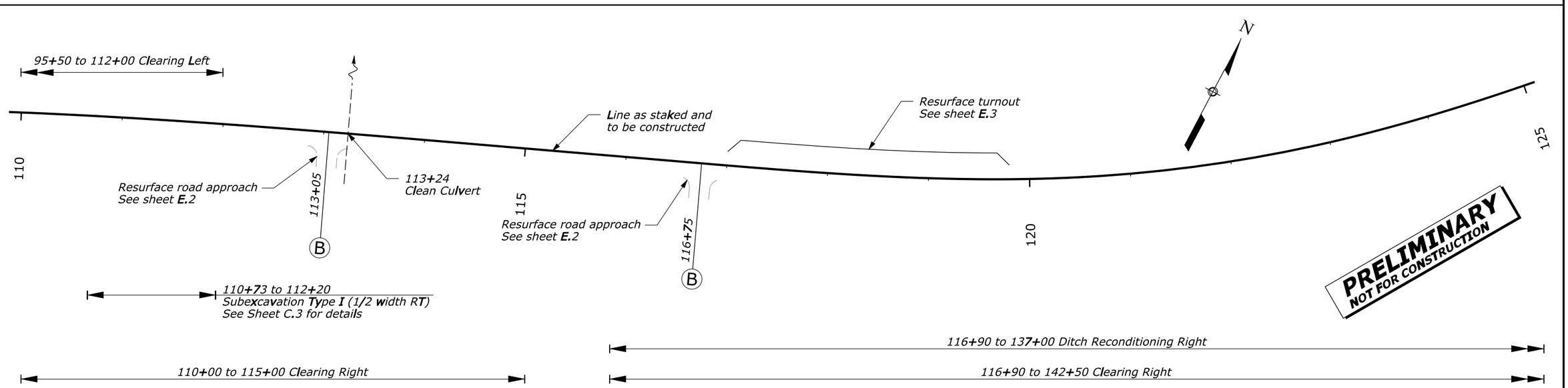

ENAVILLE - THOMPSON PASS ROAD
95+00 TO 125+00

--/---- Checked by:
--/---- Designed by:
15-AUG-2008 12:01PM
IP_PWF:dms03543\0095fd.dgn [US_Sur2D]

STATE	PROJECT	SHEET NUMBER
ID	PFH 9(5)	D.6

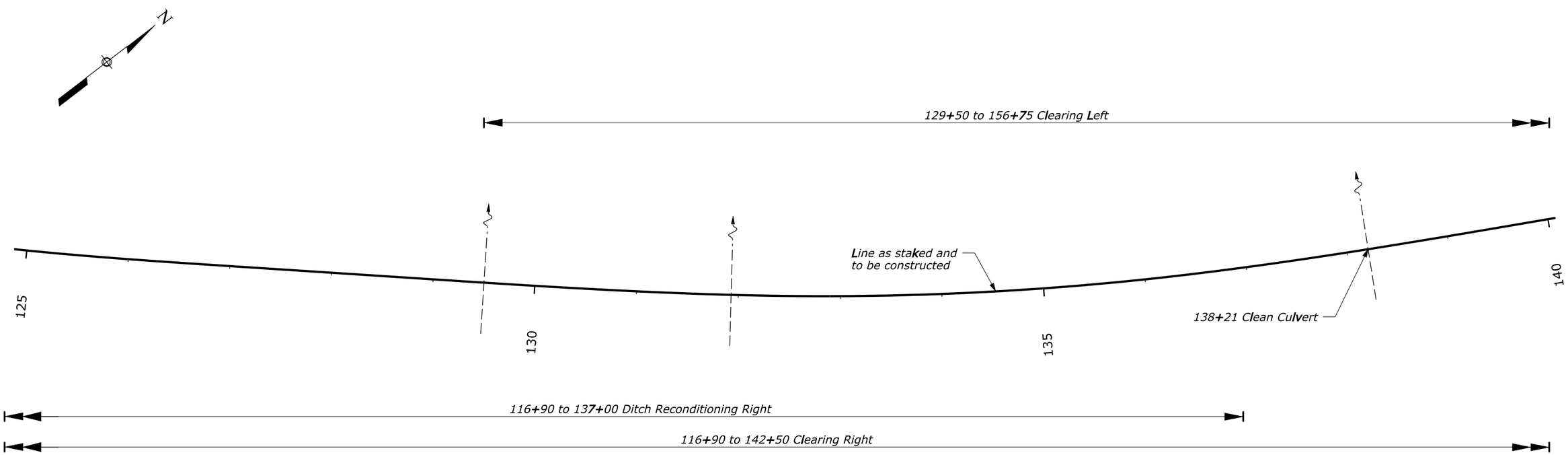

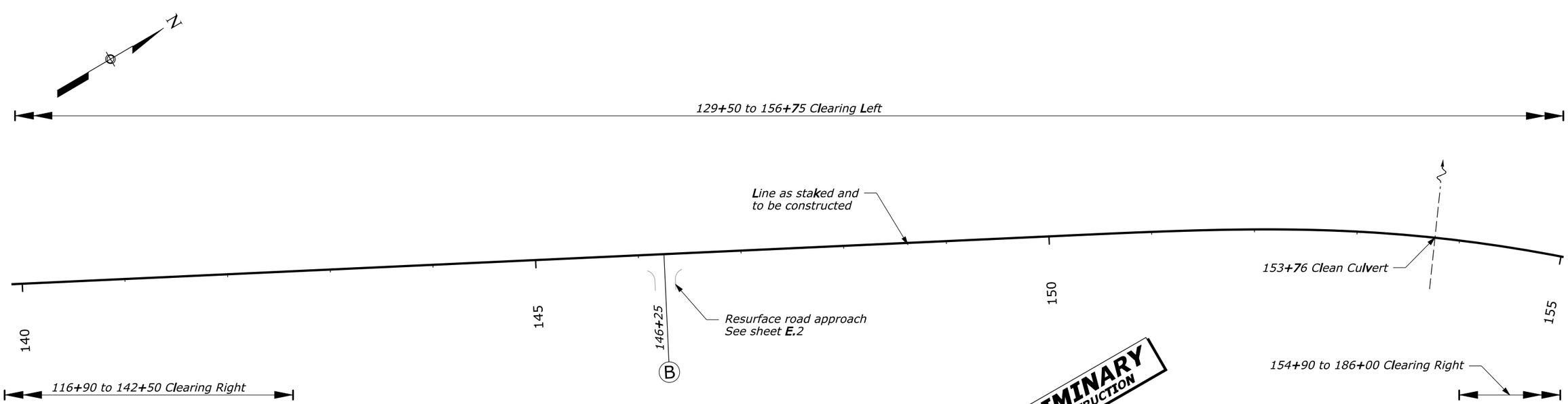

PRELIMINARY
NOT FOR CONSTRUCTION

ENAVILLE - THOMPSON PASS ROAD
125+00 TO 155+00

--/---- Checked by:
--/---- Designed by:
15-AUG-2008 12:01PM
IP_PWF:dms03543\0095fe.dgn [US_Sur2D]