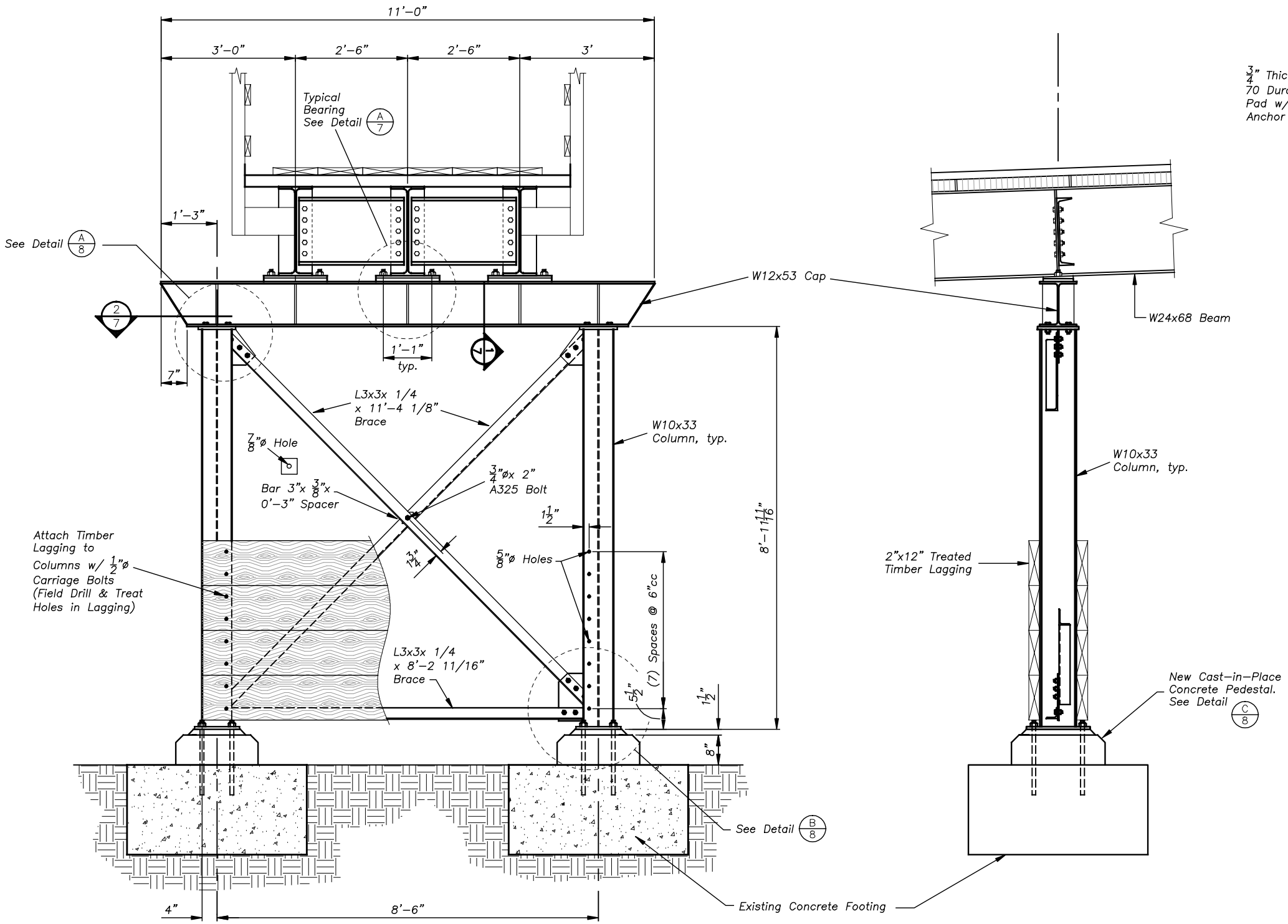

ELEVATION- NEW STEEL PIER

Scale: 3/8" = 1'–0"

NOTE: STRUCTURAL STEEL SHAPES, PLATES & BARS FOR THE STEEL BENT MAY BE ASTM A36, or ASTM A992.

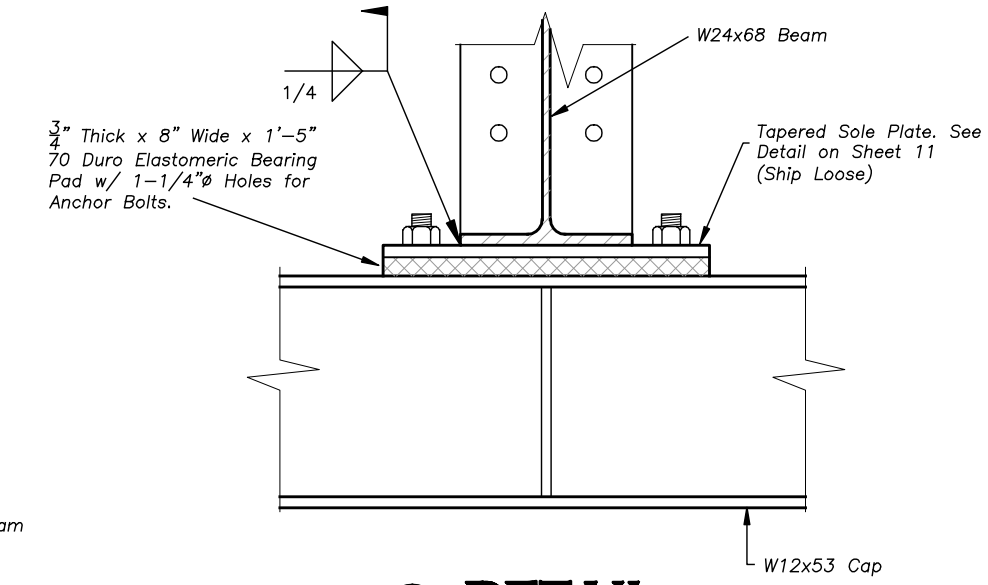

A/7 DETAIL

Not to Scale

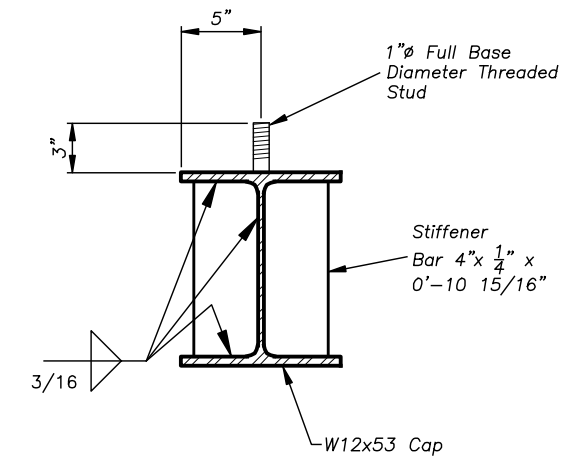

1/7 SECTION

Not to Scale

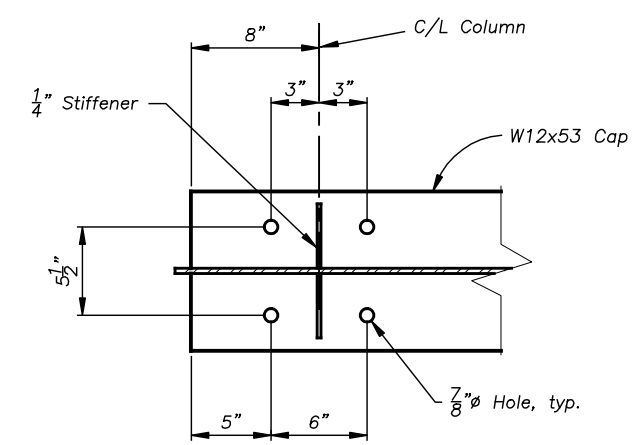

2/7 SECTION

Not to Scale

BY	DATE	REVISION DESCRIPTION

DESIGN CT PROJ. NO. 5282
DRAWN CT DATE MAY 07
CHECKED MJ SURVEYED DJ&A

DJ&A, P.C. CONSULTING ENGINEERS & LAND SURVEYORS

USFS - CLEARWATER N.F.
COLT CREEK CABIN TRAIL
BRIDGE REPLACEMENT

PIER NO. 1 GENERAL LAYOUT

SHEET 7 OF 14