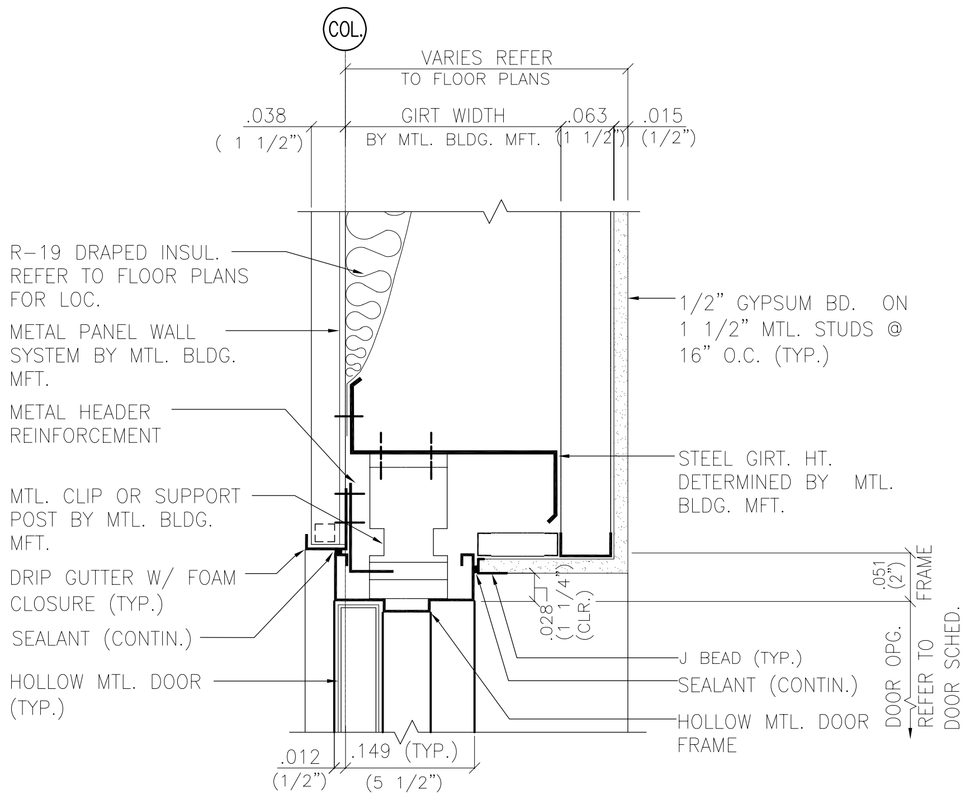

HEAD

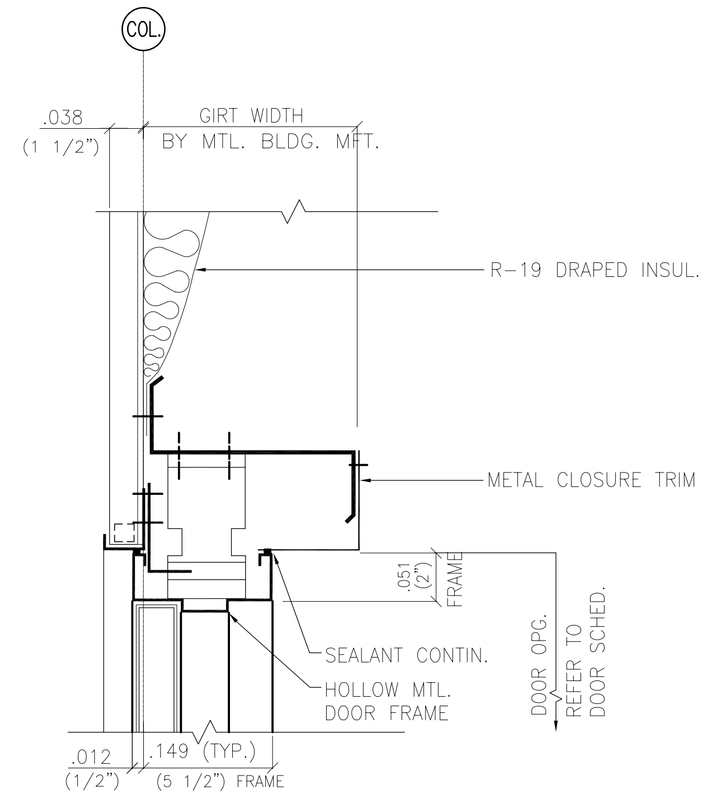

HEAD

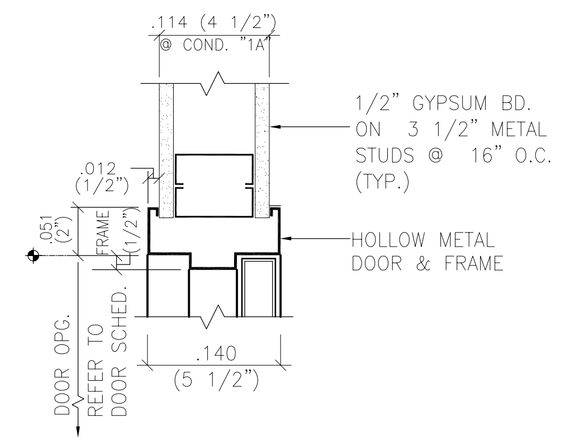

HEAD

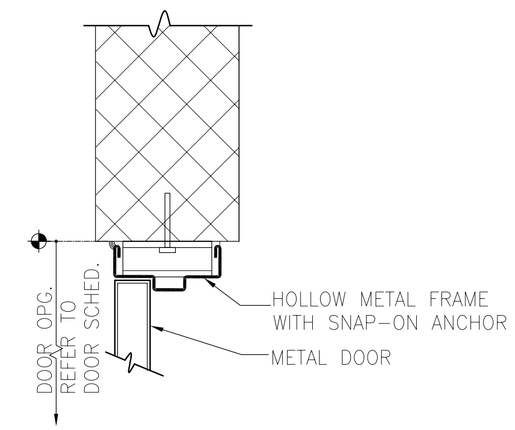

HEAD

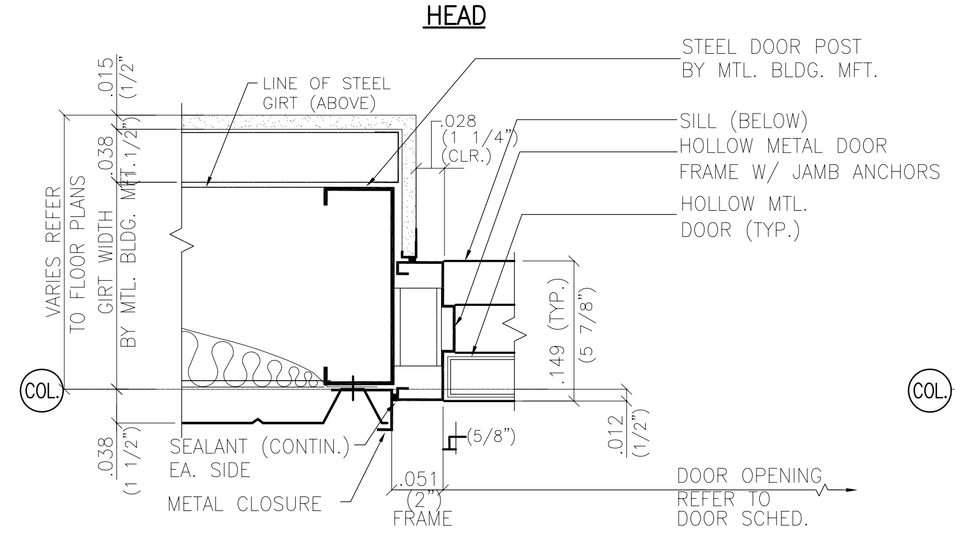

JAMB

NOTE: REFER TO HEAD DETAIL, DWG. (3/A-34) FOR ADDITIONAL TYP. NOTES.

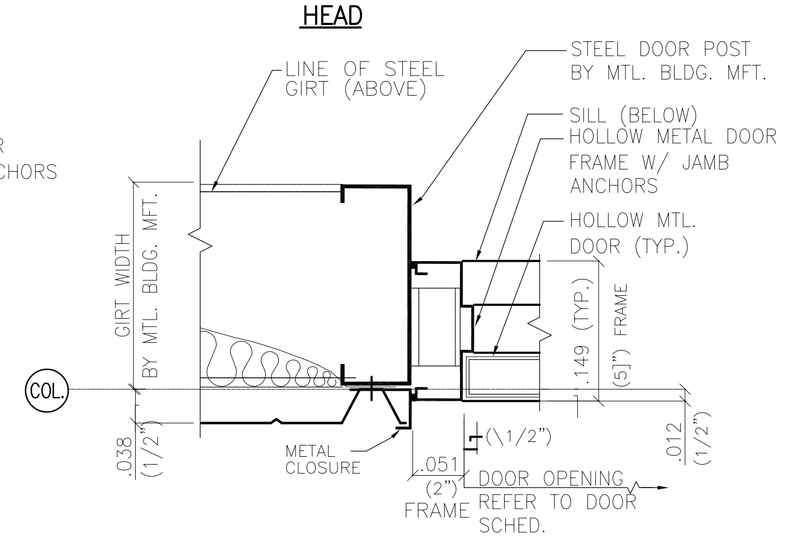

JAMB

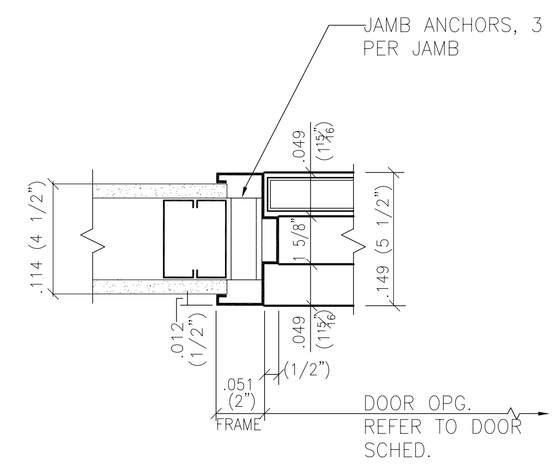

JAMB

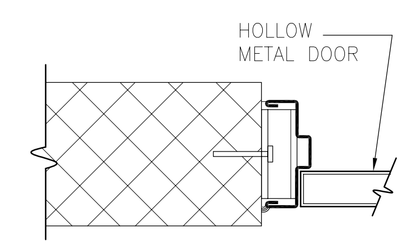

JAMB

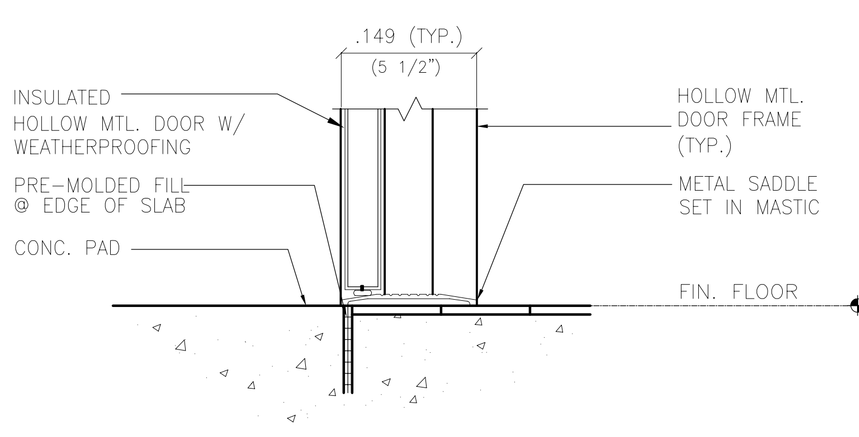

SILL

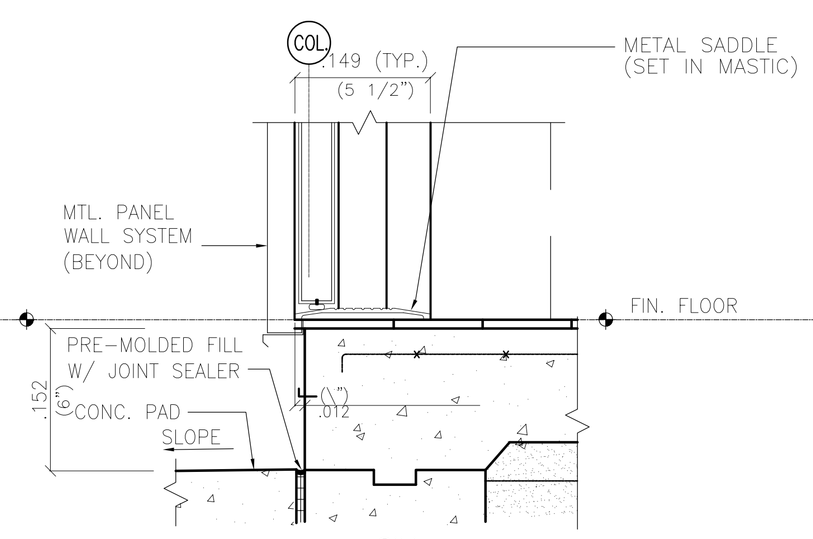

SILL

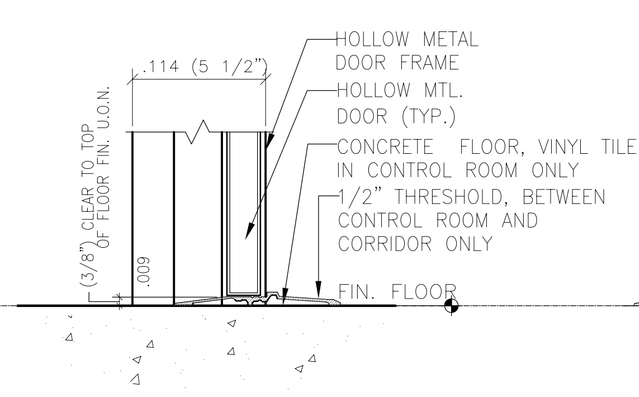

SILL

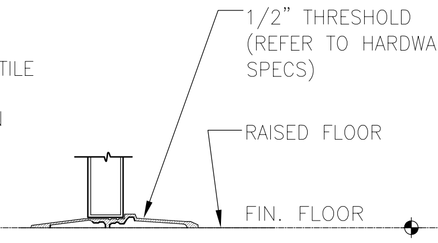

SILL

1/A07 TYPE 1
SCALE: NTS

2/A07 TYPE 2
SCALE: NTS

3/A07 TYPE 3
SCALE: NTS

4/A07 TYPE 4
SCALE: NTS

NOTES:

1. FOR ABBREVIATIONS/SYMBOLS REFER TO SHEET T-01.
2. FOR METAL BUILDING MFT. DWGS. REFER TO KIRBY BUILDING SYSTEM SHOP & ERECTION DWGS.
3. FOR FLOOR FINISHES REFER TO FINISH SCHEDULE SHEET A-08.
4. FOR FINISH FLOOR ELEVATIONS REFER TO BUILDING SECTIONS.
5. ALL METRIC DIMENSIONS NOTED IN METERS U.O.N..

ASBUILT

GRAPHIC SCALE:

SEAL:

REV	DESCRIPTIONS	DATE	APPD.

REVISION

INTERNATIONAL BROADCASTING BUREAU
ENGINEERING & TECHNICAL OPERATIONS
WASHINGTON, D.C. 20547

		DATE
DRAWN	HAK	10/06/04
CHK. BY.	JPB	11/06/04
ENGR.	JPB	11/06/04

APPROVALS
PROJ. MANAGER TC

SHORTWAVE EXPANSION PROJECT
DOOR DETAILS
KUWAIT

IQC No. XX-XX-XX
TASK No. X
PROJ. No. 03NC080
CAD DESIGN FILE NAME: FILENAME

DWG. No. BMB-AS-A-07 — A07

SCALE: AS SHOWN SHEET 1 OF SHT

30 Gatzel Drive, Wayne, NJ. 07470
TEL : (973) 785-4646
FAX : (973) 785-0786
www.hansonengineers.com
HANSON Design Build Project Partners, Inc.
THALES INTERNATIONAL & ENGINEERING
675 North Washington St., Alexandria, VA. 22314
TEL : (703) 836-5644
FAX : (703) 836-3264
www.thales-bti.com