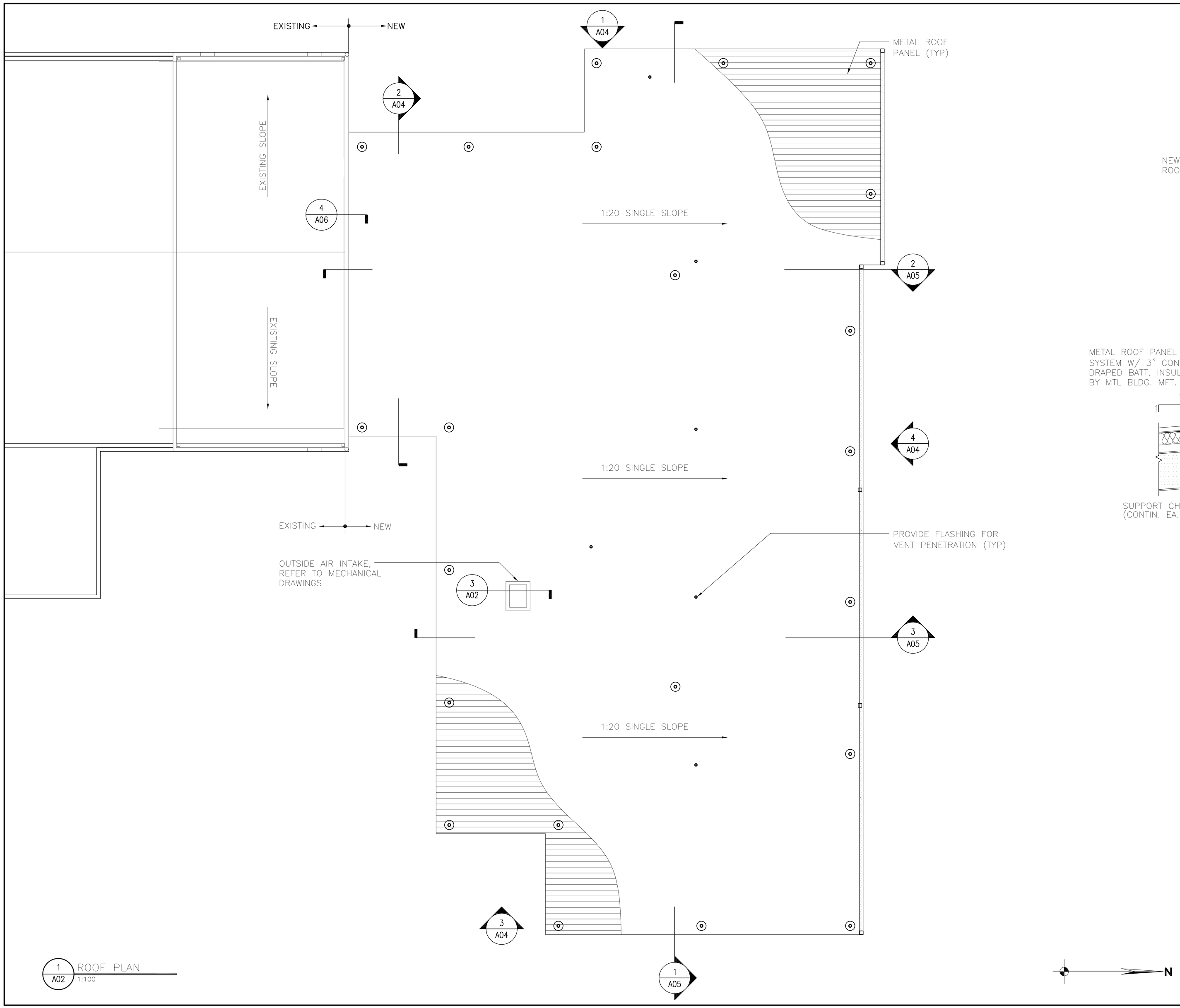

1 A02 ROOF PLAN
1:100

LEGEND

2 A05 — SECTION OR ELEVATION TAG

6" METAL GUTTER AND 4" DOWNSPOUT

VENT TO ROOF, REFER TO MECHANICAL DRAWINGS

AIR TERMINALS, REFER TO ELECTRICAL DRAWINGS FOR DETAILS

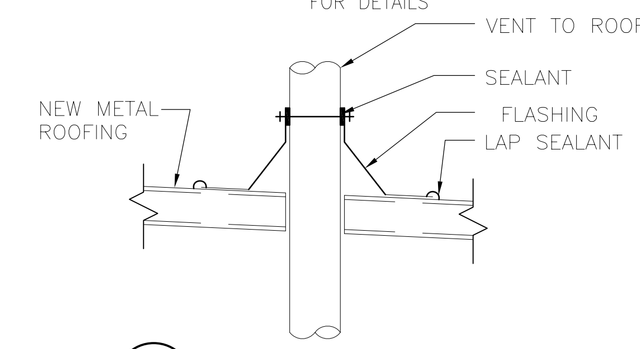

2 A02 PIPE FLASHING DETAIL
NTS

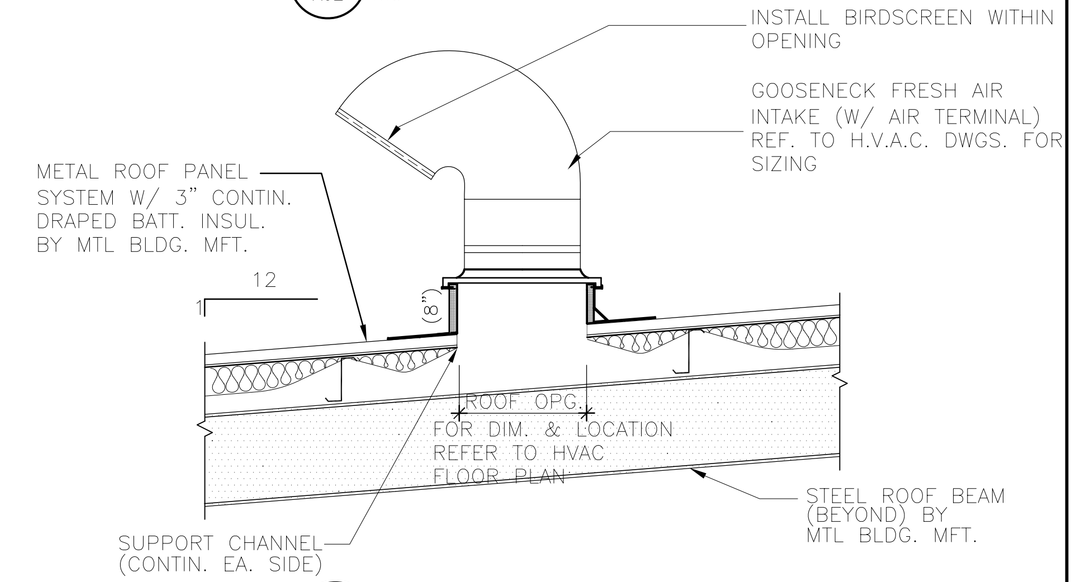

3 A02 ROOF OPENING DETAIL
NTS

ASBUILT

GRAPHIC SCALE:
0 1m 2m 5m
SCALE: 1:100 (METRIC)
0 4ft 8ft 16ft
SCALE: .12":1' (ENGLISH)
SCALE FACTOR – 100

SEAL:

REV	DESCRIPTIONS	DATE	APPD.
	REVISION		

INTERNATIONAL BROADCASTING BUREAU
ENGINEERING & TECHNICAL OPERATIONS
WASHINGTON, D.C. 20547

Bader AlMulla & Bros. Co. W.L.L
Engineering Group

		DATE
DRAWN	HAK	10/06/04
CHK. BY.	JPB	11/07/04
ENGR.	JPB	11/06/04

APPROVALS
PROJ. MANAGER TC

SHORTWAVE EXPANSION PROJECT
ROOF PLAN
KUWAIT

IQC No. XX-XX-XX
TASK No. X
PROJ. No. 03NC080

DWG. No. BMB-AS-A-02 — A02

SCALE: AS SHOWN

• 90 Gabel Drive, • Wayne, N.J. 07470 • TEL : (973) 792-4045 • FAX : (973) 785-0786 • www.hansonengineers.com
HANSON
THALES BROADCAST & MULTIMEDIA
679 North Washington St. • Alexandria, VA. 22314 • TEL : (703) 836-5844 • FAX : (703) 836-3264 • www.thales-bm.com