DEFENSE DISTRIBUTION CENTER SUSQUEHANNA PENNSYLVANIA

NEW CUMBERLAND, PENNSYLVANIA

REPLACEMENT TO HVAC SYSTEM IN BUILDING 69

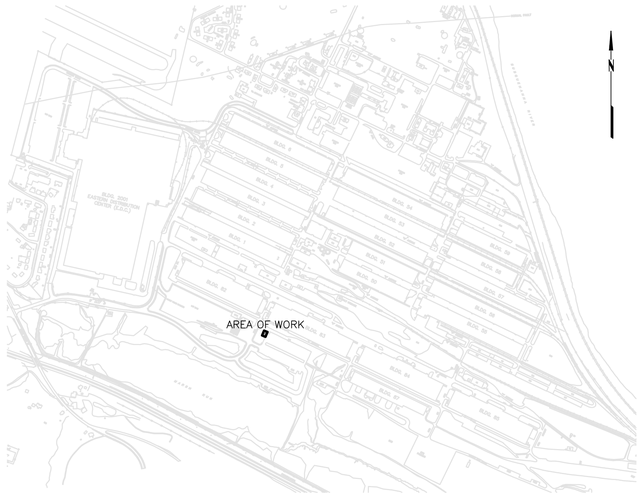

DDSP AERIAL PLAN

SCALE: NO SCALE

DRAWING INDEX

SHEET #	DRAWING # – DRAWING NAME
	GENERAL
1	CS–1 – COVER SHEET
	MECHANICAL
2	M–1 – BUILDING 69 PLANS AND SCHEDULES
3	M–2 – HVAC DETAILS AND DIAGRAMS

HVAC COMPONENTS

- 12X20 — DUCT, FIRST VALUE IS SIDE SHOWN
- FLEXIBLE DUCT
- LOW VOLTAGE OR CONTROL WIRING
- T — THERMOSTAT
- CEILING MOUNTED GRILLE OR REGISTER
- DIFFUSER, 4–WAY BLOW

PLAN

- NEW / EXISTING — CONNECTION TO EXISTING
- REMOVE TO POINT
- 1 — REVISION REFERENCE
- 1 — SHEET KEYNOTES
- AREA AFFECTED BY REVISION.
- ELEMENTS TO BE DEMOLISHED

ABBREVIATIONS

ACCU	AIR COOLED CONDENSING UNIT	GAL	GALLONS
ACU	AIR CONDITIONING UNIT	GPM	GALLONS PER MINUTE
AD	ACCESS DOOR OR AIR DRYER	HVAC	HEATING, VENTILATING & AIR CONDITIONING
AHU	AIR HANDLING UNIT	HZ	FREQUENCY
APPROX	APPROXIMATE	INFO	INFORMATION
AVG	AVERAGE	IN WC	INCHES IN WATER COLUMN
BDD	BACKDRAFT DAMPER	KW	KILOWATTS
BTU	BRITISH THERMAL UNITS	LAT	LEAVING AIR TEMPERATURE
BTUH	BRITISH THERMAL UNITS PER HOUR	LBS	POUNDS
CD	CEILING DIFFUSER	LDB	LEAVING DRY BULB TEMPERATURE
CFM	CUBIC FEET PER MINUTE	LWB	LEAVING WET BULB TEMPERATURE
CONN	CONNECTION	LWT	LEAVING WATER TEMPERATURE
CR	CEILING RETURN	MBH	1000 BTUH
CUH	CABINET UNIT HEATER	NC	NORMALLY CLOSED OR NOISE CRITERIA
DB	DRY BULB	NTS	NOT TO SCALE
DN	DOWN	OA	OUTSIDE AIR
DWG	DRAWING	PD	PRESSURE DROP
DX	DIRECT EXPANSION	PSI	POUNDS PER SQUARE INCH
EA	EXHAUST AIR	RA	RETURN AIR
EAT	ENTERING AIR TEMPERATURE	RG	RETURN GRILLE
EDB	ENTERING DRY BULB TEMPERATURE	RR	RETURN REGISTER
EF	EXHAUST FAN	SA	SUPPLY AIR
EG	EXHAUST GRILLE	SF	SUPPLY FAN
EL	ELEVATION	SHT	SHEET
ER	EXHAUST REGISTER	SP	STATIC PRESSURE
ESP	EXTERNAL STATIC PRESSURE	SPEC	SPECIFICATION
EUH	ELECTRIC UNIT HEATER	SS	STAINLESS STEEL
EWB	ENTERING WET BULB TEMPERATURE	STD	STANDARD
EWC	ELECTRIC WATER COOLER	TEMP	TEMPERATURE
EWT	ENTERING WATER TEMPERATURE	TG	TRANSFER GRILLE
EXIST	EXISTING	TYP	TYPICAL
FD	FIRE DAMPER OR FLOOR DRAIN	UH	UNIT HEATER
FMS	FACILITY MANAGEMENT SYSTEM (HVAC)	UL	UNDERWRITERS LABORATORIES
FPM	FEET PER MINUTE	WB	WET BULB
FPS	FEET PER SECOND	WPD	WATER PRESSURE DROP
FT	FEET		

INTERPRETATION OF DRAWINGS

1. THE MECHANICAL DRAWINGS CANNOT BE FULLY AND CORRECTLY INTERPRETED WITHOUT REFERENCE TO SPECIFICATIONS SYMBOLS, SCHEDULES, AND ABBREVIATIONS.
2. ANY OF THE SYMBOLS AND ABBREVIATIONS MAY APPEAR ON THE DRAWINGS, USE ONLY THOSE PERTAINING TO THESE DOCUMENTS.
3. THE MECHANICAL DRAWINGS ARE DIAGRAMMATIC AND ARE INTENDED TO INDICATE CAPACITY, SIZE, APPROXIMATE LOCATION AND GENERAL ARRANGEMENT, NOT THE SPECIFIC DETAILS OF CONSTRUCTION AND INTERCONNECTION OF SYSTEMS.

NO.	REVISIONS	DATE

APPROVED BY

CONSTRUCTION REPRESENTATIVE	OFFICE OF COMMAND SECURITY
ENVIRONMENTAL BRANCH	SAFETY AND HEALTH
FIRE PROTECTION BRANCH	OFC. OF TEL. AND COMM. INFO. SYSTEMS
INDUSTRIAL HYGIENIST	USER
MAINTENANCE OPERATION BRANCH	
ROB MONTEFOUR	FACILITIES ENGINEER

DEFENSE LOGISTICS AGENCY
DEFENSE DISTRIBUTION DEPOT SUSQUEHANNA, PENNSYLVANIA
FACILITIES ENGINEERING DIVISION, ENGINEERING BRANCH
NEW CUMBERLAND, PA 17070–5002

REPLACEMENT TO HVAC SYSTEM IN BUILDING 69

COVER SHEET

DESIGNED BY: PWH/GWS	CHECKED BY:	PROJECT NO. 3629
DRAWN BY: EMC	CIVIL ENGR.	DRAWING NO. CS–1
SCALE: AS NOTED	ELEC. ENGR.	SHEET 1 OF 3
	MECH. ENGR.	
	ARCHITECT	DATE JULY 08
	SUPR. ENGR.	

FILE NAME: K:\356\49176 DDSP EDC\Building 69\49176-CS-1-COVER.dwg, 7/28/2008 2:27:22 PM

OIL FIRED FURNACE & SPLIT SYSTEM HEAT PUMP UNIT SCHEDULE

TAG	CFM	OA CFM	FAN HP	ESP (IN. WC)	INDOOR UNIT DATA													OUTDOOR UNIT DATA							APPROX. OPERATING WT. (LBS)	REMARKS	MANUFACTURER MODEL
					COOLING				OIL FURNACE HEATING		ELEC DATA				GPH INPUT	HEAT PUMP HEATING			ELECTRICAL DATA								
					TOTAL MBH	SENS. MBH	EDB/EWB (°F)	LDB/LWB (°F)	MBH OUTPUT	CKT FLA	MAX FUSE AMP	VOLTS	PHASE	HERTZ		MBH OUTPUT	MIN COP @15 F AMBT	DESIGNATION	SEER	CKT FLA	MAX FUSE AMP	VOLTS	PHASE	HERTZ			
FDX - 101	1000	100	1/3	0.5	29.5	22.6	76.4/64.1	55.0/54.2	57	12.2	15	120	1	60	0.5	17.2	2.5	HCU-101	14	25	30	208	1	60			RUUD/CARRIER

NOTE: CONDENSING UNIT COOLING CAPACITY BASED ON 95F ABMIENT AIR TEMPERATURE

ELECTRIC WALL HEATER SCHEDULE

TAG	TYPE	KW	BTUH	ELECTRICAL DATA			FAN MOTOR HP	HEATING STAGES	AIRFLOW (CFM)	REMARKS
				VOLTS	PHASE	HERTZ				
EWH-A	SEMI-RECESSED	1.5	5.1	208	1	60	-	1	-	INTEGRAL THERMOSTAT

FAN SCHEDULE

TAG	SERVING	TYPE	AIRFLOW (CFM)	ESP (IN W.G.)	DRIVE	MAX RPM	MOTOR H.P.	ELECTRICAL DATA			METHOD OF CONTROL	REMARKS
								VOLTS	PHASE	HERTZ		
F-101	LADIES ROOM	CEILING	150	0.375	DIRECT	1200	1/6	120	1	60	12 HR TIMER WALL SWITCH	
F-102	MENS	CEILING	225	0.375	DIRECT	1400	1/4	120	1	60	12 HR TIMER WALL SWITCH	

1. PROVIDE WITH SOLID STATE SPEED CONTROLLER MOUNTED ON SIDE OF FAN FOR VOLUME CONTROL

ELECTRIC UNIT HEATER SCHEDULE

TAG	TYPE	KW	BTUH	ELECTRICAL DATA			FAN MOTOR HP	HEATING STAGES	AIRFLOW (CFM)	REMARKS
				VOLTS	PHASE	HERTZ				
EUH-A	HORIZONTAL	5.0	17.1	208	1	60	-	1	-	

REGISTER, GRILLE, AND DIFUSER SCHEDULE

TAG	MAX CFM	DUCT SIZE (IN)	DESCRIPTION	S.P. (IN WG)	VERTICAL THROW (FT.) AT 100 FPM	REMARKS AND DIRECTION OF FLOW	MAX NC LEVEL	MANUFACTURER MODEL BASIS OF DESIGN
CD-A	110	6	CEILING DIFFUSER	0.12	-	24 X 24 PANEL	20	TITUS TCD
CD-B	225	8	CEILING DIFFUSER	0.12	-	24 X 24 PANEL	20	TITUS TCD
CD-C	400	10	CEILING DIFFUSER	0.16	-	25 X 24 PANEL	30	TITUS TCD
EG-A	1500	22 x 22	EGG CRATE GRILLE	0.025		24 X 24 EGG CRATE FILTER REGISTER	15	TITUS 50

SHEET KEY NOTES

1. DEMOLISH EXISTING DIFFUSER/GRILLE/REGISTER.
2. DEMOLISH EXISTING OIL FIRED FURNACE, DIRECT EXPANSION COOLING COIL, REFRIGERANT PIPING, CONDENSATE PIPING AND CONDENSING UNIT. PREPARE EXISTING DUCTWORK, EXHAUST FLUE, AND FUEL OIL PIPING FOR CONNECTION TO NEW FURNACE. DEMOLISH DRY WALL CEILING AS NECESSARY FOR DEMOLITION AND NEW CONSTRUCTION WORK.
3. DEMOLISH EXISTING SUPPLY DUCTWORK AND DIFFUSERS TO RESTROOMS.
4. CONNECT NEW DIFFUSER TO EXISTING DUCTWORK. EXISTING FLEXIBLE RUNNOUT MAY BE REUSED IF THERE ARE NO RIPS OR TEARS IN THE DUCTWORK OR INSULATION/VAPOR BARRIER, OTHERWISE REPLACE FLEXIBLE DUCTWORK IN KIND.
5. CONNECT EXISTING DUCTWORK, EXHAUST VENT, FUEL OIL PIPING, REFRIGERANT PIPING, AND CONDENSATE PIPING TO NEW OIL FIRED FURNACE / DIRECT EXPANSION COIL / HEAT PUMP CONDENSING UNIT. REPLACE EXISTING DRY WALL CEILING IN KIND.
6. SET HCU-101 ON 12" HIGH CONCRETE PAD (PAD 8" ABOVE GRADE).
7. FILTER PULL
8. REFRIGERANT PIPING, SIZED PER MANUFACTURER'S RECOMMENDATION.
9. ¾" CONDENSATE DRAIN; SPILL TO GRADE.
10. DEMOLISH EXISTING CONDENSING UNIT RAILROAD TIE SUPPORT; DDSP HAS SALVAGE FIRST RIGHT OF REFUSAL.
11. 6" OUTDOOR AIR WALL CAP WITH 1/4" BIRDSCREEN.
12. 6" OUTDOOR AIR DUCT WITH MOTORIZED DAMPER. OUTSIDE AIR DAMPER OPENS WHEN UNIT IS IN OCCUPIED MODE.
13. 96" HIGH CHAIN LINK FENCE WITH CHAIN LINK LID (TOP). PROVIDE GEOTECH FABRIC AND RIVERWASH STONE WITHIN FENCED AREA AND 6" FROM CENTERLINE OF FENCE TO PREVENT WEED INTRUSION.
14. ½" NON-FREEZE DOMESTIC WATER HOSE BIB.
15. CONNECT ½" DOMESTIC WATER PIPING TO HOSE BIB DOWNSTREAM OF WATER METER AND BACKFLOW PREVENTION DEVICES.
16. IN RESTROOMS DEMOLISH EXISTING LAYIN CEILING TILES AND BATT INSULATION ON CEILING TILES. CEILING GRID TO REMAIN.
17. IN REST ROOMS REPLACE CEILING TILES WITH CERAMIC MINERAL COMPOSITE LAYIN CEILING TILE WITH FACTORY APPLIED PLASTIC FINNISH, ARMSTRONG CERAMGUARD OR EQUIVALENT FIBERGLASS BATT INSULATION LAID ON THE CEILING TILES WITH THE VAPOR BARRIER FACING DOWN.
18. DISCONNECT EXISTING UNIT AND RECONNECT USING EXISTING CONDUCTORS AND CONDUIT (EXTEND AND MODIFY AS REQUIRED) PROVIDE NEW EXTERNAL 30A NON-FUSED DISCONNECT SWITCH.
19. REPLACE 50A/3P CIRCUIT BREAKER WITH 30A/3P CIRCUIT BREAKER IN EXISTING PANELBOARD FOR OUTDOOR UNIT ON FDX-101. FURNISH 3# 10+1 #10 GRD -¾"C. INDOOR UNIT SHALL BE RE-WIRED TO EXISTING CIRCUIT.
20. CONTRACTOR SHALL INSTALL FOUR (4) TANDEM CIRCUIT BREAKERS (SQUARE D 60T; 20/20 AMP CONSTRUCTION). TO COMBINE CIRCUITS 1, 3, 5, 7, 9, 11, 13, AND 15. DOING THIS WILL FREE UP FOUR POLES FOR CIRCUITING TO THE ELECTRIC UNIT HEATERS. TWO (2) ELECTRIC WALL HEATER SHALL BE CIRCUITED TO ONE 208V/1P; 30A BREAKER AND THE OTHER UNIT HEATER SHALL BE CIRCUITED TO THE OTHER 208V/1P; 30A BREAKER.
21. CIRCUITS 9 AND 11 EXISTING PANEL Z001 (30A; #10 AWG -3/4" C).
22. CIRCUITS 13 AND 15 EXISTING PANEL Z001 (30A; #10 AWG -3/4" C).

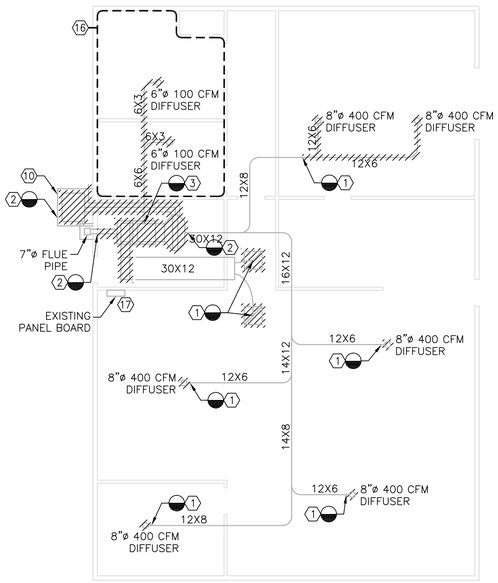

BUILDING 69 DEMOLITION PLAN

SCALE: 1/8" = 1'-0"

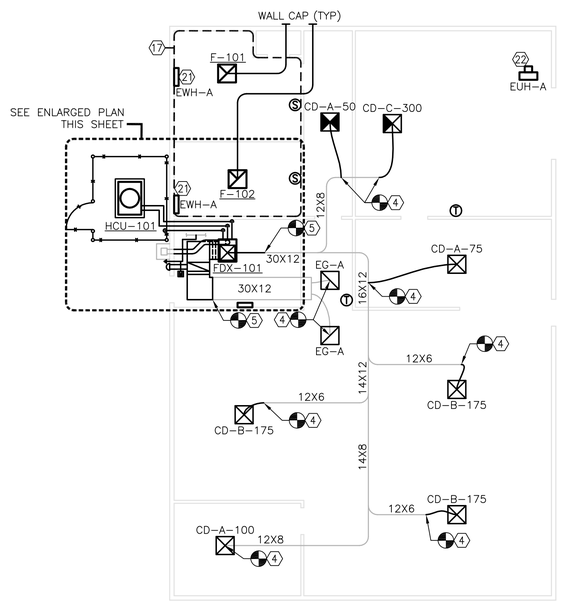

BUILDING 69 NEW WORK PLAN

SCALE: 1/8" = 1'-0"

1' 0 4' 8' 16'

1/8" = 1'-0"

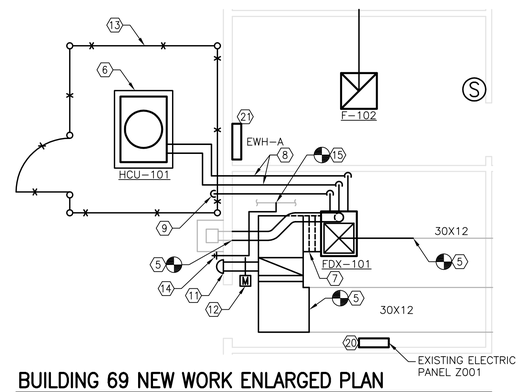

BUILDING 69 NEW WORK ENLARGED PLAN

SCALE: 1/4" = 1'-0"

1' 0 2' 4' 8'

1/4" = 1'-0"

NO.	REVISIONS	DATE

APPROVED BY

CONSTRUCTION REPRESENTATIVE	OFFICE OF COMMAND SECURITY
ENVIRONMENTAL BRANCH	SAFETY AND HEALTH
FIRE PROTECTION BRANCH	OFC. OF TEL. AND COMM. INFO. SYSTEMS
INDUSTRIAL HYGIENIST	USER
MAINTENANCE OPERATION BRANCH	
ROB MONTEFOUR	FACILITIES ENGINEER

DEFENSE LOGISTICS AGENCY

DEFENSE DISTRIBUTION DEPOT SUSQUEHANNA, PENNSYLVANIA
FACILITIES ENGINEERING DIVISION, ENGINEERING BRANCH
NEW CUMBERLAND, PA 17070-5002

REPLACEMENT TO HVAC SYSTEM IN BUILDING 69

BUILDING 69 PLANS AND SCHEDULES

DESIGNED BY: PWH/GWS	CHECKED BY:	PROJECT NO. 3629
DRAWN BY: EMC	CIVIL ENGR.	DRAWING NO. M-1
SCALE: AS NOTED	ELEC. ENGR.	SHEET 2 OF 3
	MECH. ENGR.	
	ARCHITECT	DATE JULY 08
	SUPR. ENGR.	

FILE NAME: K:\356\49176 DDSP EDC\Building 69\49176-M-2-PLAN.dwg, 7/28/2008 1:51:21 PM

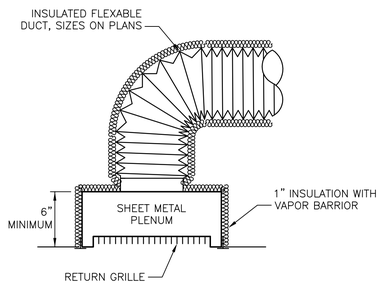

EGG CRATE RETURN GRILLE DETAIL

SCALE: NTS

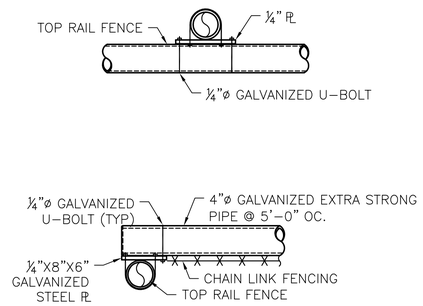

SECURITY COVER FENCE DETAILS

SCALE: NTS

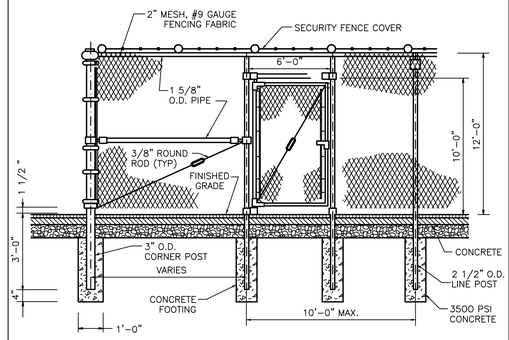

SECURITY FENCE DETAIL

SCALE: NTS

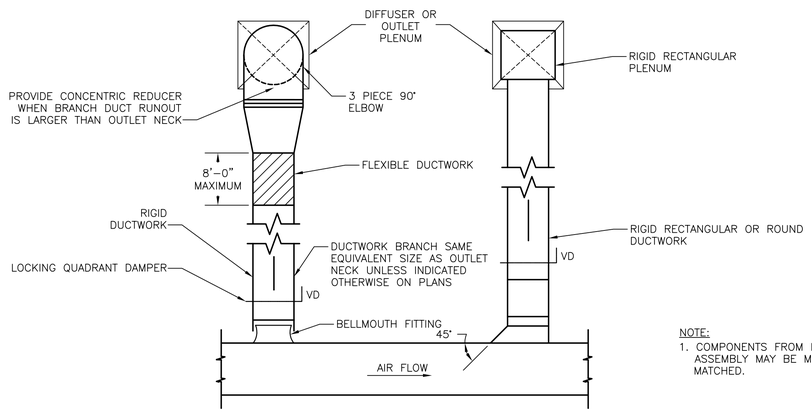

NOTE:
1. COMPONENTS FROM EITHER ASSEMBLY MAY BE MIXED AND MATCHED.

AIR OUTLET BRANCH ASSEMBLY

15810-02

SCALE: NTS

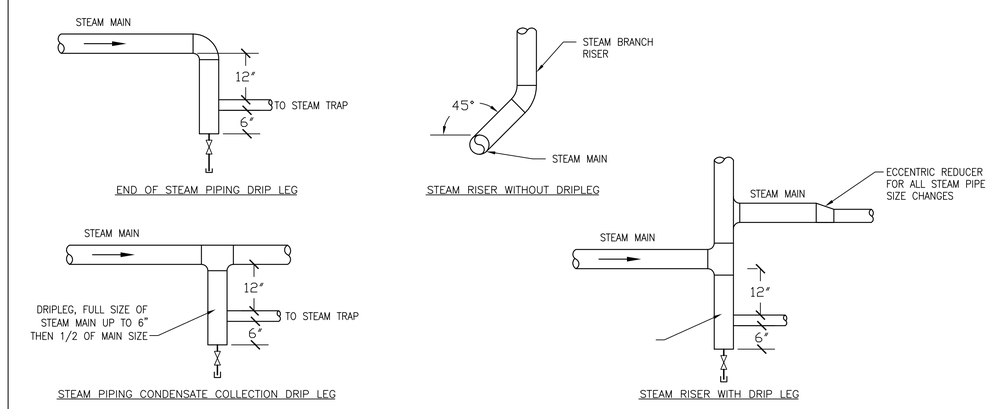

STEAM RISERS & CONDENSATE COLLECTION DRIPLEG ASSEMBLIES

15120-60

SCALE: NTS

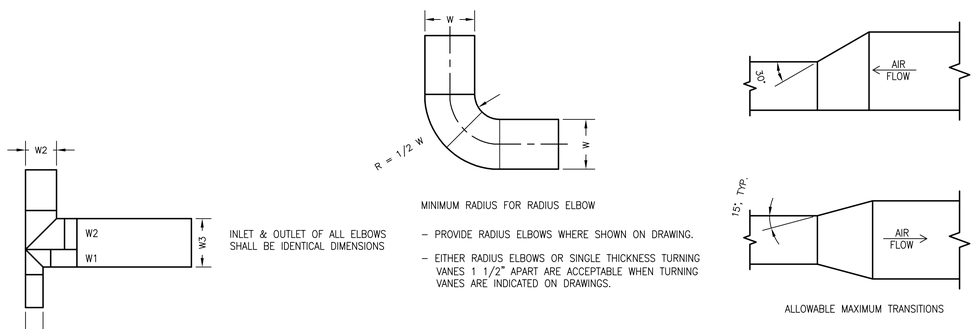

- PROVIDE RADIUS ELBOWS WHERE SHOWN ON DRAWING.
- EITHER RADIUS ELBOWS OR SINGLE THICKNESS TURNING VANES 1 1/2" APART ARE ACCEPTABLE WHEN TURNING VANES ARE INDICATED ON DRAWINGS.

DUCTWORK ASSEMBLY RESTRICTIONS

15810-01

SCALE: NTS

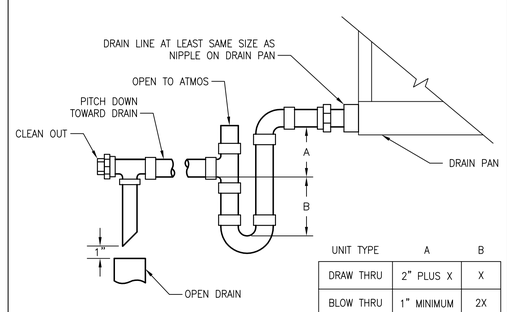

UNIT TYPE	A	B
DRAW THRU	2" PLUS X	X
BLOW THRU	1" MINIMUM	2X

WHERE X = STATIC PRESSURE IN PAN

NOTE TO DESIGNER: CODE REQUIRED AUXILIARY DRAIN PANS UNDER UNITS THAT MAY "DAMAGE BUILDING COMPONENTS." IF OVERFLOWED SEE IMC 307.2

AIR CONDITIONING CONDENSATE DRAIN TRAP

15720-20

SCALE: NTS

NO.	REVISIONS	DATE

APPROVED BY

CONSTRUCTION REPRESENTATIVE	OFFICE OF COMMAND SECURITY
ENVIRONMENTAL BRANCH	SAFETY AND HEALTH
FIRE PROTECTION BRANCH	OFC. OF TEL. AND COMM. INFO. SYSTEMS
INDUSTRIAL HYGIENIST	USER
MAINTENANCE OPERATION BRANCH	
ROB MONTEFOUR	FACILITIES ENGINEER

DEFENSE LOGISTICS AGENCY
DEFENSE DISTRIBUTION DEPOT SUSQUEHANNA, PENNSYLVANIA
FACILITIES ENGINEERING DIVISION, ENGINEERING BRANCH
NEW CUMBERLAND, PA 17070-5002

REPLACEMENT TO HVAC SYSTEM IN BUILDING 69

DETAILS, SCHEDULES, DIAGRAMS, AND NOTES

DESIGNED BY: PWH/GWS	CHECKED BY:	PROJECT NO. 3629
DRAWN BY: EMC	CIVIL ENGR. / ELEC. ENGR. / MECH. ENGR. / ARCHITECT / SUPR. ENGR.	DRAWING NO. M-2
SCALE: AS NOTED		SHEET 3 OF 3
		DATE JULY 08

FILE NAME: K:\356\49176 DDSP EDC\Building 69\49176-M-3-DETAIL.dwg, 7/28/2008 2:26:31 PM