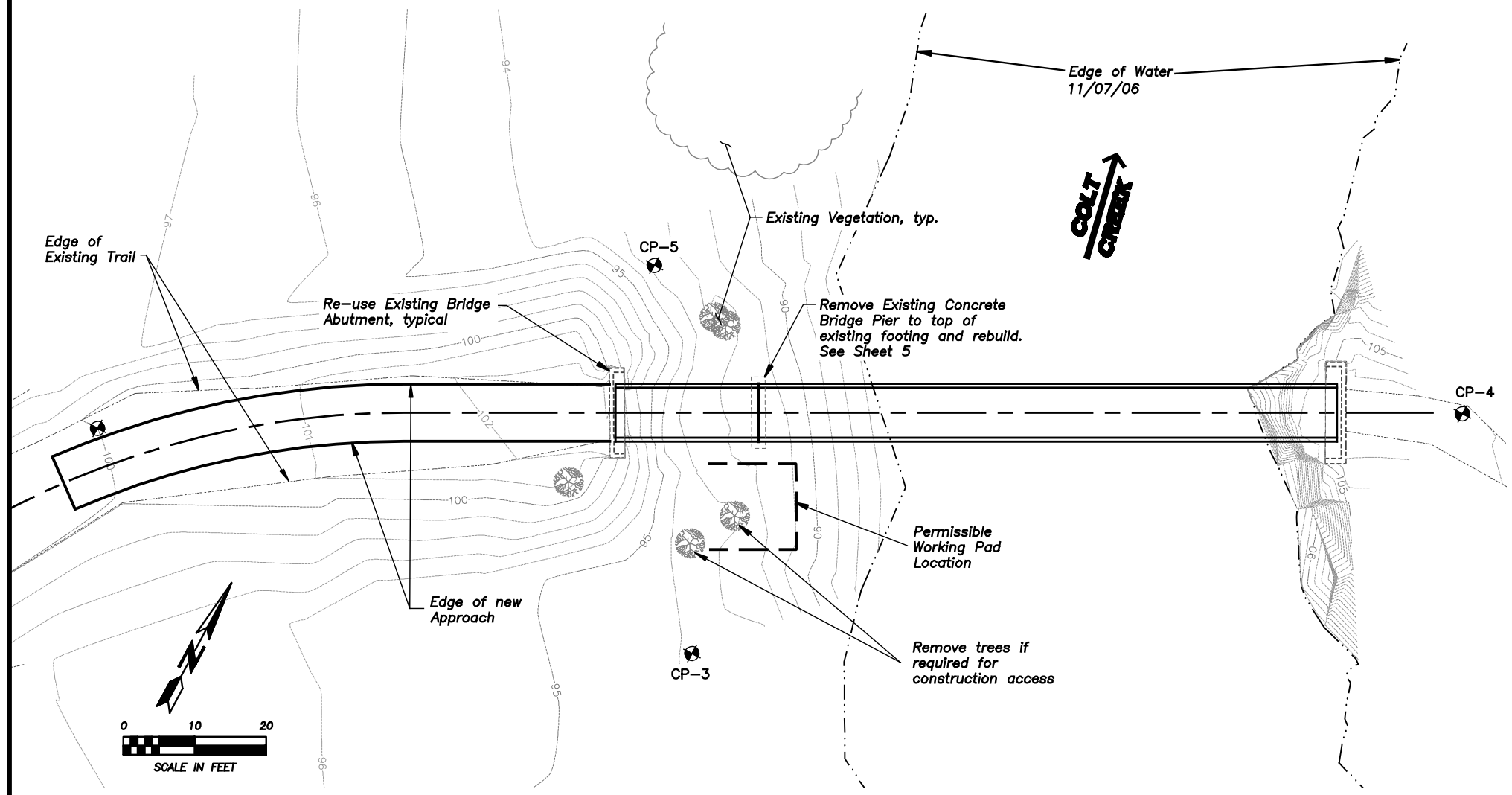

PLAN

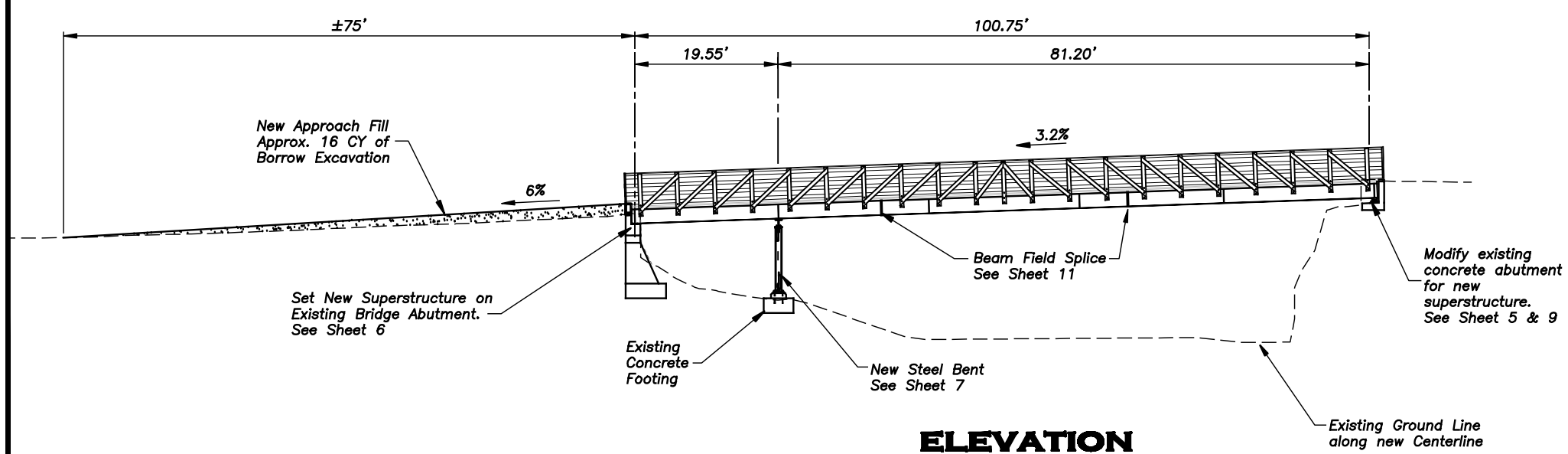

ELEVATION

Scale: 1" = 20'–0"

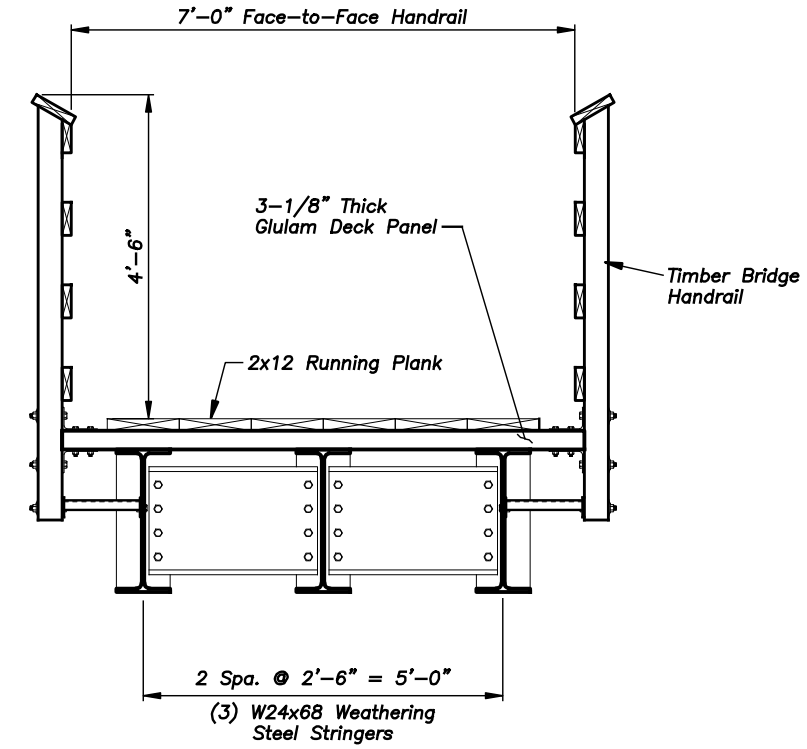

TYPICAL BRIDGE SECTION

Not to Scale

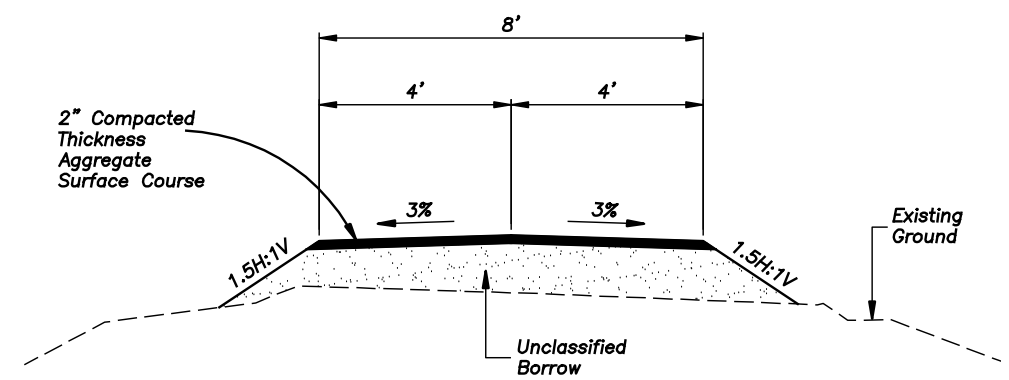

TYPICAL TRAIL SECTION

Not to Scale

BY	DATE	REVISION DESCRIPTION

DESIGN CT PROJ. NO. 5282
DRAWN CT DATE MAR. 2008
CHECKED MJ SURVEYED DJ&A

DJ&A, P.C.
CONSULTING ENGINEERS & LAND SURVEYORS

USFS - CLEARWATER N.F.
COLT CREEK CABIN TRAIL
BRIDGE REPLACEMENT

BRIDGE GENERAL LAYOUT

SHEET 3 OF 14