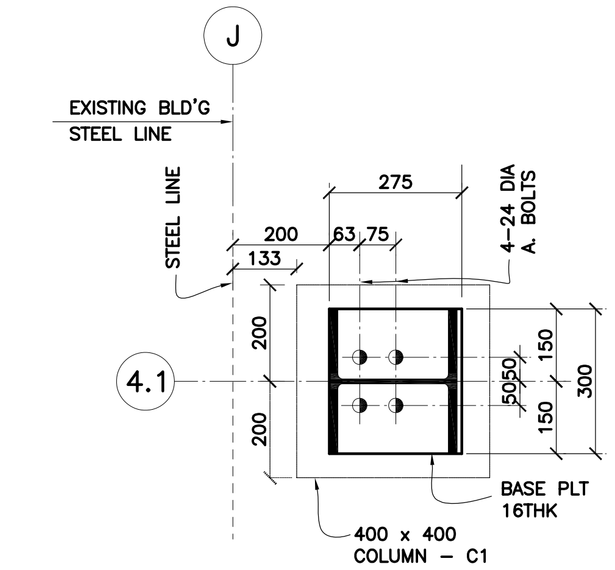

ANCHOR BOLT DETAIL (A)

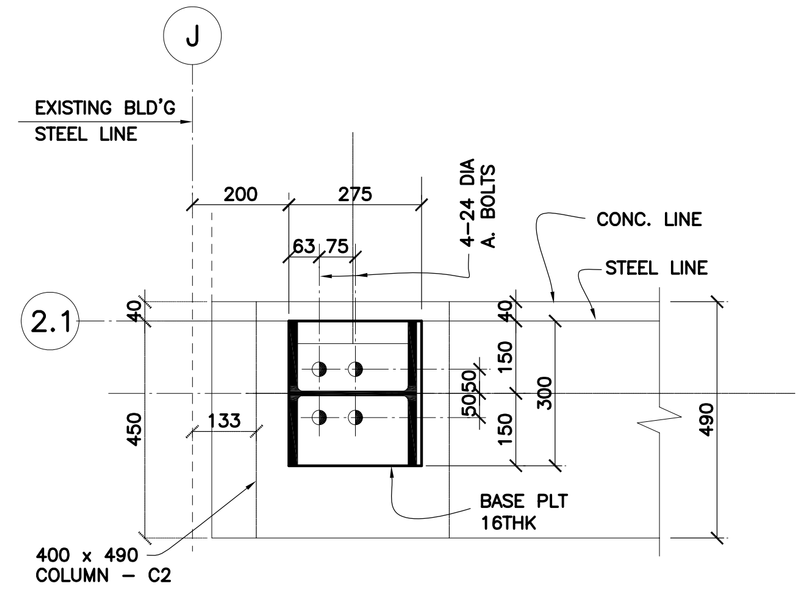

ANCHOR BOLT DETAIL (B)

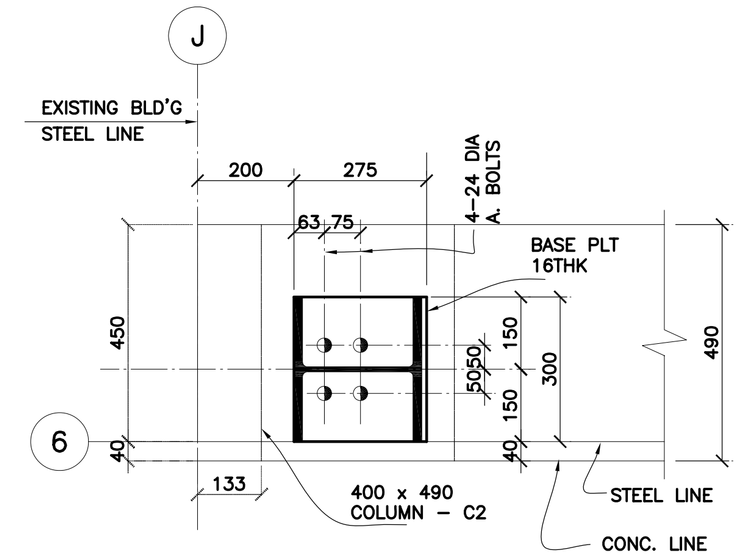

ANCHOR BOLT DETAIL (C)

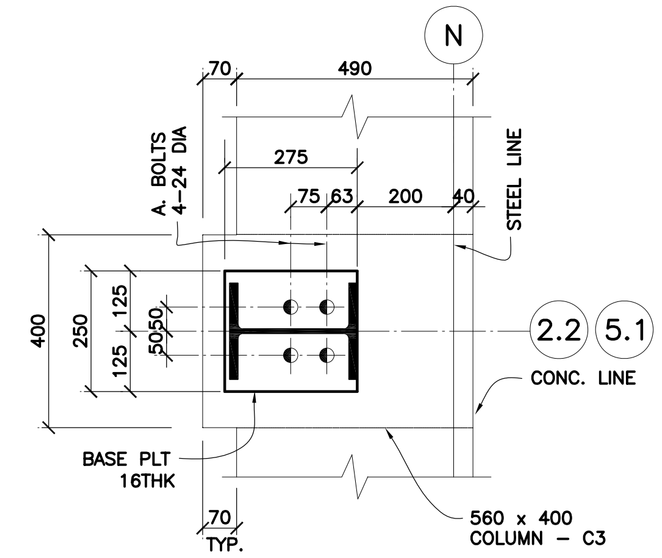

ANCHOR BOLT DETAIL (D)

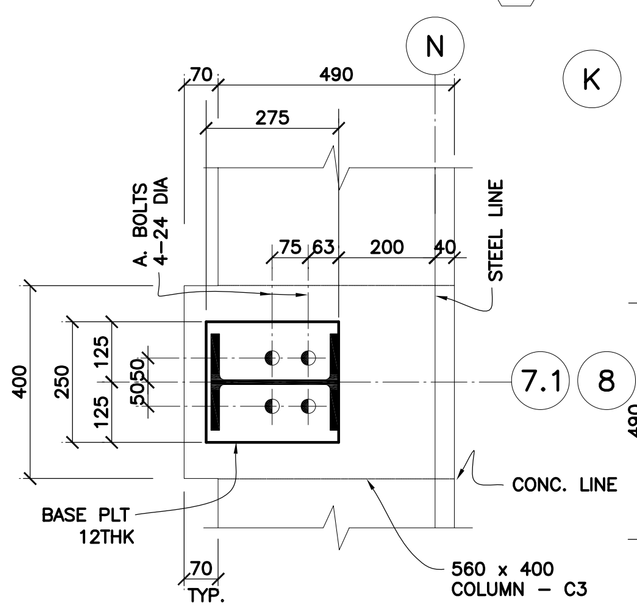

ANCHOR BOLT DETAIL (E)

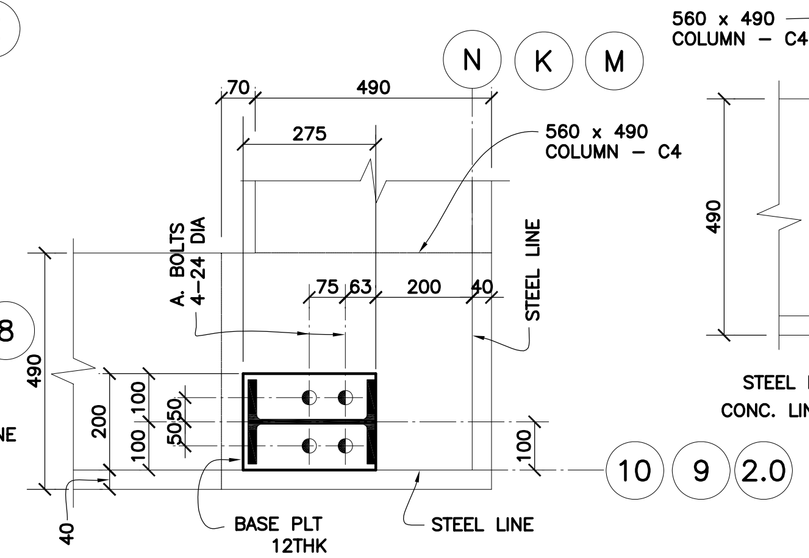

ANCHOR BOLT DETAIL (F)

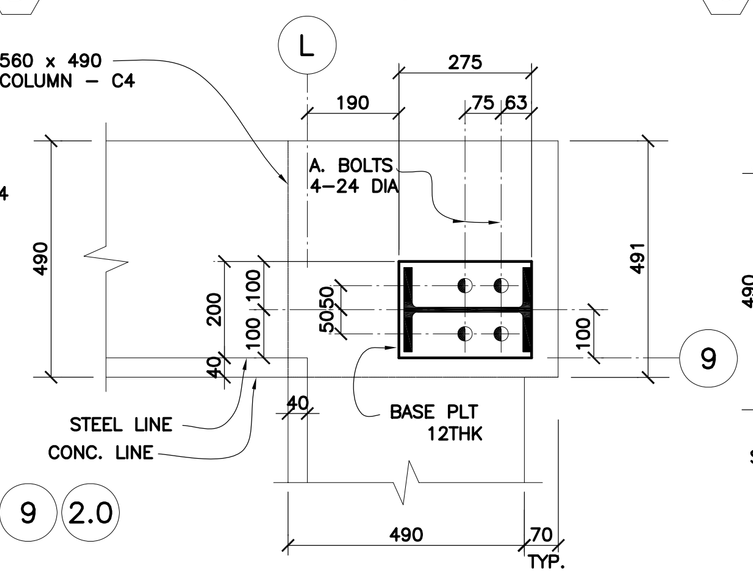

ANCHOR BOLT DETAIL (G)

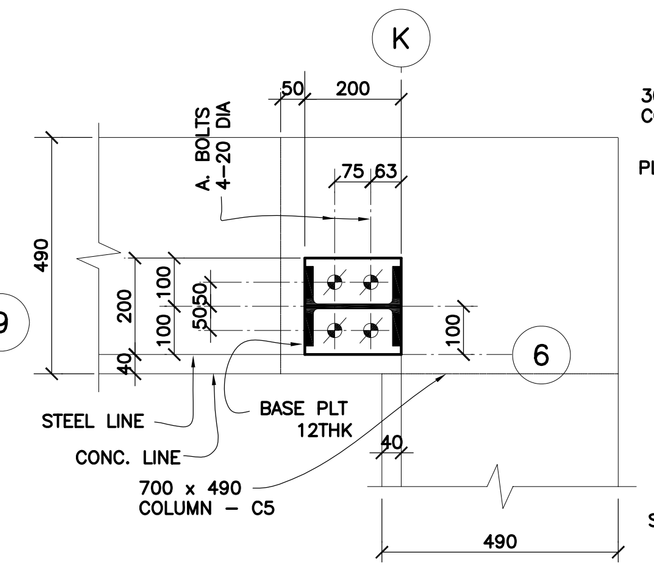

ANCHOR BOLT DETAIL (H)

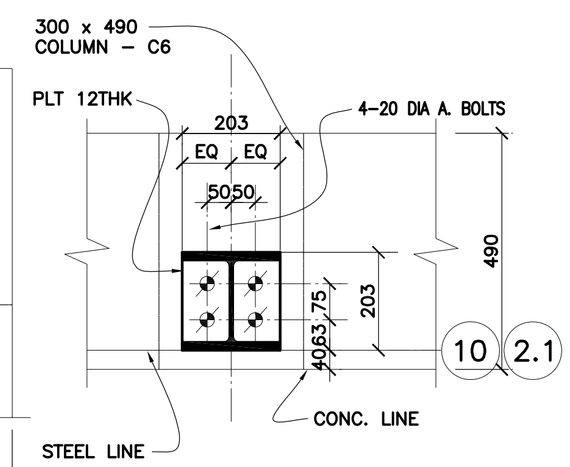

ANCHOR BOLT DETAIL (J)

AS BUILT

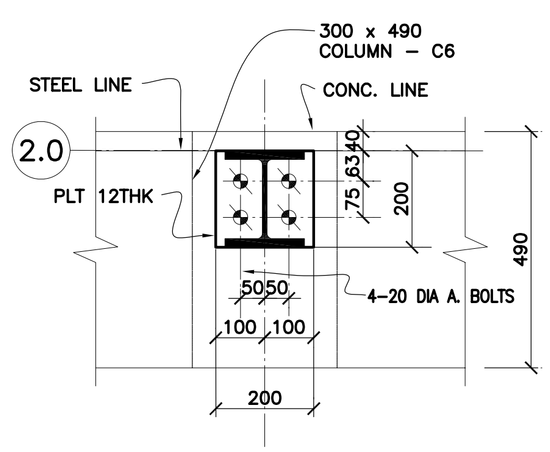

ANCHOR BOLT DETAIL (K)

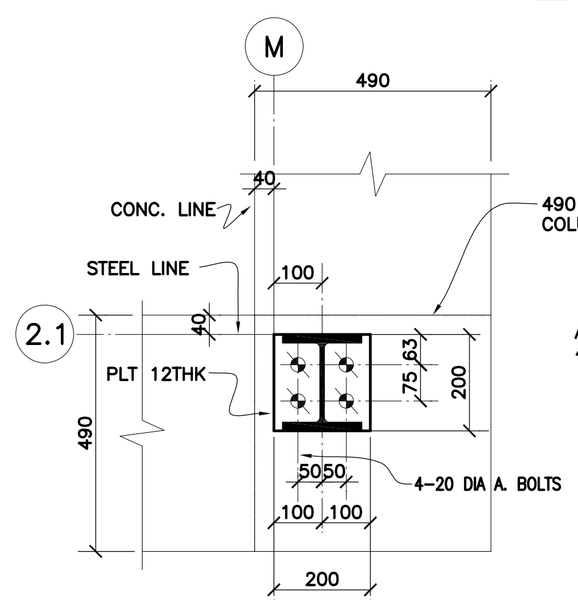

ANCHOR BOLT DETAIL (L)

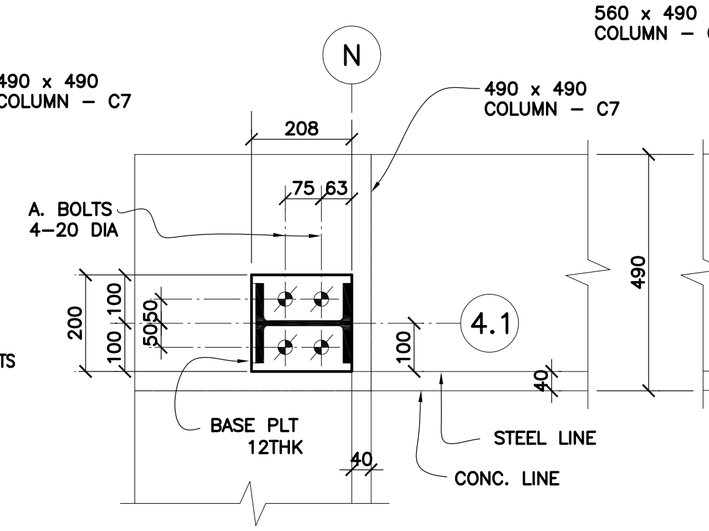

ANCHOR BOLT DETAIL (N)

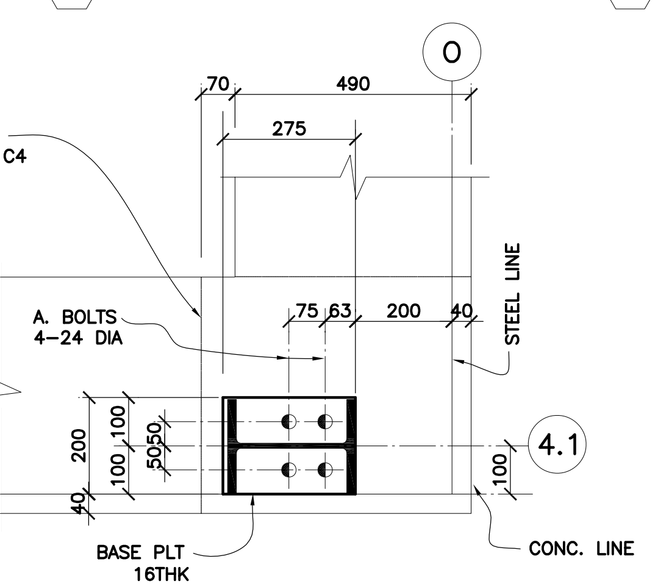

ANCHOR BOLT DETAIL (M)

GRAPHIC SCALE:
0 1m 2m 5m
SCALE: 1:100 (METRIC)
0 4ft 8ft 16ft
SCALE: .12":1' (ENGLISH)
SCALE FACTOR – 100

SEAL:

REV	DESCRIPTIONS	DATE	APPD.
	REVISION		

INTERNATIONAL BROADCASTING BUREAU
INTERNATIONAL BROADCASTING BUREAU
ENGINEERING & TECHNICAL OPERATIONS
WASHINGTON, D.C. 20547

Bader AlMulla & Bros. Co. W.L.L
Engineering Group

		DATE
DRAWN	HAK	23/05/04
CHK. BY.	JPB	DATE
ENGR.	JPB	DATE

APPROVALS
PROJ. MANAGER TC

SHORTWAVE EXPANSION PROJECT
TRANSMISSION BUILDING
COLUMN NECK & ANCHOR BOLT DETAILS
KUWAIT

IQC No. XX-XX-XX
TASK No. X
PROJ. No. 03NC080
CAD DESIGN FILE NAME: FILENAME

DWG. No. BMB-AS-C-S03 — S03
SCALE: AS SHOWN SHEET 1 OF SHT

• 50 Gatsel Drive, Wayne, NJ. 07470 • TEL : (973) 785-4545 • FAX : (973) 785-0786 • www.hansonengineers.com
HANSON Design Team Trained Since 1918
THALES BROADCAST & MULTIMEDIA
676 North Washington St., Alexandria, VA. 22314 • TEL : (703) 549-5244 • FAX : (703) 836-3264 • www.thales-bm.com •