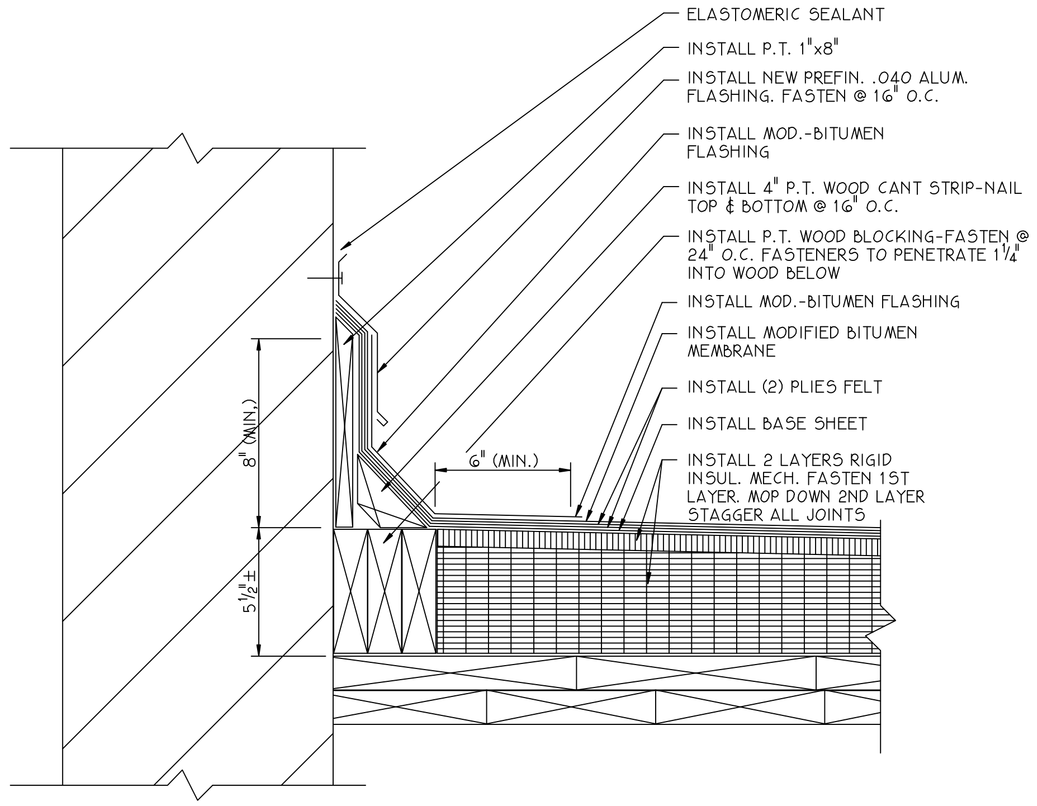

SECTION 6 / A5.2
SCALE: 3" = 1'-0"

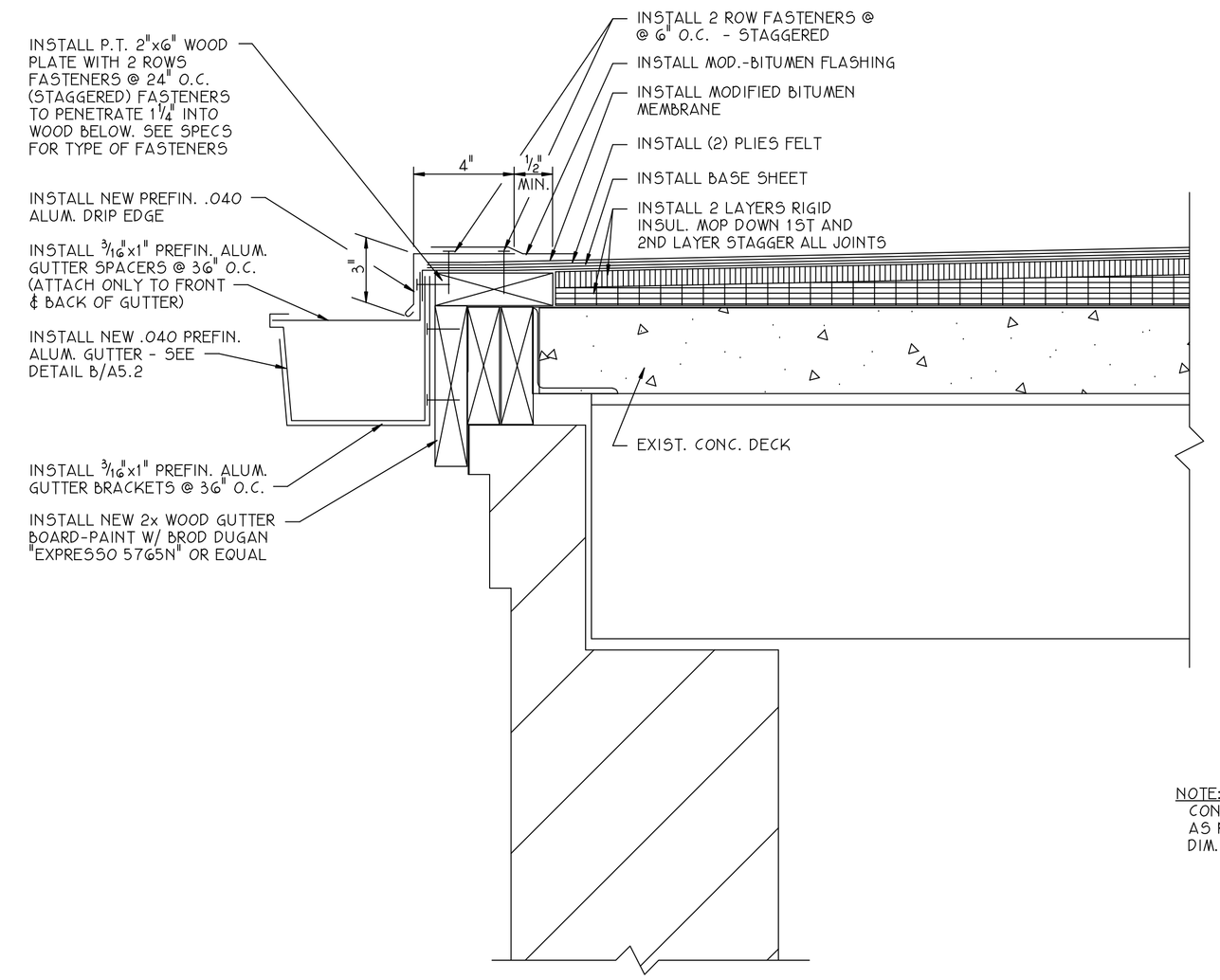

SECTION 7 / A5.2
SCALE: 3" = 1'-0"

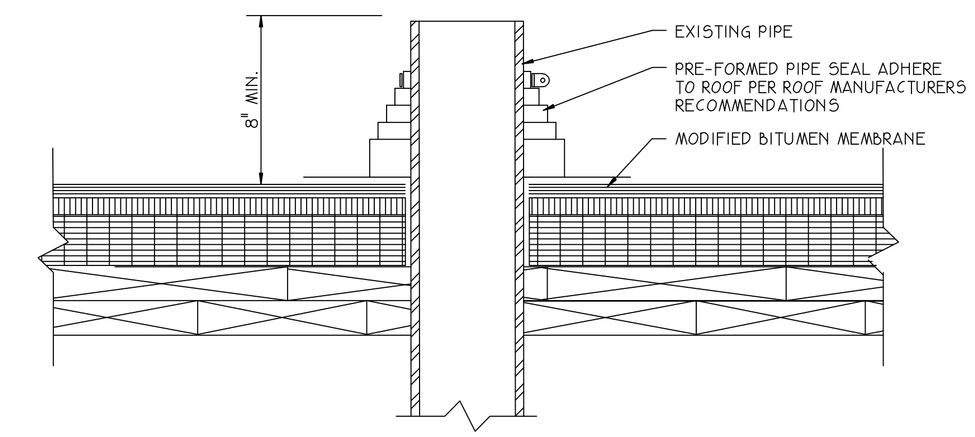

NOTE:
CONTRACTOR TO EXTEND EXIST. PIPE AS REQUIRED TO MEET THE 8" MIN. DIM. (TYP. FOR ALL ROOF PENETRATIONS)

DETAIL A / A5.2
SCALE: 3" = 1'-0"

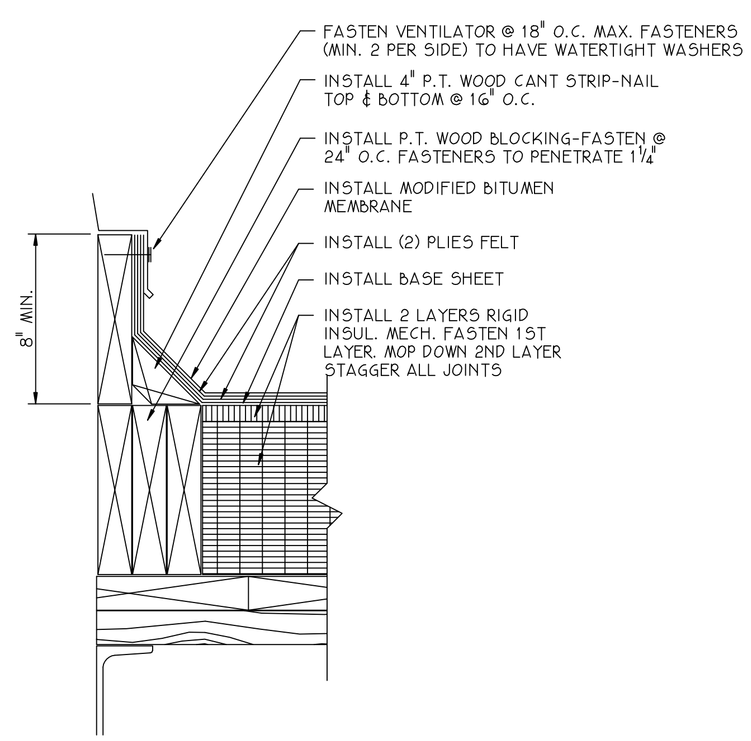

DETAIL C / A5.2
SCALE: 3" = 1'-0"

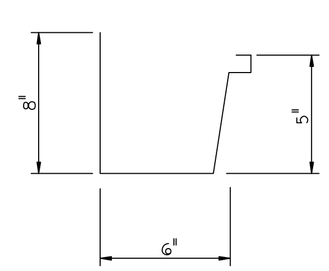

DETAIL D / A5.2
SCALE: 3" = 1'-0"

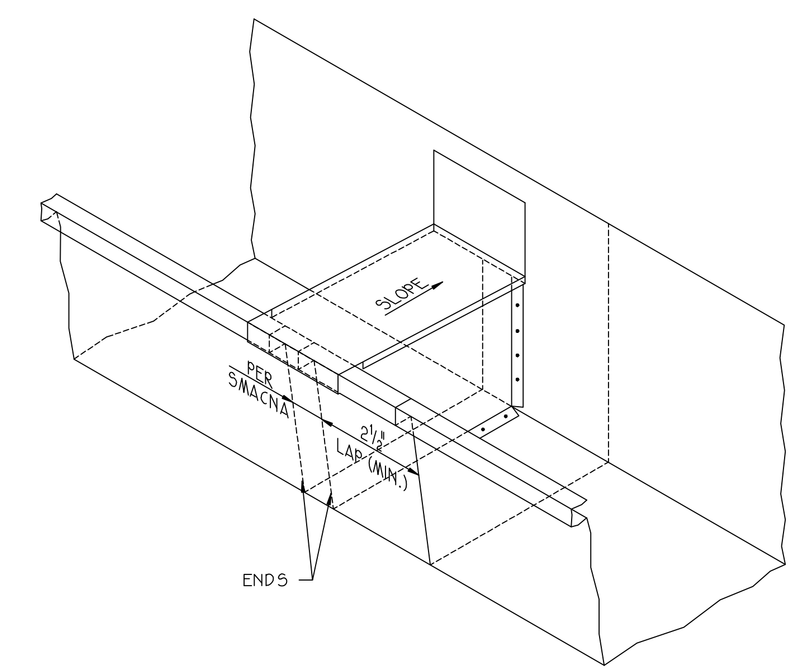

GUTTER EXPANSION JOINT / E / A5.2
NO SCALE

4" 2" 0 6" 1'
SCALE: 1" = 3"

STATE OF ILLINOIS
WILLIS R. CONNER
062-042493
REGISTERED PROFESSIONAL ENGINEER
INDIANAPOLIS, INDIANA

CERTIFIED BY

AMERICAN CONSULTING ENGINEERS INC.
4165 MILLERSVILLE ROAD
INDIANAPOLIS, INDIANA 46205

DESIGNED BY:	CHECKED BY:
RES	RES
DRAWN BY:	REVIEWED BY:
DSS	RES

COORDINATION
OFFICE DATE
FIRE CHIEF
SAFETY
BIO-ENVIRONMENTAL ENG
CORROSION ENG
USING AGENCY
CONSTRUCTION MANAGER
BASE COMMUNICATIONS

REV	DATE	DESCRIPTION	DRAWN	APPR'D

AIR MOBILITY COMMAND
SCOTT AIR FORCE BASE

ROOF REPAIR
BUILDING 433, ANNEXES

NEW SECTIONS & DETAILS

SUBMITTED: CHIEF ENGINEER
SUBMITTED: CIVIL ENGINEER
SUBMITTED: COMMANDER

DRAWN BY	DESIGNED BY	DATE	SHEET
		06/30/94	A5.2

SCALE	PROJECT NO.	DRAWING NO.	PAGE NO.
3"=1'-0"	5C91-1035	4989	13 OF 13

DWG FILE: D:\STRIP\433A_A52
PLOT SCALE: 1:4.000
PLOT ORIGIN: 0.00,0.00
SPELLCHK: 10/28/94
EDIT DATE: 11/10/94
EDITED BY: DSS - SRS