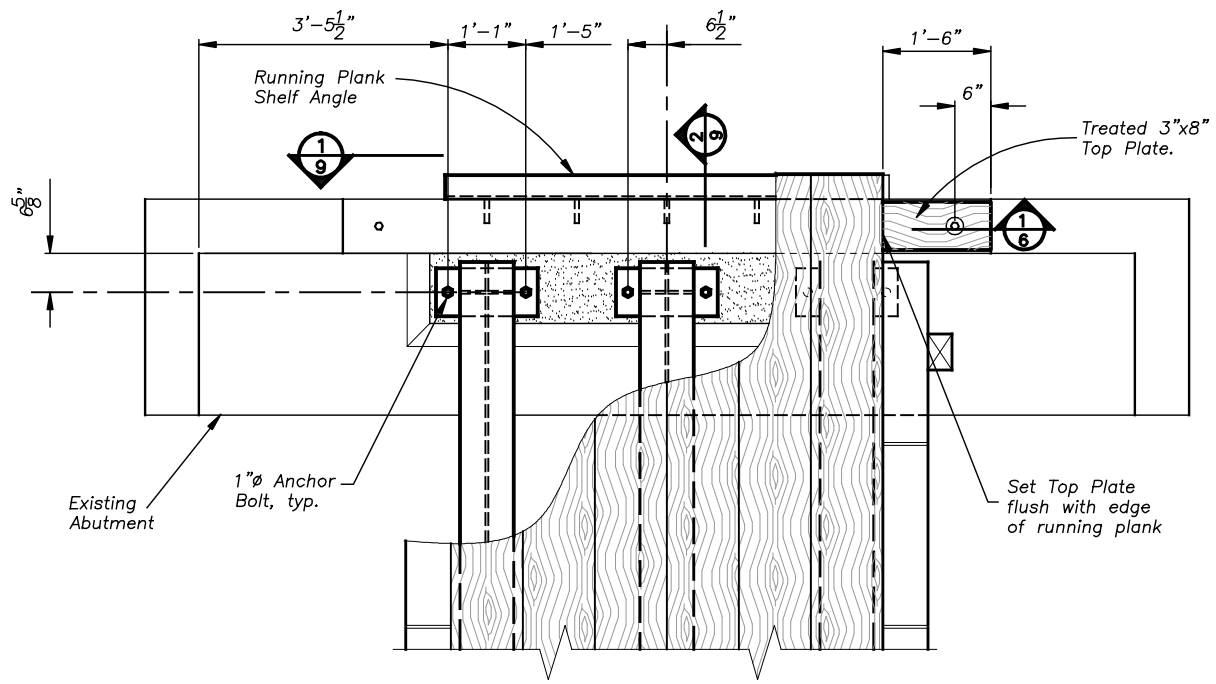

PLAN

Scale: 3/8" = 1'-0"

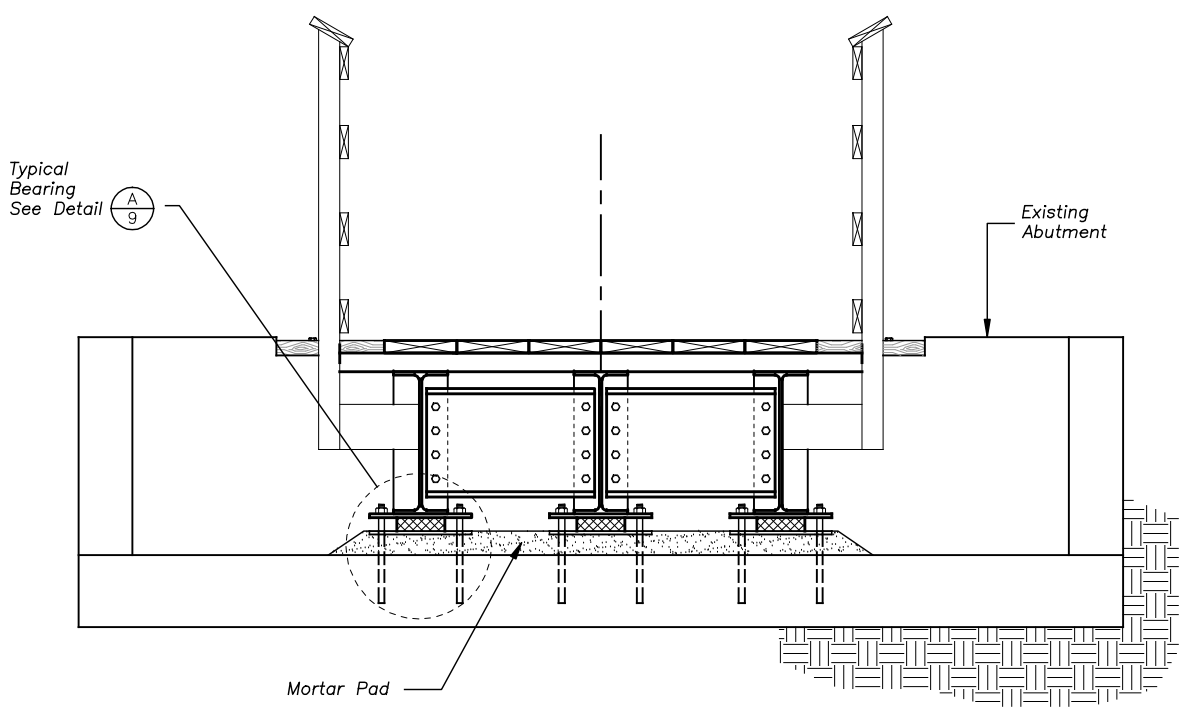

ELEVATION- NEW

Scale: 3/8" = 1'-0"

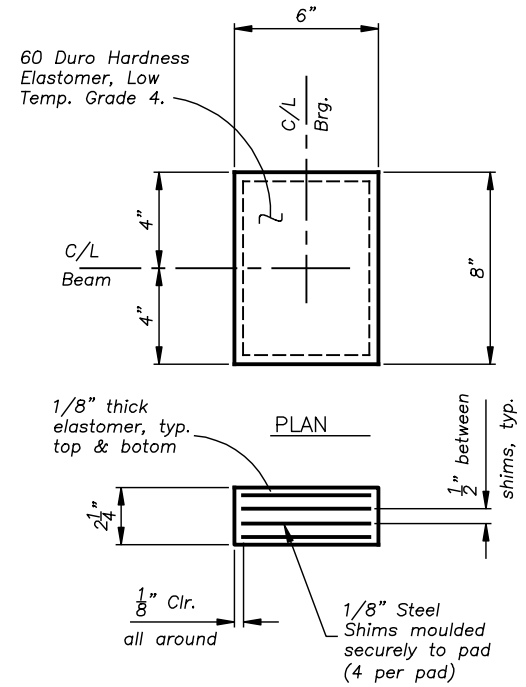

BEARING PAD DETAIL

Not to Scale

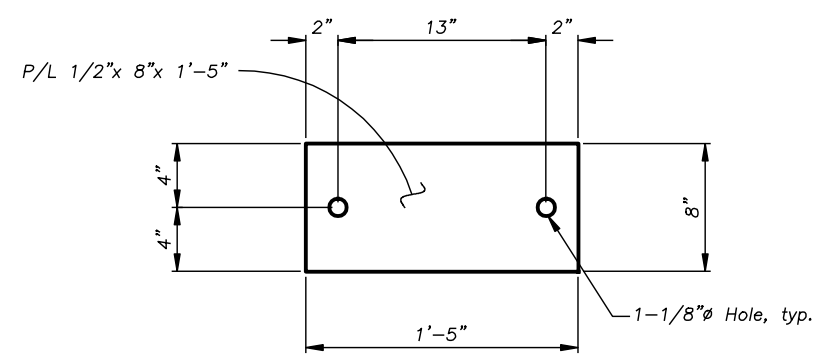

MASONRY PLATE DETAIL

Not to Scale

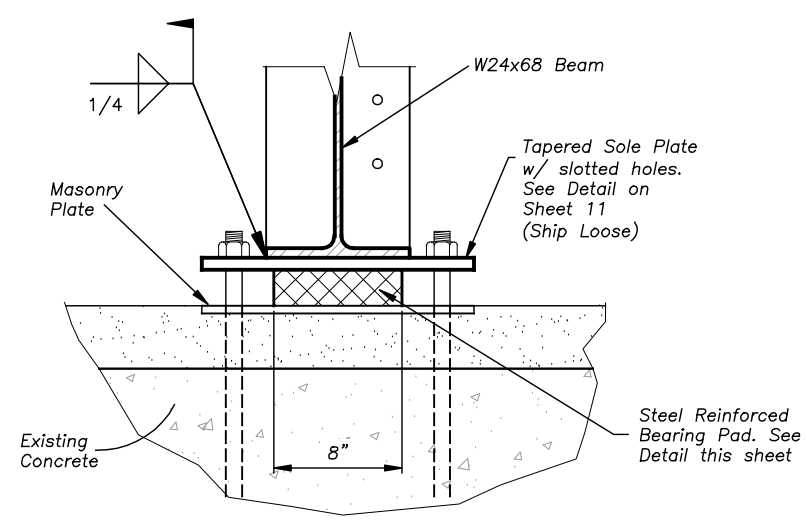

A/9 DETAIL

Not to Scale

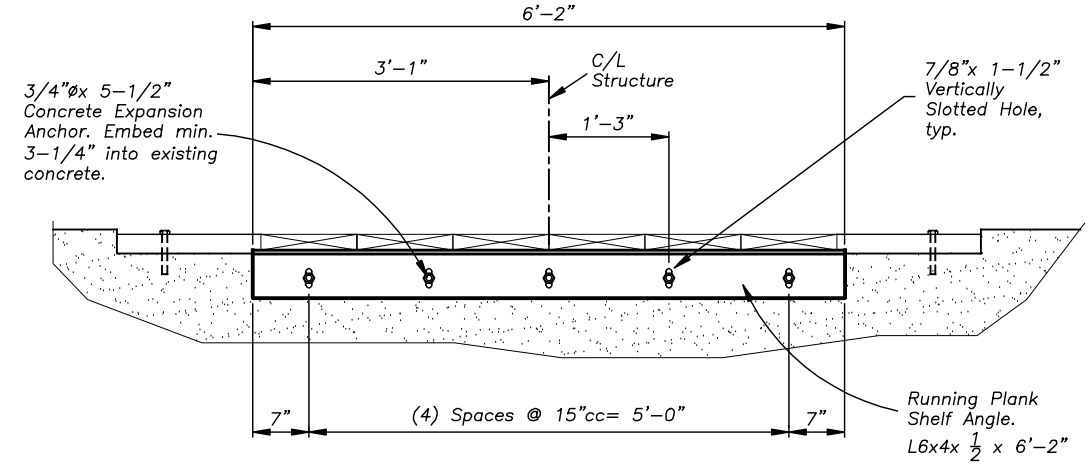

1/9 SECTION

Scale: 1/2" = 1'-0"

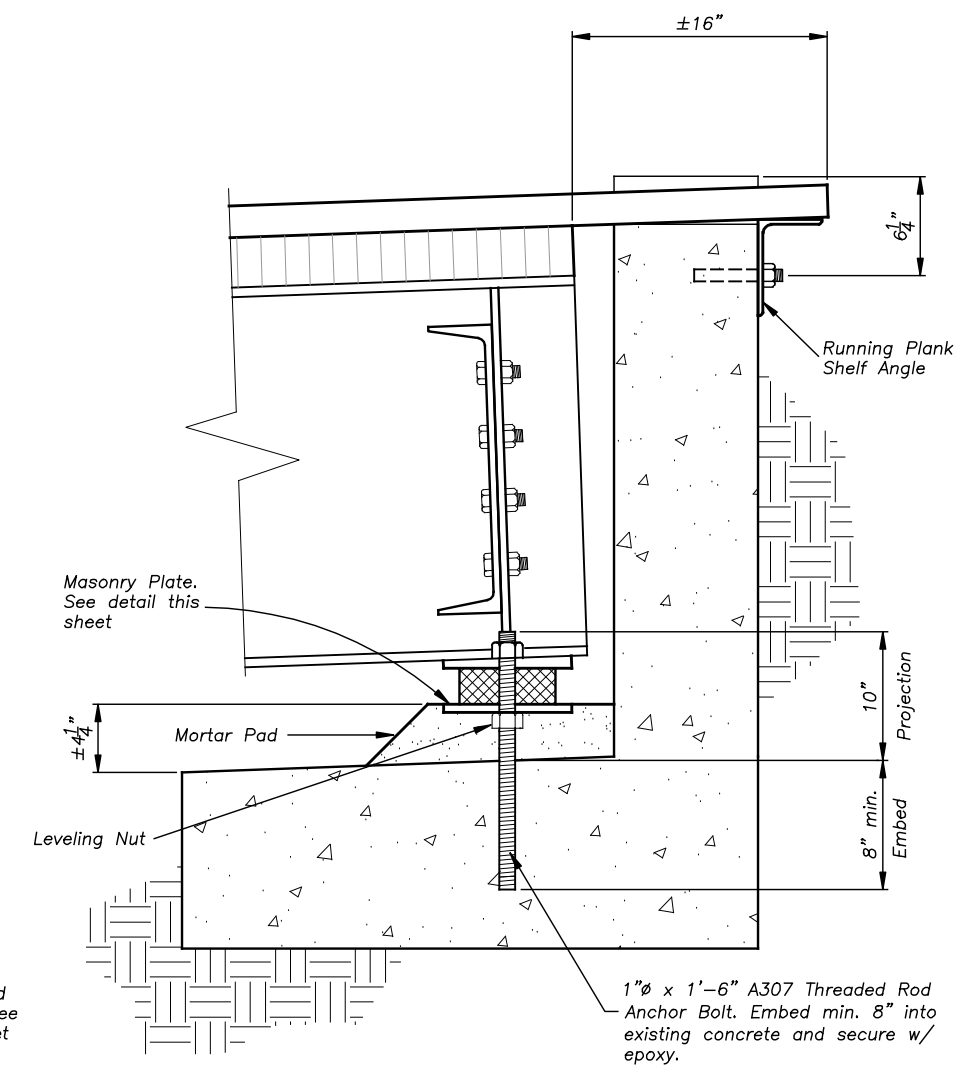

2/9 SECTION

Scale: 1" = 1'-0"

BY	DATE	REVISION DESCRIPTION

DESIGN	CT	PROJ. NO.	5282
DRAWN	CT	DATE	MAY 07
CHECKED	MJ	SURVEYED	DJ&A

DJ&A, P.C.
CONSULTING ENGINEERS & LAND SURVEYORS

USFS - CLEARWATER N.F.
COLT CREEK CABIN TRAIL
BRIDGE REPLACEMENT

ABUTMENT NO. 2 DETAILS

SHEET 9 OF 14