CULVERT WORK SUMMARY

Station	Existing Size & Type	Existing Length L.F.	Skew	New 18" CMP L.F.	New 15"x21" CMPA L.F.	New 20"x28" CMPA L.F.	New 24"x35" CMPA L.F.	Clean Culvert L.F.	Remove Culvert L.F.	Comments
300+08	15"x21" CMPA	44			48				44	Remove and replace
308+59					74					Approach LT, Install new culvert
313+60	20"x28" CMPA	39	20° RT			50			39	Remove and replace
315+89					48					Approach RT, Install new culvert
315+96					48					Approach LT, Install new culvert
324+74					48					Approach RT, Install new culvert
326+25			39° RT		64					Install new mainline relief culvert, Flow RT to LT
328+01	18" CMP	42	57° RT		54				42	Remove and replace
332+00			15° RT		46					Install new mainline relief culvert, Flow RT to LT
332+24	12" CMP	18							18	Approach RT, Remove culvert
342+53					44					Install new mainline relief culvert, Flow LT to RT
347+00					46					Install new mainline relief culvert, Flow LT to RT
348+74			63° LT		140					Install new culvert, Flow LT to RT
348+92	18" CMP	47							47	Remove
353+50					46					Install new mainline relief culvert, Flow LT to RT
358+00					44					Install new mainline relief culvert, Flow LT to RT
361+93	18" CMP	41	5° RT		46				41	Remove and replace
369+00					40					Install new mainline relief culvert, Flow LT to RT
373+28	24"x35" CMPA	31					40		31	Aproach LT, Remove and replace
377+00					44					Install new mainline relief culvert, Flow LT to RT
377+87	24" CMP	48	9° LT			56			48	Remove and replace
381+51	18" CMP	46	13° LT			50			46	Remove and replace
383+90	18" CMP	42	13° LT		52				42	Remove and replace
386+04	24"x35" CMPA	55	18° LT				52		55	Remove and replace
395+50					42					Install new mainline relief culvert, Flow LT to RT
406+20	15" CMP	43			52				43	Remove and replace
409+94	24" CMP	49	5° LT			64			49	Remove and replace
412+01	18" CMP	36	6° LT		46				36	Remove and replace
416+50					50					Approach LT, Install new culvert
421+53	18" CMP	49	13° RT		62				49	Remove and replace
427+10					40					Install new mainline relief culvert, Flow LT to RT
431+28	20"x28" CMPA	41	37° LT			54			41	Remove and replace
435+18	18" CMP	93	59° LT		122				93	Remove and replace
436+36	20"x28" CMPA	44	25° LT			50			44	Remove and replace
439+96					44					Install new mainline relief culvert, Flow LT to RT
448+13	15"x21" CMPA				48					Install new mainline relief culvert, Flow LT to RT
451+32	18" CMP	56	14° LT		68				56	Remove and replace
Total				**0**	**1506**	**324**	**92**	**0**	**864**	

METAL GUARDRAIL SUMMARY

STATION	W BEAM METAL GUARDRAIL FT	MODIFIED THRIE-BEAM METAL GUARDRAIL EACH	W BEAM FLARED ENERGY ABSORBING TERMINAL SECTION EACH	W BEAM ONE WAY DEPARTURE SECTION EACH	THRIE-BEAM TO W BEAM REDUCER SECTION
442+75 TO 443+25 RT			1		
443+25 TO 443+87.5 RT	62.5				
443+87.5 TO 444+00 RT					1
444+00 TO 446+00 RT		200			
446+00 TO 446+12.5 RT					1
446+12.5 TO 446+50 RT	37.5				
446+50 TO 446+62.5 RT				1	
TOTAL	**100**	**200**	**1**	**1**	**2**

SKEW DIAGRAM

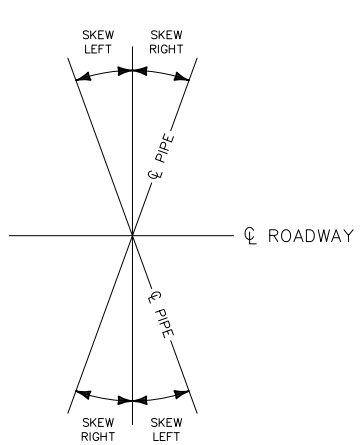

BASE BID

Item Number	Description	Method of Measure	Pay Unit	Estimated Quantity
15211	Construction Surveying and Staking, Method I Precision B	DQ	mi	2.9
15401	Contractor Testing	DQ	ls	1
15703	Silt Fence	AQ	ft	4655
20101	Clearing and Grubbing	DQ	ac	16.9
20301	Removal - Existing Signs	AQ	each	19
20301	Removal - Metal Pipe Gate	AQ	each	1
20401	Roadway Excavation, Compaction Method C, Construction Tolerance A	DQ	cy	18132
20402	Waste - Rock	AQ	cy	400
20502	Individual Blasting Type Controlled	AQ	each	15
25507	Mechanically Stabilized Earth Wall - Excavation	AQ	cy	305
25508	Mechanically Stabilized Earth Wall - Select Backfill	AQ	cy	1363
25508	Mechanically Stabilized Earth Wall - Backfill for Construction Access	AQ	cy	125
25509	Mechanically Stabilized Earth Wall - Gabion Basket Placement	AQ	sf	2400
30103	Aggregate Base, grading E	DQ	cy	15215
30111	Aggregate Surface Course	DQ	cy	126
40301	Hot Asphalt Concrete Pavement Class B, Gradation B	AQ	ton	7758
41101	Prime Coat-Grade MC-70	AQ	ton	118
41304	Asphalt Pavement Milling, 100 ft taper to 3 in depth at	DQ	ls	1
55705	Bridge Repair	DQ	ls	1
60201-18	18 in. Corrugated Metal Pipe Culvert	AQ	lf	57
60202-15	21 in span, 15 in rise Pipe Arch Culvert	AQ	lf	1196
60202-20	28 in span, 20 in rise Pipe Arch Culvert	AQ	lf	235
60202-24	35 in span, 24 in rise Pipe Arch Culvert	AQ	lf	92
60701	Removing Culvert	AQ	lf	540
60707	Cleaning Culverts in Place	AQ	lf	41
61701	Guardrail system G4, type IV, class A	AQ	lf	100
61702	Flared Terminal Section - ET Plus	AQ	each	1
61702	Terminal Section - W Beam One Way Departure	AQ	each	1
61702	USFS Standard W Beam Bridge Approach Section	AQ	each	4
61708	Modified Thrie-Beam Metal Guardrail	AQ	lf	200
61709	Thrie-Beam to W Beam Reducer Section	AQ	each	2
61902	Gate, Metal Pipe	AQ	each	1
62504	Seeding,Hydraulic Method	DQ	su	68
62509	Mulching, Hydraulic Method	DQ	su	68
63301	Furnishing and Installing Signs	AQ	each	22
63308	Removing and Resetting Signs	AQ	each	2
63404	Pavement Markings Type 4	DQ	mi	11.52
63501	Temporary Traffic Control	LSQ	ls	1

Designated Method of Measurement:
DQ - Designed Quantity; AQ - Actual Quantity; LSQ - Lump Sum Quantity
lf - linear foot; cy - cubic yard; sf - square foot; ac - acre; ls - lump sum; su - slurry unit
gal - gallon; mi - mile

ADDITIVE/DEDUCTIVE ITEM #1 (SEAL AND COVER)

Item Number	Description	Method of Measure	Pay Unit	Estimated Quantity
40901	Surface Treatment Aggregates, Designation 1C	AQ	ton	505
40904	Emulsified Asphalt, Grade CRS-2	AQ	ton	43

ADDITIVE/DEDUCTIVE ITEM #2 (PHASE III PAVING)

Item Number	Description	Method of Measure	Pay Unit	Estimated Quantity
40301	Hot Asphalt Concrete Pavement Class B, Gradation B	AQ	ton	100

ADDITIVE/DEDUCTIVE ITEM #3 (SEAL AND COVER FOR PHASE III PAVING)

Item Number	Description	Method of Measure	Pay Unit	Estimated Quantity
40901	Surface Treatment Aggregates, Designation 1C	AQ	ton	7
40904	Emulsified Asphalt, Grade CRS-2	AQ	ton	0.6

AG-0355-S-09-0004

No.	Revision	By	Date
1	50% SUBMITTAL	WBL	6/23/06
2	95% SUBMITTAL	WBL	8/31/06
3	CONST. PLANS	WBL	11/10/06

WARNING 0 1 2 IF THIS BAR DOES NOT MEASURE 1" THEN DRAWING IS NOT TO SCALE

U.S.D.A. FOREST SERVICE – REGION 1
BEARTOOTH RANGER DISTRICT – CUSTER NATIONAL FOREST
RECONSTRUCTION OF WEST FORK ROCK CREEK ROAD #2071
PHASE IV
QUANTITY SCHEDULES

GREAT WEST ENGINEERING
2030 11th AVENUE
HELENA, MT 59601
(406) 449-8627, FAX (406) 449-8631

Sheet No.
D–1

F:\1-06148-USFS W FORK ROCK CREEK\CADD-06148\M551104\SHEETS\DET-SHEETS.dwg 2/2/2007 10:02:00 AM MST

AG-0355-S-09-0004

No.	Revision	By	Date
1	50% SUBMITTAL	WBL	6/23/06
2	95% SUBMITTAL	WBL	8/31/06
3	CONST. PLANS	WBL	11/10/06

WARNING
0 1 2
IF THIS BAR DOES NOT MEASURE 1" THEN DRAWING IS NOT TO SCALE

U.S.D.A. FOREST SERVICE – REGION 1
BEARTOOTH RANGER DISTRICT – CUSTER NATIONAL FOREST
RECONSTRUCTION OF WEST FORK ROCK CREEK ROAD #2071
PHASE IV
MASS-HAUL DIAGRAM

GREAT WEST ENGINEERING
2030 11th AVENUE
HELENA, MT 59601
(406) 449-8627, FAX (406) 449-8631

GreatWest engineering

Sheet No.
D–2

F:\1-06148-USFS W FORK ROCK CREEK\CADD-06148\W55110A\SHEETS\west_balance.dwg 1/9/2007 11:39:11 AM MST

NOTE: QUANTITIES REFLECT A 25% SHRINK FACTOR.

STATION	AREAS Square Feet CUT	AREAS Square Feet FILL	VOLUMES Cubic Yards CUT	VOLUMES Cubic Yards FILL	CUMULATIVE VOLUMES Cubic Yards CUT	CUMULATIVE VOLUMES Cubic Yards FILL
300+00	1.83	56.33	0.40	20.25	0.40	20.25
300+08	0.86	53.05	2.82	101.84	3.22	122.09
300+50	2.77	51.70	11.08	104.29	14.30	226.38
301+00	9.20	38.41	35.34	62.57	49.63	288.95
301+50	28.97	15.65	60.39	20.46	110.02	309.42
301+95.18	43.21	3.91	7.98	0.82	118.00	310.24
302+00	45.33	3.41	76.67	7.52	194.67	317.76
302+50	36.83	3.03	46.93	10.12	241.60	327.89
303+00	13.55	5.68	31.74	10.21	273.35	338.09
303+50	20.57	3.11	51.63	3.99	324.98	342.08
304+00	34.96	0.31	64.01	1.67	388.99	343.75
304+50	33.92	1.12	37.90	13.83	426.89	357.58
305+00	6.74	10.74	7.25	35.15	434.15	392.73
305+50	1.06	19.51	2.08	45.15	436.22	437.88
306+00	1.20	19.39	11.12	37.13	447.34	475.01
306+50	10.91	12.51	39.88	21.25	487.23	496.26
307+00	32.06	5.68	7.65	1.60	494.88	497.86
307+06.55	30.79	4.77	32.41	5.65	527.29	503.51
307+50	9.49	0.85	29.83	0.98	557.13	504.49
308+00	22.72	0.00	49.07	0.00	606.19	504.49
308+50	30.27	0.00	45.53	0.24	651.73	504.73
309+00	18.91	0.21	29.42	3.66	681.14	508.39
309+50	12.86	2.95	13.50	14.56	694.64	522.95
310+00	1.72	9.63	2.69	23.01	697.33	545.96
310+50	1.19	10.25	1.10	27.76	698.43	573.72
311+00	0.00	13.73	2.84	35.09	701.27	608.81
311+50	3.06	16.59	0.91	8.12	702.17	616.93
311+60.36	1.67	17.27	3.40	29.39	705.58	646.32
312+00	2.93	14.66	6.16	35.29	711.74	681.60
312+50	3.73	15.74	8.39	45.16	720.14	726.76
313+00	5.38	23.20	10.28	51.28	730.42	778.04
313+50	5.75	21.13	2.12	10.60	732.53	788.64
313+60	5.69	24.66	9.25	39.86	741.78	828.50
314+00	6.80	18.56	13.21	39.90	754.99	868.41
314+50	7.47	16.22	16.38	32.41	771.37	900.82
315+00	10.24	11.93	16.60	27.15	787.97	927.97
315+50	7.74	11.55	5.80	11.37	793.77	939.34
315+72.44	6.28	10.33	6.60	10.64	800.37	949.99
316+00	6.65	6.35	25.21	10.91	825.59	960.89
316+49.12	21.07	3.24	0.69	0.14	826.27	961.03
316+50	20.96	3.38	40.08	7.52	866.36	968.55
317+00	22.35	3.11	40.95	7.84	907.31	976.39
317+50	21.88	3.65	45.84	7.55	953.14	983.95
318+00	27.62	2.86	47.42	7.67	1000.57	991.62
318+50	23.55	3.75	17.26	4.44	1017.83	996.06
318+72.23	18.33	4.86	16.85	6.60	1034.68	1002.66
319+00	14.43	5.40	26.40	10.33	1061.08	1012.99
319+50	14.08	3.53	28.21	5.74	1089.29	1018.73
320+00	16.38	1.43	29.41	4.41	1118.71	1023.14
320+50	15.38	2.38	26.35	8.19	1145.06	1031.33
321+00	13.07	4.70	21.67	12.99	1166.73	1044.32
321+50	10.34	6.53	22.02	16.08	1188.76	1060.41
322+00	13.45	7.37	23.78	10.32	1212.53	1070.73
322+50	12.23	1.55	25.47	5.14	1238.00	1075.87
323+00	15.27	2.89	30.29	8.38	1268.29	1084.25
323+50	17.44	4.35	25.15	11.25	1293.44	1095.50
324+00	9.72	5.38	13.24	14.15	1306.68	1109.65
324+50	4.58	6.85	11.61	18.58	1318.29	1128.23
325+00	7.96	9.20	7.74	31.91	1326.03	1160.14
325+50	0.40	18.37	0.37	52.12	1326.40	1212.26
326+00	0.00	26.66	0.00	33.40	1326.40	1245.65
326+25	0.00	31.05	0.00	35.46	1326.40	1281.11
326+50	0.00	30.22	0.80	55.74	1327.20	1336.85
327+00	0.86	17.94	7.73	43.47	1334.93	1380.33
327+50	7.48	19.62	29.31	33.41	1364.24	1413.74
328+00	24.18	9.25	51.20	17.87	1415.44	1431.61
328+50	31.12	6.18	27.06	7.68	1442.51	1439.29
328+74.71	28.02	7.25	26.75	20.16	1469.25	1459.45
329+00	29.33	26.86	52.87	139.88	1522.12	1599.34
329+50	28.05	92.58	49.95	114.62	1572.07	1713.96
330+00	26.19	5.57	51.26	11.09	1623.33	1725.06
330+50	29.43	3.96	49.44	15.21	1672.77	1740.27
331+00	24.26	9.10	45.40	22.02	1718.18	1762.29
331+50	25.15	9.80	35.43	27.91	1753.61	1790.20
332+00	13.41	14.16	15.77	21.03	1769.38	1811.23
332+28.64	16.54	17.35	11.10	13.56	1780.47	1824.79

STATION	AREAS Square Feet CUT	AREAS Square Feet FILL	VOLUMES Cubic Yards CUT	VOLUMES Cubic Yards FILL	CUMULATIVE VOLUMES Cubic Yards CUT	CUMULATIVE VOLUMES Cubic Yards FILL
332+50	11.51	10.08	35.01	11.92	1815.48	1836.72
333+00	26.30	0.22	34.10	101.32	1849.58	1938.03
333+30.50	34.08	143.28	0.27	1.39	1849.85	1939.42
333+30.92	0.00	0.00	0.00	0.00	1849.85	1939.42
333+50	0.00	0.00	0.00	0.00	1849.85	1939.42
333+65.52	0.00	0.00	0.30	1.40	1850.15	1940.83
333+66	33.99	126.15	53.51	99.29	1903.66	2040.11
334+00	50.99	0.00	98.11	0.00	2001.77	2040.11
334+50	54.97	0.00	94.61	0.00	2096.38	2040.11
335+00	47.21	0.00	75.53	0.27	2171.91	2040.39
335+50	34.36	0.24	49.94	1.86	2221.84	2042.25
336+00	19.57	1.37	28.26	5.20	2250.10	2047.46
336+50	10.95	3.12	14.62	12.66	2264.72	2060.12
337+00	4.84	7.82	6.06	34.94	2270.78	2095.06
337+50	1.71	22.37	1.77	69.61	2272.56	2164.67
338+00	0.20	37.77	0.13	29.14	2272.69	2193.82
338+16.24	0.23	39.74	0.40	62.50	2273.09	2256.32
338+50	0.41	40.15	1.28	94.55	2274.36	2350.87
339+00	0.98	41.44	4.28	84.14	2278.64	2435.01
339+50	3.68	31.11	8.85	64.86	2287.50	2499.87
340+00	5.95	24.79	12.10	51.09	2299.59	2550.96
340+50	7.20	19.25	13.01	38.04	2312.60	2588.99
341+00	6.92	13.52	17.31	27.29	2329.91	2616.29
341+50	11.85	9.97	22.48	22.02	2352.39	2638.31
342+00	12.51	8.98	25.86	16.04	2378.25	2654.35
342+50	15.45	4.82	1.65	0.66	2379.89	2655.01
342+53.01	14.13	4.62	20.23	35.57	2400.12	2690.58
343+00	9.11	28.07	11.33	73.11	2411.46	2763.69
343+50	3.13	35.10	13.49	57.62	2424.94	2821.31
344+00	11.44	14.69	28.06	21.59	2453.01	2842.90
344+50	18.87	3.97	54.60	7.84	2507.61	2850.75
345+00	40.10	2.81	42.90	3.06	2550.51	2853.81
345+27.40	44.45	2.02	38.52	2.11	2589.03	2855.92
345+50	47.75	1.99	94.20	3.40	2683.23	2859.32
346+00	54.19	0.93	88.88	2.06	2772.11	2861.39
346+50	42.14	0.84	73.49	1.18	2845.60	2862.56
347+00	37.57	0.17	44.38	37.79	2889.98	2900.36
347+50	10.30	32.61	11.06	80.64	2901.05	2980.99
348+00	1.57	37.39	2.44	94.45	2903.49	3075.44
348+50	1.05	44.56	0.88	48.30	2904.36	3123.75
348+74	0.91	42.72	0.42	31.09	2904.78	3154.84
348+92	0.33	32.14	1.09	9.53	2905.87	3164.36
349+00	6.99	19.44	49.37	26.96	2955.24	3191.33
349+50	46.63	3.87	142.90	8.54	3098.13	3199.86
350+00	108.67	3.50	248.93	6.06	3347.06	3205.93
350+50	162.10	1.74	254.00	4.06	3601.06	3209.99
351+00	114.19	1.77	32.94	0.66	3633.99	3210.65
351+07.98	110.18	1.80	107.70	7.90	3741.69	3218.55
351+50	27.17	6.27	32.91	21.37	3774.60	3239.92
352+00	8.26	12.06	10.99	32.81	3785.58	3272.73
352+50	3.50	16.15	5.46	52.63	3791.04	3325.36
353+00	2.31	29.21	3.21	52.61	3794.25	3377.97
353+39.53	2.01	28.18	0.75	13.45	3795.00	3391.41
353+50	1.87	27.28	5.01	52.87	3800.01	3444.28
354+00	3.54	18.40	4.56	48.29	3804.57	3492.57
354+50	1.38	23.32	3.75	31.24	3808.32	3523.81
355+00	2.67	3.67	5.03	14.22	3813.36	3538.03
355+50	2.76	8.62	5.32	24.40	3818.67	3562.43
356+00	2.98	12.47	0.58	3.03	3819.25	3565.46
356+05.20	3.07	12.72	7.01	23.49	3826.27	3588.95
356+50	5.51	9.85	14.76	17.01	3841.03	3605.96
357+00	10.63	4.80	21.57	14.61	3862.60	3620.57
357+50	12.93	7.73	28.68	20.22	3891.28	3640.79
358+00	18.36	9.51	35.52	23.29	3926.80	3664.08
358+50	20.34	10.32	36.56	23.72	3963.37	3687.80
359+00	19.55	9.89	24.41	28.39	3987.77	3716.19
359+50	7.08	14.35	7.78	43.13	3995.56	3759.32
360+00	1.43	22.55	1.41	53.92	3996.97	3813.25
360+50	0.12	23.68	0.11	51.36	3997.07	3864.60
361+00	0.00	20.45	0.00	50.48	3997.07	3915.08
361+50	0.00	22.94	0.00	34.83	3997.07	3949.91
361+82.43	0.00	23.22	0.00	12.10	3997.07	3962.01
361+93	0.00	26.23	0.22	6.73	3997.30	3968.74
362+00	1.70	15.31	12.27	31.26	4009.57	4000.00
362+50	11.55	11.70	17.94	24.50	4027.50	4024.50

STATION	AREAS Square Feet CUT	AREAS Square Feet FILL	VOLUMES Cubic Yards CUT	VOLUMES Cubic Yards FILL	CUMULATIVE VOLUMES Cubic Yards CUT	CUMULATIVE VOLUMES Cubic Yards FILL
363+00	7.82	9.47	15.50	17.16	4043.00	4041.66
363+50	8.92	5.35	23.96	7.22	4066.96	4048.88
364+00	16.96	0.88	39.80	1.44	4106.76	4050.32
364+50	26.03	0.37	46.10	1.47	4152.86	4051.79
365+00	23.76	0.90	41.58	4.28	4194.43	4056.07
365+43.93	27.35	3.31	6.06	0.89	4200.49	4056.96
365+50	27.18	2.93	56.26	10.65	4256.76	4067.61
366+00	34.22	6.18	62.97	17.70	4319.72	4085.31
366+50	34.22	8.98	55.22	17.72	4374.95	4103.03
367+00	25.56	6.21	44.97	12.89	4419.92	4115.92
367+50	23.02	4.85	41.26	15.59	4461.18	4131.51
368+00	21.65	8.52	41.85	24.51	4503.02	4156.02
368+50	23.90	12.47	36.88	27.11	4539.90	4183.13
369+00	16.37	10.72	22.57	20.45	4562.47	4203.58
369+50	8.29	6.77	15.35	17.39	4577.82	4220.97
370+00	8.52	8.09	14.80	19.17	4592.62	4240.14
370+46.17	9.04	9.63	1.29	1.71	4593.91	4241.85
370+50	9.13	9.68	18.88	16.86	4612.79	4258.71
371+00	11.26	4.89	16.11	12.98	4628.90	4271.69
371+50	6.14	6.33	8.35	16.21	4637.26	4287.91
371+96.99	3.46	8.58	0.41	1.21	4637.67	4289.12
372+00	4.01	8.69	10.08	21.48	4647.75	4310.60
372+50	6.88	9.70	16.92	18.68	4664.67	4329.28
373+00	11.18	6.31	23.97	9.90	4688.65	4339.18
373+50	14.49	2.16	30.92	2.51	4719.57	4341.69
374+00	18.70	0.00	29.80	0.00	4749.36	4341.69
374+50	13.25	0.00	15.21	8.48	4764.57	4350.18
375+00	3.19	7.29	6.70	29.05	4771.27	4379.23
375+50	4.16	17.54	13.11	44.09	4784.38	4423.31
376+00	10.28	20.05	2.04	4.77	4786.42	4428.09
376+05.17	11.43	19.18	19.22	39.73	4805.64	4467.82
376+50	11.72	19.11	24.04	40.36	4829.68	4508.17
377+00	14.24	15.76	14.67	43.55	4844.35	4551.73
377+50	1.60	21.87	1.10	59.37	4845.44	4611.10
377+87	0.00	47.45	1.36	30.16	4846.80	4641.26
378+00	5.64	52.78	2.53	18.87	4849.33	4660.12
378+09.84	8.27	30.08	13.49	47.59	4862.83	4707.71
378+50	9.96	21.04	14.39	83.47	4877.22	4791.18
379+00	5.66	50.96	6.68	126.26	4883.90	4917.44
379+50	1.59	57.98	1.47	122.58	4885.37	5040.02
380+00	0.00	47.89	0.00	108.20	4885.37	5148.22
380+50	0.00	45.61	0.00	87.75	4885.37	5235.97
381+00	0.00	30.22	0.00	80.49	4885.37	5316.46
381+50	0.00	39.35	51.03	75.11	4936.40	5391.57
382+00	55.27	25.53	116.94	61.59	5053.33	5453.16
382+50	71.74	27.63	38.74	24.35	5092.07	5477.51
382+67.62	47.65	32.04	29.52	57.40	5121.59	5534.91
383+00	1.58	44.53	1.46	126.28	5123.06	5661.19
383+50	0.00	64.58	0.00	124.59	5123.06	5785.78
383+90	0.00	69.98	0.00	31.13	5123.06	5816.92
384+00	0.00	64.53	0.00	130.76	5123.06	5947.68
384+50	0.00	48.45	0.00	98.95	5123.06	6046.62
385+00	0.00	37.04	19.70	62.56	5142.75	6109.18
385+50	21.27	17.01	25.58	39.31	5168.33	6148.49
386+00	6.35	16.95	290.64	31.20	5458.97	6179.68
386+50	307.54	10.00	597.29	16.90	6056.26	6196.59
387+00	337.54	4.60	587.65	30.68	6643.91	6227.27
387+50	297.12	21.91	331.17	39.77	6975.09	6267.04
387+86.31	195.37	25.41	84.00	16.37	7059.09	6283.41
388+00	144.50	25.78	177.91	51.03	7237.00	6334.44
388+50	52.11	18.07	70.89	37.17	7307.89	6371.61
389+00	26.02	13.84	12.39	7.41	7320.28	6379.02
389+13.83	23.28	9.05	27.38	9.52	7347.66	6388.54
389+50	17.60	2.32	37.23	3.53	7384.89	6392.07
390+00	22.61	0.73	46.60	2.84	7431.49	6394.91
390+50	27.71	1.73	48.19	10.16	7479.67	6405.07
391+00	24.33	7.05	34.27	20.43	7513.94	6425.50
391+50	12.68	10.60	21.58	28.82	7535.52	6454.32
392+00	10.62	14.30	18.08	37.57	7553.60	6491.89
392+50	8.90	18.16	18.93	42.50	7572.53	6534.39
393+00	11.54	18.56	19.30	46.24	7591.83	6580.63
393+50	9.30	21.40	13.75	54.93	7605.58	6635.56
394+00	5.55	26.06	10.53	62.67	7616.11	6698.23
394+50	5.83	28.09	6.77	34.07	7622.88	6732.30
394+76	8.23	28.51	8.16	31.92	7631.04	6764.21

AG-0355-S-09-0004

No.	Revision	By	Date
1	50% SUBMITTAL	WBL	6/23/06
2	95% SUBMITTAL	WBL	8/31/06
3	CONST. PLANS	WBL	11/10/06

WARNING
0 ½ 1
IF THIS BAR DOES NOT MEASURE 1" THEN DRAWING IS NOT TO SCALE

U.S.D.A. FOREST SERVICE – REGION 1
BEARTOOTH RANGER DISTRICT – CUSTER NATIONAL FOREST
RECONSTRUCTION OF WEST FORK ROCK CREEK ROAD #2071
PHASE IV
EARTHWORK QUANTITY TABLES

GREAT WEST ENGINEERING
2030 11th. AVENUE
HELENA, MT 59601
(406) 449-8627, FAX (406) 449-8631

Sheet No.
D–3

STATION	AREAS Square Feet		VOLUMES Cubic Yards		CUMULATIVE VOLUMES Cubic Yards	
	CUT	FILL	CUT	FILL	CUT	FILL
395+00	9.99	28.82	13.67	70.69	7644.70	6834.91
395+50	4.64	32.09	6.37	77.99	7651.07	6912.90
396+00	2.24	35.07	5.98	79.30	7657.05	6992.19
396+50	4.27	33.23	14.14	72.40	7671.19	7064.59
397+00	11.06	29.18	23.59	58.67	7694.78	7123.26
397+50	14.41	21.41	23.46	48.16	7718.23	7171.43
398+00	10.83	20.13	19.13	44.24	7737.36	7215.67
398+50	9.71	18.01	14.91	43.68	7752.27	7259.34
399+00	6.30	19.62	19.19	39.79	7771.46	7299.13
399+50	14.29	14.65	37.31	28.27	7808.77	7327.40
400+00	25.66	9.69	62.15	16.80	7870.92	7344.19
400+37.75	62.35	9.48	33.69	5.53	7904.61	7349.72
400+50	86.22	10.03	151.73	27.77	8056.34	7377.49
401+00	77.65	13.96	85.75	38.67	8142.09	7416.16
401+50	14.96	19.45	24.85	40.85	8166.94	7457.02
402+00	11.89	15.85	18.54	32.78	8185.48	7489.80
402+50	8.14	12.48	13.37	22.02	8198.85	7511.82
402+87.72	11.01	12.74	5.24	6.94	8204.10	7518.76
403+00	11.85	11.61	28.55	23.47	8232.65	7542.23
403+50	18.70	8.61	283.42	18.67	8516.07	7560.90
404+00	282.99	7.47	596.30	17.45	9112.37	7578.35
404+50	347.78	7.55	564.03	21.06	9676.41	7599.41
405+00	248.39	10.60	232.73	32.42	9909.14	7631.82
405+50	0.89	17.41	0.82	67.02	9909.96	7698.84
406+00	0.00	40.69	0.00	42.38	9909.96	7741.21
406+20	0.00	51.41	0.00	63.36	9909.96	7804.57
406+50	0.00	40.44	1.57	98.85	9911.53	7903.42
407+00	1.69	45.58	5.26	103.79	9916.79	8007.21
407+50	3.94	44.82	0.22	3.05	9917.01	8010.26
407+51.50	4.00	43.78	10.54	72.54	9927.56	8082.81
408+00	7.74	20.84	14.93	33.57	9942.49	8116.37
408+50	8.38	8.16	22.26	26.85	9964.75	8143.23
409+00	15.66	15.04	97.64	46.61	10062.39	8189.84
409+50	89.80	25.23	83.88	109.87	10146.27	8299.71
409+94	13.15	82.64	2.89	23.09	10149.16	8322.80
410+00	12.86	83.62	38.22	102.17	10187.38	8424.97
410+50	28.42	4.66	9.48	1.98	10196.86	8426.95
410+59.61	24.86	4.24	88.08	3.95	10284.94	8430.90
411+00	93.01	0.00	157.91	1.59	10442.85	8432.49
411+50	78.69	1.37	82.76	23.77	10525.62	8456.27
412+00	11.15	19.07	39.28	49.20	10564.90	8505.47
412+50	31.49	23.17	53.45	38.38	10618.35	8543.84
413+00	26.68	9.79	49.04	15.53	10667.39	8559.38
413+50	26.61	3.55	59.03	14.58	10726.42	8573.95
414+00	37.39	8.96	66.86	19.94	10793.28	8593.90
414+50	35.03	8.16	7.34	2.10	10800.62	8596.00
414+55.68	34.97	7.73	58.27	13.00	10858.89	8609.00
415+00	36.03	4.94	61.95	8.66	10920.84	8617.66
415+50	30.88	2.54	54.01	9.87	10974.85	8627.52
416+00	27.45	5.99	45.73	6.97	11020.58	8634.49
416+50	21.93	0.04	28.53	3.32	11049.11	8637.81
417+00	8.88	2.83	18.47	27.49	11067.58	8665.30
417+50	11.07	20.92	14.83	55.16	11082.41	8720.46
418+00	4.94	26.73	10.46	58.18	11092.87	8778.64
418+50	6.36	23.54	15.82	56.86	11108.69	8835.50
419+00	10.73	25.59	21.66	43.65	11130.35	8879.15
419+50	12.66	12.12	24.84	24.04	11155.19	8903.18
420+00	14.17	8.64	16.32	37.78	11171.51	8940.96
420+50	3.45	24.00	1.95	28.81	11173.45	8969.77
420+70.57	1.66	36.50	1.93	53.39	11175.39	9023.16
421+00	1.91	42.79	3.06	120.86	11178.45	9144.02
421+50	1.41	62.82	3.08	89.52	11181.52	9233.54
422+00	1.93	14.98	7.74	28.06	11189.26	9261.61
422+50	6.50	9.13	20.88	20.73	11210.14	9282.33
423+00	16.34	8.54	32.16	18.69	11242.31	9301.02
423+50	18.84	7.40	38.16	14.23	11280.46	9315.25
424+00	22.85	4.73	43.77	10.30	11324.24	9325.55
424+50	24.83	4.05	48.04	6.85	11372.28	9332.40
425+00	27.35	1.79	42.85	6.40	11415.13	9338.80
425+50	19.17	3.66	9.74	2.29	11424.87	9341.09
425+63.83	19.03	3.38	23.69	5.28	11448.56	9346.37
426+00	16.37	2.91	23.25	8.88	11471.81	9355.24
426+50	8.74	4.74	11.92	12.02	11483.73	9367.27
427+00	4.13	5.64	1.52	2.53	11485.25	9369.80
427+10	4.06	5.32	3.80	13.77	11489.05	9383.57

STATION	AREAS Square Feet		VOLUMES Cubic Yards		CUMULATIVE VOLUMES Cubic Yards	
	CUT	FILL	CUT	FILL	CUT	FILL
427+50	1.07	9.58	3.47	20.89	11492.52	9404.46
428+00	2.68	8.48	3.50	24.97	11496.02	9429.43
428+50	1.10	13.10	2.49	27.42	11498.51	9456.85
429+00	1.59	10.60	2.96	23.08	11501.47	9479.93
429+50	1.61	9.34	0.34	2.61	11501.81	9482.54
429+55.99	1.49	9.48	2.04	19.25	11503.85	9501.79
430+00	1.01	9.41	3.13	21.47	11506.99	9523.25
430+50	2.37	9.14	7.45	23.27	11514.44	9546.53
431+00	5.68	10.97	7.86	8.66	11522.30	9555.19
431+28	9.48	2.40	9.38	1.27	11531.68	9556.46
431+50	13.55	0.10	33.89	0.12	11565.57	9556.58
432+00	23.05	0.00	40.70	1.49	11606.27	9558.07
432+50	20.90	1.28	35.64	3.40	11641.91	9561.46
433+00	17.58	1.65	27.53	4.82	11669.44	9566.29
433+50	12.15	2.52	20.93	7.31	11690.37	9573.60
434+00	10.45	3.80	4.41	2.20	11694.78	9575.80
434+11.56	10.17	4.42	14.05	11.18	11708.84	9586.98
434+50	9.59	8.12	20.20	34.17	11729.04	9621.15
435+00	12.24	21.34	8.54	15.27	11737.58	9636.42
435+18	13.38	15.30	15.55	39.63	11753.13	9676.05
435+50	12.88	38.33	19.95	83.72	11773.08	9759.77
435+88.88	14.82	55.03	6.20	26.28	11779.28	9786.05
436+00	15.30	47.11	22.33	46.92	11801.61	9832.97
436+36	18.20	9.19	11.70	3.51	11813.31	9836.48
436+50	26.95	1.63	67.86	1.89	11881.17	9838.37
437+00	46.34	0.00	93.18	0.00	11974.35	9838.37
437+50	54.30	0.00	123.51	0.04	12097.86	9838.41
438+00	79.09	0.03	31.24	0.01	12129.10	9838.42
438+10.29	84.87	0.03	147.30	35.45	12276.40	9873.87
438+50	115.68	38.33	236.72	107.75	12513.12	9981.62
439+00	140.31	54.15	276.95	148.65	12790.07	10130.27
439+50	159.21	73.46	301.71	224.15	13091.77	10354.42
439+96	195.61	135.66	28.63	25.50	13120.40	10379.92
440+00	191.75	137.99	312.41	376.71	13432.82	10756.63
440+50	146.33	185.48	253.47	462.76	13686.28	11219.40
441+00	127.93	211.90	162.03	336.41	13848.32	11555.81
441+35.01	122.51	200.60	67.74	139.24	13916.06	11695.05
441+50	121.49	200.61	223.57	491.09	14139.63	12186.13
442+00	119.97	223.69	224.47	436.54	14364.11	12622.67
442+50	122.46	153.49	119.21	207.42	14483.32	12830.09
442+75.61	128.87	196.35	119.99	226.59	14603.31	13056.68
443+00	138.54	196.82	272.90	400.32	14876.20	13457.01
443+50	157.97	141.76	310.28	183.55	15186.48	13640.56
444+00	179.08	14.13	171.07	15.26	15357.55	13655.81
444+25	192.58	11.90	178.47	16.17	15536.02	13671.98
444+50	195.25	15.69	180.67	19.99	15716.69	13691.98
444+75	197.49	18.43	182.67	23.09	15899.36	13715.06
445+00	199.74	20.97	186.69	25.38	16086.05	13740.44
445+25	206.49	22.35	185.41	27.69	16271.45	13768.13
445+50	197.04	24.91	176.90	33.67	16448.35	13801.80
445+75	187.87	32.58	169.82	41.25	16618.18	13843.06
446+00	181.65	37.87	323.84	279.50	16942.01	14122.55
446+50	170.63	199.67	69.29	101.55	17011.30	14224.11
446+61.05	170.27	188.90	244.94	270.45	17256.23	14494.56
447+00	169.33	111.08	216.06	146.39	17472.30	14640.95
447+34.78	166.09	70.73	91.83	40.51	17564.12	14681.46
447+50	162.10	40.75	272.35	87.38	17836.47	14768.84
448+00	133.97	32.30	61.26	25.72	17897.73	14794.56
448+13	122.23	50.46	140.44	150.88	18038.17	14945.44
448+50	84.54	120.83	135.57	364.28	18173.75	15309.73
449+00	63.34	185.58	97.26	381.61	18271.01	15691.34
449+50	42.77	135.32	68.85	310.52	18339.86	16001.85
450+00	32.34	125.47	56.76	266.08	18396.62	16267.93
450+50	29.50	97.66	20.51	81.78	18417.13	16349.71
450+69.02	29.15	82.60	33.16	98.71	18450.30	16448.42
451+00	28.65	55.03	34.77	71.85	18485.06	16520.27
451+32	30.02	41.97	21.95	27.70	18507.01	16547.97
451+50	35.83	24.51	90.60	28.37	18597.62	16576.34
452+00	62.02	0.00	11.42	0.00	18609.03	16576.34
452+09.94	0.00	0.00	0.00	0.00	18609.03	16576.34

NOTE: QUANTITIES REFLECT A 25% SHRINK FACTOR.

AG-0355-S-09-0004

No.	Revision	By	Date
1	50% SUBMITTAL	WBL	6/23/06
2	95% SUBMITTAL	WBL	8/31/06
3	CONST. PLANS	WBL	11/10/06

WARNING 0 1 2 IF THIS BAR DOES NOT MEASURE 1" THEN DRAWING IS NOT TO SCALE

U.S.D.A. FOREST SERVICE – REGION 1
BEARTOOTH RANGER DISTRICT – CUSTER NATIONAL FOREST
RECONSTRUCTION OF WEST FORK ROCK CREEK ROAD #2071
PHASE IV
EARTHWORK QUANTITY TABLES

GREAT WEST ENGINEERING
2030 11th AVENUE
HELENA, MT 59601
(406) 449-8627, FAX (406) 449-8631

GreatWest engineering

Sheet No.
D–4

F:\1-06148-USFS W FORK ROCK CREEK\CADD-06148\M551104\SHEETS\west_balance.dwg 1/9/2007 11:39:11 AM MST

Curve number: 1
Curve Detail Information

PC Sta: 301+95.18
Radius: 1300.000
Spiral in: 0.000
Spiral out: 0.000
Method: B
Beginning: 301+95.18
E value: 0.030000

PT Sta: 307+06.55
Length: 511.372
TS Sta: 301+95.18
ST Sta: 307+06.55
Direction: Left arc
Ending: 307+06.55
Rollover: 0.238000

Transition In

Runout: 60.000
Runoff: 120.000
% Runoff: 67.000

Station: 300+54.78
Start sta: 301+14.78
End sta: 302+34.78

Transition Out

Runout: 60.000
Runoff: 120.000
% Runoff: 67.000

Station: 308+46.95
Start sta: 306+66.95
End sta: 307+86.95

Subgrade: Parallel

Trans In: 0.000

Trans Out: 0.000

Curve number: 2
Curve Detail Information

PC Sta: 311+60.36
Radius: 1000.000
Spiral in: 0.000
Spiral out: 0.000
Method: B
Beginning: 311+60.36
E value: 0.030000

PT Sta: 315+72.44
Length: 412.078
TS Sta: 311+60.36
ST Sta: 315+72.44
Direction: Left arc
Ending: 315+72.44
Rollover: 0.238000

Transition In

Runout: 60.000
Runoff: 120.000
% Runoff: 67.000

Station: 310+19.96
Start sta: 310+79.96
End sta: 311+99.96

Transition Out

Runout: 0.000
Runoff: 78.340
% Runoff: 48.930

Station: 316+10.77
Start sta: 315+32.43
End sta: 316+10.77

Subgrade: Parallel

Trans In: 0.000

Trans Out: 0.000

Curve number: 3
Curve Detail Information

PC Sta: 316+49.12
Radius: 3500.000
Spiral in: 0.000
Spiral out: 0.000
Method: B
Beginning: 316+49.12
E value: 0.020000

PT Sta: 318+72.23
Length: 223.112
TS Sta: 316+49.12
ST Sta: 318+72.23
Direction: Left arc
Ending: 318+72.23
Rollover: 0.238000

Transition In

Runout: 0.000
Runoff: 78.340
% Runoff: 48.930

Station: 316+10.78
Start sta: 316+10.78
End sta: 316+89.12

Transition Out

Runout: 60.000
Runoff: 120.000
% Runoff: 67.000

Station: 320+12.63
Start sta: 318+32.63
End sta: 319+52.63

Subgrade: Parallel

Trans In: 0.000

Trans Out: 0.000

Curve number: 4
Curve Detail Information

PC Sta: 328+74.71
Radius: 2400.000
Spiral in: 0.000
Spiral out: 0.000
Method: B
Beginning: 328+74.71
E value: 0.030000

PT Sta: 332+28.64
Length: 353.932
TS Sta: 328+74.71
ST Sta: 332+28.64
Direction: Right arc
Ending: 332+28.64
Rollover: 0.238000

Transition In

Runout: 60.000
Runoff: 120.000
% Runoff: 67.000

Station: 327+34.31
Start sta: 327+94.31
End sta: 329+14.31

Transition Out

Runoff: 120.000
% Runoff: 67.000

Start sta: 331+89.04
End sta: 333+34.10*

Subgrade: Parallel

Trans In: 0.000

Trans Out: 0.000

* MATCH EXISTING CROSS SLOPE AT BRIDGE.

Curve number: 5
Curve Detail Information

PC Sta: 338+16.24
Radius: 2800.000
Spiral in: 0.000
Spiral out: 0.000
Method: B
Beginning: 338+16.24
E value: 0.030000

PT Sta: 342+53.01
Length: 436.765
TS Sta: 338+16.24
ST Sta: 342+53.01
Direction: Right arc
Ending: 342+53.01
Rollover: 0.238000

Transition In

Runout: 60.000
Runoff: 120.000
% Runoff: 67.000

Station: 336+75.84
Start sta: 337+35.84
End sta: 338+55.84

Transition Out

Runout: 56.700
Runoff: 120.000
% Runoff: 67.000

Station: 343+90.11
Start sta: 342+13.41
End sta: 343+33.41

Subgrade: Parallel

Trans In: 0.000

Trans Out: 0.000

Curve number: 6
Curve Detail Information

PC Sta: 345+27.40
Radius: 3000.000
Spiral in: 0.000
Spiral out: 0.000
Method: B
Beginning: 345+27.40
E value: 0.030000

PT Sta: 351+07.98
Length: 580.580
TS Sta: 345+27.40
ST Sta: 351+07.98
Direction: Left arc
Ending: 351+07.98
Rollover: 0.238000

Transition In

Runout: 56.700
Runoff: 120.000
% Runoff: 67.000

Station: 343+90.30
Start sta: 344+47
End sta: 345+67

Transition Out

Runout: 60.000
Runoff: 120.000
% Runoff: 67.000

Station: 352+48.38
Start sta: 350+68.38
End sta: 351+88.38

Subgrade: Parallel

Trans In: 0.000

Trans Out: 0.000

Curve number: 7
Curve Detail Information

PC Sta: 351+07.98
Radius: 1400.000
Spiral in: 0.000
Spiral out: 0.000
Method: B
Beginning: 351+07.98
E value: 0.030000

PT Sta: 353+39.53
Length: 231.545
TS Sta: 351+07.98
ST Sta: 353+39.53
Direction: Right arc
Ending: 353+39.53
Rollover: 0.238000

Transition In

Runout: 60.000
Runoff: 120.000
% Runoff: 67.000

Station: 349+67.58
Start sta: 350+27.58
End sta: 351+47.58

Transition Out

Runout: 52.300
Runoff: 120.000
% Runoff: 67.000

Station: 354+72.23
Start sta: 352+99.93
End sta: 354+19.93

Subgrade: Parallel

Trans In: 0.000

Trans Out: 0.000

Curve number: 8
Curve Detail Information

PC Sta: 356+05.20
Radius: 1200.000
Spiral in: 0.000
Spiral out: 0.000
Method: B
Beginning: 356+05.20
E value: 0.030000

PT Sta: 361+82.43
Length: 577.231
TS Sta: 356+05.20
ST Sta: 361+82.43
Direction: Left arc
Ending: 361+82.43
Rollover: 0.238000

Transition In

Runout: 52.300
Runoff: 120.000
% Runoff: 67.000

Station: 354+72.50
Start sta: 355+24.80
End sta: 356+44.80

Transition Out

Runout: 60.000
Runoff: 120.000
% Runoff: 67.000

Station: 363+22.83
Start sta: 361+42.83
End sta: 362+62.83

Subgrade: Parallel

Trans In: 0.000

Trans Out: 0.000

Curve number: 9
Curve Detail Information

PC Sta: 365+43.93
Radius: 1200.000
Spiral in: 0.000
Spiral out: 0.000
Method: B
Beginning: 365+43.93
E value: 0.030000

PT Sta: 370+46.17
Length: 502.244
TS Sta: 365+43.93
ST Sta: 370+46.17
Direction: Right arc
Ending: 370+46.17
Rollover: 0.238000

Transition In

Runout: 60.000
Runoff: 120.000
% Runoff: 67.000

Station: 364+03.53
Start sta: 364+63.53
End sta: 365+83.53

Transition Out

Runout: 0.000
Runoff: 96.230
% Runoff: 58.430

Station: 371+02.40
Start sta: 370+06.17
End sta: 371+02.40

Subgrade: Parallel

Trans In: 0.000

Trans Out: 0.000

Curve number: 10
Curve Detail Information

PC Sta: 371+96.99
Radius: 1000.000
Spiral in: 0.000
Spiral out: 0.000
Method: B
Beginning: 371+96.99
E value: 0.030000

PT Sta: 376+05.17
Length: 408.180
TS Sta: 371+96.99
ST Sta: 376+05.17
Direction: Left arc
Ending: 376+05.17
Rollover: 0.238000

Transition In

Runout: 0.000
Runoff: 96.230
% Runoff: 58.430

Station: 371+40.77
Start sta: 371+40.77
End sta: 372+37

Transition Out

Runout: 21.830
Runoff: 120.000
% Runoff: 67.000

Station: 377+07.40
Start sta: 375+65.57
End sta: 376+85.57

Subgrade: Parallel

Trans In: 0.000

Trans Out: 0.000

Curve number: 11
Curve Detail Information

PC Sta: 378+09.84
Radius: 4200.000
Spiral in: 0.000
Spiral out: 0.000
Method: B
Beginning: 378+09.84
E value: 0.020000

PT Sta: 382+67.62
Length: 457.782
TS Sta: 378+09.84
ST Sta: 382+67.62
Direction: Left arc
Ending: 382+67.62
Rollover: 0.238000

Transition In

Runout: 21.830
Runoff: 120.000
% Runoff: 67.000

Station: 377+07.61
Start sta: 377+29.44
End sta: 378+49.44

Transition Out

Runout: 60.000
Runoff: 120.000
% Runoff: 67.000

Station: 384+08.02
Start sta: 382+28.02
End sta: 383+48.02

Subgrade: Parallel

Trans In: 0.000

Trans Out: 0.000

Curve number: 12
Curve Detail Information

PC Sta: 387+86.31
Radius: 1200.000
Spiral in: 0.000
Spiral out: 0.000
Method: B
Beginning: 387+86.31
E value: 0.030000

PT Sta: 389+13.83
Length: 127.516
TS Sta: 387+86.31
ST Sta: 389+13.83
Direction: Left arc
Ending: 389+13.83
Rollover: 0.238000

Transition In

Runout: 60.000
Runoff: 120.000
% Runoff: 67.000

Station: 386+45.91
Start sta: 387+05.91
End sta: 388+25.91

Transition Out

Runout: 60.000
Runoff: 120.000
% Runoff: 67.000

Station: 390+54.23
Start sta: 388+74.23
End sta: 389+94.23

Subgrade: Parallel

Trans In: 0.000

Trans Out: 0.000

Curve number: 13
Curve Detail Information

PC Sta: 394+76
Radius: 2400.000
Spiral in: 0.000
Spiral out: 0.000
Method: B
Beginning: 394+76
E value: 0.030000

PT Sta: 400+37.75
Length: 561.751
TS Sta: 394+76
ST Sta: 400+37.75
Direction: Right arc
Ending: 400+37.75
Rollover: 0.238000

Transition In

Runout: 60.000
Runoff: 120.000
% Runoff: 67.000

Station: 393+35.60
Start sta: 393+95.60
End sta: 395+15.60

Transition Out

Runout: 42.150
Runoff: 120.000
% Runoff: 67.000

Station: 401+60.30
Start sta: 399+98.15
End sta: 401+18.15

Subgrade: Parallel

Trans In: 0.000

Trans Out: 0.000

Curve number: 14
Curve Detail Information

PC Sta: 402+87.72
Radius: 2050.000
Spiral in: 0.000
Spiral out: 0.000
Method: B
Beginning: 402+87.72
E value: 0.030000

PT Sta: 407+51.50
Length: 463.783
TS Sta: 402+87.72
ST Sta: 407+51.50
Direction: Right arc
Ending: 407+51.50
Rollover: 0.238000

Transition In

Runout: 42.150
Runoff: 120.000
% Runoff: 67.000

Station: 401+65.17
Start sta: 402+07.32
End sta: 403+27.32

Transition Out

Runout: 60.000
Runoff: 120.000
% Runoff: 67.000

Station: 408+91.90
Start sta: 407+11.90
End sta: 408+31.90

Subgrade: Parallel

Trans In: 0.000

Trans Out: 0.000

Curve number: 15
Curve Detail Information

PC Sta: 410+59.61
Radius: 2500.000
Spiral in: 0.000
Spiral out: 0.000
Method: B
Beginning: 410+59.61
E value: 0.030000

PT Sta: 414+55.68
Length: 396.073
TS Sta: 410+59.61
ST Sta: 414+55.68
Direction: Left arc
Ending: 414+55.68
Rollover: 0.238000

Transition In

Runout: 60.000
Runoff: 120.000
% Runoff: 67.000

Station: 409+19.21
Start sta: 409+79.21
End sta: 410+99.21

Transition Out

Runout: 60.000
Runoff: 120.000
% Runoff: 67.000

Station: 415+96.08
Start sta: 414+16.08
End sta: 415+36.08

Subgrade: Parallel

Trans In: 0.000

Trans Out: 0.000

AG-0355-S-09-0004

● Project No. 04M551.103 ● D-2 LAYOUT ● Date MAY 2004 ● Designed LHB ● Drawn SMJ ● Checked LHB ● Approved GCU

No.	Revision	By	Date
1	50% SUBMITTAL	RDH	12/1/03
2	95% SUBMITTAL	SMJ	1/30/04
3	CONST. PLANS	SMJ	5/05/04

WARNING
0 1 2
IF THIS BAR DOES NOT MEASURE 1" THEN DRAWING IS NOT TO SCALE

U.S.D.A. FOREST SERVICE – REGION 1
BEARTOOTH RANGER DISTRICT – CUSTER NATIONAL FOREST
RECONSTRUCTION OF WEST FORK ROCK CREEK ROAD #2071
PHASE IV
CURVE DETAILS

HKM Engineering Inc.
601 Nikles Drive
Suite 2
Bozeman, Montana 59715
(406) 586-8834, FAX (406) 586-1730

Sheet No.
D–5

F:\1-06148-USFS W FORK ROCK CREEK\CADD-06148\M551104\SHEETS\DET-SHEETS.dwg 2/2/2007 10:02:00 AM MST

Copyright © 2004 HKM Engineering Inc., All Rights Reserved.

Curve number: 16
Curve Detail Information

PC Sta: 420+70.57
Radius: 1100.000
Spiral in: 0.000
Spiral out: 0.000
Method: B
Beginning: 420+70.57
E value: 0.030000

PT Sta: 425+63.83
Length: 493.265
TS Sta: 420+70.57
ST Sta: 425+63.83
Direction: Right arc
Ending: 425+63.83
Rollover: 0.238000

Transition In

Runout: 60.000
Runoff: 120.000
% Runoff: 67.000

Station: 419+30.17
Start sta: 419+90.17
End sta: 421+10.17

Transition Out

Runout: 60.000
Runoff: 120.000
% Runoff: 67.000

Station: 427+04.23
Start sta: 425+24.23
End sta: 426+44.23

Subgrade: Parallel

Trans In: 0.000

Trans Out: 0.000

Curve number: 17
Curve Detail Information

PC Sta: 425+63.83
Radius: 6000.000
Spiral in: 0.000
Spiral out: 0.000
Method: B
Beginning: 425+63.83
E value: 0.020000

PT Sta: 429+55.99
Length: 392.152
TS Sta: 425+63.83
ST Sta: 429+55.99
Direction: Right arc
Ending: 429+55.99
Rollover: 0.238000

Transition In

Runout: 60.000
Runoff: 120.000
% Runoff: 67.000

Station: 424+23.43
Start sta: 424+83.43
End sta: 426+03.43

Transition Out

Runout: 60.000
Runoff: 120.000
% Runoff: 67.000

Station: 430+96.39
Start sta: 429+16.39
End sta: 430+36.39

Subgrade: Parallel

Trans In: 0.000

Trans Out: 0.000

Curve number: 18
Curve Detail Information

PC Sta: 434+11.56
Radius: 5000.000
Spiral in: 0.000
Spiral out: 0.000
Method: B
Beginning: 434+11.56
E value: 0.020000

PT Sta: 435+88.88
Length: 177.328
TS Sta: 434+11.56
ST Sta: 435+88.88
Direction: Right arc
Ending: 435+88.88
Rollover: OFF

Transition In

Runout: 60.000
Runoff: 120.000
% Runoff: 67.000

Station: 432+71.16
Start sta: 433+31.16
End sta: 434+51.16

Transition Out

Runout: 60.000
Runoff: 120.000
% Runoff: 67.000

Station: 437+29.28
Start sta: 435+49.28
End sta: 436+69.28

Subgrade: Parallel

Trans In: 0.000

Trans Out: 0.000

Curve number: 19
Curve Detail Information

PC Sta: 438+10.29
Radius: 5000.000
Spiral in: 0.000
Spiral out: 0.000
Method: B
Beginning: 438+10.29
E value: 0.020000

PT Sta: 441+35.01
Length: 324.718
TS Sta: 438+10.29
ST Sta: 441+35.01
Direction: Left arc
Ending: 441+35.01
Rollover: OFF

Transition In

Runout: 60.000
Runoff: 120.000
% Runoff: 67.000

Station: 436+69.89
Start sta: 437+29.89
End sta: 438+49.89

Transition Out

Runout: 60.000
Runoff: 120.000
% Runoff: 67.000

Station: 442+75.41
Start sta: 440+95.41
End sta: 442+15.41

Subgrade: Parallel

Trans In: 0.000

Trans Out: 0.000

Curve number: 20
Curve Detail Information

PC Sta: 442+75.61
Radius: 1355.000
Spiral in: 0.000
Spiral out: 0.000
Method: B
Beginning: 442+75.61
E value: 0.030000

PT Sta: 446+61.05
Length: 385.438
TS Sta: 442+75.61
ST Sta: 446+61.05
Direction: Left arc
Ending: 446+61.05
Rollover: OFF

Transition In

Runout: 2.980
Runoff: 120.000
% Runoff: 67.000

Station: 441+92.23
Start sta: 441+95.21
End sta: 443+15.21

Transition Out

Runout: 0.000
Runoff: 84.060
% Runoff: 52.417

Station: 447+05.11
Start sta: 446+21.05
End sta: 447+05.11

Subgrade: Parallel

Trans In: 0.000

Trans Out: 0.000

Curve number: 21
Curve Detail Information

PC Sta: 447+34.78
Radius: 1000.000
Spiral in: 0.000
Spiral out: 0.000
Method: B
Beginning: 447+34.78
E value: 0.030000

PT Sta: 450+69.02
Length: 334.232
TS Sta: 447+34.78
ST Sta: 450+69.02
Direction: Left arc
Ending: 450+69.02
Rollover: OFF

Transition In

Runout: 0.000
Runoff: 84.060
% Runoff: 52.417

Station: 446+90.72
Start sta: 446+90.72
End sta: 447+74.78

Transition Out

Runout: 60.000
Runoff: 120.000
% Runoff: 67.000

Station: 452+09.42
Start sta: 450+29.42
End sta: 451+49.42

Subgrade: Parallel

Trans In: 0.000

Trans Out: 0.000

AG-0355-S-09-0004

No.	Revision	By	Date
1	50% SUBMITTAL	WBL	6/23/06
2	95% SUBMITTAL	WBL	8/31/06
3	CONST. PLANS	WBL	11/10/06

WARNING
0 1 2
IF THIS BAR DOES NOT MEASURE 1" THEN DRAWING IS NOT TO SCALE

U.S.D.A. FOREST SERVICE – REGION 1
BEARTOOTH RANGER DISTRICT – CUSTER NATIONAL FOREST
RECONSTRUCTION OF WEST FORK ROCK CREEK ROAD #2071
PHASE IV
CURVE DETAILS

GREAT WEST ENGINEERING
2030 11th AVENUE
HELENA, MT 59601
(406) 449-8627, FAX (406) 449-8631

Sheet No.
D–6

F:\1-06148-USFS W FORK ROCK CREEK\CADD-06148\M551104\SHEETS\DET-SHEETS.dwg 2/2/2007 10:02:00 AM MST

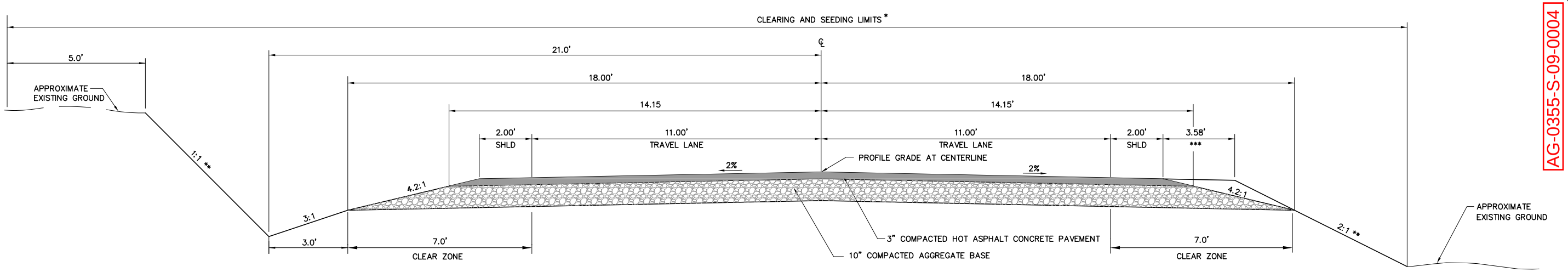

* MINIMUM CLEARANCE WIDTH FROM ℄ = 23'

** SEE CROSS SECTIONS FOR VARIATIONS

*** SHOULDER WIDENING
SEE PLANS & CROSS SECTIONS FOR LOCATIONS

NOTE: DO NOT PERMIT OBSTACLES TO REMAIN IN THE CLEAR ZONE.

TYPICAL ROAD SECTION

SCALE :1"=2'

STA 300+00 TO STA 444+00 & 446+00 TO 452+09.94

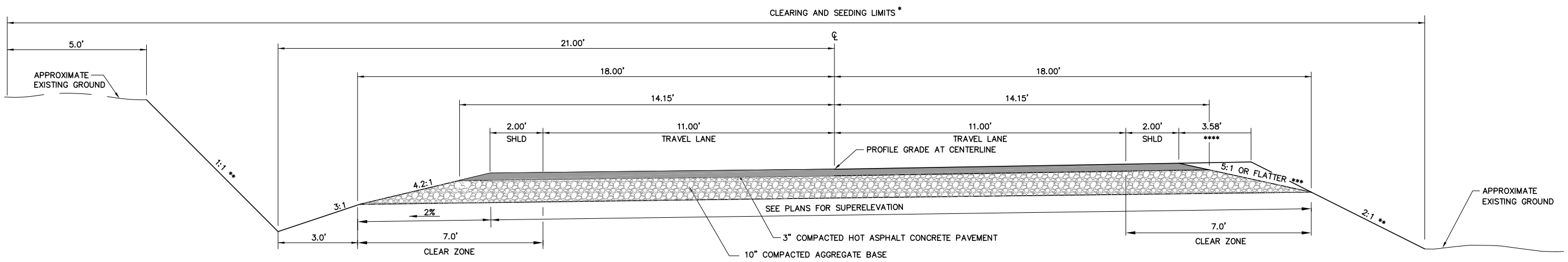

* MINIMUM CLEARANCE WIDTH FROM C = 23'

** SEE CROSS SECTIONS FOR VARIATIONS

*** MAINTAIN SUBGRADE WIDTH THROUGH CURVES TO PROVIDE CLEAR ZONE

**** SHOULDER WIDENING

NOTE: DO NOT PERMIT OBSTACLES TO REMAIN IN THE CLEAR ZONE.

MAINTAIN CLEAR ZONE WIDTH THROUGH CURVES

REVERSE FOR CURVES RIGHT

TYPICAL SUPERELEVATED ROAD SECTION

SCALE :1"=2'

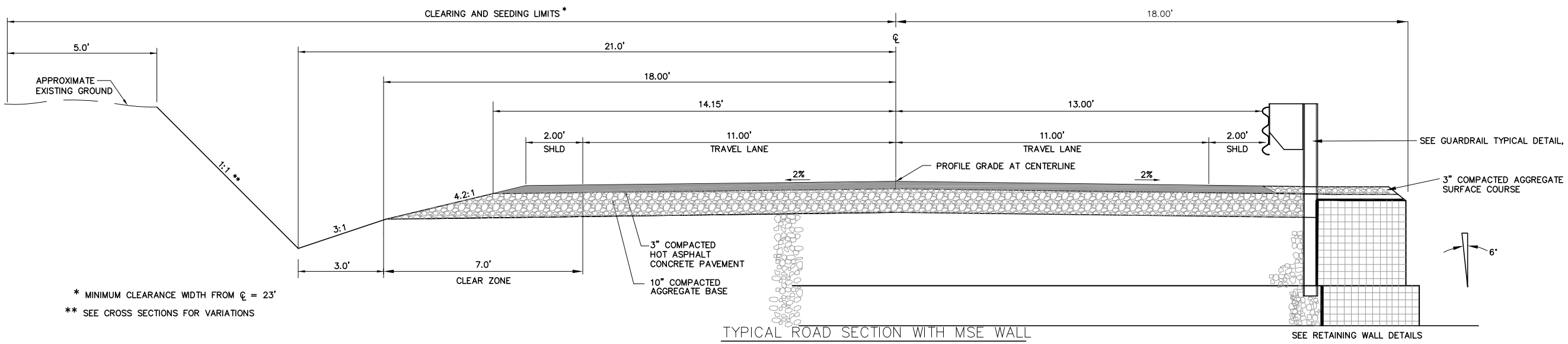

* MINIMUM CLEARANCE WIDTH FROM ℄ = 23'

** SEE CROSS SECTIONS FOR VARIATIONS

TYPICAL ROAD SECTION WITH MSE WALL

SCALE :1"=2'

STA 444+00 TO STA 446+00

AG-0355-S-09-0004

No.	Revision	By	Date
1	50% SUBMITTAL	RDH	12/1/03
2	95% SUBMITTAL	smj	1/30/04
3	CONST. PLANS	smj	5/07/04

WARNING
0 1 2
IF THIS BAR DOES NOT MEASURE 1" THEN DRAWING IS NOT TO SCALE

● Project No. 04M551.103 ● D-1 LAYOUT ● Date MAY 2004 ● Designed LHB ● Drawn smj ● Checked LHB ● Approved GCU

U.S.D.A. FOREST SERVICE – REGION 1
BEARTOOTH RANGER DISTRICT – CUSTER NATIONAL FOREST
RECONSTRUCTION OF WEST FORK ROCK CREEK ROAD #2071
PHASE IV
TYPICAL SECTIONS

HKM Engineering Inc.
601 Nikles Drive
Suite 2
Bozeman, Montana 59715
(406) 586-8834, FAX (406) 586-1730

Sheet No.
D–7

F:\1-06148-USFS W FORK ROCK CREEK\CADD-06148\M551104\SHEETS\DET-SHEETS.dwg 2/2/2007 10:02:00 AM MST

Copyright © 2004 HKM Engineering Inc., All Rights Reserved.

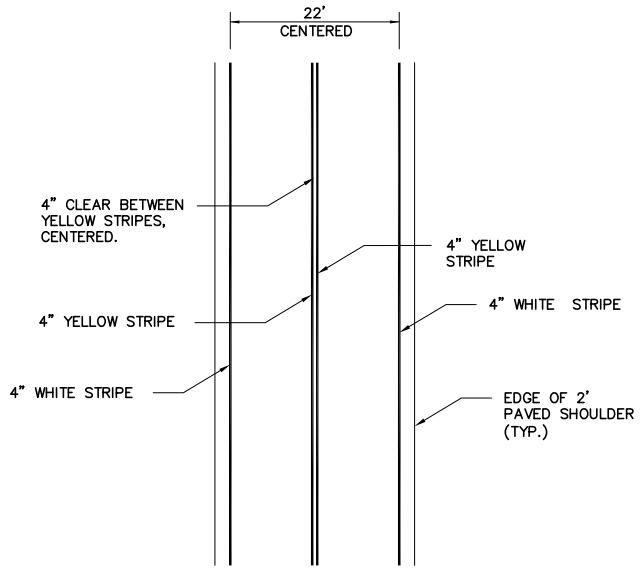

NOTE: TYPE D EPOXY PAVEMENT MARKINGS.
SEE SECTION 634 FOR SPECIFICATIONS

DETAIL – TYPICAL ROAD STRIPING PLAN

SCALE : NONE

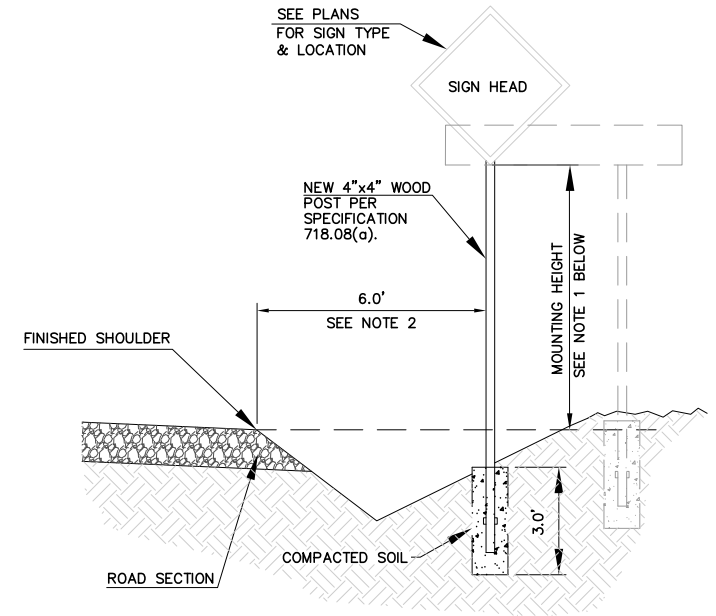

NOTES:

1. MOUNTING HEIGHTS ARE AS FOLLOWS:
   TRAILHEAD: ADA SIGNS – 5 FT
   OTHER SIGNS – 7 FT
   ROADWAY: SPEED LIMIT SIGNS – 7 FT
   OBJECT MARKERS – 4 F
   OTHER SIGNS – 7 FT
2. WHERE ROADSIDE TERRAIN LIMITS LATERAL OFFSET, LOCATE SIGNS 2' TO 6' FROM THE FINISHED SHOULDER.
3. OBTAIN APPROVAL FROM THE CONTRACTING OFFICER FOR ALL SIGN LOCATIONS PRIOR TO INSTALLATION.

DETAIL – TYPICAL SIGN INSTALLATION

SCALE : NONE

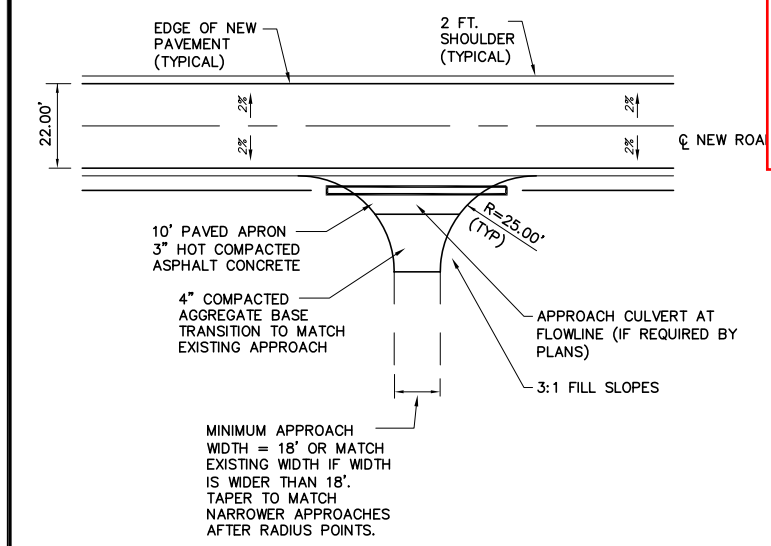

NOTE: RECONSTRUCT APPROACH TO BE AS CLOSE TO PERPENDICULAR TO THE ROAD AS POSSIBLE.

DETAIL – TYPICAL APPROACH RECONSTRUCTION

SCALE : NONE

AG-0355-S-09-0004

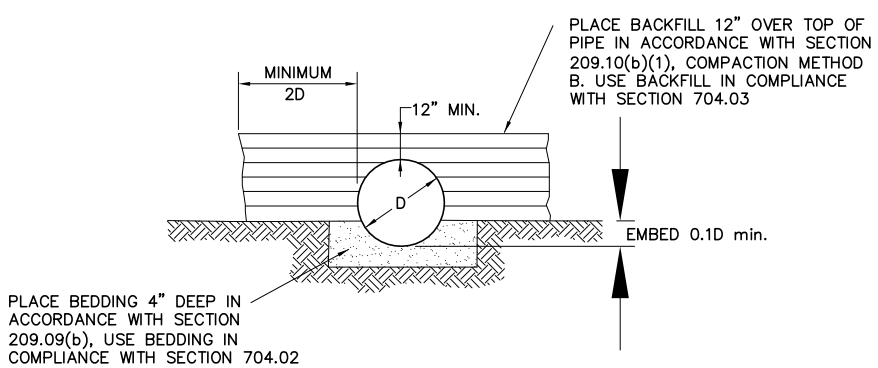

DETAIL – CULVERT BACKFILL & BEDDING

SCALE : NONE

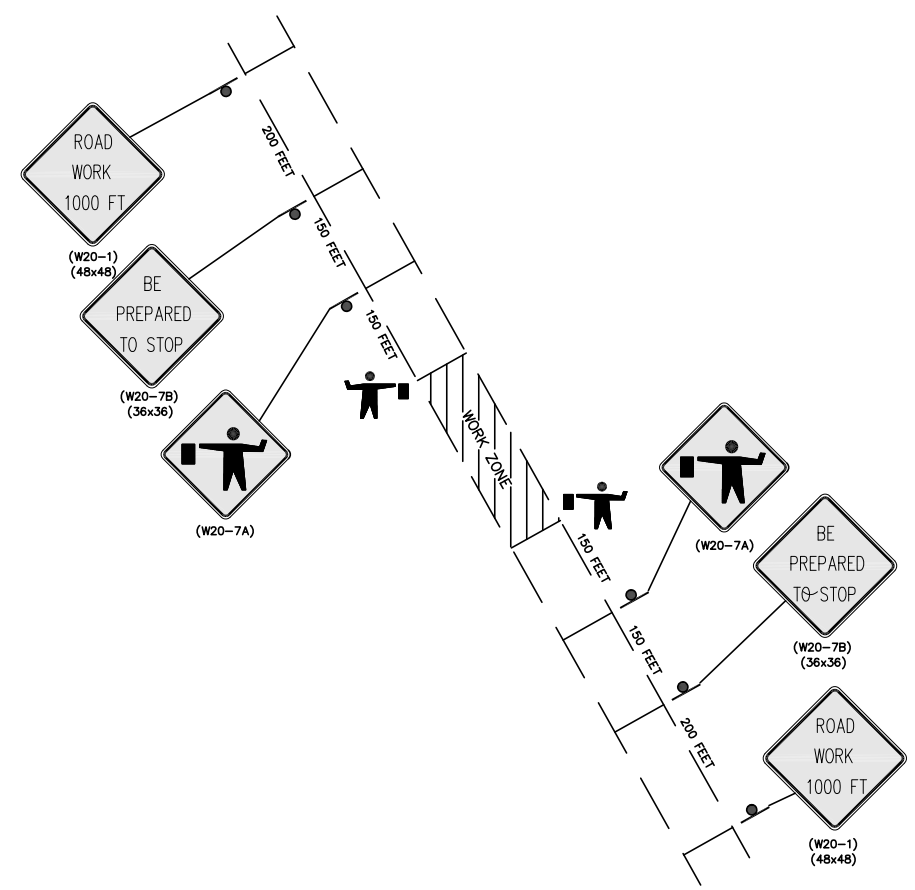

DETAIL – WORK ZONE TRAFFIC CONTROL

SCALE : NONE

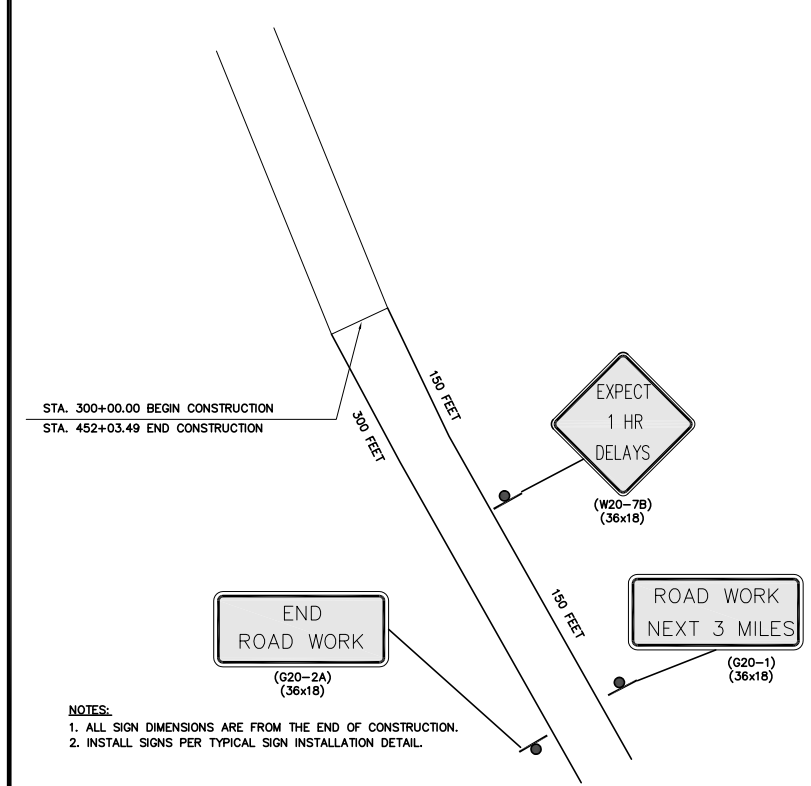

NOTES:

1. ALL SIGN DIMENSIONS ARE FROM THE END OF CONSTRUCTION.
2. INSTALL SIGNS PER TYPICAL SIGN INSTALLATION DETAIL.

DETAIL – TEMPORARY TRAFFIC CONTROL

SCALE : NONE

No.	Revision	By	Date
1	50% SUBMITTAL	RDH	12/1/03
2	95% SUBMITTAL	SMJ	1/30/04
3	CONST. PLANS	DBG	5/05/04

WARNING
0 1 2
IF THIS BAR DOES NOT MEASURE 1" THEN DRAWING IS NOT TO SCALE

U.S.D.A. FOREST SERVICE – REGION 1
BEARTOOTH RANGER DISTRICT – CUSTER NATIONAL FOREST
RECONSTRUCTION OF WEST FORK ROCK CREEK ROAD #2071
PHASE IV
TRAFFIC CONTROL, SIGNING, & STRIPPING DETAILS

● Project No. 04M551.103 ● D-2 LAYOUT ● Date MAY 2004 ● Designed LHB ● Drawn SMJ ● Checked LHB ● Approved GCU

HKM Engineering Inc.
601 Nikles Drive
Suite 2
Bozeman, Montana 59715
(406) 586-8834, FAX (406) 586-1730

Sheet No.
D–8

F:\1-06148-USFS W FORK ROCK CREEK\CADD-06148\M551104\SHEETS\DET-SHEETS.dwg 2/2/2007 10:02:00 AM MST

Copyright @ 2004 HKM Engineering Inc., All Rights Reserved.

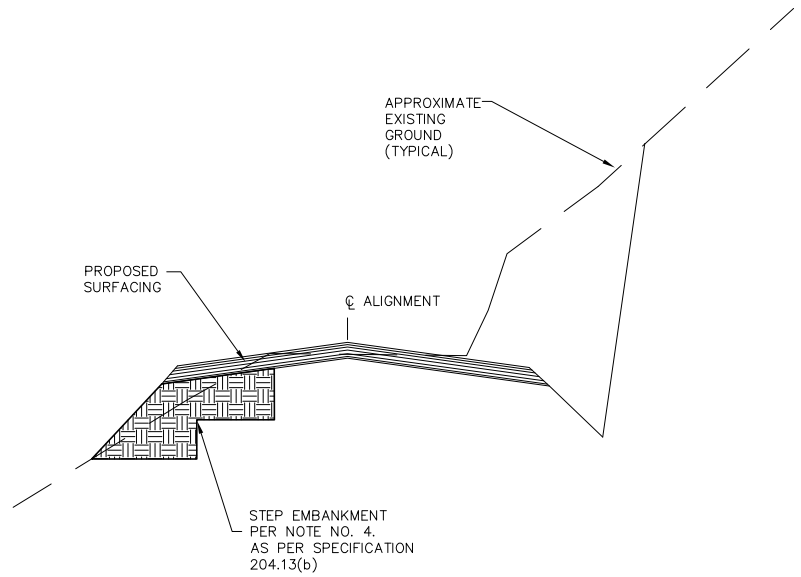

TYPICAL ROAD SECTION WITH STEPPED SLOPE
SCALE : NONE

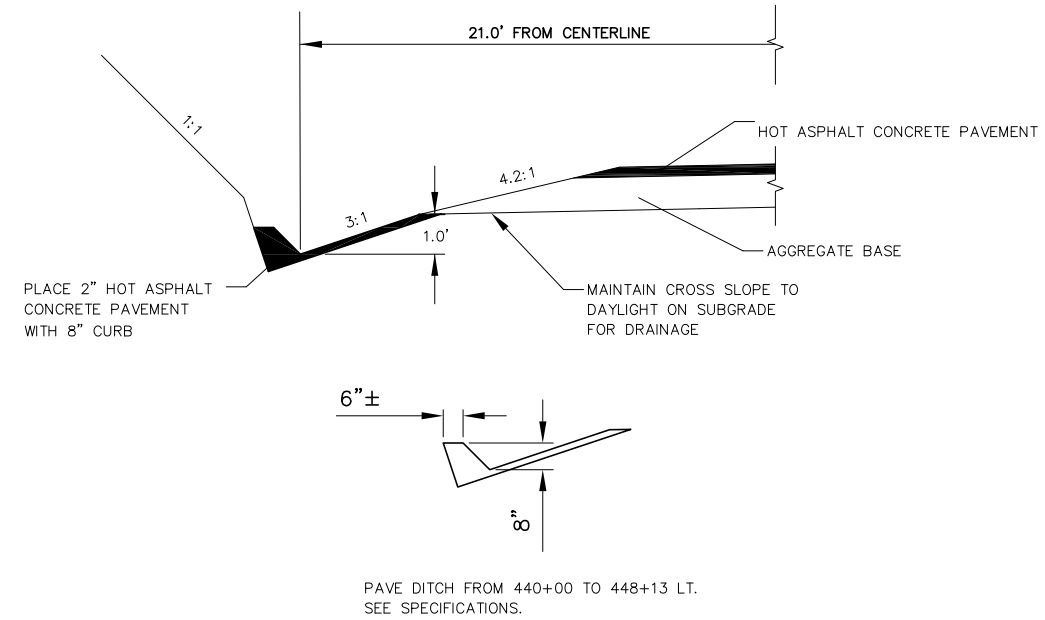

TYPICAL ROAD SECTION WITH PAVED DITCH
SCALE : NONE

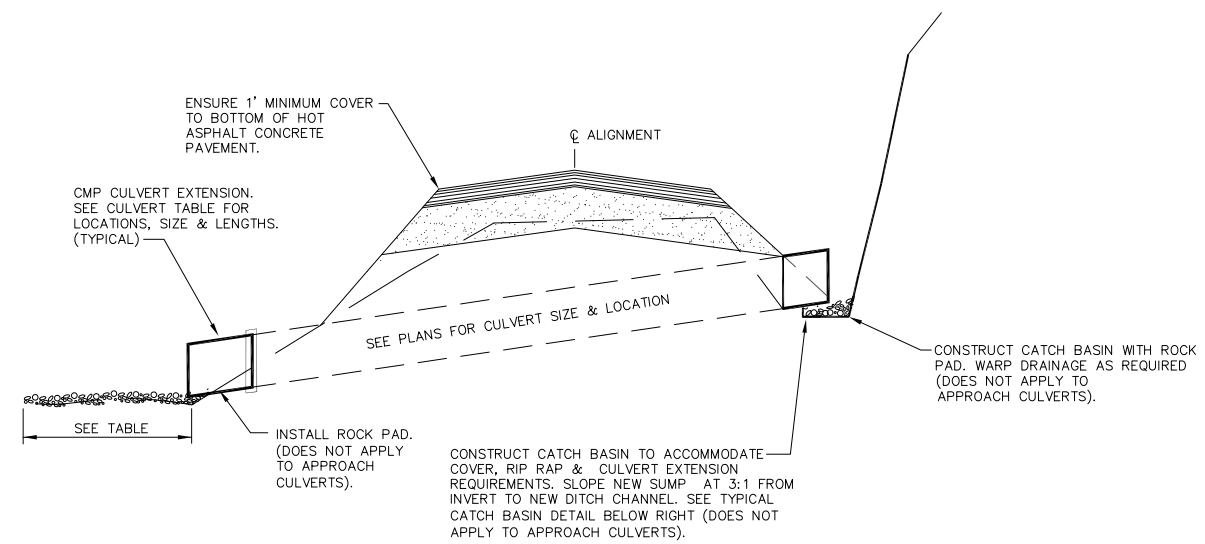

OUTFALL PAD DIMENSIONS

CULVERT	A	B	C
386+04	8'	12'	13'
409+94	6'	7'	14'
18" & 15"x21"	4'	4'	4'
24" & 20"x28"	6'	6'	6'

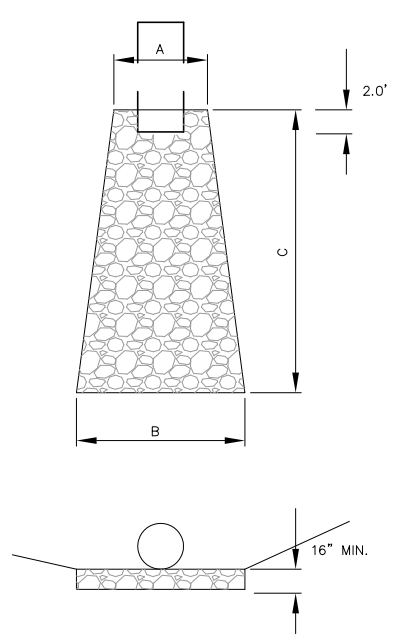

TYPICAL ROCK PAD AT OUTFALL

NOTES:

1. ROCK SHALL BE NATIVE ROCK MEETING THE REQUIREMENTS FOR CLASS I RIPRAP, PER SECTION 251.
2. NEW CULVERT INSTALLATION & CULVERT EXTENSIONS SHALL BE APPROVED BY C.O.R. SUCH AS TO MINIMIZE THE NUMBER OF BANDED JOINTS.
3. CULVERT LENGTHS SHOWN ON PLANS ARE APPROXIMATE. ACTUAL CULVERT EXTENSION LENGTHS SHALL BE FIELD VERIFIED BASED ON CONSTRUCTION STAKING. CULVERT EXTENSIONS SHALL BE INSTALLED TO PROVIDE POSITIVE DRAINAGE. THE CONTRACTOR SHALL CONFIRM CULVERT SIZES AND LENGTHS PRIOR TO ORDERING.
4. TREATMENT OF DAMAGED SPELTER: THE DAMAGED OR CORRODED ENDS OF EXISTING METAL PIPE TO BE EXTENDED SHALL BE REMOVED. IF THE DAMAGED END IS FLAME CUT, THE BURNED SPELTER ON THE GALVANIZED PIPE SHALL BE WIRE BRUSHED TO CLEAN METAL, AND THE AREA SHALL BE PAINTED WITH TWO COATS OF PAINT, HIGH IN ZINC CONTENT, FOR REPAIR OF THE GALVANIZED SURFACES.
5. CULVERT BANDS: BANDS WITH DIMPLED PROJECTIONS ARE NOR ACCEPTABLE
6. BANDING COUPLINGS SHALL MATCH THE EXISTING CMP CULVERT MATERIAL AND SHALL BE APPROVED BY THE C.O.R.

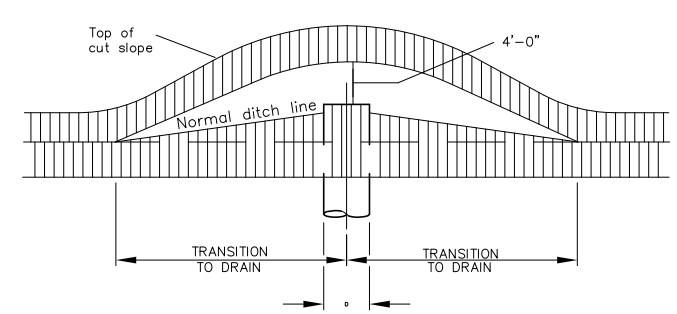

TYPICAL CATCH BASIN DETAIL

CULVERT DETAILS
SCALE : NONE

AG-0355-S-09-0004

No.	Revision	By	Date
1	50% SUBMITTAL	RDH	12/1/03
2	95% SUBMITTAL	SMJ	1/30/04
3	CONST. PLANS	DBG	5/05/04

WARNING 0 1 2 IF THIS BAR DOES NOT MEASURE 1" THEN DRAWING IS NOT TO SCALE

U.S.D.A. FOREST SERVICE – REGION 1
BEARTOOTH RANGER DISTRICT – CUSTER NATIONAL FOREST
RECONSTRUCTION OF WEST FORK ROCK CREEK ROAD #2071
PHASE IV
CULVERT & ROAD DETAILS

● Project No. 04M551.103 ● D-4 LAYOUT ● Date MAY 2004 ● Designed LHB ● Drawn SMJ ● Checked LHB ● Approved GCU

HKM Engineering Inc.
601 Nikles Drive
Suite 2
Bozeman, Montana 59715
(406) 586-8834, FAX (406) 586-1730

Sheet No. D–9

F:\1-06148-USFS W FORK ROCK CREEK\CADD-06148\M551104\SHEETS\DET-SHEETS.dwg 2/2/2007 10:02:00 AM MST

Copyright © 2004 HKM Engineering Inc., All Rights Reserved.

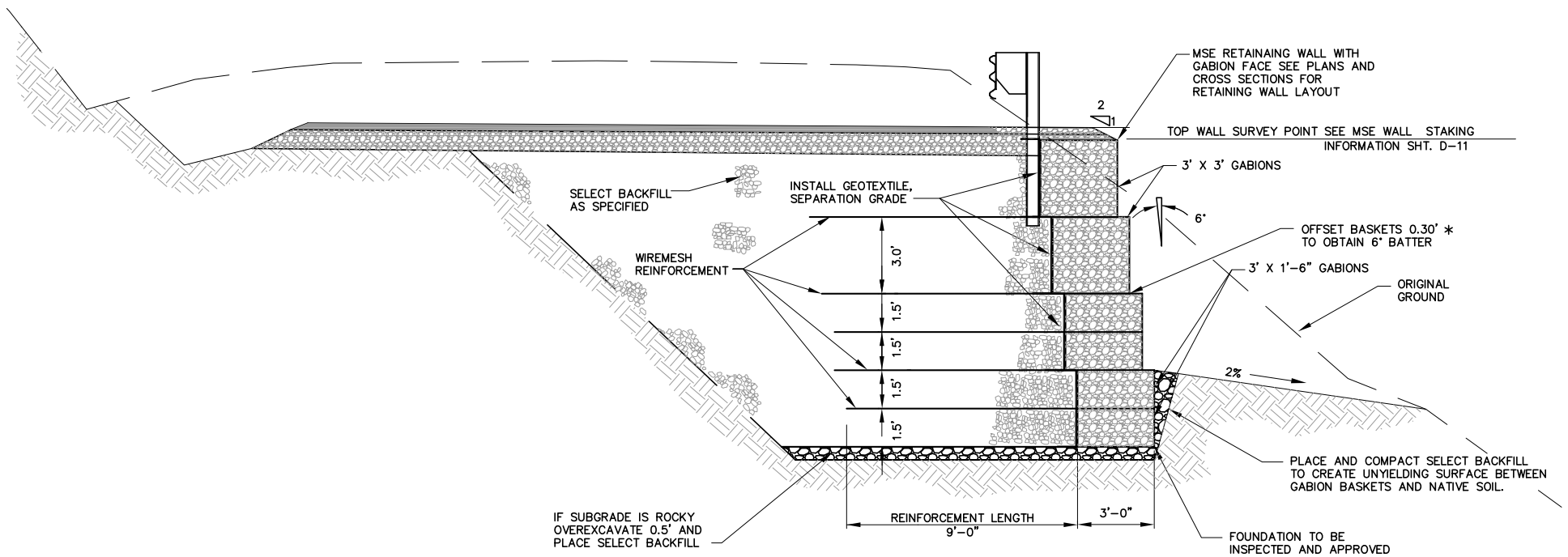

DETAIL – MSE RETAINING WALL WITH GABION FACE

SCALE: NONE

GENERAL NOTES:

* CONTRACTOR TO ENSURE OUTSIDE TOP OF WALL 18' FROM CENTERLINE AND HAS 6" BATTER TO TOE – VERIFY HORIZONTAL BASKET OFFSETS AND TOE LOCATIONS.

MATERIALS AND CONSTRUCTION OF GABION FACED STRUCTURES SHALL BE IN ACCORDANCE WITH THE STANDARD SPECIFICATIONS AND MANUFACTURER'S RECOMMENDATION.

TWO MANDATORY SITE VISITS ARE REQUIRED BY GABION WALL SYSTEM MANUFACTURER'S REPRESENTATIVE TO ASSIST CONTRACTOR WITH INITIAL GABION BASKET CONSTRUCTION. ONE VISIT AT PROJECT STARTUP AND ONE AT 40% COMPLETION.

GABION BASKETS SHALL BE CONSTRUCTED USING TWISTED WIRE MESH. TWISTED WIRE MESH BASKETS SHALL BE POLYVINYL CHLORIDE COATED (PVC). WELDED WIRE MESH BASKETS SHALL NOT BE ALLOWED.

MATERIAL USED TO FILL THE GABIONS SHALL BE HARD, DURABLE, ANGULAR OR SUBROUNDED ROCK.

ROCK MAY BE PLACED MECHANICALLY PROVIDED CARE IS TAKEN TO ENSURE THAT IT IS TIGHTLY PACKED WITH A MINIMUM OF VOIDS. FOR EXPOSED FACES, HAND LABOR SHALL BE USED TO KEEP THE MESH VERTICAL, PREVENT BULGING, AND TO PRODUCE AN ATTRACTIVE APPEARANCE.

ALL GABION WALLS SHALL BE PLACED ON A FOUNDATION OF SUITABLE MATERIAL. REMOVE AND REPLACE UNSUITABLE MATERIAL WITH A MINIMUM OF 6 INCHES OF SELECT BACKFILL. COMPACT BACKFILL MATERIAL AT AN OPTIMUM MOISTURE CONTENT WITH A VIBRATORY COMPACTOR. COMPACT TO 95% OF MAXIMUM DRY DENSITY ACCORDING TO ASSHTO T99.

BACKFILL BEHIND THE GABION STRUCTURE CONCURRENTLY WITH THE CELL-FILLING OPERATION.

AG-0355-S-09-0004

MSE WALL SCHEDULE

*STATION	WALL HEIGHT (ft)	
	END	*BEGIN*
444+00	FILL	12.0'
446+00	12.0'	FILL

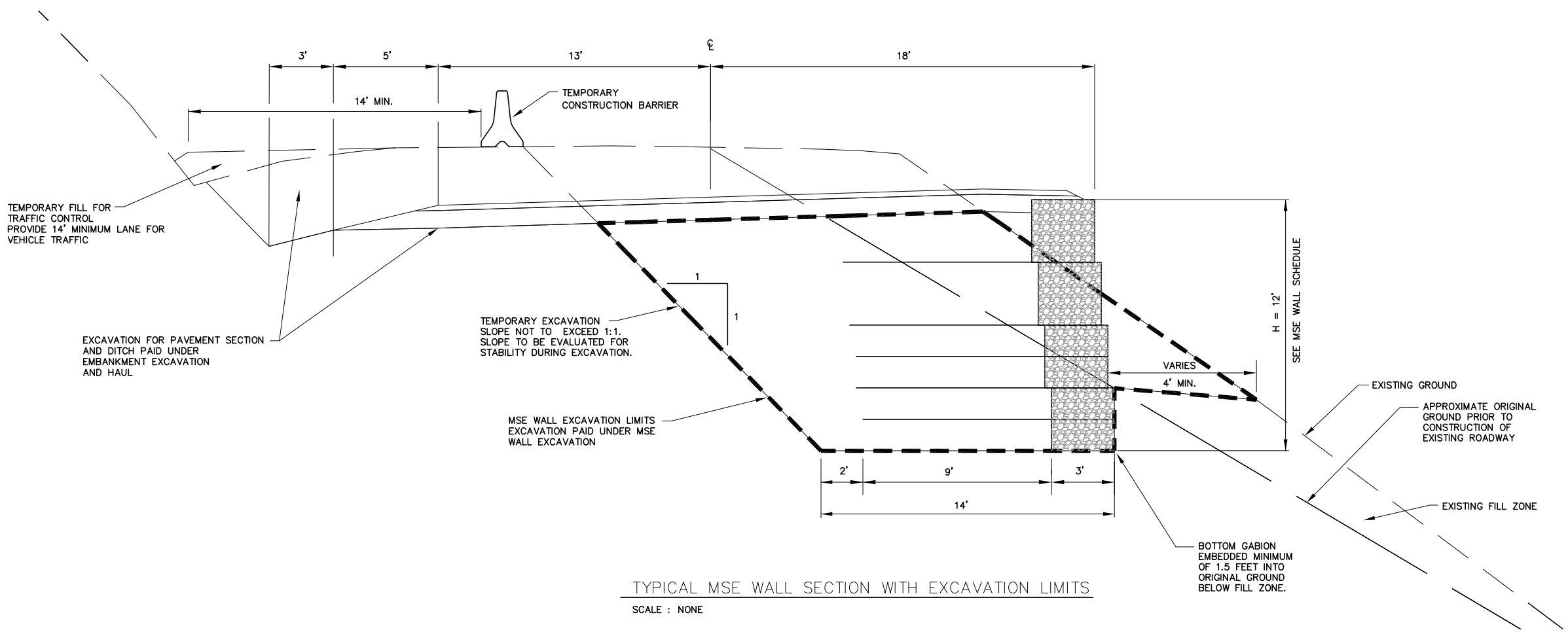

TYPICAL MSE WALL SECTION WITH EXCAVATION LIMITS

SCALE : NONE

No.	Revision	By	Date
1	50% SUBMITTAL	WBL	6/23/06
2	95% SUBMITTAL	WBL	8/31/06
3	CONST. PLANS	WBL	11/10/06

WARNING 0 1 2 IF THIS BAR DOES NOT MEASURE 1" THEN DRAWING IS NOT TO SCALE

U.S.D.A. FOREST SERVICE – REGION 1
BEARTOOTH RANGER DISTRICT – CUSTER NATIONAL FOREST
RECONSTRUCTION OF WEST FORK ROCK CREEK ROAD #2071
PHASE IV
MSE WALL DETAILS

GREAT WEST ENGINEERING
2030 11th AVENUE
HELENA, MT 59601
(406) 449-8627, FAX (406) 449-8631

Sheet No.
D-10

F:\1-06148-USFS W FORK ROCK CREEK\CADD-06148\M551104\SHEETS\DET-SHEETS.dwg 2/2/2007 10:02:00 AM MST

AG-0355-S-09-0004

MSE WALL STAKING INFORMATION

* STATION	WALL HEIGHT (ft)		OFFSET FROM CENTERLINE TO OUTSIDE TOP OF WALL (ft) (TOP WALL SURVEY POINT)	BATTER (degrees)	ELEVATION AT OUTSIDE TOP OF WALL (ft)
	END	*BEGIN*			
444+00	FILL	12.0'	18.0'	6	6539.3
444+25			18.0'	6	6537.6
444+50			18.0'	6	6535.9
444+75			18.0'	6	6534.3
445+00			18.0'	6	6532.8
445+25			18.0'	6	6531.4
445+50			18.0'	6	6530.2
445+75			18.0'	6	6529.1
446+00	12.0'	FILL	18.0'	6	6528.0

* NOTE:

STATIONS BASED ON CENTERLINE LOCATION WALL HEIGHT BREAK STATION LOCATIONS MAY BE ADJUSTED AS NECESSARY TO ALLOW PLACEMENT OF EVEN NUMBER OF 6'LONG BASKET UNITS

No.	Revision	By	Date
1	50% SUBMITTAL	WBL	6/23/06
2	95% SUBMITTAL	WBL	8/31/06
3	CONST. PLANS	WBL	11/10/06

WARNING 0 1 2 IF THIS BAR DOES NOT MEASURE 1" THEN DRAWING IS NOT TO SCALE

U.S.D.A. FOREST SERVICE – REGION 1
BEARTOOTH RANGER DISTRICT – CUSTER NATIONAL FOREST
RECONSTRUCTION OF WEST FORK ROCK CREEK ROAD #2071
PHASE IV
MSE WALL STAKING DETAILS

GREAT WEST ENGINEERING
2030 11th AVENUE
HELENA, MT 59601
(406) 449-8627, FAX (406) 449-8631

Sheet No.
D–11

F:\1-06148-USFS W FORK ROCK CREEK\CADD-06148\M551104\SHEETS\DET-SHEETS.dwg 2/2/2007 10:02:00 AM MST

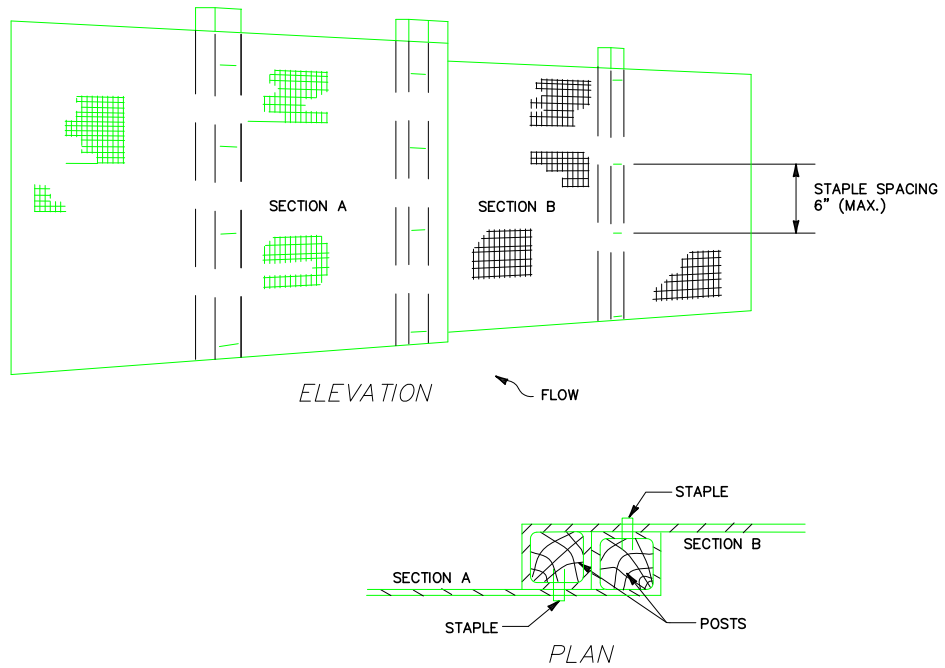

JOINING TWO ADJACENT SILT FENCE SECTIONS

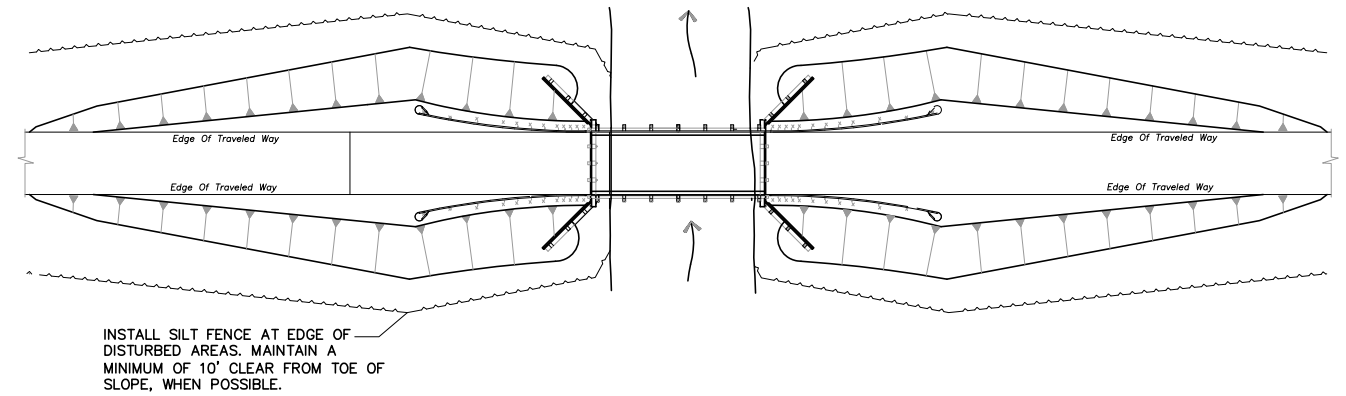

LOCATION OF SILT FENCE AT BRIDGE AND CULVERTS IN LIVE STREAMS

AG-0355-S-09-0004

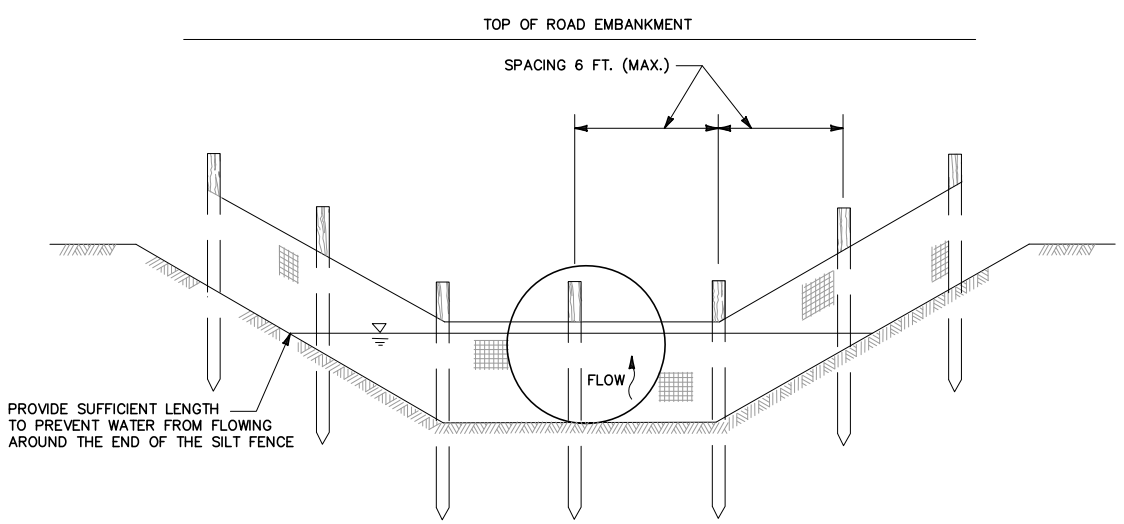

SILT FENCE AT A PIPE OUTLET

PLACE AT ALL CULVERT OUTLETS

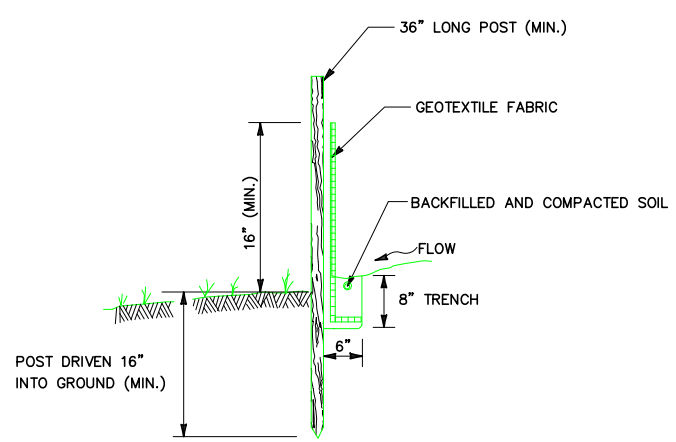

POST AND FABRIC INSTALLATION DETAIL

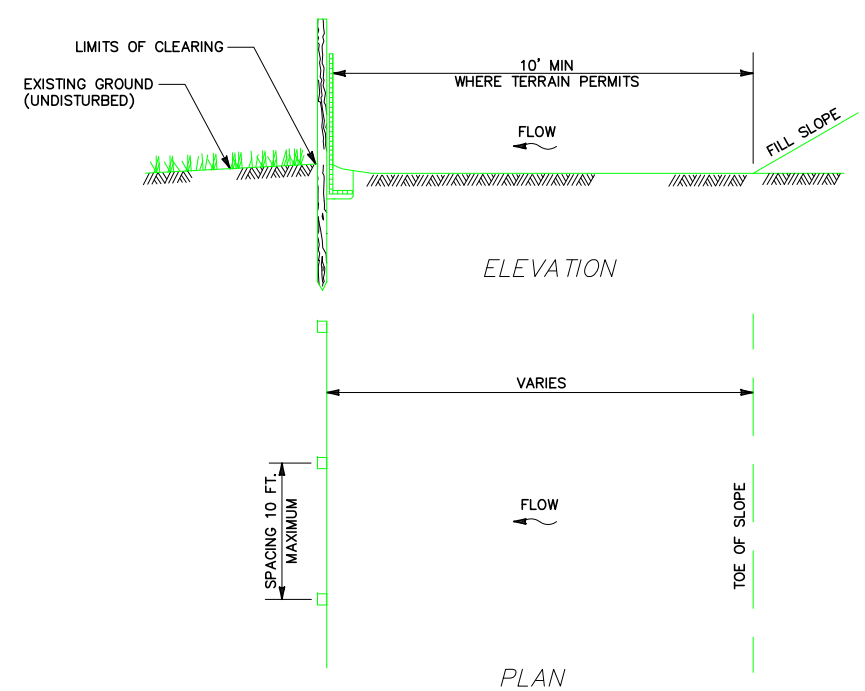

SILT FENCE INSTALLATION AT TOE OF FILL

● Project No. 04M551.103 ● D-2 LAYOUT ● Date MAY 2004 ● Designed LHB ● Drawn SMJ ● Checked LHB ● Approved GCU

No.	Revision	By	Date
1	50% SUBMITTAL	RDH	12/1/03
2	95% SUBMITTAL	SMJ	1/30/04
3	CONST. PLANS	SMJ	5/07/04

WARNING
0 1 2
IF THIS BAR DOES NOT MEASURE 1" THEN DRAWING IS NOT TO SCALE

U.S.D.A. FOREST SERVICE – REGION 1
BEARTOOTH RANGER DISTRICT – CUSTER NATIONAL FOREST
RECONSTRUCTION OF WEST FORK ROCK CREEK ROAD #2071
PHASE IV
SILT FENCE DETAILS

HKM Engineering Inc.
601 Nikles Drive
Suite 2
Bozeman, Montana 59715
(406) 586-8834, FAX (406) 586-1730

Sheet No.
D–12

F:\1-06148-USFS W FORK ROCK CREEK\CADD-06148\M551104\SHEETS\DET-SHEETS.dwg 2/2/2007 10:02:00 AM MST

Copyright © 2004 HKM Engineering Inc., All Rights Reserved.

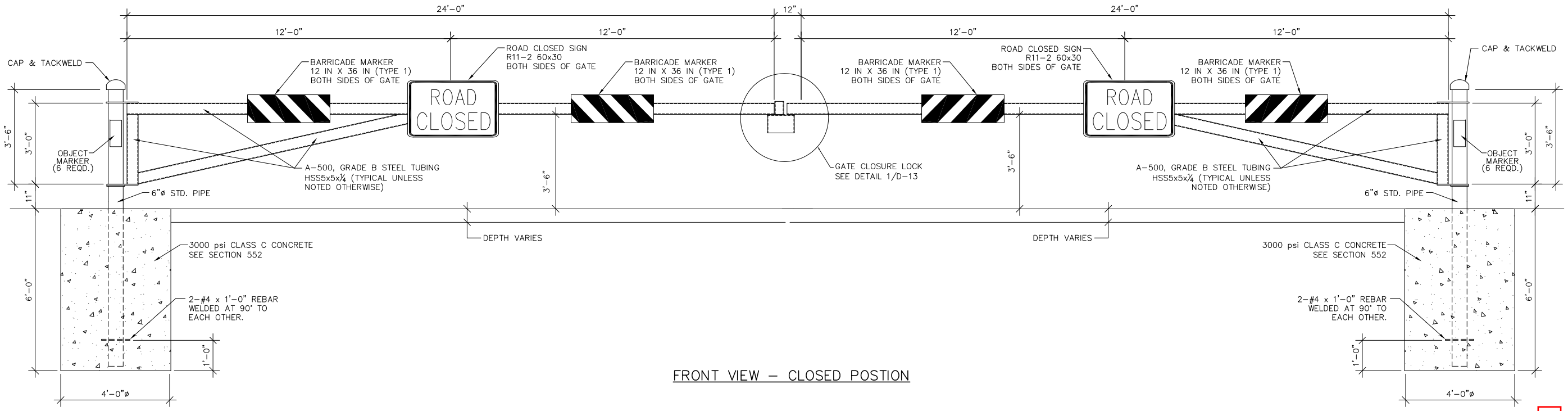

FRONT VIEW – CLOSED POSTION

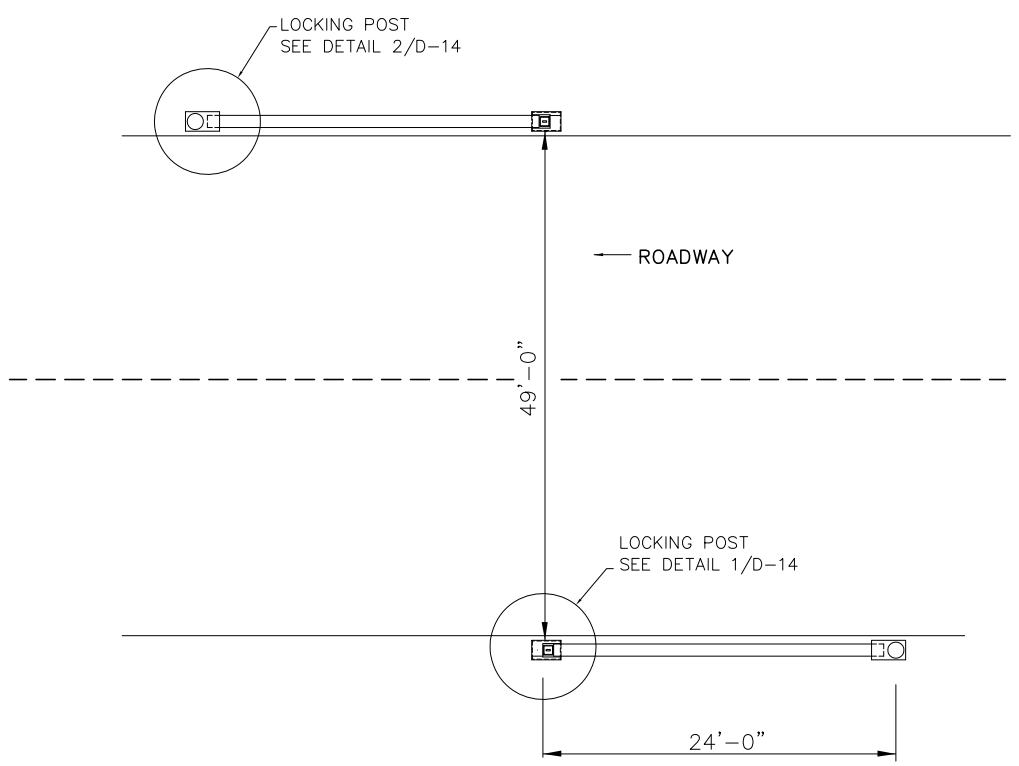

PLAN VIEW – OPEN POSTION

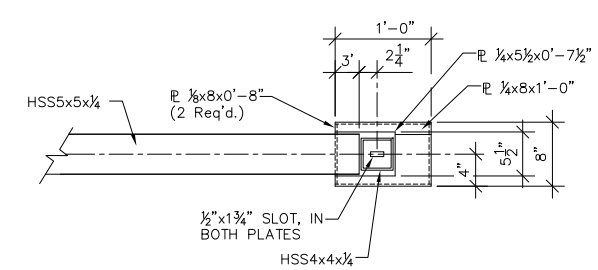

PARTIAL PLAN VIEW

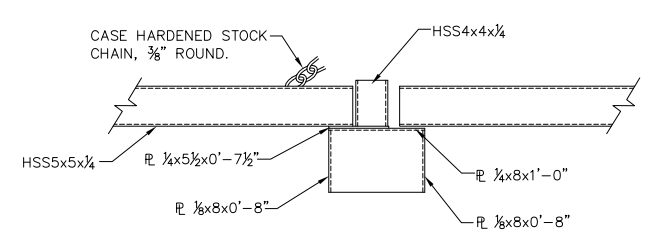

PARTIAL ELEVATION

1 / D-13 GATE CLOSURE LOCK

NOTES

1. EXTERIOR ENAMEL SHALL BE TYPE 1, DARK GREEN; UNLESS OTHERWISE APPROVED BY THE ENGINEER.
2. BARRICADE MARKERS SHALL MEET MUTCD REQUIREMENTS FOR TYPE 1. COLOR – RED & WHITE. PLACE BARRICADE MARKERS ON BOTH SIDES OF GATE. (8 REQUIRED)
3. OBJECT MARKERS SHALL MEET MUTCD REQUIREMENTS FOR TYPE 2. PLACE OBJECT MARKERS ON BOTH SIDES OF PIVOT POSTS AND TRAFFIC SIDE OF LOCKING POSTS. (6 REQUIRED)
4. ROAD CLOSED SIGNS SHALL MEET MUTCD REQUIREMENTS FOR R11-2. PLACE ROAD CLOSED SIGNS ON BOTH SIDES OF GATE. (4 REQUIRED)
5. ALL WELDS REQUIRED TO MANUFACTURE GATE, UNLESS OTHERWISE SHOWN, SHALL BE FILLET AND SHALL BE OF THE SAME SIZE AS THE THICKNESS OF THE SMALLER OF THE TWO PIECES BEING JOINED.

FABRICATOR TO CONFIRM ADEQUATE CLEARANCE TOLERANCES FOR ADJACENT GATE COMPONENTS

AG-0355-S-09-0004

No.	Revision	By	Date
1	50% SUBMITTAL	RDH	12/1/03
2	95% SUBMITTAL	SMJ	1/30/04
3	CONST. PLANS	SMJ	2/29/04

WARNING
0 ½ 1
IF THIS BAR DOES NOT MEASURE 1" THEN DRAWING IS NOT TO SCALE

U.S.D.A. FOREST SERVICE – REGION 1
BEARTOOTH RANGER DISTRICT – CUSTER NATIONAL FOREST
RECONSTRUCTION OF WEST FORK ROCK CREEK ROAD #2071
PHASE IV
GATE DETAILS

● Project No. Q4M551.103 ● D-2 LAYOUT ● Date MAR. 2004 ● Designed LHB ● Drawn DNM ● Checked LHB ● Approved

HKM Engineering Inc.
601 Nikles Drive
Suite 2
Bozeman, Montana 59715
(406) 586-8834, FAX (406) 586-1730

Sheet No.
D-13

F:\1-06148-USFS W FORK ROCK CREEK\CADD-06148\M551104\SHEET\SHEET D-13&14.dwg 1/9/2007 11:36:53 AM MST

Copyright @ 2004 HKM Engineering Inc., All Rights Reserved.

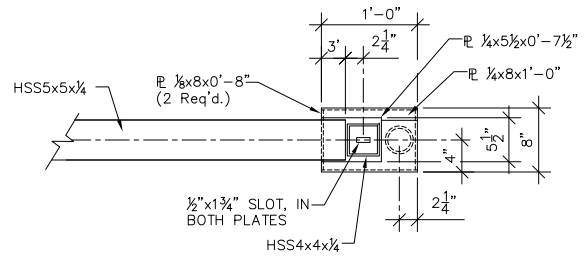

PARTIAL PLAN VIEW

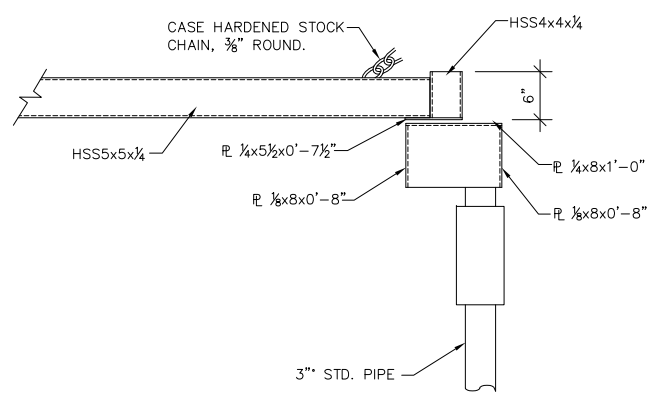

PARTIAL ELEVATION

1 D-14 LOCKING POST DETAIL

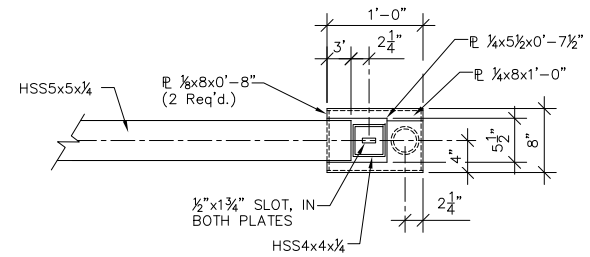

PARTIAL PLAN VIEW

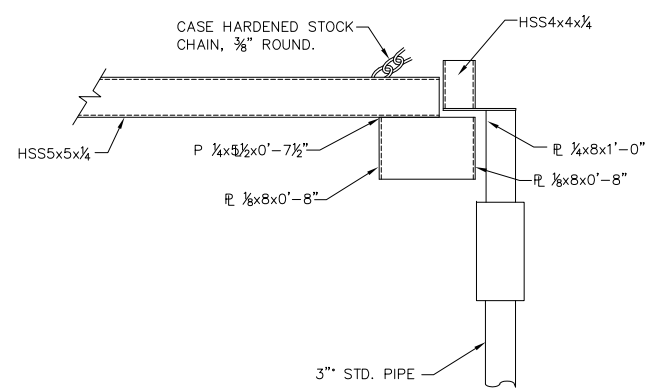

PARTIAL ELEVATION

2 D-14 LOCKING POST DETAIL

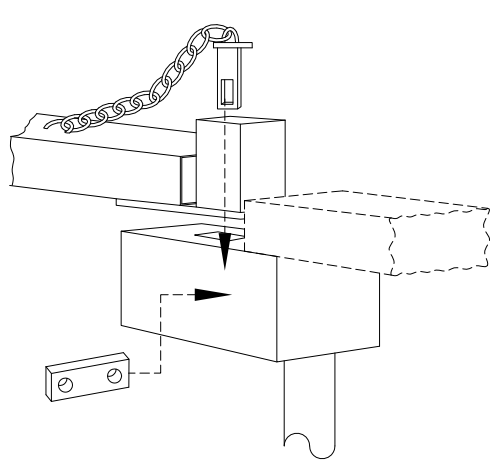

PERSPECTIVE VIEW
(LOCKING ASSEMBLY)

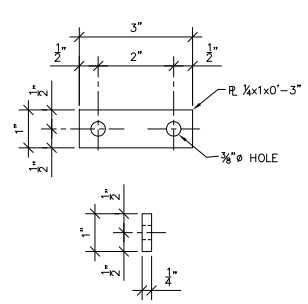

LOCK PIN
DETAIL

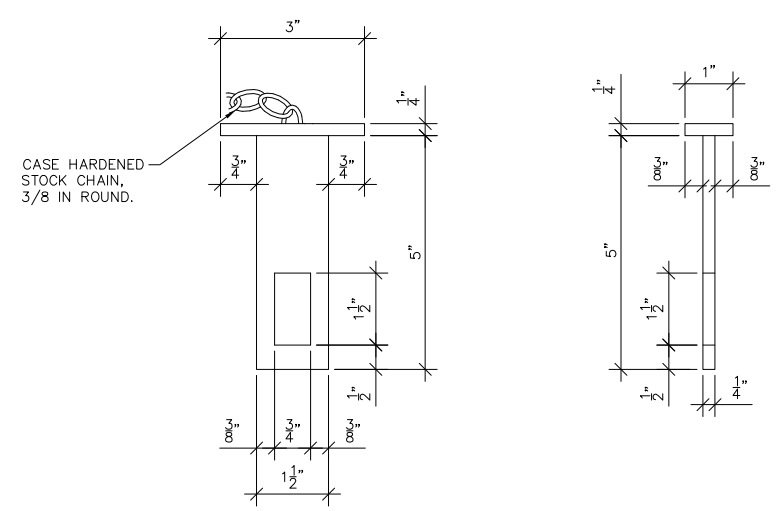

MASTER PIN DETAIL

AG-0355-S-09-0004

No.	Revision	By	Date
1	50% SUBMITTAL	RDH	12/1/03
2	95% SUBMITTAL	SMJ	1/30/04
3	CONST. PLANS	SMJ	2/29/04

WARNING
0 1
IF THIS BAR DOES NOT MEASURE 1" THEN DRAWING IS NOT TO SCALE

U.S.D.A. FOREST SERVICE – REGION 1
BEARTOOTH RANGER DISTRICT – CUSTER NATIONAL FOREST
RECONSTRUCTION OF WEST FORK ROCK CREEK ROAD #2071
PHASE IV
GATE DETAILS

● Project No. 04M551.103 ● D-2 LAYOUT ● Date MAR. 2004 ● Designed LHB ● Drawn DNM ● Checked LHB ● Approved

HKM Engineering Inc.
601 Nikles Drive
Suite 2
Bozeman, Montana 59715
(406) 586-8834, FAX (406) 586-1730

Sheet No.
D-14

F:\1-06148-USFS W FORK ROCK CREEK\CADD-06148\M551104\SHEETS\SHEET D-13&14.dwg 1/9/2007 11:36:53 AM MST

Copyright © 2004 HKM Engineering Inc., All Rights Reserved.

AG-0355-S-09-0004

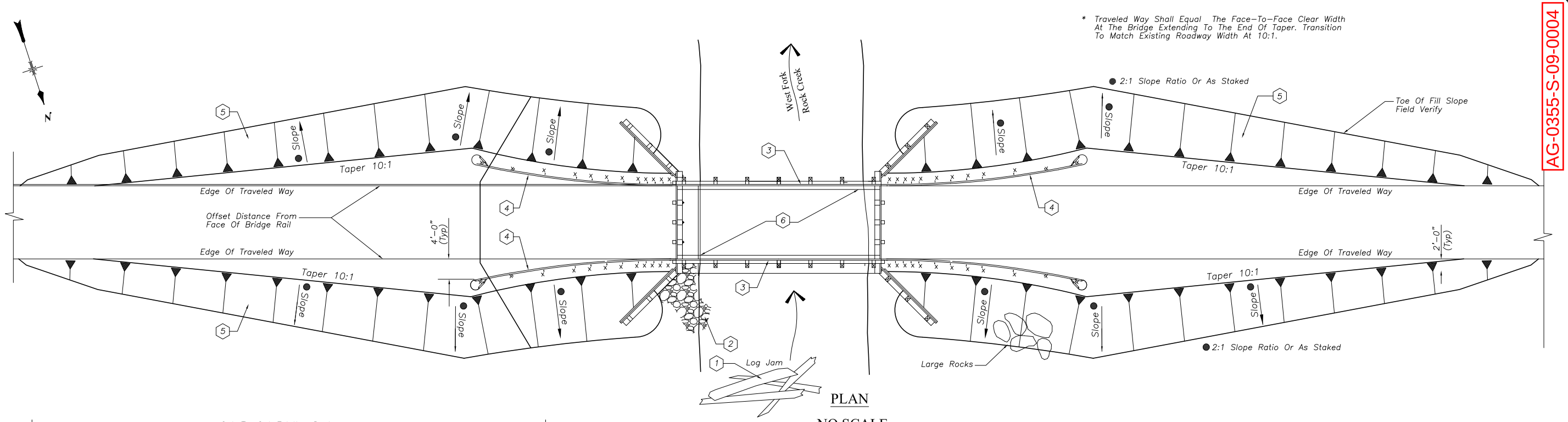

PLAN

NO SCALE

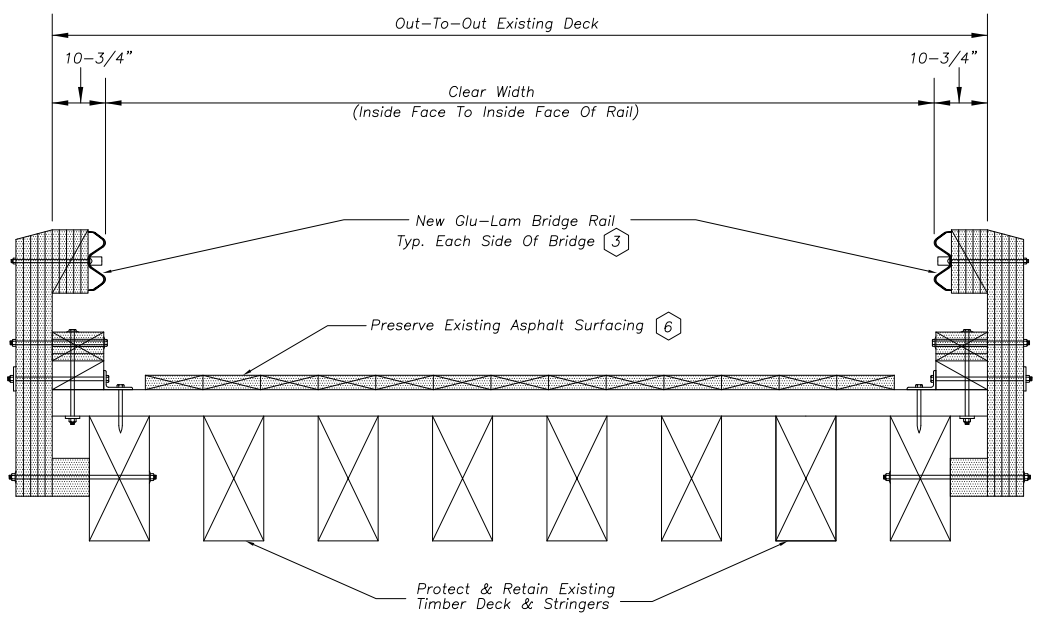

TYPICAL DECK SECTION

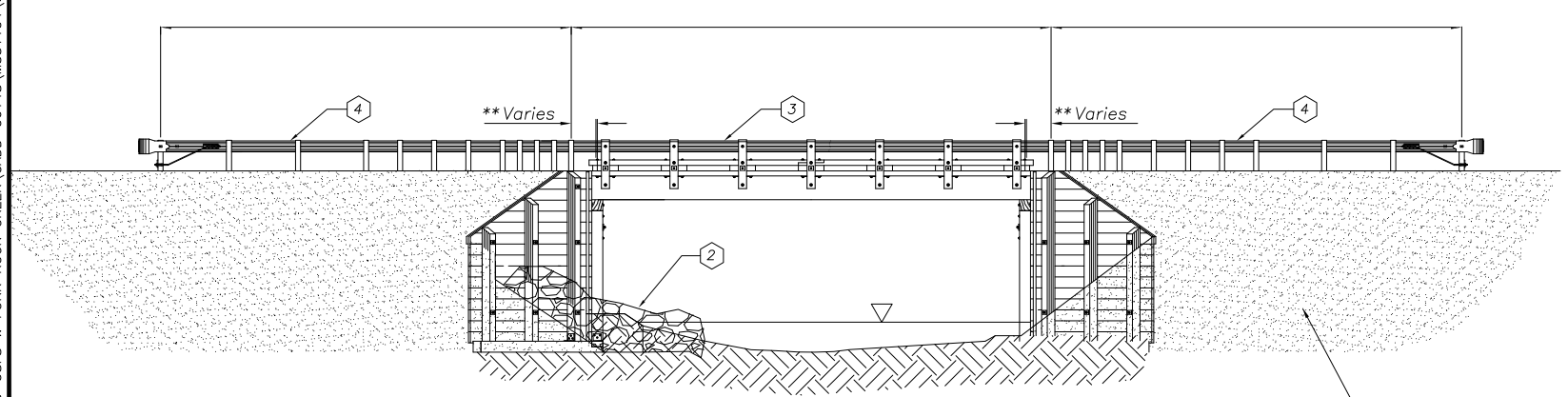

ELEVATION

LOOKING DOWNSTREAM

WORK ITEMS:

1. REMOVE DEBRIS
   Remove flood debris (trees,etc.) upstream from bridge.
2. REPAIR SCOUR HOLE
   Fill scour hole and construct native rock weir to redirect flow away from abutment. Make use of existing large rocks in the streambed and adjacent to the abutment. Place native rock 18–24 inches in diameter to construct a weir, or dike between the existing rocks. Do not use rock from the streambed to construct this weir.
3. REMOVE AND REPLACE EXISTING TIMBER BRIDGE RAIL
   Refer to Standard Drawing No. R1912 for details. Install an extra 2 inch thick plate under the curb to compensate for the existing asphalt overlay and achieve a 12 inch height measured from the driving surface.
4. INSTALL STANDARD BRIDGE W–BEAM APPROACH GUARDRAIL
   Refer to Standard Drawing No. R1902 for details.
5. CONSTRUCT SLIVER FILL EMBANKMENT
   Construct Sliver Fill Embankment as required for shoulder widening to accommodate new guardrail. Refer to Standard Drawing No. R1903 for details.
6. PRESERVE EXISTING ASPHALT SURFACE
   Do not disturb the existing bridge surfacing.
7. Submit a SOIL EROSION AND POLLUTION CONTROL PLAN to the Contracting Officer (C.O.) and have it approved prior to beginning any work.

TREATED TIMBER BRIDGE REPAIRS
BRIDGE NO. 2071-06.80 STA 333+49
GENERAL LAYOUT

Date: _____

Approved: _____
Forest Engineer

SHEET 1 Of 1

Copyright © 2004 HKM Engineering Inc., All Rights Reserved.

No.	Revision	By	Date

WARNING
0 1 2
IF THIS BAR DOES NOT MEASURE 1" THEN DRAWING IS NOT TO SCALE

U.S.D.A. FOREST SERVICE – REGION1
BEARTOOTH RANGER DISTRICT – CUSTER NATIONAL FOREST
RECONSTRUCTION OF WEST FORK ROCK CREEK ROAD #2071
PHASE IV
TREATED TIMBER BRIDGE REPAIRS

● Project No. 04M551.104 ● SHEETD–10_bridge.dwg ● Date MAR. 2004 ● Designed – ● Drawn – ● Checked – ● Approved –

HKM Engineering Inc.
601 Nikles Drive
Suite 2
Bozeman, Montana 59715
(406) 586-8834, FAX (406) 586-1730

Sheet No.
D–15

F:\1–06148–USFS W FORK ROCK CREEK\CADD–06148\M551104\SHEETS\DET–BRIDGE.dwg 1/9/2007 11:33:40 AM MST

AG-0355-S-09-0004

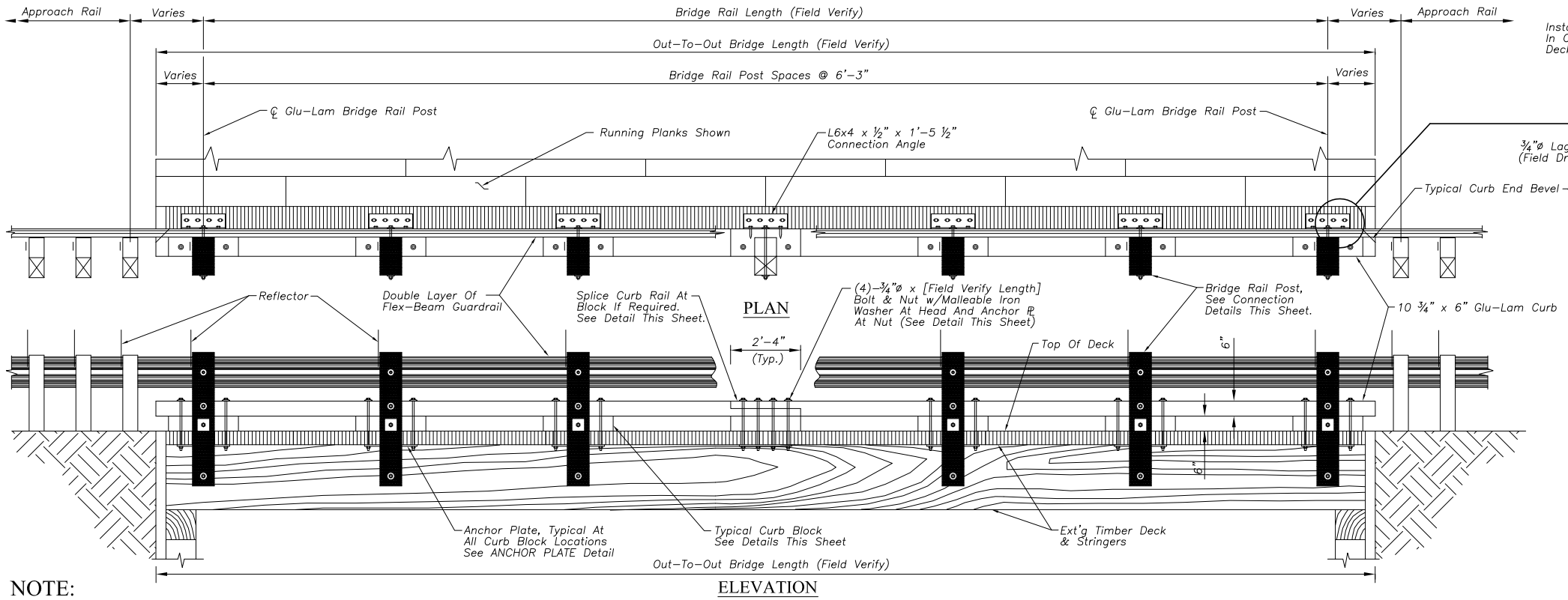

PLAN

ELEVATION

GENERAL LAYOUT

Scale: ¼" = 1'-0"

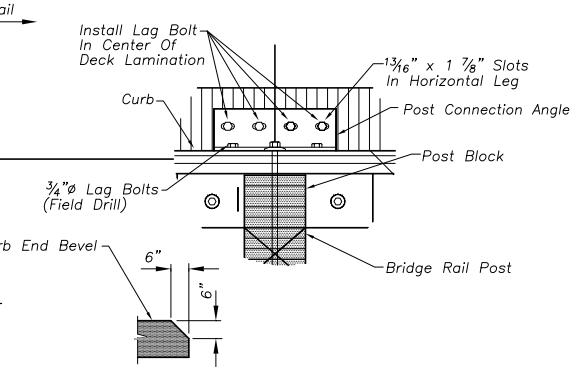

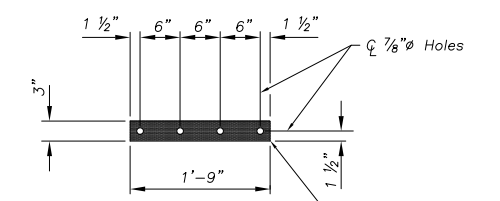

ANCHOR PLATE

Scale: ½" = 1'-0"

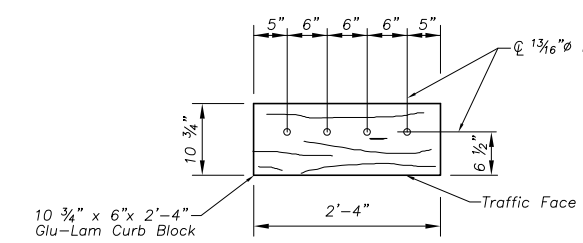

PLAN - CURB BLOCK

Scale: ½" = 1'-0"

NOTE:

CONTRACTOR SHALL FIELD VERIFY ACTUAL CONDITIONS, MEMBER DIMENSIONS, AND BOLT SPACING – BOTH NEW AND EXISTING – PRIOR TO ORDERING MATERIALS.

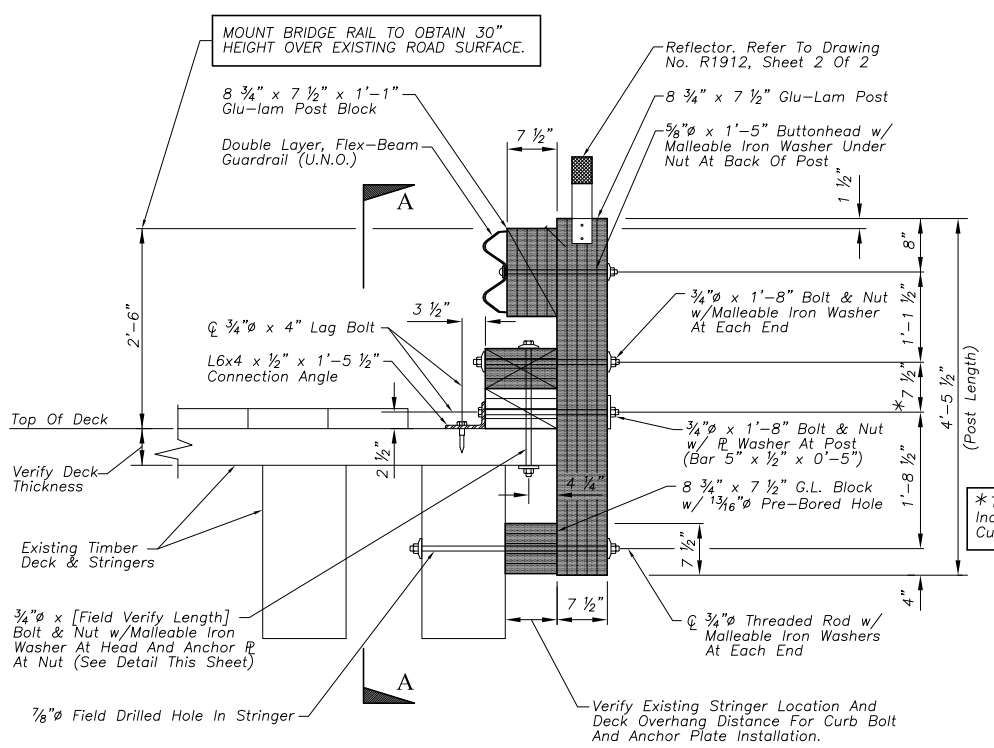

BRIDGE RAIL DETAIL

Refer To Dwg. No. R1912, Sheet 2 Of 2 For General Notes.

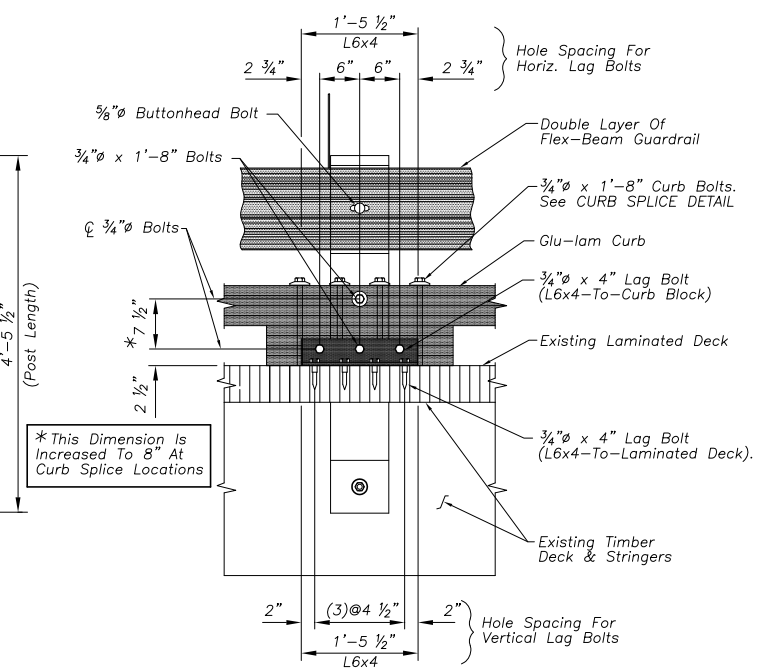

VIEW A-A

Scale: ½" = 1'-0"

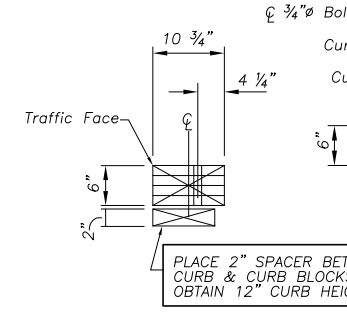

SECTION - CURB BLOCK

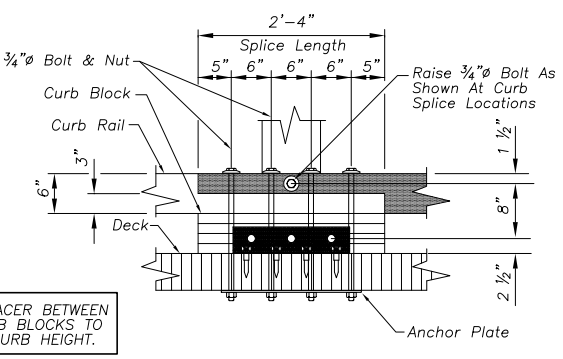

ELEVATION
CURB SPLICE DETAIL

Scale: ½" = 1'-0"

STANDARD W-BEAM BRIDGE RAIL W/ GLUED-LAMINATED POSTS

Date:

Approved:

Forest Engineer

DRAWING NO. R1912

SHEET 1 Of 2

Copyright © 2004 HKM Engineering Inc., All Rights Reserved.

No.	Revision	By	Date

WARNING 0 ½ 1 IF THIS BAR DOES NOT MEASURE 1" THEN DRAWING IS NOT TO SCALE

U.S.D.A. FOREST SERVICE – REGION1
BEARTOOTH RANGER DISTRICT – CUSTER NATIONAL FOREST
RECONSTRUCTION OF WEST FORK ROCK CREEK ROAD #2071
PHASE IV
TREATED TIMBER BRIDGE REPAIRS

HKM Engineering Inc.
601 Nikles Drive
Suite 2
Bozeman, Montana 59715
(406) 586-8834, FAX (406) 586-1730

Sheet No. D–16

● Project No. 04M551.104 ● Bridge_DET.dwg ● Date MAY 2004 ● Designed – ● Drawn DMM ● Checked LHB ● Approved GCU

F:\1-06148-USFS W FORK ROCK CREEK\CADD-06148\M551104\SHEETS\DET-BRIDGE.dwg 1/9/2007 11:33:40 AM MST

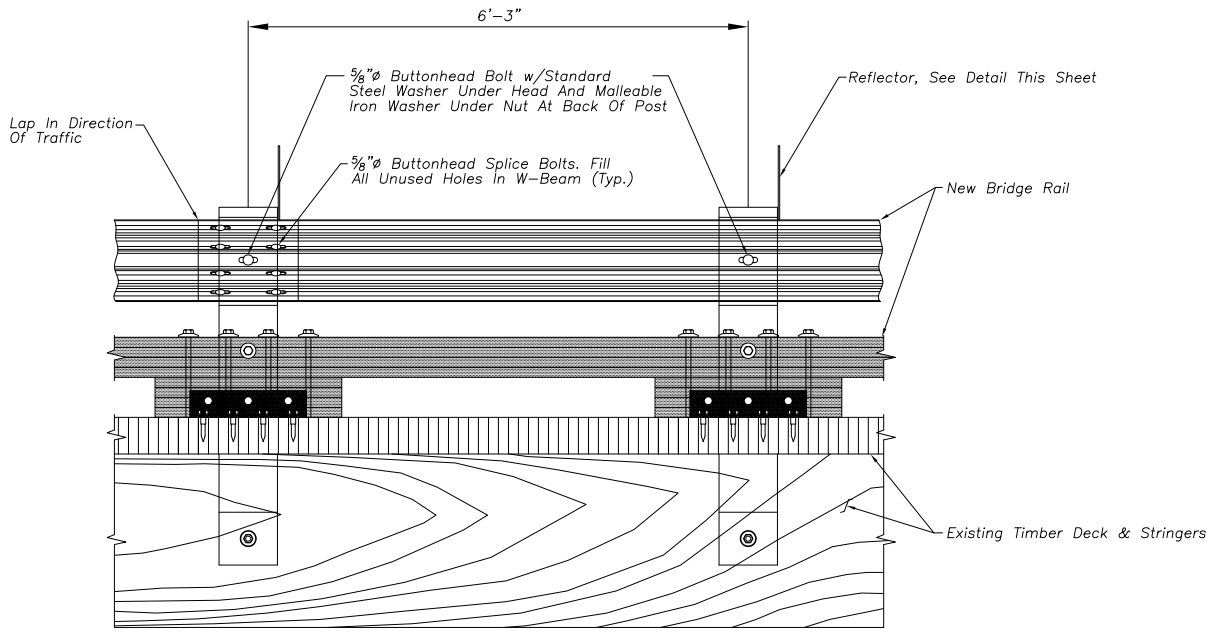

W-BEAM BRIDGE RAIL SPLICE DETAIL

Scale: ½" = 1'-0"

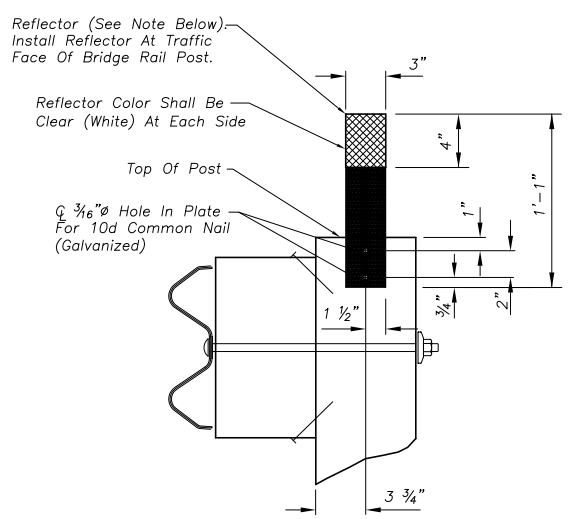

BRIDGE RAIL REFLECTORS

Scale: 1" = 1'-0"

NOTE:

Reflectors Manufactured By Roadside Safety Devices In Gilford, Montana, Or By Carsonite Will Meet The Requirements Detailed Above. Reflectors Made By Other Manufacturers May Be Submitted To The C.O. For Review.

GENERAL NOTES:

SPECIFICATIONS: Materials And Construction Of This Structure Shall Be In Accordance With The Current Adopted USDA – Forest Service Specifications For Construction Of Roads And Bridges.

GLUED-LAMINATES: Glued-Laminated Members Shall Be Of Coastal Region Douglas-Fir Conforming To The American Institute Of Timber Construction (AITC) 117-2001, Combination Symbol 3, 4, Or 5, And Shall Be Manufactured For Wet Condition Use And Industrial Appearance.

TREATMENT: After Fabrication, All Members Shall Be Incised And Pressure Treated In Accordance With AWPA C-28 (Soil Contact), Using Pentachlorophenol Meeting AWPA P-8 With Type A Solvent Meeting AWPA P-9. Treatment Will Comply With The Requirements Of The Current Edition Of WWPI's "Best Management Practices For The Use Of Treated Wood In Aquatic Environments".

FIELD TREATMENT: Copper Naphthenate (2% Solution) Shall Be Furnished For Field Treating Of Wood. All Abrasions, Field Drilled Holes, And Field Cuts –Approved By The Contracting Officer– Shall Be Carefully Trimmed And Given Three Brush Coats Of The Field Preservative Treatment Solution.

INSPECTION AND CERTIFICATION:
The Following Compliance Certificates Shall Be Furnished Upon Delivery:

A) Supplier Certification, From A WWPA Or WCLIB Approved Supplier, That All Wood Material Meet Requirements As To Species And Grade.
B) Certification Of Preservative, Penetration In Inches, And Retention In Pounds Per Cubic Foot (Assay Method) By Either A Qualified Testing And Inspection Agency Or Supplier Certification. Supplier Certification Requires Each Solid Piece To Be Stamped Or Branded With The ALSC Quality Mark.
C) Certification From A Qualified Inspection And Testing Agency Indicating Conformance Of All Glued-Laminated Members With AITC 117-2001.
D) Supplier Certification That All Treated Wood Materials Were Treated In Accordance With And Meet The Requirements Of WWPI's "Best Management Practices For The Use Of Treated Wood In Aquatic Environments".

HARDWARE AND STRUCTURAL STEEL: Steel Shapes, Plates And Bars Shall Be Fabricated From Structural Steel Conforming To AASHTO M270, Grade 36, And Need Not Be Galvanized Or Coated. All Bolts, Nuts And Washers, Except Buttonhead Bolts, Shall Conform To AASHTO M164 (ASTM A325 Or A449) And Shall Be Galvanized In Accordance With AASHTO M232 (ASTM A153). W-Beam And Associated Hardware Shall Meet AASHTO M180, Class A, And Shall Be Type 1 (Galvanized) Or Type 4 (A588). Refer To PROJECT INFORMATION On The GENERAL LAYOUT Sheet.

Use Malleable Iron Washers Against Wood, Unless Noted Otherwise.

FABRICATION: Field Verify All Member Dimensions And Bolt Spacing –New And Existing– Before Ordering Material. Submit Shop Drawings For All Treated Timber. Show All Dimensions And Fabrication Details For All Cut Or Bored Timber. All Timber Fabrication Shall Be Completed Before Treatment. Field Drilling Of Holes Shall Not Be Allowed Unless Otherwise Noted On The Drawings.

Structural Steel Shall Be Shop Fabricated. Welding Shall Conform To AWS Structural Welding Code D1.1 And Shall Be By A Certified Welder. All Steel (Except A588) Shall Be Fabricated Before Being Galvanized, Except Minor Shop Cutting. Drilling And Welding Is Permitted On Galvanized Metal, Provided These Areas Are Cleaned And Repaired With 2 Coats Of Zinc Dust-Zinc Oxide Paint Meeting Federal Specification TT-P-641 Or Military Specification MIL-P-21035.

ERECTION: No Field Cutting Or Welding Is Permitted On Galvanized Metal Unless Approved By The Contracting Officer (C.O.). All Bridge Rail Posts Shall Be Set Vertically And The Railing Erected Parallel To Grade. The Contractor Shall Furnish Galvanized Steel Shim Plates As Required To Align Railing. Fill All Unused Holes In W-Beam With Standard Buttonhead Bolts And Nuts. After Erection Is Complete, Burr Threads Of All Rods And Bolts To Prevent Backing Off Of Nuts. All Damaged Galvanized Surfaces Shall Be Repaired With 2 Coats Of Zinc Paint As Specified In The Fabrication Note Above.

All Rail Splices Shall Occur At Posts And There Shall Be No More Than One Layer Of W-Beam Rail Spliced At Each Post.

LAG BOLT INSTALLATION: Prebore Lag Bolt Holes Using Two Diameters, One For The Shank And One For The Threads. The Lead Hole For The Shank Is To Be 1/16" Larger Than The Shank Diameter And Is To Be Bored To The Depth Of Penetration Of The Shank. The Lead Hole For The Threaded Portion Is To Be 70% Of The Bolt Diameter As Shown On The PLANS And Is To Be Bored At Least To The Length Of The Threads. DO NOT DRIVE LAG BOLTS WITH A HAMMER.

STANDARD W-BEAM BRIDGE RAIL W/ GLUED-LAMINATED POSTS

Date:

Approved:
Forest Engineer

DRAWING NO. R1912

SHEET 2 Of 2

Copyright © 2004 HKM Engineering Inc., All Rights Reserved.

AG-0355-S-09-0004

● Project No. Q4M551.104 ● SHEETD-10_bridge.dwg ● Date MAR. 2004 ● Designed – ● Drawn – ● Checked – ● Approved –

No.	Revision	By	Date

WARNING
0 2 1
IF THIS BAR DOES NOT MEASURE 1" THEN DRAWING IS NOT TO SCALE

U.S.D.A. FOREST SERVICE – REGION1
BEARTOOTH RANGER DISTRICT – CUSTER NATIONAL FOREST
RECONSTRUCTION OF WEST FORK ROCK CREEK ROAD #2071
PHASE IV
TREATED TIMBER BRIDGE REPAIRS

HKM Engineering Inc.
601 Nikles Drive
Suite 2
Bozeman, Montana 59715
(406) 586-8834, FAX (406) 586-1730

Sheet No.
D-17

F:\1-06148-USFS W FORK ROCK CREEK\CADD-06148\M551104\SHEETS\DET-BRIDGE.dwg 1/9/2007 11:33:40 AM MST

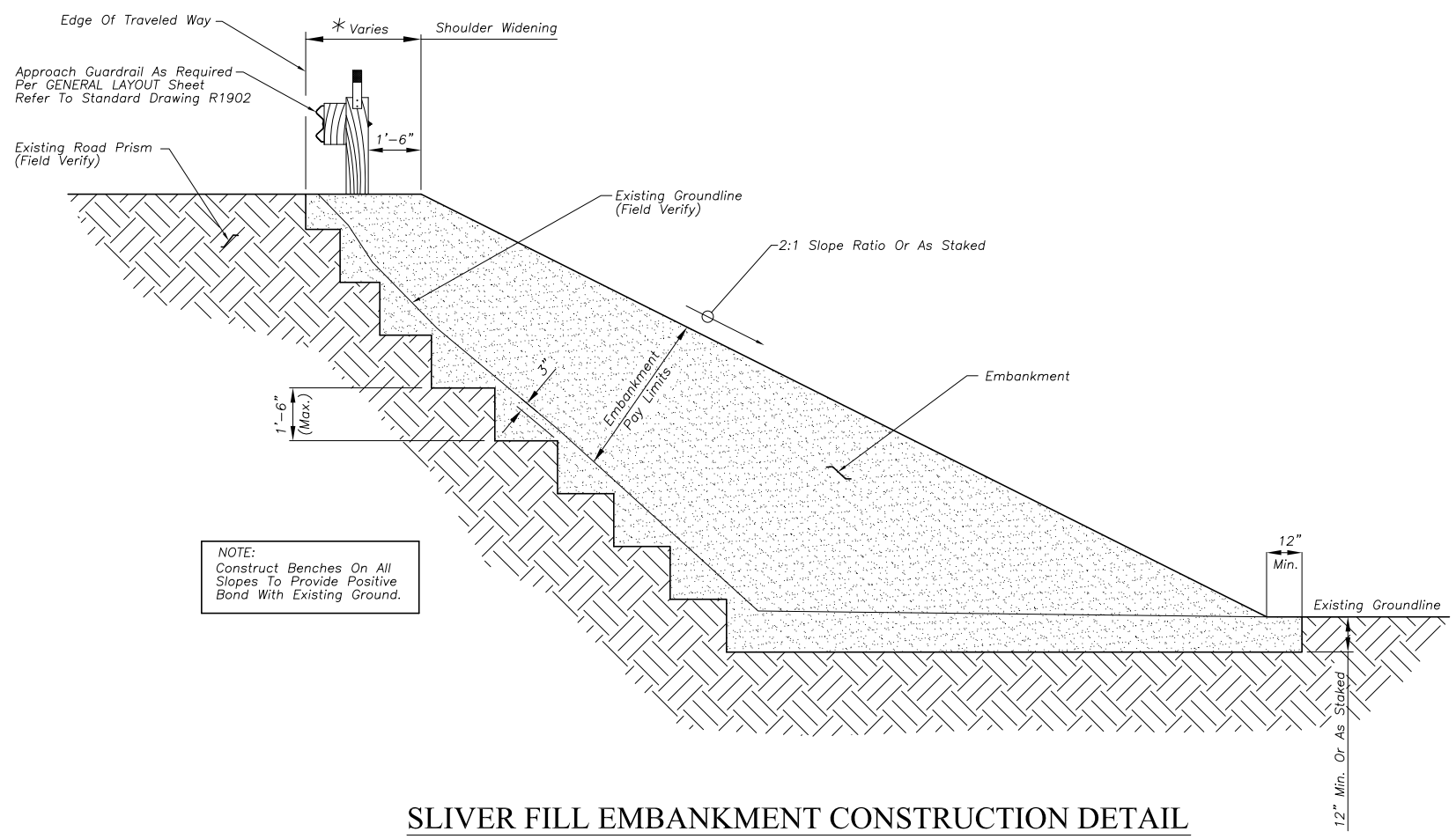

NOTE:
Construct Benches On All Slopes To Provide Positive Bond With Existing Ground.

SLIVER FILL EMBANKMENT CONSTRUCTION DETAIL

Scale: ¼" = 1'-0"

GENERAL NOTES:

SPECIFICATIONS: Construct Embankments In Accordance With The Current Adopted USDA – Forest Service Specifications.

SLIVER FILL EMBANKMENT DETAIL

Date:

Approved:

Forest Engineer

DRAWING NO. R1903

SHEET 1 Of 1

Copyright @ 2004 HKM Engineering Inc., All Rights Reserved.

AG-0355-S-09-0004

No.	Revision	By	Date

WARNING
0 1
IF THIS BAR DOES NOT MEASURE 1" THEN DRAWING IS NOT TO SCALE

U.S.D.A. FOREST SERVICE – REGION1
BEARTOOTH RANGER DISTRICT – CUSTER NATIONAL FOREST
RECONSTRUCTION OF WEST FORK ROCK CREEK ROAD #2071
PHASE IV
TREATED TIMBER BRIDGE REPAIRS

Project No. 04M551.104 ● SHEETD-10_bridge.dwg ● Date MAR. 2004 ● Designed – ● Drawn – ● Checked – ● Approved –

HKM Engineering Inc.
601 Nikles Drive
Suite 2
Bozeman, Montana 59715
(406) 586-8834, FAX (406) 586-1730

Sheet No.
D-18

F:\1-06148-USFS W FORK ROCK CREEK\CADD-06148\W551104\SHEETS\DET-BRIDGE.dwg 1/9/2007 11:33:40 AM MST

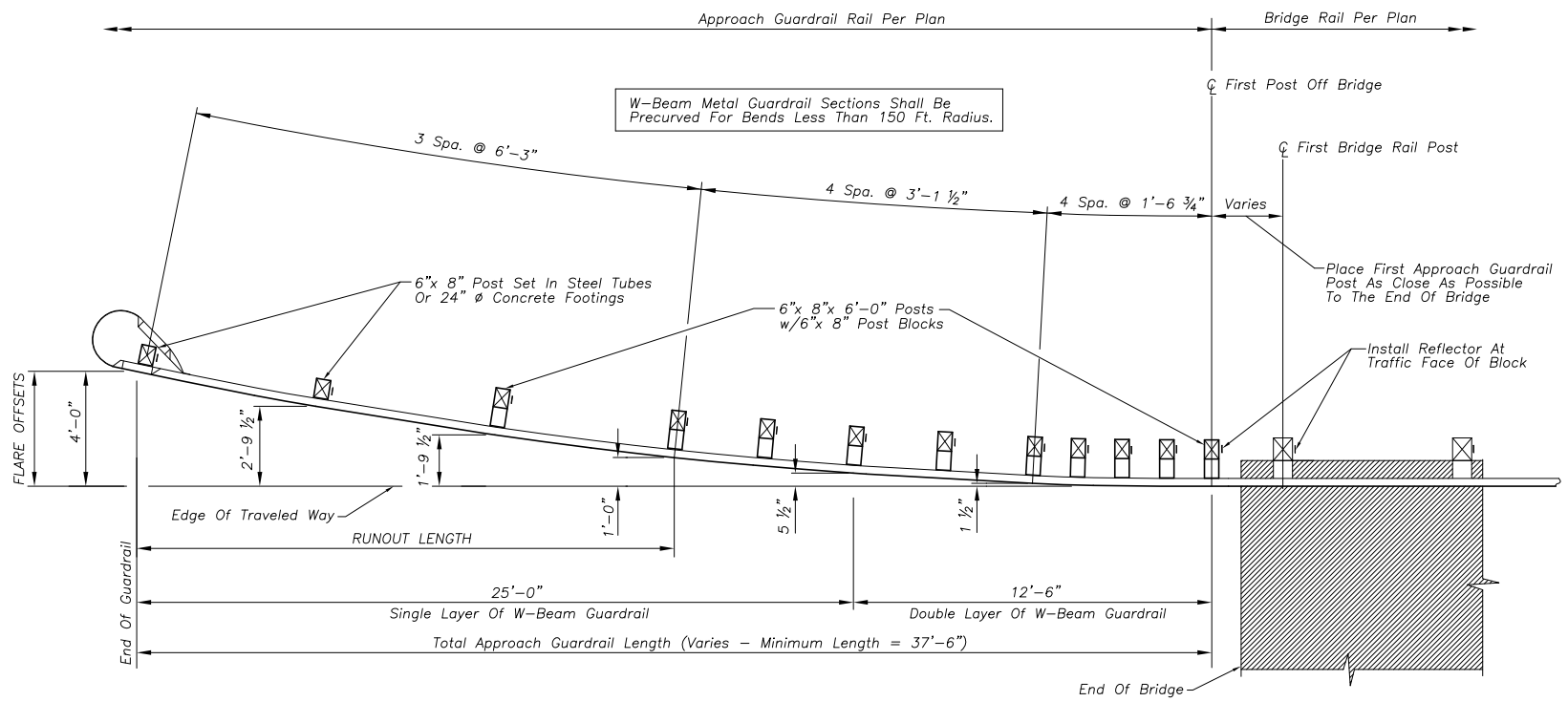

APPROACH RAIL PLAN

Minimum Total Guardrail Length Of 37'–6" Shown Above. See GENERAL LAYOUT Sheet For Total Length Of Approach Guardrail Required. Approach Guardrail Lengths Greater Than The Minimum Of 37'–6" Shall Be Multiples Of 6'–3" Added To The Approach Guardrail Runout Length. Flare Dimensions And Offsets Are Measured From The End Of Guardrail.

Scale: 3/16" = 1'–0"

GENERAL NOTES:

SPECIFICATIONS: *Materials and construction of this structure shall be in accordance with the current adopted USDA Forest Service Standard Specifications.*

MATERIALS: *Steel shapes, plates and bars shall be structural steel conforming to AASHTO M270, Grade 36, except structural tubing shall conform to ASTM A500 Grade B, or ASTM A501. If not covered by 1 inch or more of concrete, steel shape, plates and bars shall be galvanized in accordance with AASHTO M111 (ASTM A123). W–Beam guardrail and associated hardware shall meet AASHTO M180, Class A, and shall be Type 1 (Galvanized) or Type 4 (A588) per GENERAL LAYOUT Sheet. W–Beam terminal piece shall be Class B. All bolts, nuts and washers, except buttonhead bolts, shall conform to AASHTO M164 (ASTM A325 or A449) and shall be galvanized in accordance with AASHTO M232 (ASTM A153). Cable Assembly shall be galvanized and conform to AASHTO M30 (ASTM A741).*

Timbers shall be Western Wood (No. 1 Grade) conforming to the current WWPA Or WCLIB grading rules for Western Lumber.

Concrete for end anchors shall have a minimum 28 day compressive strength of 3000 psi. Welded Wire Fabric shall conform to AASHTO M55 (ASTM A185).

FABRICATION: *All lumber fabrication shall be completed before treatment. Structural steel shall be shop fabricated. Welding shall conform to AWS structural welding code D1.1 and shall be by a certified welder. All steel shall be fabricated before being galvanized, except minor shop cutting. Drilling and welding is permitted on galvanized metal, provided these areas are cleaned and repaired with 2 coats of zinc dust–zinc oxide paint meeting federal specification TT–P–641 or military specification MIL–P–21035. All rail splices shall occur at posts. Shop bend curved rail sections.*

TREATMENT: *After fabrication, all timber shall be incised and then pressure treated in accordance with AWPA C14 for Post, Guardrail, And Spacer Blocks Usage. Treatment shall comply with the requirements of the current edition of WWPA's "Best Management Practices for the use of Treated Wood in Aquatic Environments" and the supplier shall furnish, upon delivery of materials, a certificate of compliance.*

ERECTION: *No field cutting or welding is permitted on galvanized metal unless approved by the Contracting Officer. All rail posts shall be set vertically and the railing erected parallel to grade. The Contractor shall furnish galvanized steel shim plates as required to align railing. Approach guardrail post holes shall be a minimum of 18" in diameter, unless augered or driven. Bottom of excavated holes shall be thoroughly compacted and backfill shall be thoroughly tamped in 4 inch layers. Fill all unused holes in W–Beam with standard buttonhead bolts and nuts. After erection is complete, burr threads of all rods and bolts to prevent backing off of nuts. All damaged galvanized surfaces shall be repaired with 2 coats of zinc paint as specified in the fabrication note above. There shall be no more than one rail splice per post when double–layer W–Beam guardrail elements are specified.*

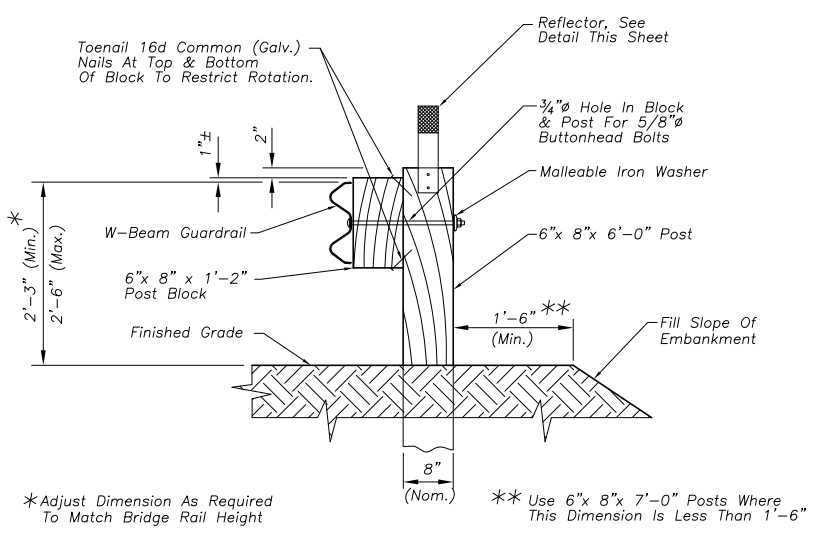

TYPICAL APPROACH GUARDRAIL CROSS SECTION

Scale: ½" = 1'–0"

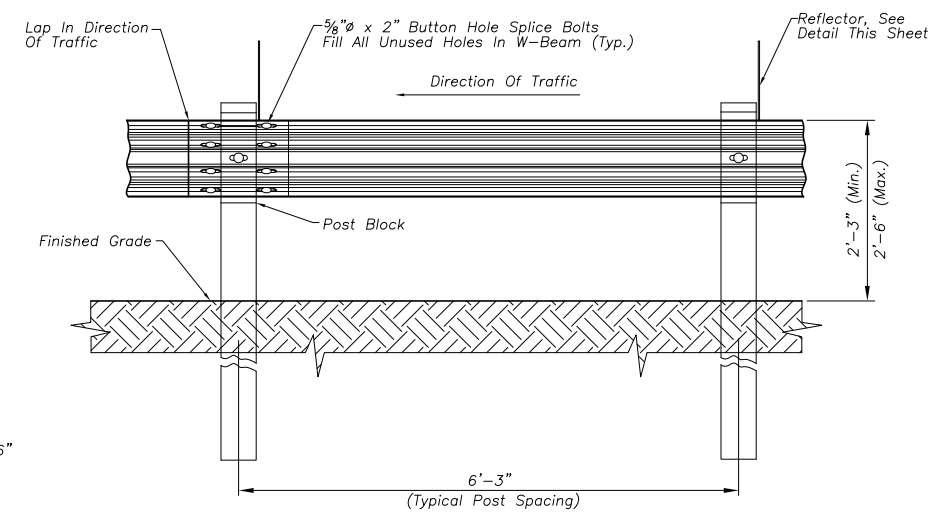

GUARDRAIL SPLICE DETAIL

Scale: ½" = 1'–0"

NOTE:

Reflectors Manufactured By Roadside Safety Devices In Gilford, Montana, Or By Carsonite Will Meet The Requirements Detailed Above. Reflectors Made By Other Manufacturers May Be Submitted To The C.O. For Review.

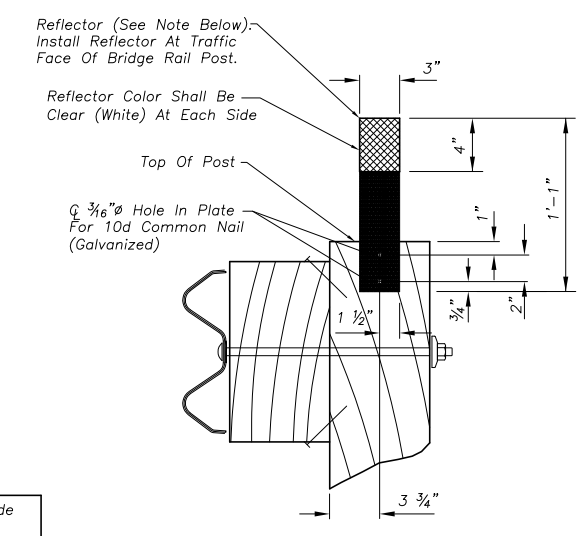

GUARDRAIL REFLECTORS

Scale: 1" = 1'–0"

STANDARD BRIDGE W-BEAM APPROACH GUARDRAIL

Date: _____

Approved: _____
Forest Engineer

DRAWING NO. R1902

SHEET 1 Of 2

Copyright @ 2004 HKM Engineering Inc., All Rights Reserved.

AG-0355-S-09-0004

No.	Revision	By	Date

WARNING
0 1 2
IF THIS BAR DOES NOT MEASURE 1" THEN DRAWING IS NOT TO SCALE

● Project No. Q4M551.104 ● SHEETD-10_bridge.dwg ● Date MAR. 2004 ● Designed – ● Drawn – ● Checked – ● Approved –

U.S.D.A. FOREST SERVICE – REGION1
BEARTOOTH RANGER DISTRICT – CUSTER NATIONAL FOREST
RECONSTRUCTION OF WEST FORK ROCK CREEK ROAD #2071
PHASE IV
TREATED TIMBER BRIDGE REPAIRS

HKM Engineering Inc.
601 Nikles Drive
Suite 2
Bozeman, Montana 59715
(406) 586-8834, FAX (406) 586-1730

Sheet No.
D–19

F:\1-06148-USFS W FORK ROCK CREEK\CADD-06148\M551104\SHEETS\DET-BRIDGE.dwg 1/9/2007 11:33:40 AM MST

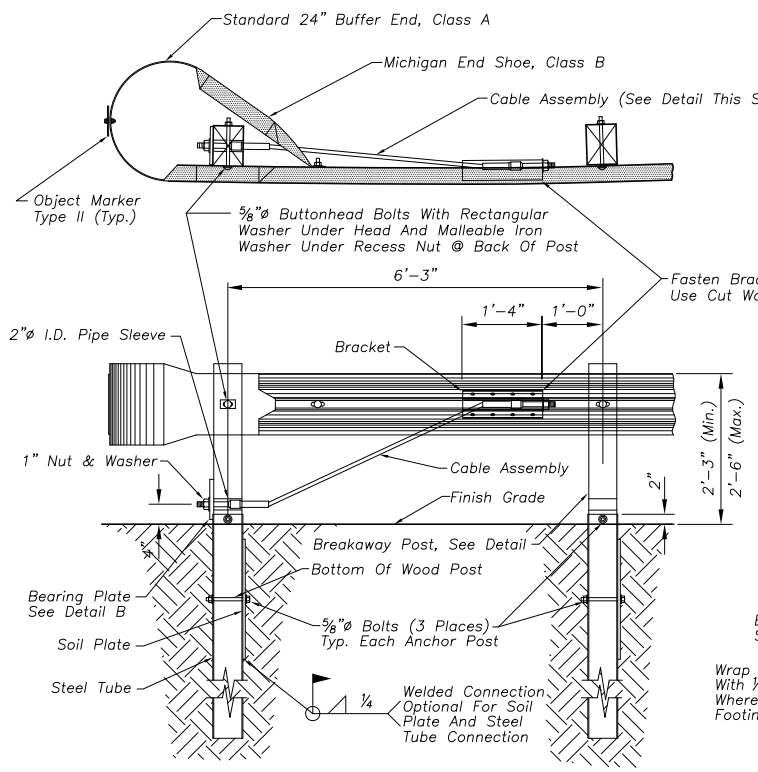

END ANCHOR DETAIL (STEEL PLATES)

Note: Soil Plate & Steel Tube Need Not Be Galvanized Scale: ⅜" = 1'-0"

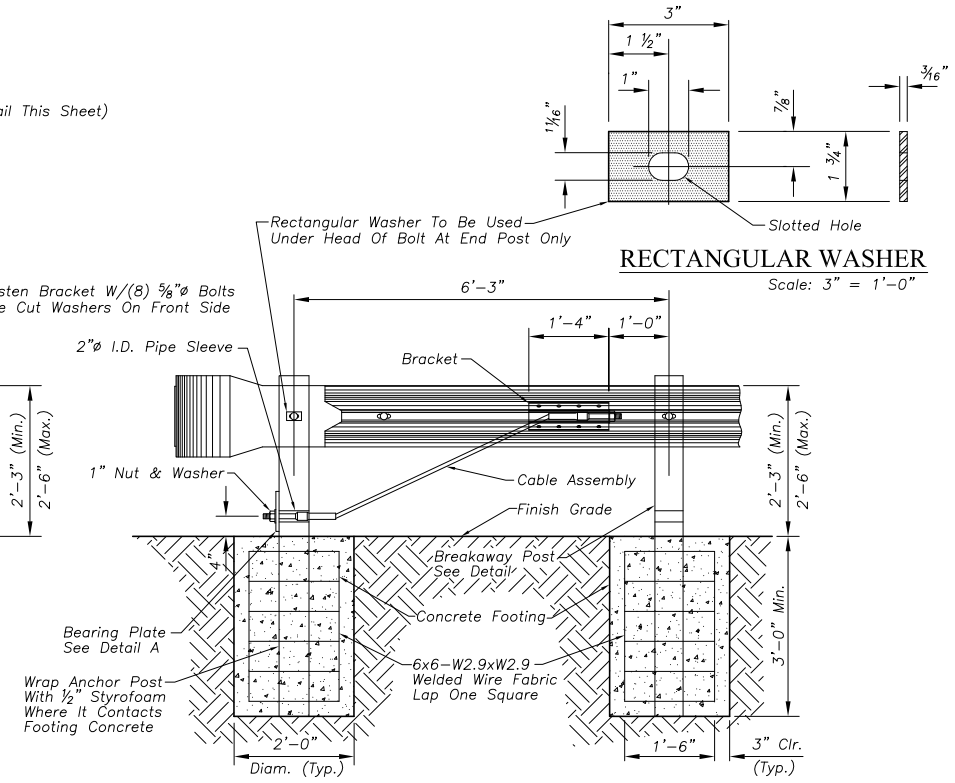

RECTANGULAR WASHER

Scale: 3" = 1'-0"

ALTERNATE END ANCHOR DETAIL (CONCRETE FOOTINGS)

Scale: ⅜" = 1'-0"

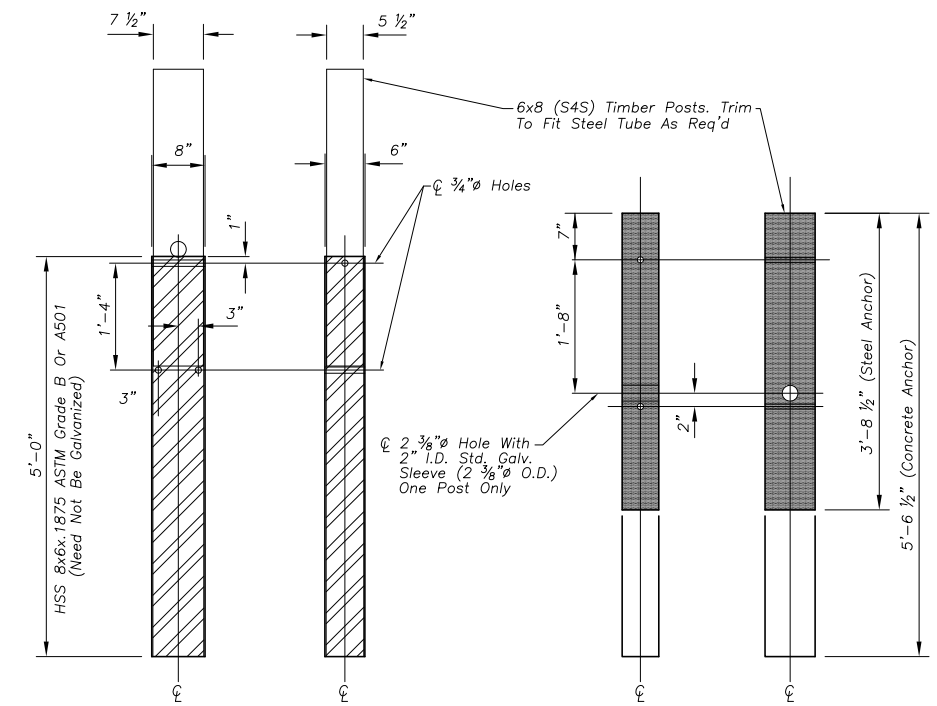

STEEL TUBE DETAIL

Scale: ½" = 1'-0"

WOOD BREAKAWAY POST

Scale: ½" = 1'-0"

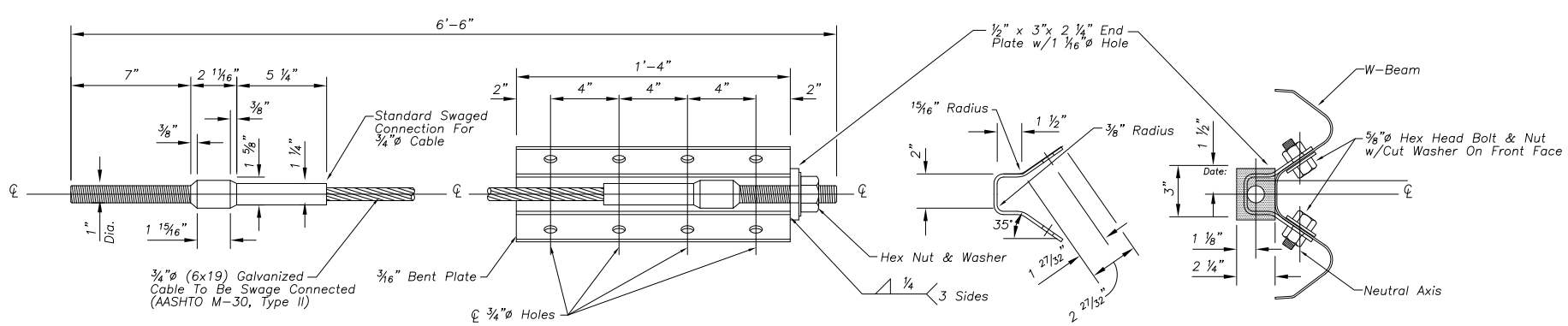

ANCHOR BRACKET AND CABLE ASSEMBLY DETAILS

TYPICAL SECTION

END VIEW

Scale: 1 ½" = 1'-0"

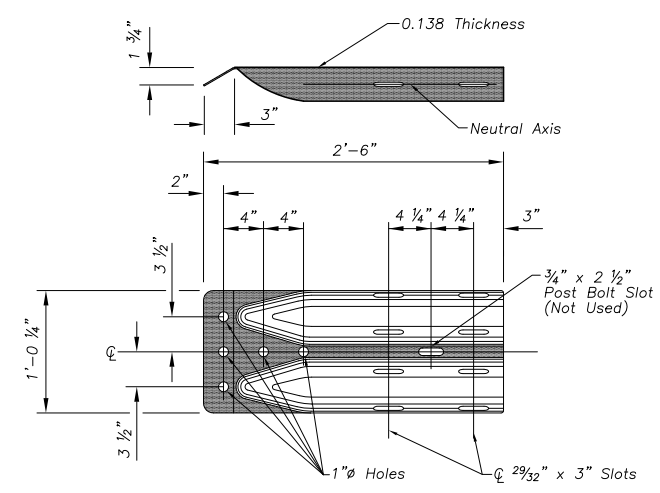

Note: ⬭ The 4 Interior Slotted Holes Are Optional These Holes Need Not Be Filled With Bolts

MICHIGAN END SHOE DETAIL

Scale: ¾" = 1'-0"

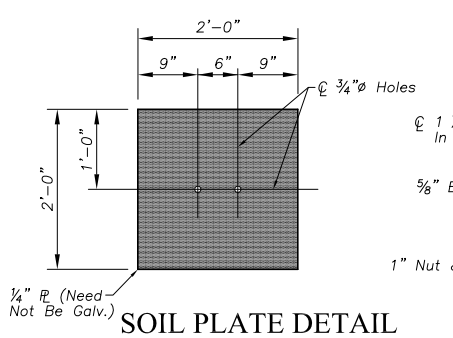

SOIL PLATE DETAIL

Scale: ½" = 1'-0"

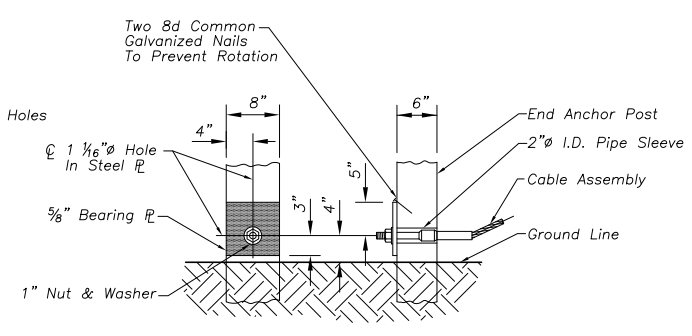

DETAIL A

Use With Concrete Anchor Scale: ½" = 1'-0"

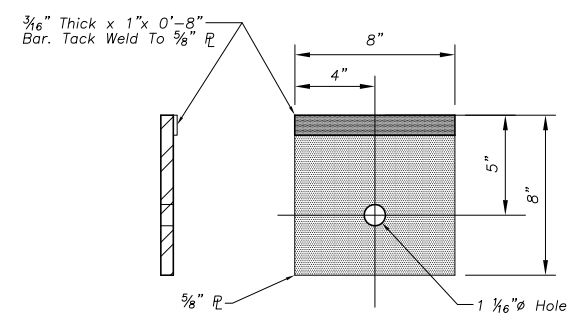

DETAIL B - BEARING PLATE

Use With Steel Anchor Scale: 1 ½" = 1'-0"

STANDARD BRIDGE W-BEAM APPROACH GUARDRAIL

Date: _____

Approved: _____
Forest Engineer

DRAWING NO. R1902

SHEET 2 Of 2

Copyright @ 2004 HKM Engineering Inc., All Rights Reserved.

AG-0355-S-09-0004

No.	Revision	By	Date

WARNING 0 1 2 3 IF THIS BAR DOES NOT MEASURE 1" THEN DRAWING IS NOT TO SCALE

U.S.D.A. FOREST SERVICE – REGION1
BEARTOOTH RANGER DISTRICT – CUSTER NATIONAL FOREST
RECONSTRUCTION OF WEST FORK ROCK CREEK ROAD #2071
PHASE IV
TREATED TIMBER BRIDGE REPAIRS

Project No. 04M551.104 ● SHEETD-10_bridge.dwg ● Date MAR. 2004 ● Designed – ● Drawn – ● Checked – ● Approved –

HKM Engineering Inc.
601 Nikles Drive
Suite 2
Bozeman, Montana 59715
(406) 586-8834, FAX (406) 586-1730

Sheet No. D-20

F:\1-06148-USFS W FORK ROCK CREEK\CADD-06148\M551104\SHEETS\DET-BRIDGE.dwg 1/9/2007 11:33:40 AM MST

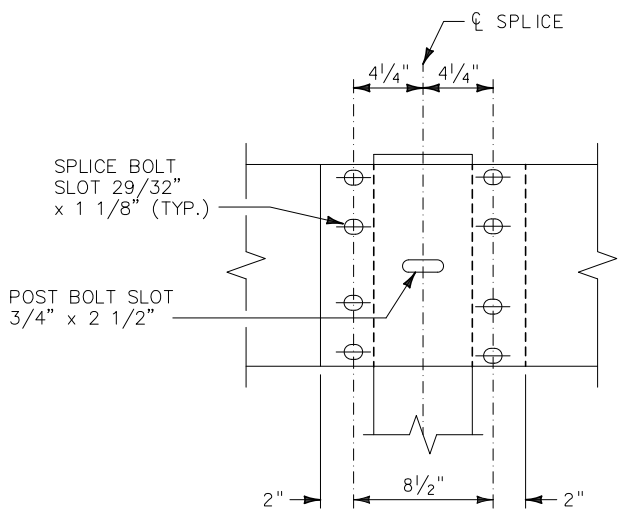

BEAM SPLICE

(LAP IN DIRECTION OF ADJACENT TRAFFIC)

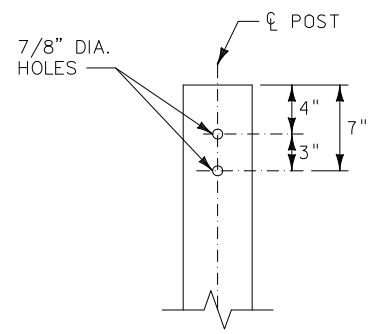

POST HOLE DETAIL

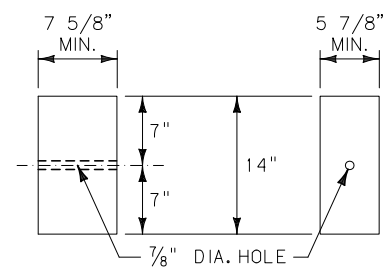

WOOD BLOCK

PDB01✳

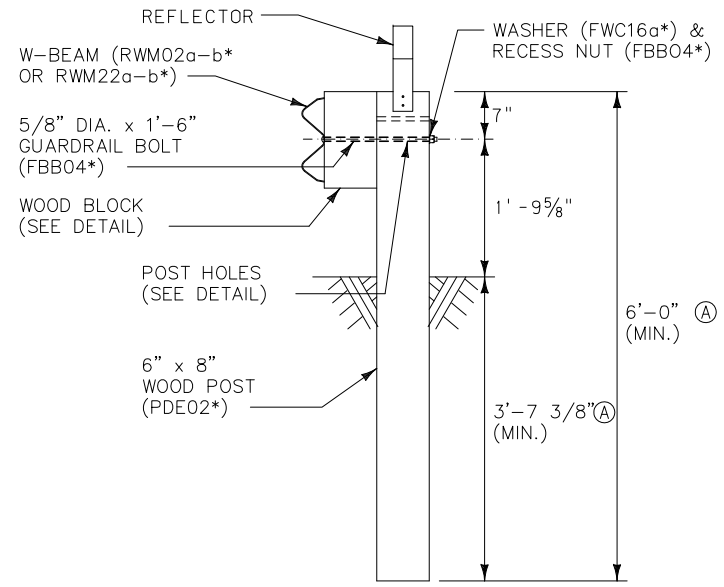

WOOD POST AND MOUNTING DETAIL

Ⓐ STANDARD UNLESS SPECIFIED OTHERWISE IN PLANS.

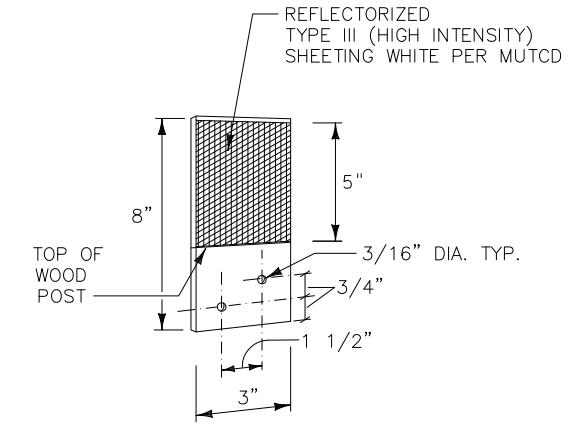

WOOD REFLECTOR

NOTES:

1. INSTALL ALL BOLTS WITH HEADS ON TRAFFIC SIDE OF INSTALLATION.
2. USE WOOD BLOCKS OR OTHER NCHRP 350 APPROVED BLOCKS. AFFIX BLOCKS TO POSTS WITH TWO 16 PENNY GALV. NAILS OR 14 GAGE WIRE WRAP.
3. FABRICATE REFLECTORS FROM 0.063" AA5052-H38 OR AA6061-T6 SHEET ALUMINUM. ATTACH REFLECTORS TO POSTS EVERY 25 FEET, INCLUDING TERMINAL SECTIONS, WITH THE REFLECTORIZED SURFACE FACING ADJACENT TRAFFIC. FASTEN REFLECTOR TO WOOD POST USING TWO 16 PENNY GALVANIZED NAILS AND TWO 3/16" DIA. WASHERS IN PRE-DRILLED HOLES.

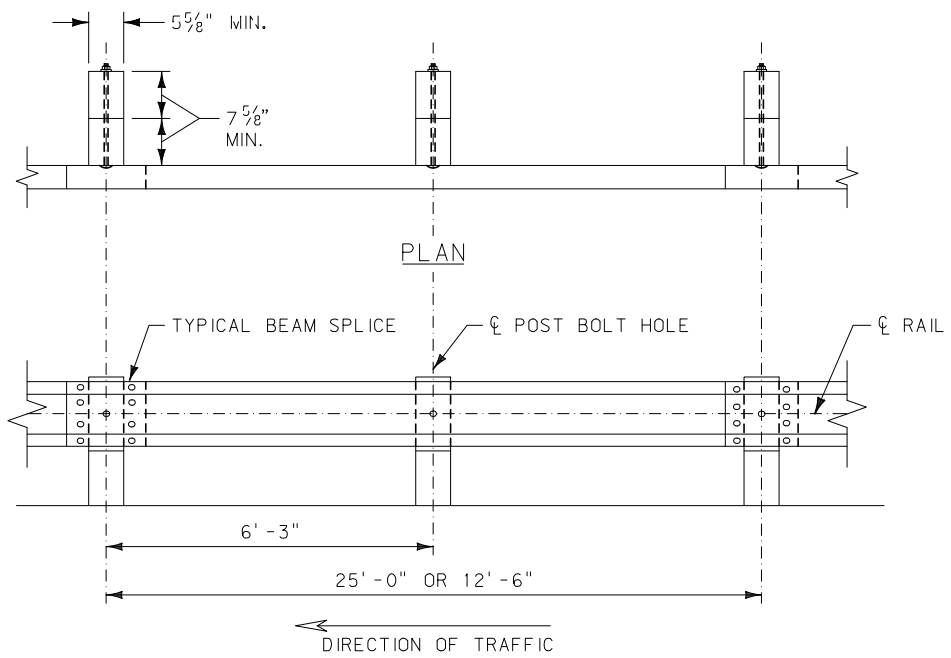

ELEVATION

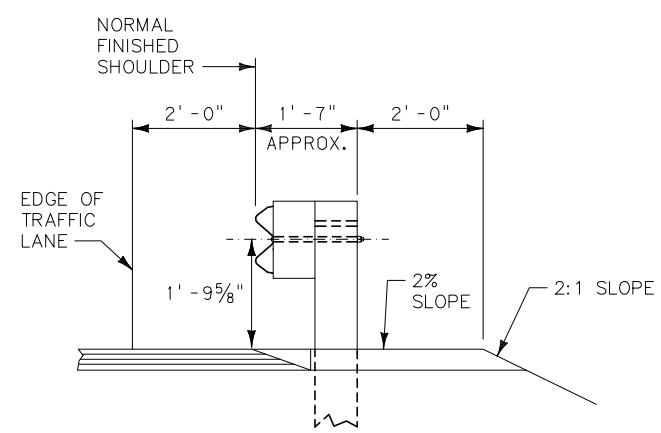

W BEAM GUARDRAIL – TYPICAL INSTALLATION

SCALE : NONE

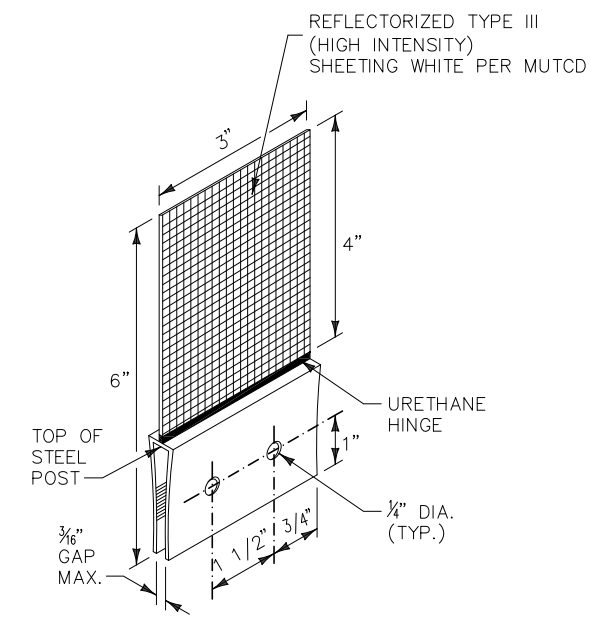

STEEL REFLECTOR

NOTES:

1. INSTALL ALL BOLTS WITH HEADS ON TRAFFIC SIDE OF INSTALLATION.
2. USE ROUTED WOOD BLOCKS OR OTHER NCHRP 350 APPROVED BLOCKS.
3. ATTACH REFLECTORS TO POSTS EVERY 25 FEET, INCLUDING TERMINAL SECTIONS, WITH THE REFLECTORIZED SURFACE FACING ADJACENT TRAFFIC. FASTEN REFLECTOR TO STEEL POST USING AN APPROVED ADHESIVE. REFLECTORS MAY BE BOLTED TO POSTS PROVIDED HOLES IN POSTS ARE DRILLED BEFORE BEING GALVANIZED.

✳ SEE SCHEDULE OF GUARDRAIL HARDWARE.

AG-0355-S-09-0004

No.	Revision	By	Date
1	50% SUBMITTAL	RDH	12/1/03
2	95% SUBMITTAL	SMJ	1/30/04
3	CONST. PLANS	SMJ	2/29/04

WARNING
0 1 2
IF THIS BAR DOES NOT MEASURE 1" THEN DRAWING IS NOT TO SCALE

U.S.D.A. FOREST SERVICE – REGION 1
BEARTOOTH RANGER DISTRICT – CUSTER NATIONAL FOREST
RECONSTRUCTION OF WEST FORK ROCK CREEK ROAD #2071
PHASE IV
GUARDRAIL DETAILS

◦ Project No. 04M551.104 ◦ D-4 LAYOUT ◦ Date MAY 2004 ◦ Designed LHB ◦ Drawn DMM ◦ Checked LHB ◦ Approved

HKM Engineering Inc.
601 Nikles Drive
Suite 2
Bozeman, Montana 59715
(406) 586-8834, FAX (406) 586-1730

Sheet No.
D-21

F:\1-06148-USFS W FORK ROCK CREEK\CADD-06148\M551104\SHEETS\Guardrail-Details.dwg 1/9/2007 11:29:26 AM MST

Copyright © 2004 HKM Engineering Inc., All Rights Reserved.

AG-0355-S-09-0004

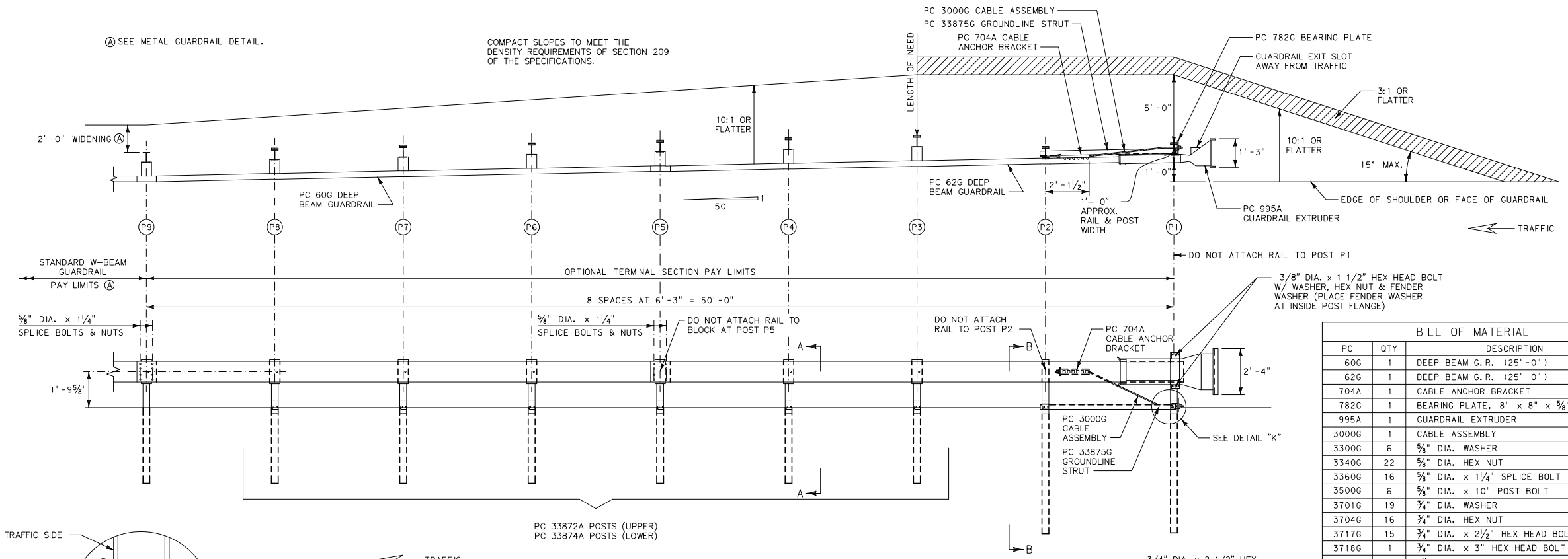

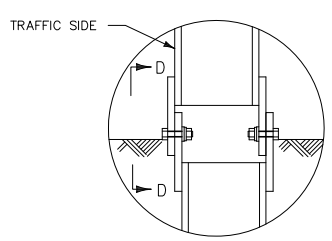

DETAIL D

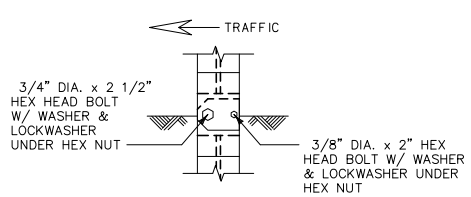

VIEW D-D

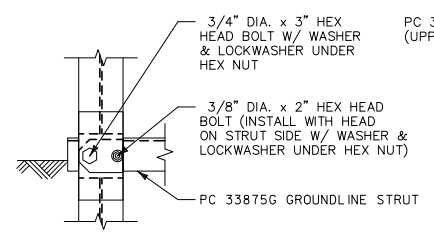

VIEW H-H

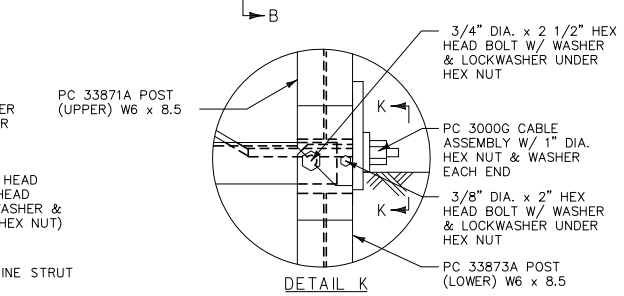

DETAIL K
(AT POST P1)

BILL OF MATERIAL		
PC	QTY	DESCRIPTION
60G	1	DEEP BEAM G.R. (25'-0")
62G	1	DEEP BEAM G.R. (25'-0")
704A	1	CABLE ANCHOR BRACKET
782G	1	BEARING PLATE, 8" x 8" x ⅝"
995A	1	GUARDRAIL EXTRUDER
3000G	1	CABLE ASSEMBLY
3300G	6	⅝" DIA. WASHER
3340G	22	⅝" DIA. HEX NUT
3360G	16	⅝" DIA. x 1¼" SPLICE BOLT
3500G	6	⅝" DIA. x 10" POST BOLT
3701G	19	¾" DIA. WASHER
3704G	16	¾" DIA. HEX NUT
3717G	15	¾" DIA. x 2½" HEX HEAD BOLT
3718G	1	¾" DIA. x 3" HEX HEAD BOLT
3900G	2	1" DIA. WASHER
3910G	2	1" DIA. HEX NUT
4076B	6	WOOD BLOCK, 6" x 8" x 1'-2"
4254G	18	⅜" DIA. WASHER
4255G	2	⅜" DIA. FENDER WASHER (1½" O.D.)
4258G	16	⅜" DIA. LOCKWASHER
4261G	2	⅜" DIA. x 1½" HEX HEAD BOLT
4699G	16	¾" DIA. LOCKWASHER
6321G	16	⅜" DIA. x 2" HEX HEAD BOLT
6405G	18	⅜" DIA. HEX NUT
33871A	1	ETPLUS HBA POST P1 (UPPER)
33872A	7	ETPLUS HBA POST P2 TO P8 (UPPER)
33873A	2	ETPLUS HBA POST P1 & P2 (LOWER)
33874A	6	ETPLUS HBA POST P3 TO P8 (LOWER)
33875G	1	6'-6" ANGLE STRUT ET HBA

NOTE:

SECTION "A-A" IS SIMILAR AT POST P5 EXCEPT RAIL IS NOT ATTACHED.

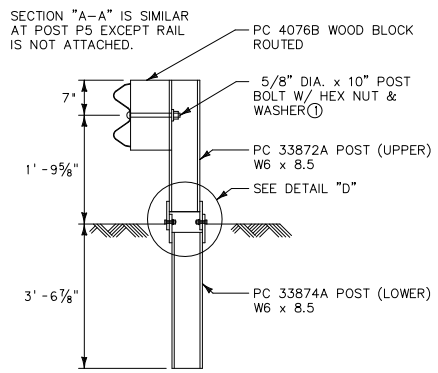

SECTION A-A
(TYP AT POSTS P3, P4, P6, P7 & P8)

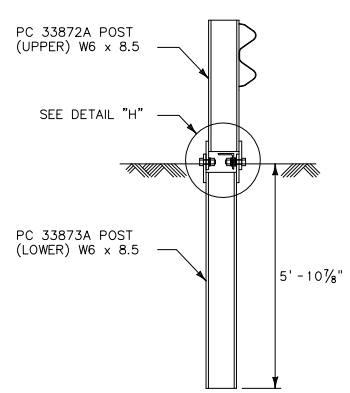

SECTION B-B
(AT POST P2)

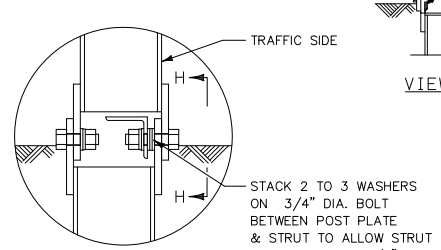

DETAIL H
(AT POST P2)

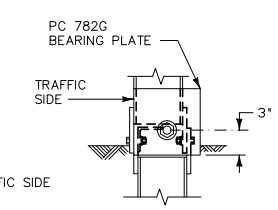

VIEW K-K

NOTES:

① THE 5/8" DIA. FLAT WASHER IS USED UNDER THE NUT, BEHIND THE POST ONLY. NO WASHER IS USED AT THE RAIL.

② USE THE ET-PLUS TERMINAL SECTION ON DIVIDED ROADWAYS IF THE WIDTH IS 25 FEET OR GREATER BETWEEN FINISHED SURFACES. CONSIDER OTHER TERMINAL SECTIONS IF THE WIDTH IS LESS THAN 25 FEET BETWEEN FINISHED SURFACES.

③ FLARE THE END SECTION AWAY FROM TRAFFIC AT A RATE OF 50:1 FOR 50 FEET (ILLUSTRATED). FLARES OF 50:1 FOR 100 FEET MAY ALSO BE USED. THE FLARE MAY BE OMITTED ON ROADS WITH SHOULDERS GREATER THAN 2 FEET IN WIDTH.

④ PLACE A SELF-ADHESIVE OBJECT MARKER ON THE GUARDRAIL EXTRUDER FACE, HAVING ALTERNATING RETRO-REFLECTIVE BLACK AND YELLOW STRIPES SLOPED DOWNWARD AT AN ANGLE OF 45^ TOWARDS THE SIDE ON WHICH TRAFFIC IS TO PASS.

⑤ ATTACH REFLECTORS TO TERMINAL SECTION POSTS, PER THE METAL GUARDRAIL DETAIL.

⑥ AFTER FINAL ASSEMBLY, RECHECK CABLE TO MAKE SURE IT IS TAUT AND HAS NOT RELAXED.

⑦ OBTAIN ENGINEER'S APPROVAL OF MANUFACTURER INSTALLATION OPTIONS WHEN SITE CONDITIONS PREVENT THE USE OF THE OPTION SHOWN ON THIS DETAIL.

ET PLUS FLARED TERMINAL SECTION
(EQUIVALENT SECTION MAY BE SUBMITTED FOR APPROVAL)
SCALE :NONE

F:\1-06148-USFS W FORK ROCK CREEK\CADD-06148\M551104\SHEETS\Guardrail-Details.dwg 1/9/2007 11:29:26 AM MST

No.	Revision	By	Date
1	50% SUBMITTAL	RDH	12/1/03
2	95% SUBMITTAL	SMJ	1/30/04
3	CONST. PLANS	SMJ	2/29/04

WARNING
0 1 2
IF THIS BAR DOES NOT MEASURE 1" THEN DRAWING IS NOT TO SCALE

• Project No. 04M551.103 • D-4 LAYOUT • Date MAR. 2004 • Designed LHB • Drawn SMJ • Checked LHB • Approved

U.S.D.A. FOREST SERVICE – REGION 1
BEARTOOTH RANGER DISTRICT – CUSTER NATIONAL FOREST
RECONSTRUCTION OF WEST FORK ROCK CREEK ROAD #2071
PHASE IV
GUARDRAIL DETAILS

HKM Engineering Inc.
601 Nikles Drive
Suite 2
Bozeman, Montana 59715
(406) 586-8834, FAX (406) 586-1730

Sheet No.
D-22

Copyright © 2004 HKM Engineering Inc., All Rights Reserved.

AG-0355-S-09-0004

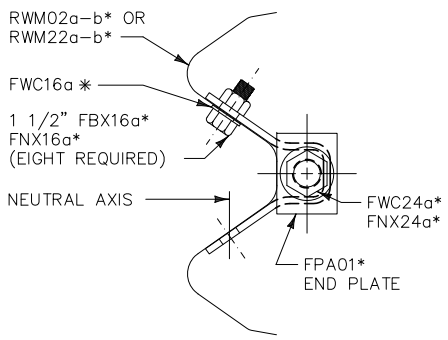

SECTION A-A

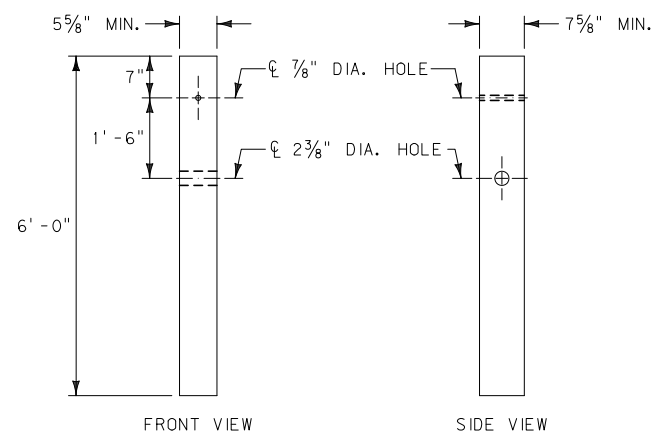

END POST DETAILS

PDF03✳

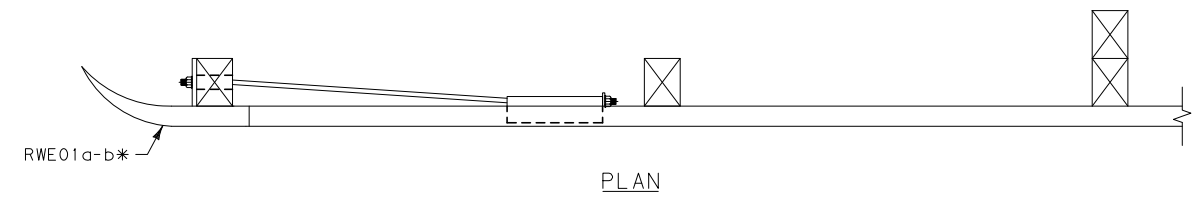

PLAN

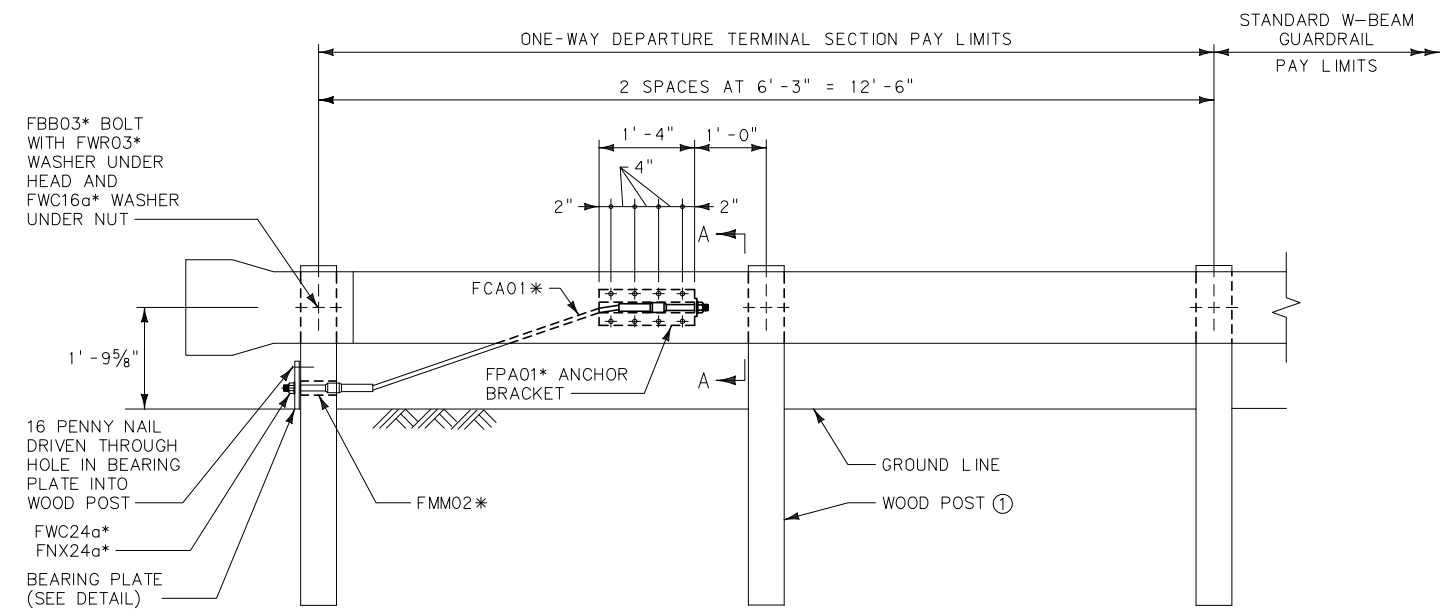

ELEVATION

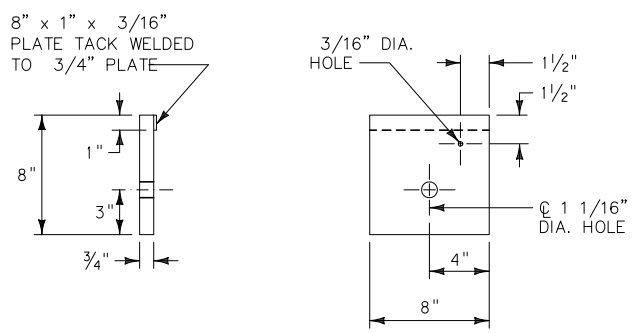

BEARING PLATE DETAIL

FPB01✳

NOTE:

① SEE DETAILS FOR METAL GUARDRAIL (W-BEAM).

✳ SEE DETAILS FOR SCHEDULE OF GUARDRAIL HARDWARE.

W BEAM – ONE WAY DEPARTURE SECTION

SCALE : NONE

No.	Revision	By	Date
1	50% SUBMITTAL	RDH	12/1/03
2	95% SUBMITTAL	SMJ	1/30/04
3	CONST. PLANS	SMJ	2/29/04

WARNING
0 ½ 1
IF THIS BAR DOES NOT MEASURE 1" THEN DRAWING IS NOT TO SCALE

U.S.D.A. FOREST SERVICE – REGION 1
BEARTOOTH RANGER DISTRICT – CUSTER NATIONAL FOREST
RECONSTRUCTION OF WEST FORK ROCK CREEK ROAD #2071
PHASE IV
GUARDRAIL DETAILS

Project No. 04M551.103 • D-4 LAYOUT • Date MAR. 2004 • Designed LHB • Drawn SMJ • Checked LHB • Approved

HKM Engineering Inc.
601 Nikles Drive
Suite 2
Bozeman, Montana 59715
(406) 586-8834, FAX (406) 586-1730

Sheet No.
D–23

F:\1-06148-USFS W FORK ROCK CREEK\CADD-06148\M551104\SHEETS\Guardrail-Details.dwg 1/9/2007 11:29:26 AM MST

Copyright © 2004 HKM Engineering Inc., All Rights Reserved.

F:\1-06148-USFS W FORK ROCK CREEK\CADD-06148\M551104\SHEETS\Guardrail-Details.dwg 1/9/2007 11:29:26 AM MST

AG-0355-S-09-0004

SCHEDULE OF GUARDRAIL HARDWARE	
DESIGNATION ①	DESCRIPTION
FBB01-05	5/8" DIA. GUARDRAIL BOLT AND RECESS NUT
FBX16a	5/8" DIA. HEX BOLT
FBX20a	3/4" DIA. HEX BOLT
FCA01	CABLE ASSEMBLY
FMM01	CABLE WEDGE
FMM02	POST SLEEVE
FNX16a	5/8" DIA. HEX NUT
FNX20a	3/4" DIA. HEX NUT
FNX24a	1" DIA. HEX NUT
FPA01	GUARDRAIL ANCHOR BRACKET & END PLATE
FPB01	BEARING PLATE
FWC16a	5/8" DIA. FLAT WASHER
FWC20a	3/4" DIA. FLAT WASHER
FWC24a	1" DIA. FLAT WASHER
FWR03	RECTANGULAR PLATE WASHER
PDB01	WOOD BLOCKOUT
PDE02	WOOD GUARDRAIL POST
PDE09	CRT POST
PDF01	WOOD BREAKAWAY POST
PDF03	END POST
PLS03	SOIL PLATE
PTE05	STEEL TUBE
PWE01	STEEL GUARDRAIL POST
RWE01a-b	W-BEAM END SECTION (FLARED
RWE02a-b	W-BEAM TERMINAL CONNECTOR
RWE06a-b	W-BEAM END SECTION (BUFFER)
RWM02a-b	W-BEAM (12'-6" LENGTH)
RWM22a-b	W-BEAM (25'-0" LENGTH)

NOTES:

① SEE AASHTO-AGC-ARTBA JOINT COMMITTEE TASK FORCE 13 REPORT "A GUIDE TO STANDARDIZED HIGHWAY BARRIER HARDWARE" PUBLICATION FOR ADDITIONAL AND DETAILED HARDWARE SPECIFICATIONS.

W BEAM - GUARDRAIL HARDWARE

SCALE : NONE

Project No. 04M551.103 ◦ D-4 LAYOUT ◦ Date MAR. 2004 ◦ Designed LHB ◦ Drawn SMJ ◦ Checked LHB ◦ Approved

U.S.D.A. FOREST SERVICE - REGION 1
BEARTOOTH RANGER DISTRICT - CUSTER NATIONAL FOREST
RECONSTRUCTION OF WEST FORK ROCK CREEK ROAD #2071
PHASE IV
MISCELLANEOUS DETAILS

WARNING
0 1
IF THIS BAR DOES NOT MEASURE 1" THEN DRAWING IS NOT TO SCALE

No.	Revision	By	Date
1	50% SUBMITTAL	RDH	12/1/03
2	95% SUBMITTAL	SMJ	1/30/04
3	CONST. PLANS	SMJ	2/29/04

HKM Engineering Inc.
601 Nikles Drive
Suite 2
Bozeman, Montana 59715
(406) 586-8834, FAX (406) 586-1730

Sheet No.
D-24

Copyright © 2004 HKM Engineering Inc., All Rights Reserved.

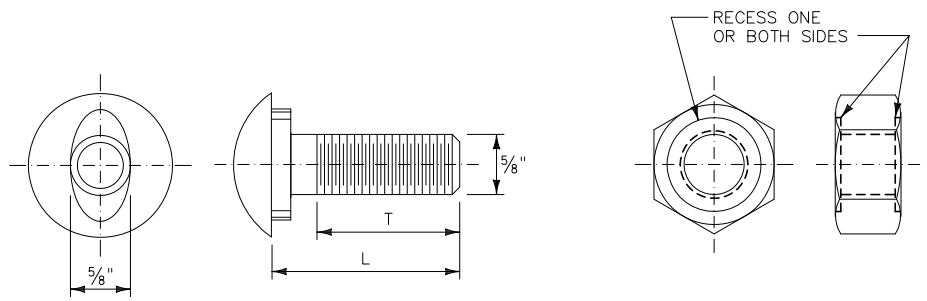

DESIGNATION *	L	T (MIN.)
FBB01	1¼"	FULL
FBB02	2"	1½"
FBB03	10"	1¾"
FBB04	1'-6"	2½"
FBB05	2'-1"	2"

5/8" DIA. GUARDRAIL BOLT & RECESS NUT

FBB01-05*

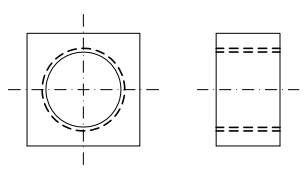

¾" DIA. SQUARE NUT

FNS20*

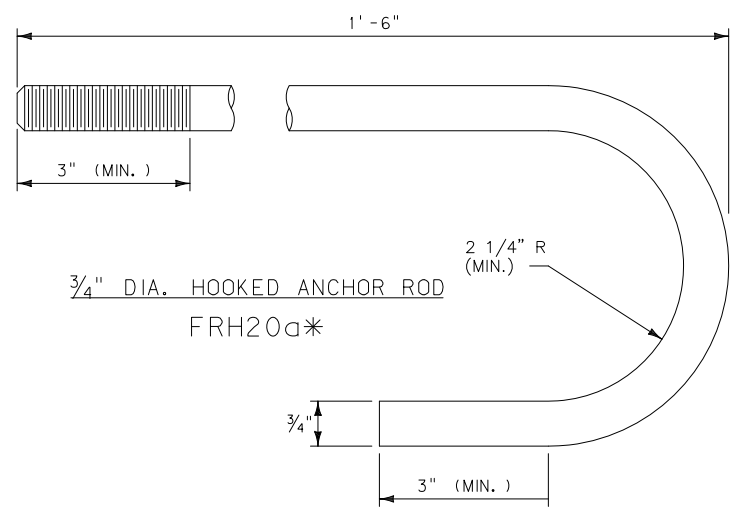

¾" DIA. HOOKED ANCHOR ROD

FRH20a*

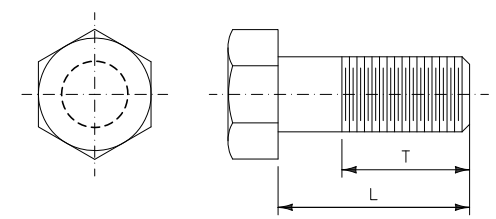

HEX BOLTS

BOLT SIZE	DESIGNATION *	L	T (MIN.)
REGULAR HEX BOLTS			
⅜" DIA.	FBX10a	3½"	1½"
⅜" DIA.	FBX10a	7½"	1½"
½" DIA.	FBX12a	1½"	FULL
½" DIA.	FBX12a	2½"	1¾"
⅝" DIA.	FBX16a	1½"	FULL
¾" DIA.	FBX20a	8"	2"
¾" DIA.	FBX20a	9½"	2"
HIGH STRENGTH HEX BOLTS			
¾" DIA.	FBX20b	2"	1½"
¾" DIA.	FBX20b	4"	2"
¾" DIA.	FBX20b	8"	2"

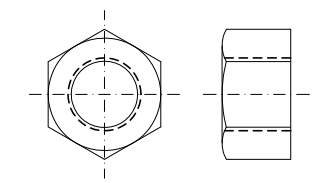

HEX NUT

NUT SIZE	DESIGNATION *
REGULAR HEX NUTS	
5/16" DIA.	FNX08a
⅜" DIA.	FNX10a
½" DIA.	FNX12a
⅝" DIA.	FNX16a
¾" DIA.	FNX20a
1" DIA.	FNX24a
HIGH STRENGTH HEX NUTS	
¾" DIA.	FNX20b

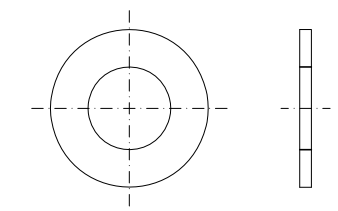

FLAT WASHERS

WASHER SIZE	DESIGNATION *
REGULAR FLAT WASHERS	
⅜" DIA.	FWC10a
½" DIA.	FWC12a
⅝" DIA.	FWC16a
¾" DIA.	FWC20a
1" DIA.	FWC24a
HARDENED FLAT WASHERS	
¾" DIA.	FWC20b

NOTES:

1. BOLTS AND ANCHOR RODS ARE TO CONFORM TO THE REQUIREMENTS OF ASTM F568 CLASS 4.6. NUTS ARE TO CONFORM TO THE REQUIREMENTS OF AASHTO M291 (ASTM A563) CLASS 5. USE STEEL WASHERS.
2. HIGH STRENGTH BOLTS ARE TO CONFORM TO THE REQUIREMENTS OF AASHTO M164 (ASTM A325) TYPE 1. HIGH STRENGTH NUTS ARE TO CONFORM TO THE REQUIREMENTS OF AASHTO M291 (ASTM A563) CLASS 10S. HARDENED WASHERS ARE TO CONFORM TO THE REQUIREMENTS OF AASHTO M293 (ASTM A436).
3. GALVANIZE BOLTS, NUTS AND WASHERS IN ACCORDANCE WITH AASHTO M232 (ASTM A153). NO PUNCHING, DRILLING OR CUTTING IS PERMITTED AFTER GALVANIZING.

* SEE SCHEDULE OF GUARDRAIL HARDWARE.

W BEAM – GUARDRAIL HARDWARE

SCALE : NONE

AG-0355-S-09-0004

No.	Revision	By	Date
1	50% SUBMITTAL	RDH	12/1/03
2	95% SUBMITTAL	SMJ	1/30/04
3	CONST. PLANS	SMJ	2/29/04

WARNING
0 1 2
IF THIS BAR DOES NOT MEASURE 1" THEN DRAWING IS NOT TO SCALE

U.S.D.A. FOREST SERVICE – REGION 1
BEARTOOTH RANGER DISTRICT – CUSTER NATIONAL FOREST
RECONSTRUCTION OF WEST FORK ROCK CREEK ROAD #2071
PHASE IV
GUARDRAIL DETAILS

• Project No. 04M551.103 • D-4 LAYOUT • Date MAR. 2004 • Designed LHB • Drawn SMJ • Checked LHB • Approved

HKM Engineering Inc.
601 Nikles Drive
Suite 2
Bozeman, Montana 59715
(406) 586-8834, FAX (406) 586-1730

Sheet No.
D-25

F:\1-06148-USFS W FORK ROCK CREEK\CADD-06148\M551104\SHEETS\Guardrail-Details.dwg 1/9/2007 11:29:26 AM MST

Copyright © 2004 HKM Engineering Inc., All Rights Reserved.

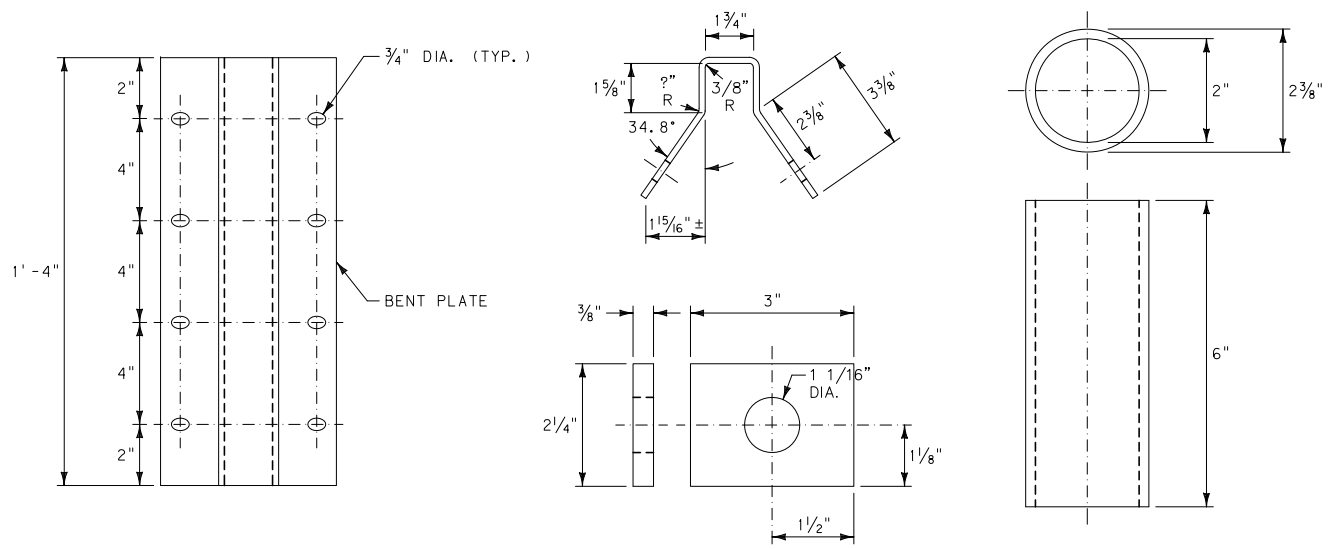

ANCHOR BRACKET & END PLATE

FPA01✳

POST SLEEVE

FMM02✳

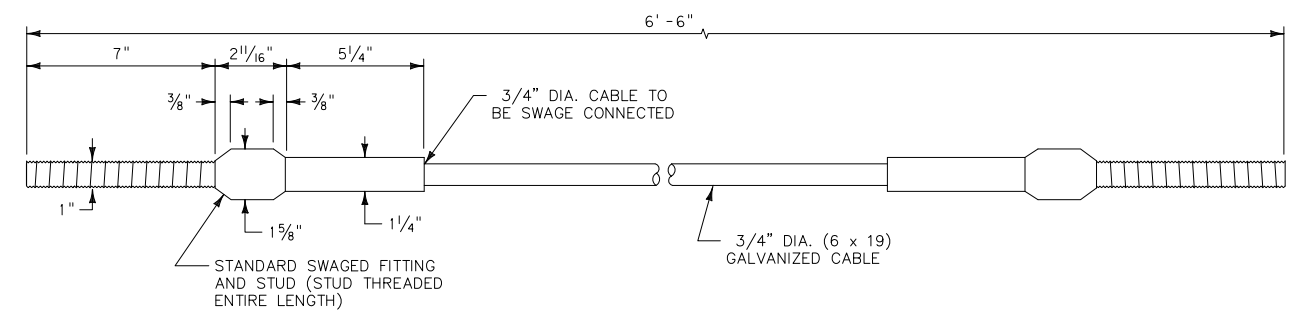

NOTES:

① FOR RELATED FASTENER HARDWARE SEE FWC24a*, FNX24a* AND FPA01*.

② MACHINE THE SWAGED FITTING FROM HOT-ROLLED CARBON STEEL. CONFORMING TO THE REQUIREMENTS OF ASTM A576, GRADE 1035, AND ANNEAL SUITABLE FOR COLD SWAGING. GALVANIZE THE SWAGED FITTING IN ACCORDANCE WITH AASHTO M111 (ASTM A123) BEFORE SWAGING. DRILL A LOCK PIN HOLE TO ACCOMMODATE A 1/4", PLATED SPRING STEEL PIN THROUGH THE HEAD OF THE SWAGED FITTING TO RETAIN THE STUD IN THE PROPER POSITION.

③ THE STUD IS TO CONFORM TO THE REQUIREMENTS OF ASTM F568 CLASS 8.8 AND BE GALVANIZED IN ACCORDANCE WITH AASHTO M232 (ASTM A153). PRIOR TO GALVANIZING, MILL A 3/8" SLOT INTO THE STUD END FOR THE LOCKING PIN.

④ WIRE ROPE IS TO CONFORM TO THE REQUIREMENTS OF AASHTO M30 AND BE 3/4" PREFORMED, 6 x 19, WIRE STRAND CORE OR INDEPENDENT WIRE ROPE CORE (IWRC), GALVANIZED, RIGHT REGULAR LAY, MANUFACTURED OF IMPROVED PLOW STEEL WITH A MINIMUM BREAKING STRENGTH OF 42,800 POUNDS.

⑤ THE SWAGED FITTING, STUD AND NUT (FNX24a*) MUST DEVELOP THE BREAKING STRENGTH OF THE WIRE ROPE.

CABLE ASSEMBLY

FCA01✳

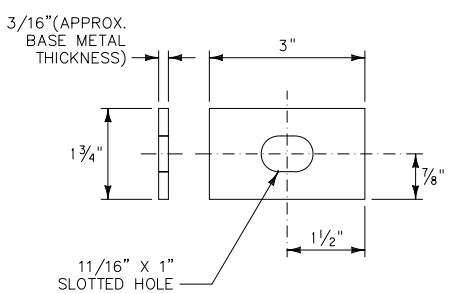

RECTANGULAR PLATE WASHER

FWR03✳

NOTES:

⑥ ANCHOR BRACKETS, END PLATES AND RECTANGULAR PLATE WASHERS ARE TO CONFORM TO THE REQUIREMENTS OF AASHTO M270 (ASTM A709) GRADE 36 STEEL PLATE. POST SLEEVES ARE TO CONFORM TO THE REQUIREMENTS OF ASTM A53 GRADE B.

⑦ GALVANIZE FABRICATED PARTS IN ACCORDANCE WITH AASHTO M111 (ASTM A123). NO PUNCHING, DRILLING OR CUTTING IS PERMITTED AFTER GALVANIZING.

✳ SEE SCHEDULE OF GUARDRAIL HARDWARE.

W BEAM – GUARDRAIL HARDWARE

SCALE : NONE

AG-0355-S-09-0004

No.	Revision	By	Date
1	50% SUBMITTAL	RDH	12/1/03
2	95% SUBMITTAL	SMJ	1/30/04
3	CONST. PLANS	SMJ	2/29/04

WARNING
0 1 2
IF THIS BAR DOES NOT MEASURE 1" THEN DRAWING IS NOT TO SCALE

U.S.D.A. FOREST SERVICE – REGION 1
BEARTOOTH RANGER DISTRICT – CUSTER NATIONAL FOREST
RECONSTRUCTION OF WEST FORK ROCK CREEK ROAD #2071
PHASE IV
GUARDRAIL DETAILS

◦ Project No. 04M551.103 ◦ D-4 LAYOUT ◦ Date MAR. 2004 ◦ Designed LHB ◦ Drawn SMJ ◦ Checked LHB ◦ Approved

HKM Engineering Inc.
601 Nikles Drive
Suite 2
Bozeman, Montana 59715
(406) 586-8834, FAX (406) 586-1730

Sheet No.
D-26

F:\1-06148-USFS W FORK ROCK CREEK\CADD-06148\M551104\SHEETS\Guardrail-Details.dwg 1/9/2007 11:29:26 AM MST

Copyright @ 2004 HKM Engineering Inc., All Rights Reserved.

AG-0355-S-09-0004

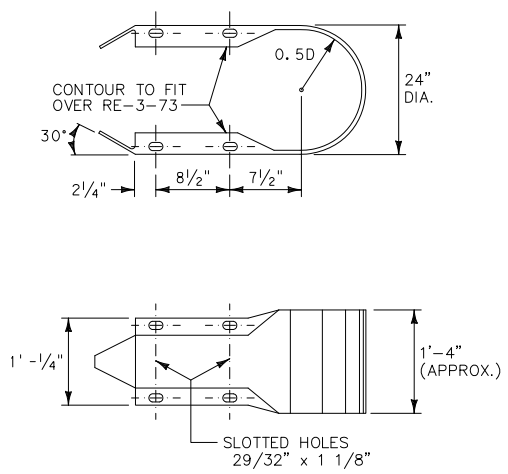

W-BEAM END SECTION (BUFFER)

RWE06a-b*

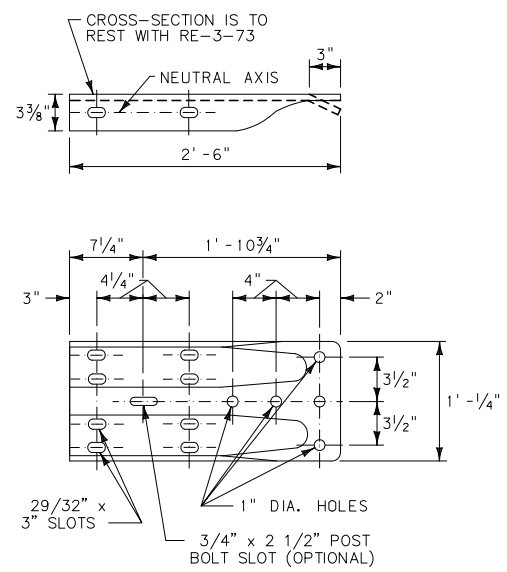

W-BEAM TERMINAL CONNECTOR

RWE02a-b*

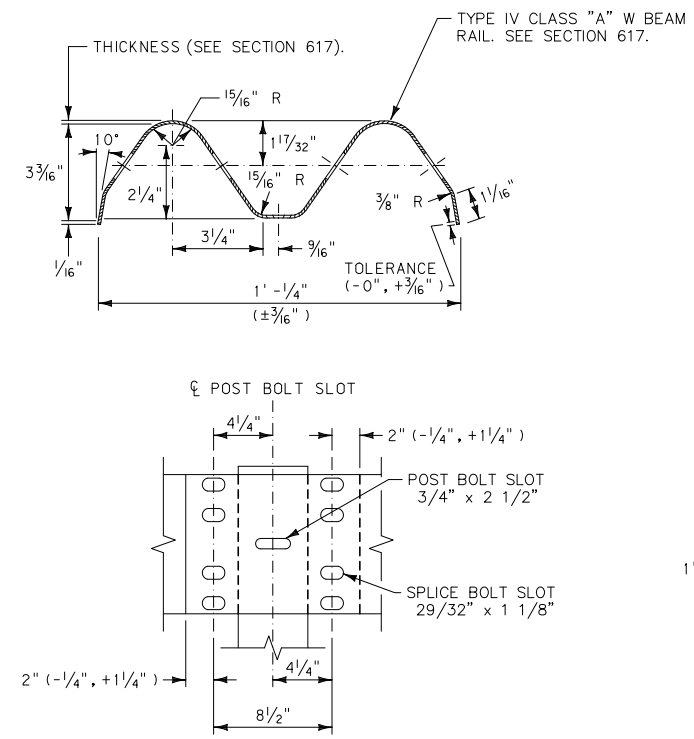

W-BEAM

RWM02a-b* (12'-6" LENGTH) OR RWM22a-b* (25'-0" LENGTH)

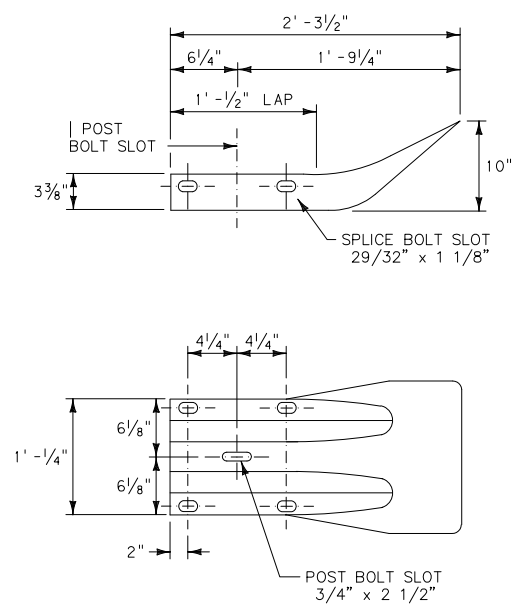

W-BEAM END SECTION (FLARED)

RWE01a-b*

W BEAM – GUARDRAIL HARDWARE

SCALE : NONE

No.	Revision	By	Date
1	50% SUBMITTAL	RDH	12/1/03
2	95% SUBMITTAL	SMJ	1/30/04
3	CONST. PLANS	SMJ	2/29/04

WARNING
0 1 2
IF THIS BAR DOES NOT MEASURE 1" THEN DRAWING IS NOT TO SCALE

U.S.D.A. FOREST SERVICE – REGION 1
BEARTOOTH RANGER DISTRICT – CUSTER NATIONAL FOREST
RECONSTRUCTION OF WEST FORK ROCK CREEK ROAD #2071
PHASE IV
GUARDRAIL DETAILS

Project No. 04M551.103 ◦ D-4 LAYOUT ◦ Date MAR. 2004 ◦ Designed LHB ◦ Drawn SMJ ◦ Checked LHB ◦ Approved

HKM Engineering Inc.
601 Nikles Drive
Suite 2
Bozeman, Montana 59715
(406) 586-8834, FAX (406) 586-1730

Sheet No.
D–27

F:\1-06148-USFS W FORK ROCK CREEK\CADD-06148\M551104\SHEETS\Guardrail-Details.dwg 1/9/2007 11:29:26 AM MST

Copyright © 2004 HKM Engineering Inc., All Rights Reserved.

GENERAL NOTES

REFLECTOR TABS SHALL BE INSTALLED AT 24 FOOT INTERVALS. REFLECTOR TABS WILL NOT BE PAID FOR SEPARATELY, BUT SHALL BE INCLUDED IN THE COST OF THE GUARDRAIL. FOR TWO-WAY ROADS, BOTH SIDES OF THE TABS SHALL BE REFLECTORIZED. REFLECTORIZATION COLOR SHALL MATCH THE COLOR OF THE ADJACENT TRAVELED WAY EDGE LINE.

WHERE A POST MUST BE OMITTED IN A GUARDRAIL RUN, SUCH AS AT A PIPE CULVERT WITH MINIMUM COVER, THE THRIE-BEAM RAIL SPANNING THE OMITTED-POST GAP SHALL BE DOUBLED (ONE RAIL NESTED IN OTHER).

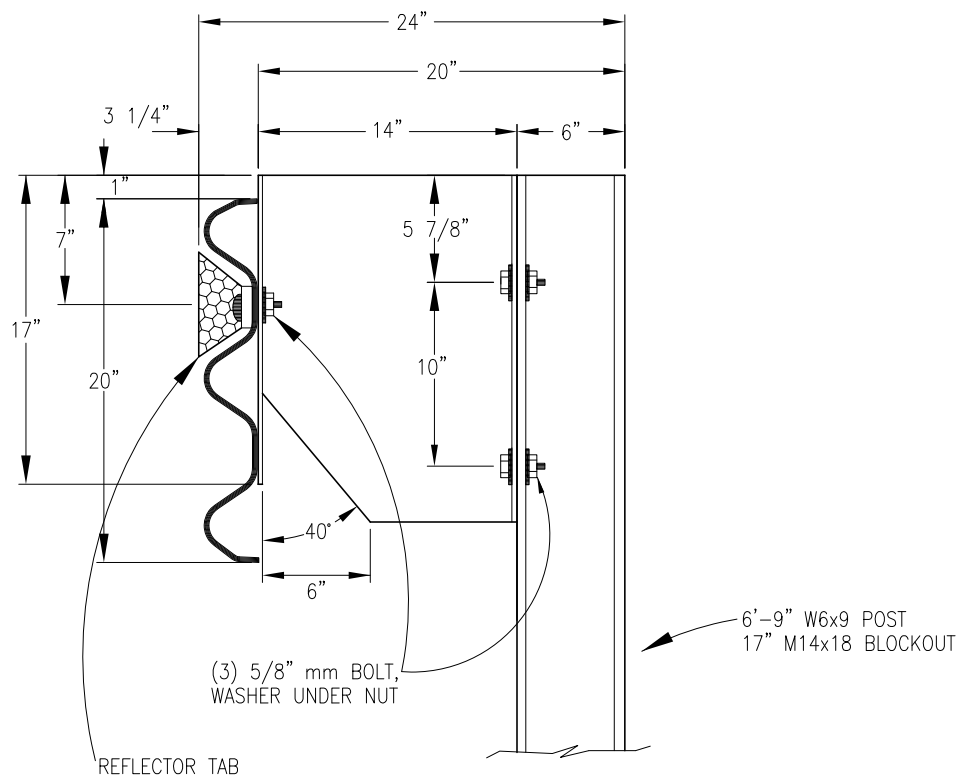

DETAIL – STEEL POST & BLOCK

SCALE : NONE

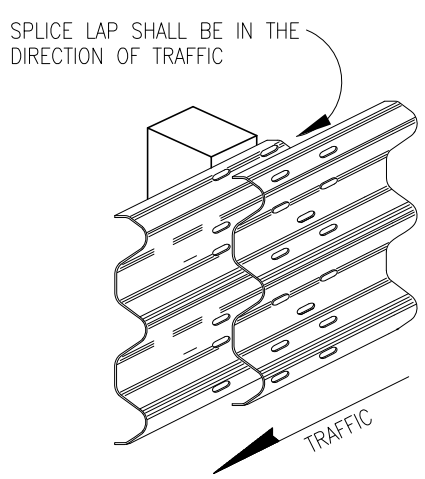

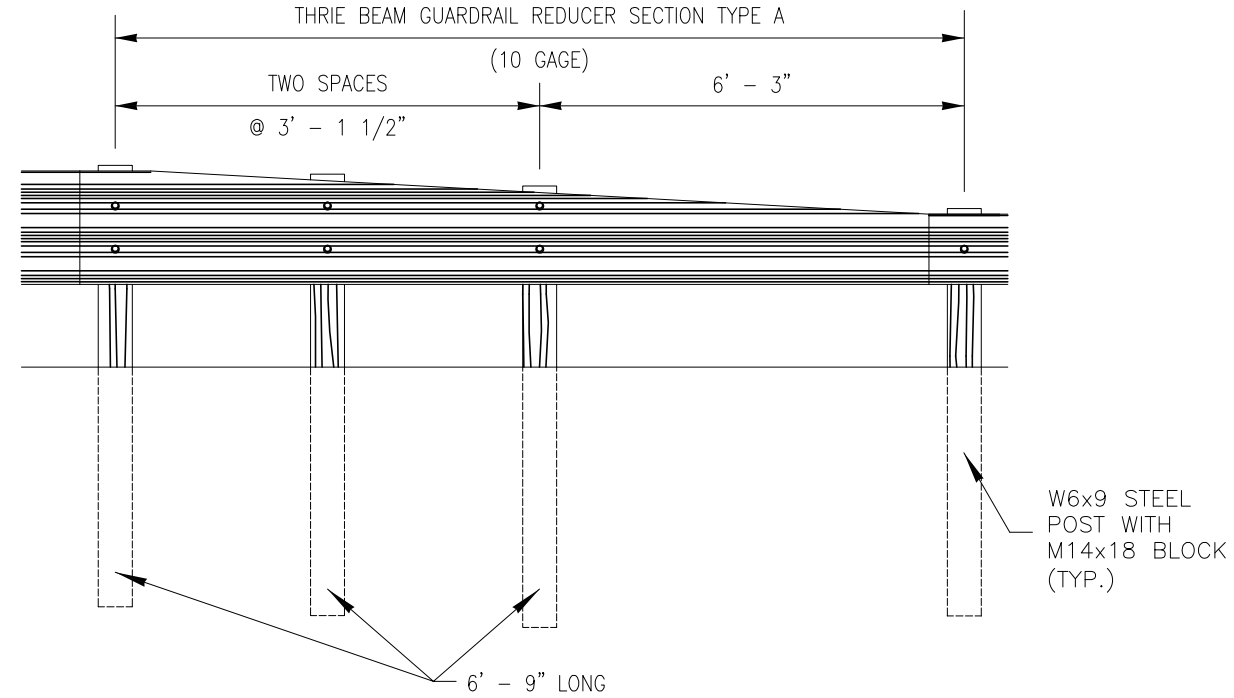

DETAIL – REDUCER SECTION

SCALE : NONE

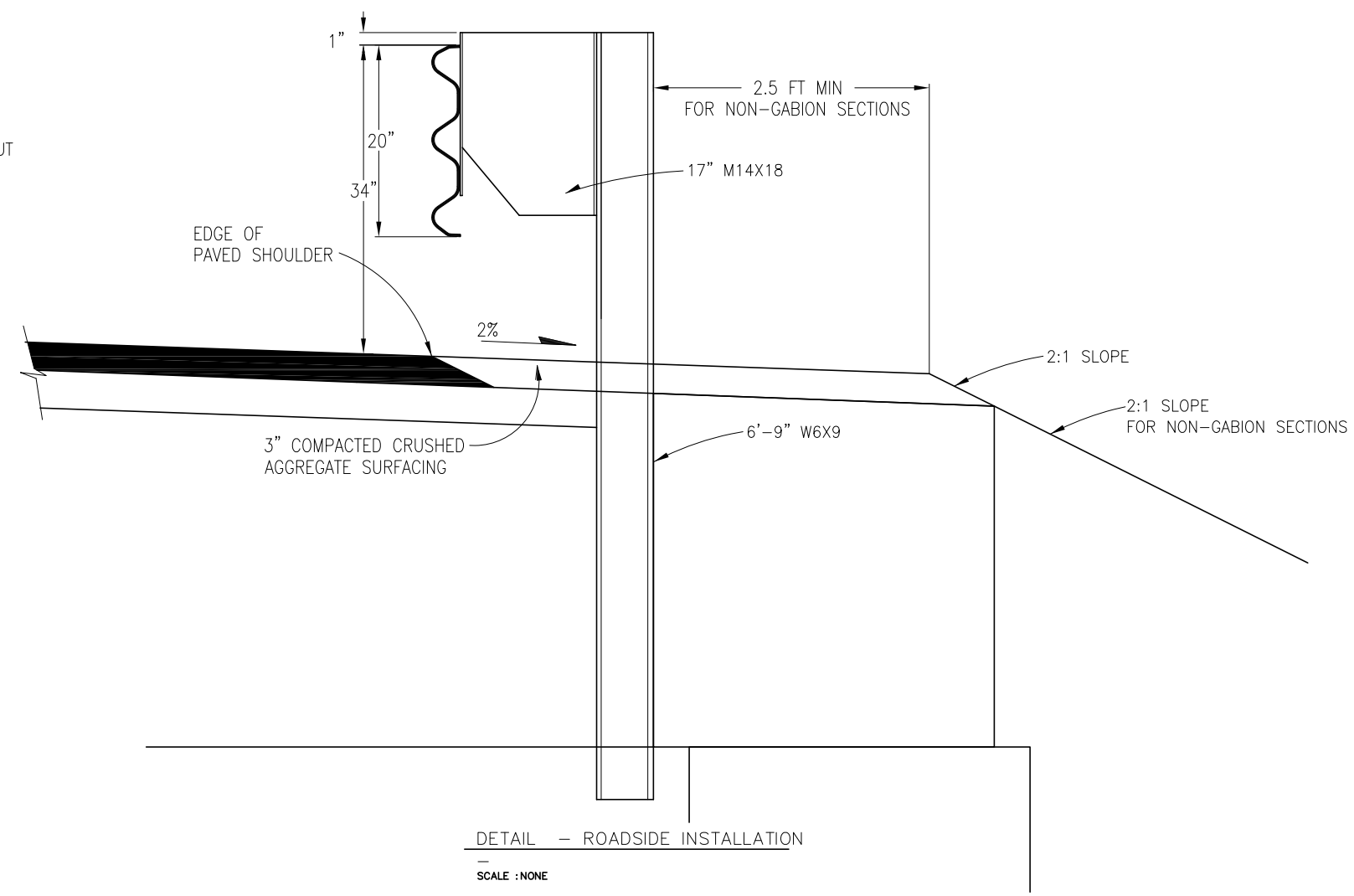

DETAIL – ROADSIDE INSTALLATION

SCALE : NONE

AG-0355-S-09-0004

No.	Revision	By	Date
1	50% SUBMITTAL	RDH	12/1/03
2	95% SUBMITTAL	SMJ	1/30/04
3	CONST. PLANS	SMJ	2/29/04

WARNING
0 1 2
IF THIS BAR DOES NOT MEASURE 1" THEN DRAWING IS NOT TO SCALE

Project No. 04M551.103 ◦ D-4 LAYOUT ◦ Date MAR. 2004 ◦ Designed LHB ◦ Drawn SMJ ◦ Checked LHB ◦ Approved

U.S.D.A. FOREST SERVICE – REGION 1
BEARTOOTH RANGER DISTRICT – CUSTER NATIONAL FOREST
RECONSTRUCTION OF WEST FORK ROCK CREEK ROAD #2071
PHASE IV
GUARDRAIL DETAILS

HKM Engineering Inc.
601 Nikles Drive
Suite 2
Bozeman, Montana 59715
(406) 586-8834, FAX (406) 586-1730

Sheet No.
D-28

F:\1-06148-USFS W FORK ROCK CREEK\CADD-06148\M551104\SHEETS\Guardrail-Details.dwg 1/9/2007 11:29:26 AM MST

Copyright @ 2004 HKM Engineering Inc., All Rights Reserved.