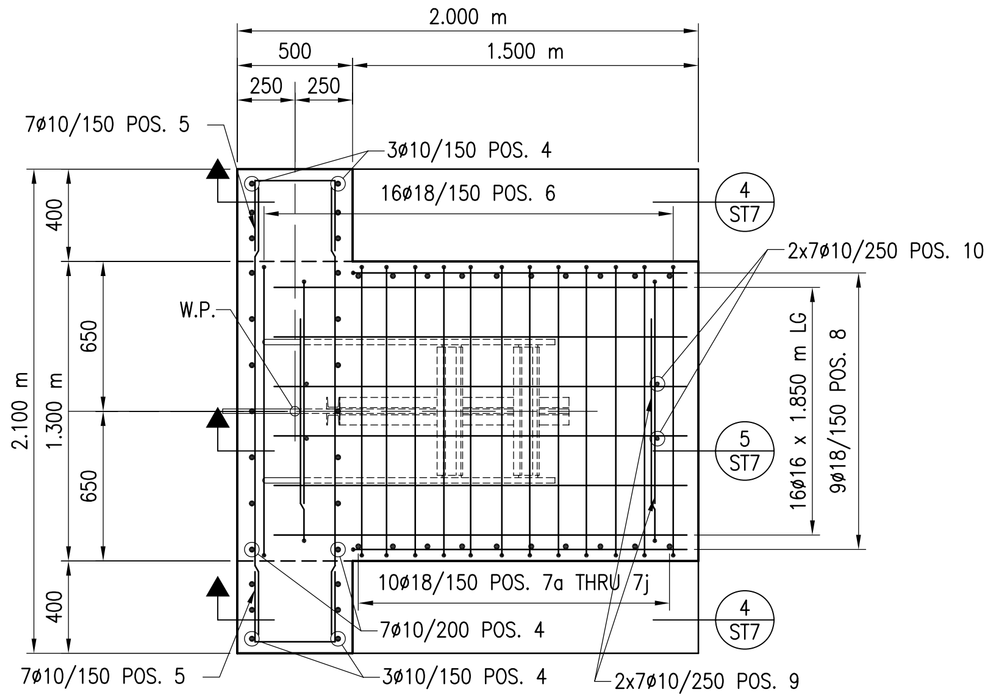

1 / ST7 PLAN – COUNTERFORT REINFORCEMENT
1:20

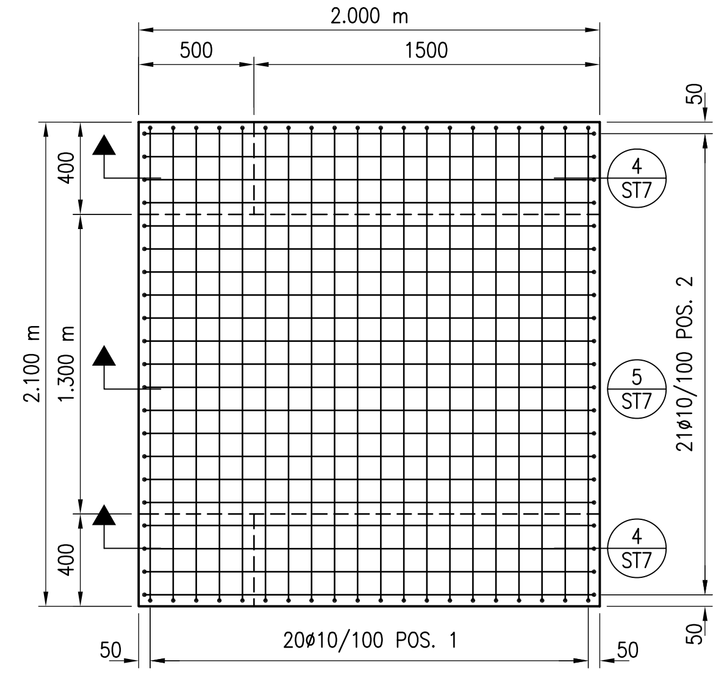

2 / ST7 PLAN – LOWER REINFORCEMENT
1:20

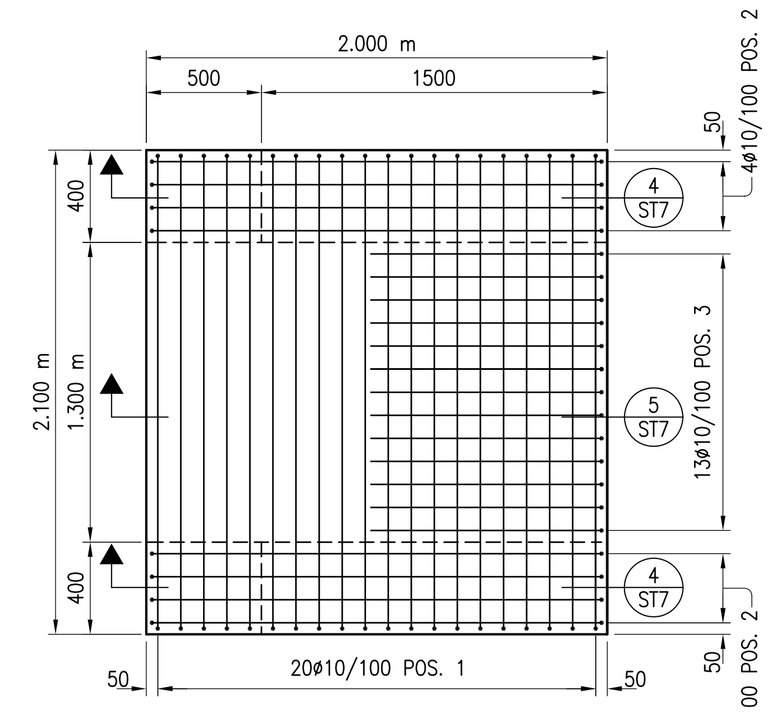

3 / ST7 PLAN – UPPER REINFORCEMENT
1:20

NOTE:
ALL DIMENSIONS ARE IN MILLIMETERS UNLESS OTHERWISE NOTED.

CONCRETE COVER: 50mm ALL SURFACES EXCEPT BOTTOM OF FOOTINGS: 80mm.

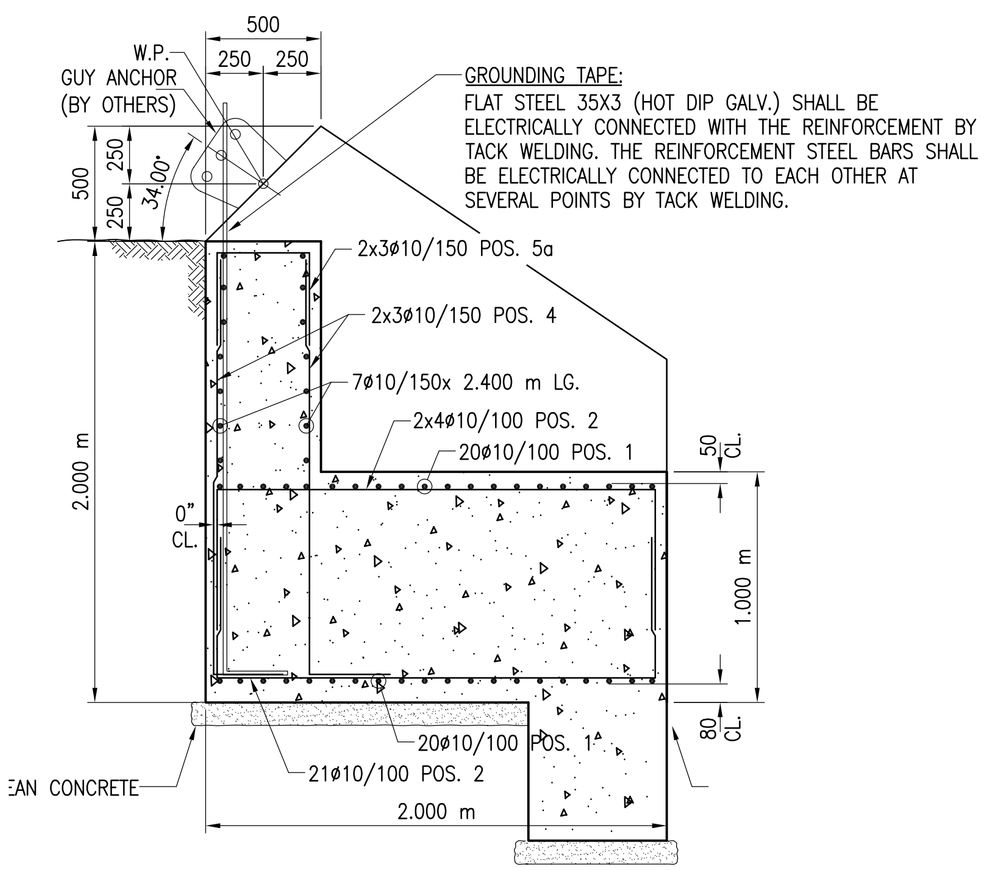

4 / ST7 SECTION – TYPE F
1:20

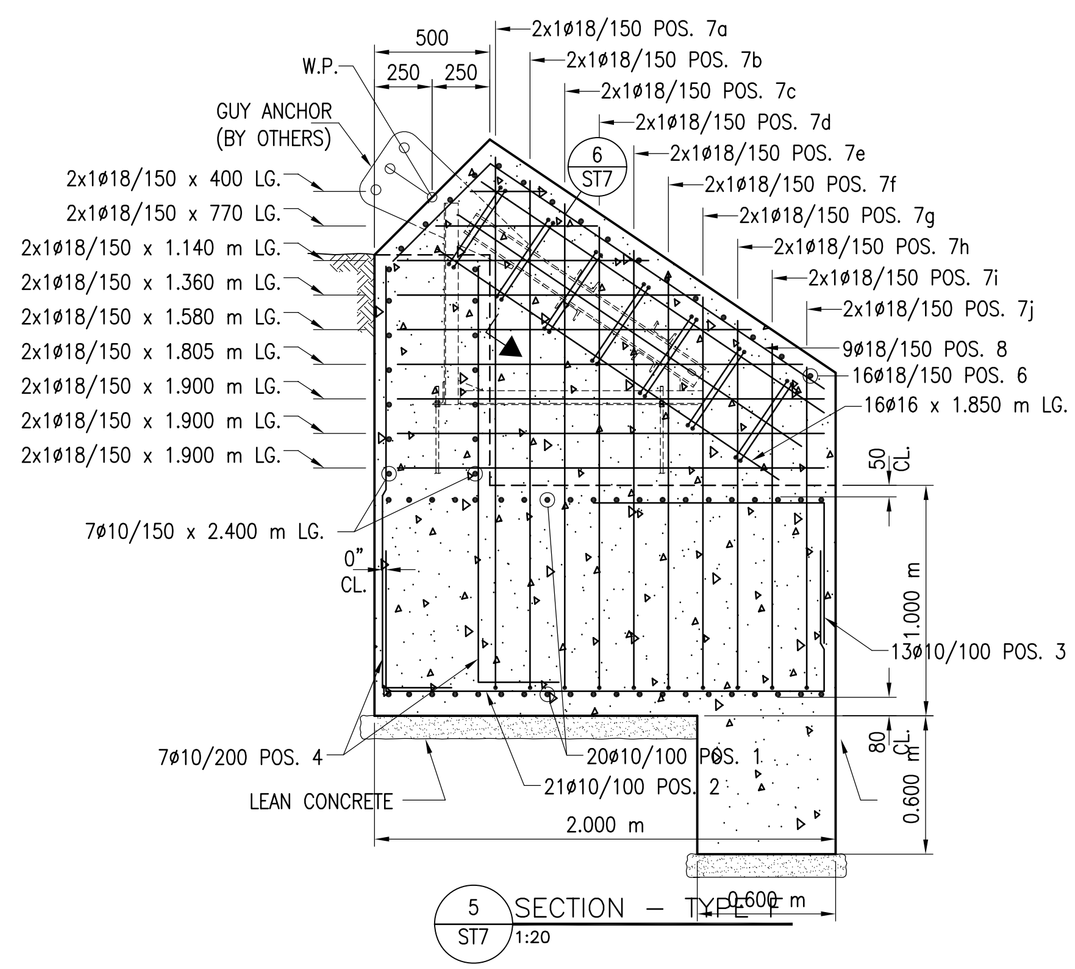

5 / ST7 SECTION – TYPE F
1:20

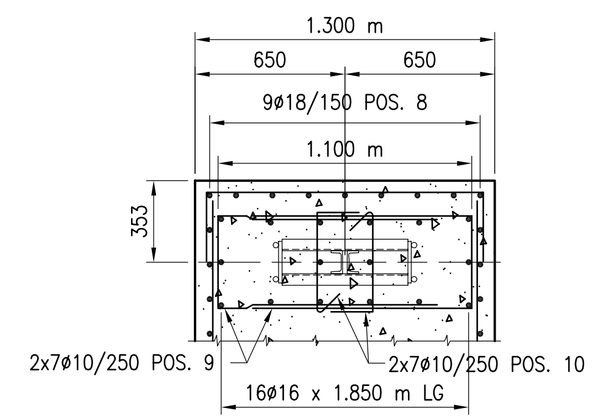

6 / ST7 SECTION – TYPE F
1:20

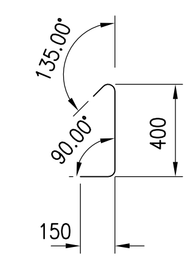

POS. 10
LG. = 640

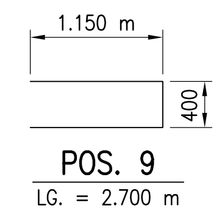

POS. 9
LG. = 2.700 m

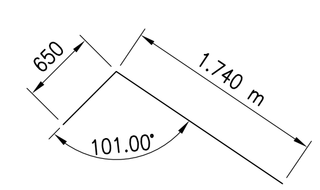

POS. 8
LG. = 2.390 m

AS BUILT

GRAPHIC SCALE:
0 0.25m 0.5m 1m
SCALE: 1:20 (METRIC)

SEAL:

REV	DESCRIPTIONS	DATE	APPD.
	REVISION		

INTERNATIONAL BROADCASTING BUREAU
ENGINEERING & TECHNICAL OPERATIONS
WASHINGTON, D.C. 20547

Bader Al Mulla & Bros. Co. W.L.L.
Engineering Group

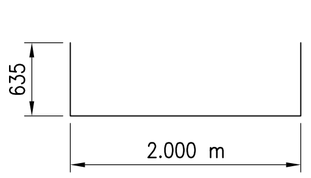

POS. 1
LG. = 3.270 m

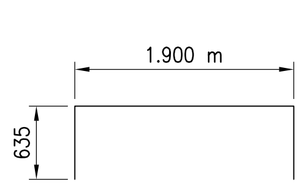

POS. 2
LG. = 3.170 m

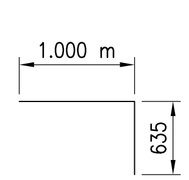

POS. 3
LG. = 1.635 m

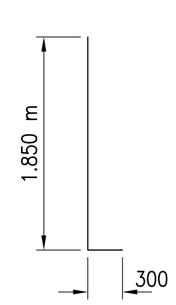

POS. 4
LG. = 2.150 m

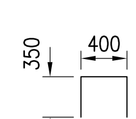

POS. 5a
LG. = 1.100 m

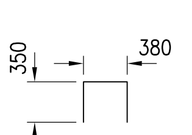

POS. 5
LG. = 1.080 m

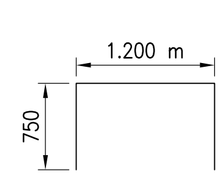

POS. 6
LG. = 2.700 m

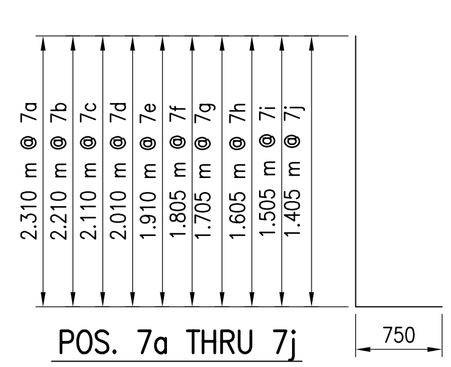

POS. 7a THRU 7j

7a – LG. = 3.060 m
7b – LG. = 2.960 m
7c – LG. = 2.860 m
7d – LG. = 2.760 m
7e – LG. = 2.660 m
7f – LG. = 2.555 m
7g – LG. = 2.455 m
7h – LG. = 2.355 m
7i – LG. = 2.255 m
7j – LG. = 2.155 m

		DATE
DRAWN	HAK	23/05/04
CHK. BY.	JPB	DATE
ENGR.	JPB	DATE
APPROVALS		
PROJ. MANAGER	TC	

SHORTWAVE EXPANSION PROJECT
FOUNDATION TYPE F

KUWAIT

IQC No.	XX-XX-XX	DWG. No.	BMB-AS-ST-07 ST7
TASK No.	X		
PROJ. No.	03NC080	SCALE: AS SHOWN	SHEET 1 OF SHT
CAD DESIGN FILE NAME:	FILENAME		

• 90 Detwil Drive, • Wayne, NJ. 07470 • TEL : (973) 785-4848 • FAX : (973) 785-0766 • www.hansoneng.com
HANSON
THALES
676 North Washington St., • Alexandria, VA. 22314 • TEL : (703) 836-5844 • FAX : (703) 836-5854 • www.thales-bm.com