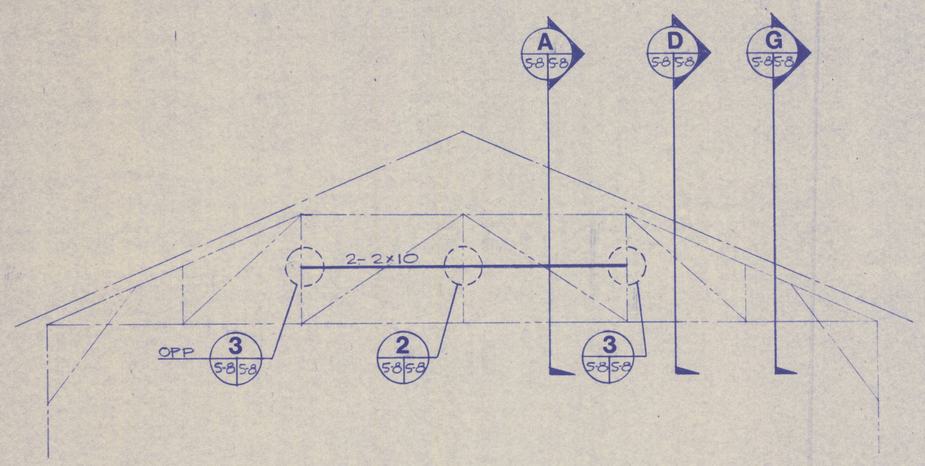

1 EXISTING TRUSS ELEVATION AT BALLROOM
SCALE: 1/4"= 1'-0"

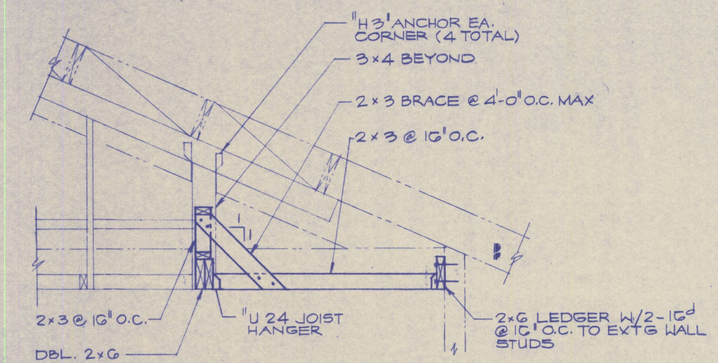

B SOFFIT SECTION
SCALE: 1"= 1'-0"

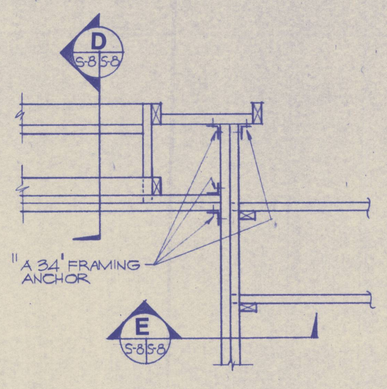

C FRAMING DETAIL AT SOFFIT CORNER
SCALE: 1"=1'-0"

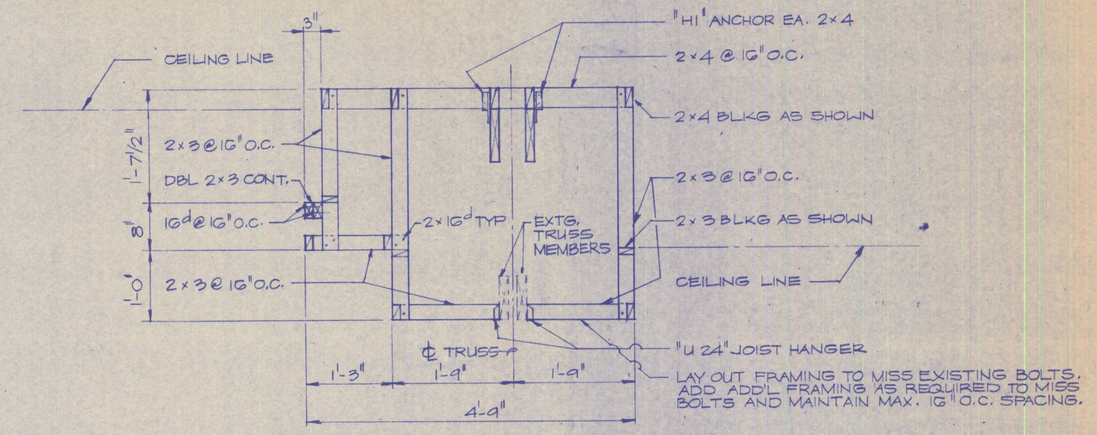

A FURRED SOFFIT AT EXIST. WD. TRUSS
SCALE: 1"= 1'-0"

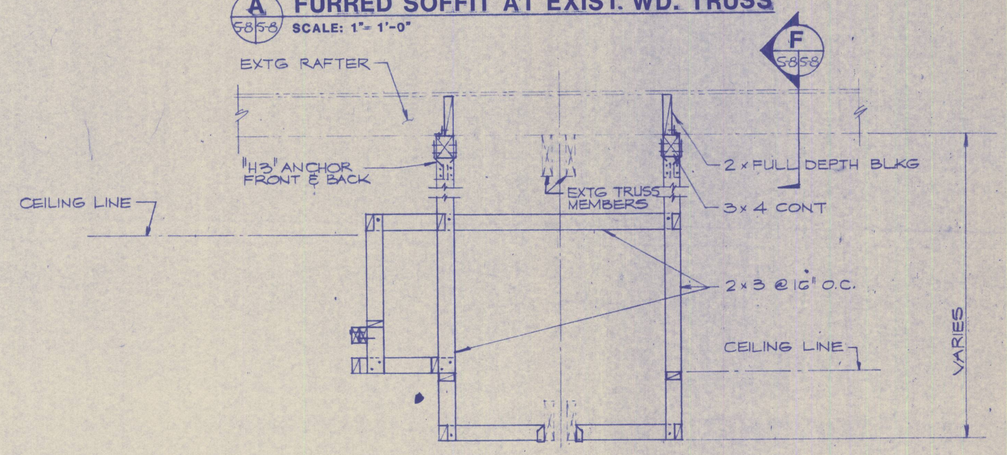

NOTE: FOR BALANCE OF INFORMATION SEE A

D FURRED SOFFIT AT EXIST. WD. TRUSS
SCALE: 1"= 1'-0"

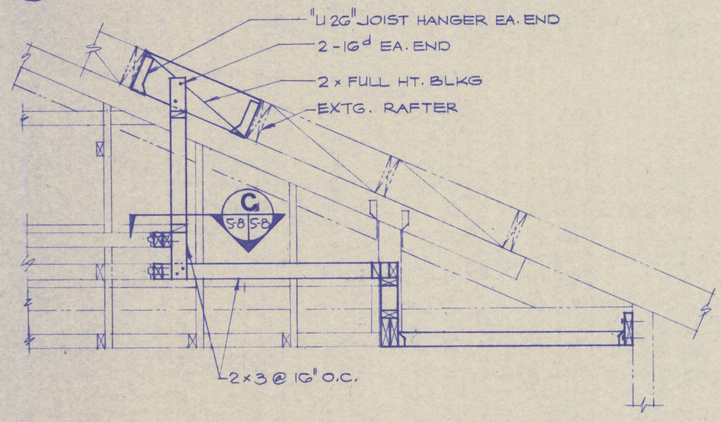

NOTE: FOR BALANCE OF INFORMATION SEE B

E SOFFIT SECTION
SCALE: 1"=1'-0"

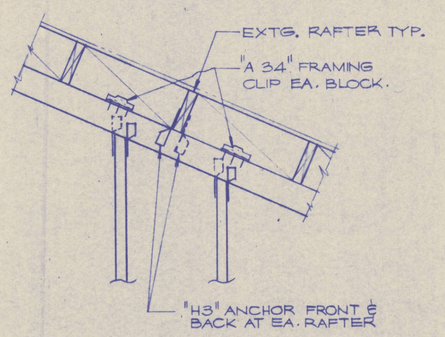

F SECTION
SCALE: 1"= 1'-0"

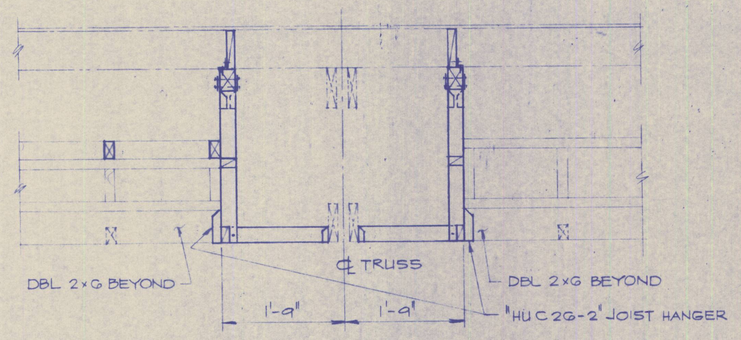

NOTE: FOR BALANCE OF INFORMATION SEE A & D

G FURRED SOFFIT AT EXIST. WD. TRUSS
SCALE: 1"=1'-0"

NOTE:

1. CONTRACTOR SHALL EXCERSIZE EXTREME CARE WHILE WORKING ON EXISTING ROOF TRUSSES. PREDRILL HOLES FOR NAILS IF SPLITTING OF MEMBER IS LIKELY TO OCCUR. ANY SPLITTING OF MEMBERS DURING CONSTRUCTION OR EXISTING SPLITS SHALL BE REPORTED TO THE CONTRACTING OFFICER.

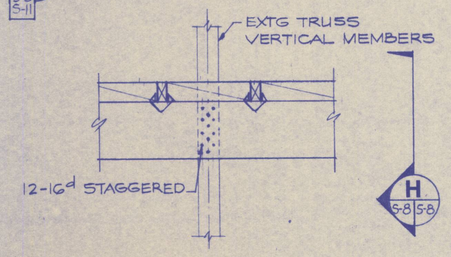

2 SECTION
SCALE: 1"=1'-0"

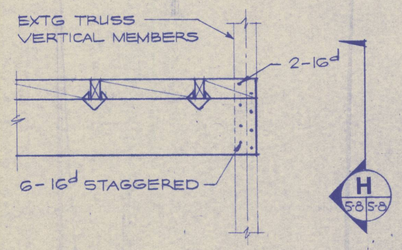

3 SECTION
SCALE: 1"=1'-0"

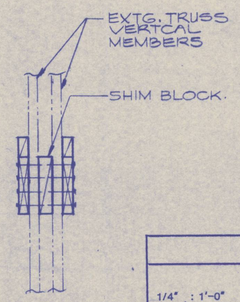

H SECTION
SCALE: 1"= 1'-0"

GRAPHIC SCALE

1/4" : 1'-0" — 4' 2' 0' 4' 8'

1" : 1'-0" — 12" 9" 6" 3" 0 1' 2'

REVISION NO.	DATE	DESCRIPTION	AGENCY	BY

Pan Am World Services, Inc.

UNITED STATES AIR FORCE
HQ 6592d SUPPORT GROUP (AFSC)
LOS ANGELES AIR FORCE BASE

DESIGNED BY MW
DRAWN BY TD
CHECKED BY
SUBMITTED BY DATE

COORDINATED: MANAGER ENGINEER DATE; SECURITY DATE; SAFETY DIVISION DATE; CHIEF FIRE PROTECTION DATE; COMMUNICATIONS ENGINEER DATE; BIOENVIRONMENTAL ENGINEER DATE

APPROVED: USING AGENCY DATE; BASE CIVIL ENGINEER DATE

RENOVATE BUILDING 403
COMMUNITY CENTER
LAO 89-1028
FORT MacARTHUR, CALIFORNIA
LOS ANGELES AIR FORCE BASE

BALLROOM SOFFIT SECTIONS

SPECIFICATION NO. 6592/DE 9010289
DATE 10-16-89 SCALE AS NOTED
DRAWING NUMBER 00403-5010289 (ATCH 3) 5-8
SHEET 33 OF 48