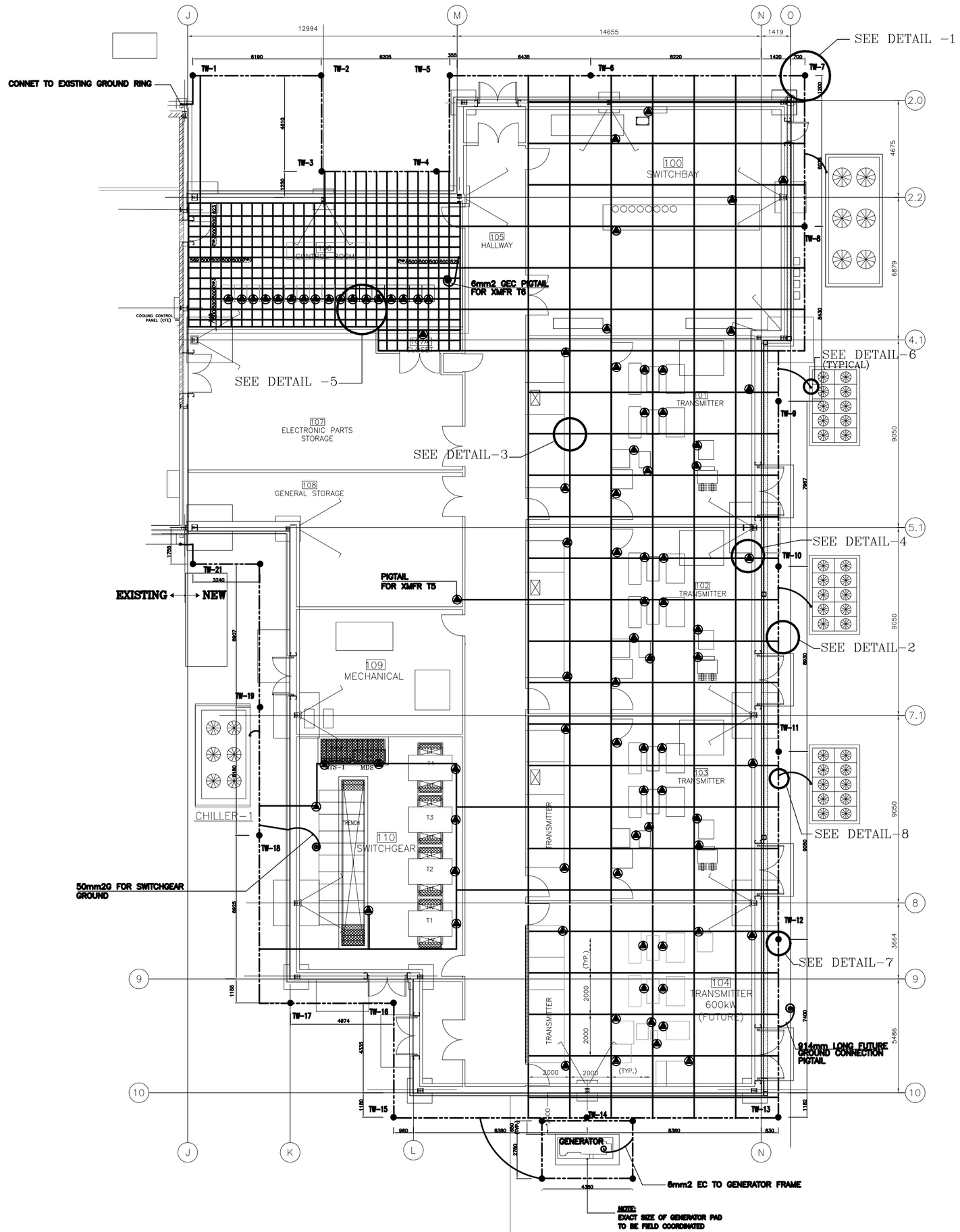

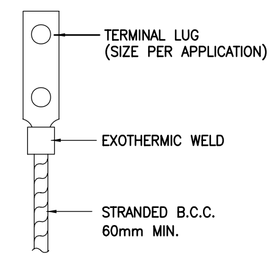

GROUND LUG CONNECTION

DETAIL -6

SCALE : NTS

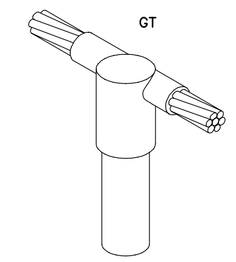

CABLE TO GROUND ROD CONNECTION

DETAIL -7

SCALE : NTS

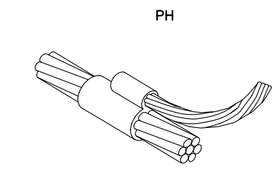

PARALLEL HORIZONTAL TEE CONNECTION

DETAIL -8

SCALE : NTS

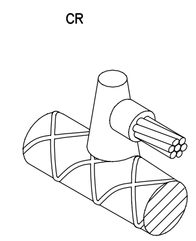

CABLE TO REBAR CONNECTION

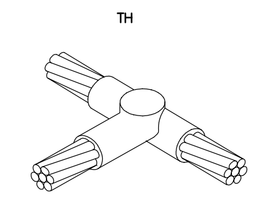

HORIZONTAL TEE CONNECTION

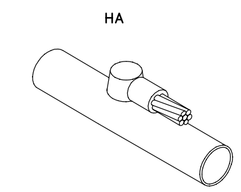

HORIZONTAL STEEL CONNECTION

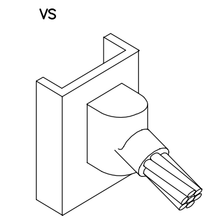

VERTICAL STEEL SURFACE CONNECTION

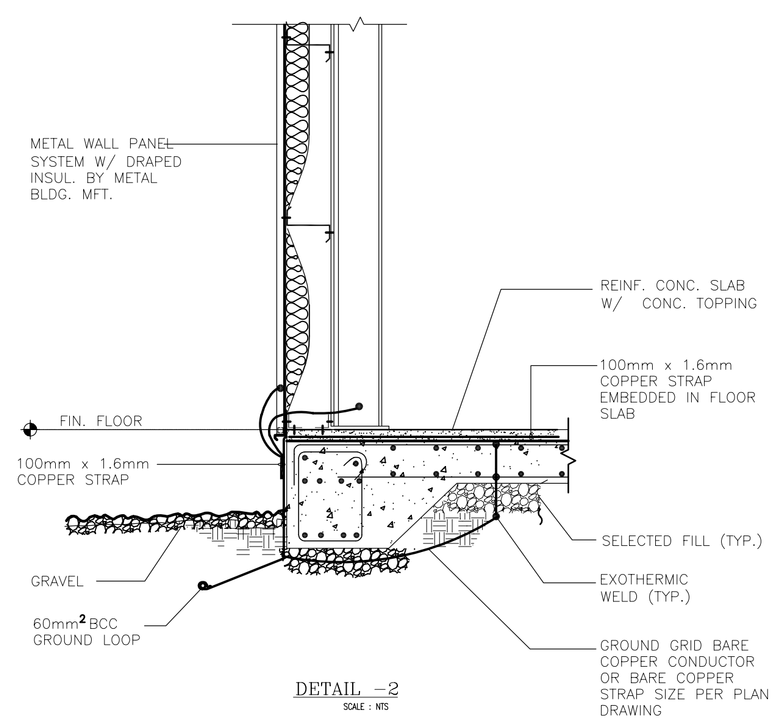

DETAIL -2

SCALE : NTS

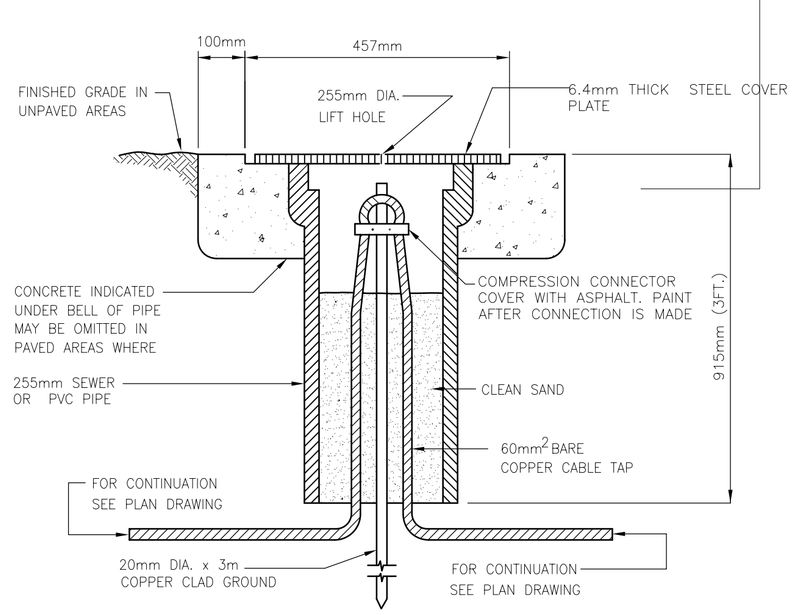

DETAIL -1

SCALE : NTS

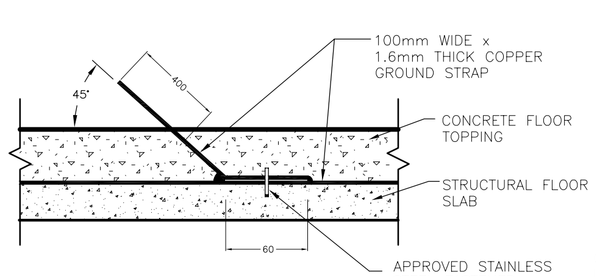

DETAIL -4

SCALE : NTS

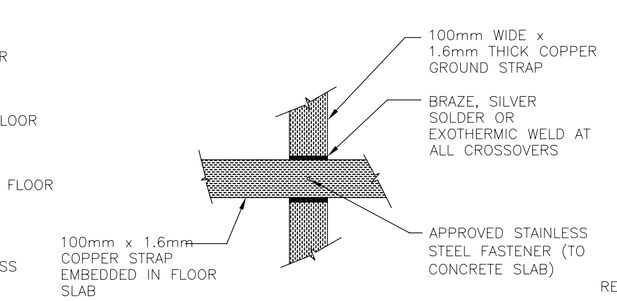

DETAIL -3

SCALE : NTS

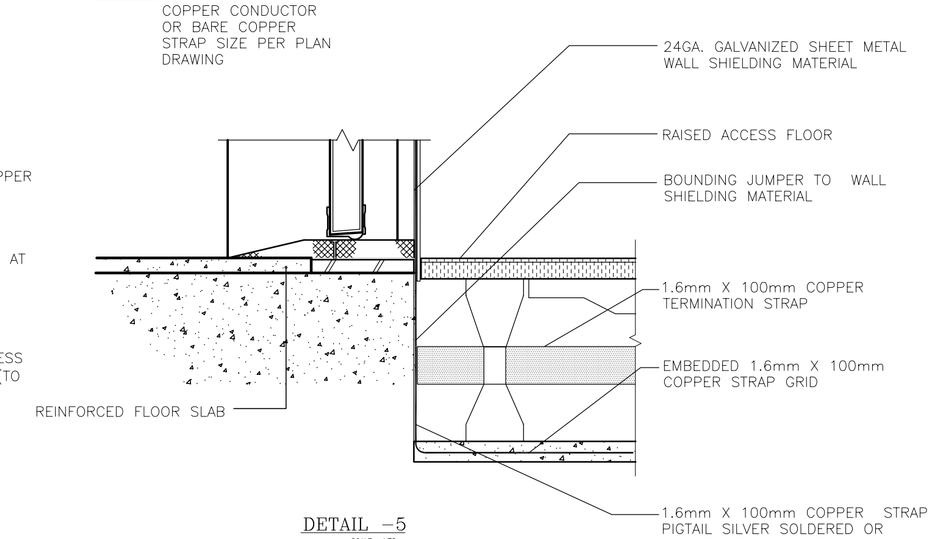

DETAIL -5

SCALE : NTS

NOTES

1. FOR ABBREVATIOS AND SYMBOLS, SEE DRAWING BMB-E-01
2. ALL DIMENSIONS ARE IN MILLIMETERS UNLESS OTHERWISE MENTIONED.
3. ALL WATER LINES ENTERING OR LEAVING THE BUILDING ARE CONNECTED TO THE GROUND RING WITH A 50mm2 BCC.
4. A 50mm2 BCC. (GUARD WIRE) IS TO BE INSTALLED ABOVE EACH DIRECT BURIAL RUN CABLE RUN OR CONDUIT DUCT BANK AND EXOTHERMACALLY BONDED TO THE GROUNDING ELECTRODE SYSTEM AT EACH END.
5. ALL GROUND WIRE AND CABLE ARE BARE STRANDED COPPER.
6. ALL METALLIC CONDUIT, WATER PIPES AND/OR FUEL LINES ARE CONNECT TO RING EARTHING SYSTEM
7. ALL STRUCTURAL STEEL,SCREEN WALLS, DOORS IN THE TRANSMITTER BAYS AND CONTROL ROOM WALLS, CEILING AND FLOOR ARE BONDED AND GROUNDED TO THE BUILDING GROUNDING SYSTEM.

LEGEND

	PERMETER GROUND RING 70mm2 STRANDED BARE COPPER CONDUCTOR
	#2/0 BCC GROUND CONDUCTOR
	GROUND ROD
TW	GROUND TEST WELL
	EXOTHERMIC CONNECTION CABLE TO CABLE
	EXOTHERMIC CONNECTION CABLE TO ROD
	100MM WIDE x 1.6MM THICK COPPER GROUND STRIP/GROUND GRIP EMBEDDED IN TOPPING ABOVE STRUCTURAL FLOOR SLAB.
	GROUND GRID ATTACHMENT PLATE
	GROUND BAR WALL OR COLUMN MTD.
	GROUND CABLE PIGTAIL 2M IN LENGTH
	FIXED AIR TERMINAL

AS BUILT

GRAPHIC SCALE:

0 1m 2m 5m

SCALE: 1:100 (METRIC)

SEAL:

REV	DESCRIPTIONS	DATE	APPR

REVISIONS

CHECKED BY: B.S.M

APPROVED BY: B.S.M

SUB.CONT: Bader Alfulla & Brothers Co.W.L.L (Engineering Group)
P.O. Box No.177, SAFAT KUWAIT
Tel. 4815077; FAX; 4839725

DRAWN HK DATE 18/8/03
CHK. BY. B.S.M
ENGR. B.S.M

INTERNATIONAL BROADCASTING BUREAU
ENGINEERING & TECHNICAL OPERATIONS
WASHINGTON, D.C. 20547

PROJECT SHORTWAVE EXPANSION PROJECT KUWAIT

APPROVALS
PROJ. MANAGER

TITLE TRANSMITTER BUILDING GROUNDING PLAN

IQC No.
TASK No.
PROJ. No.
CAD DESIGN FILE NAME:

DWG. No. BMB-EG-01 REV. 0 DWG.REF. E10

SCALE: 1 : 100 SHEET OF

CAD FILE : C:\SHORTWAVE\SUB-STN