REG	STATE	PROJECT	SHEET NO.	TOTAL SHEETS
8	FL	FL PFH 12-1(1) River Styx Bridges	A1	55

U.S. DEPARTMENT OF TRANSPORTATION
FEDERAL HIGHWAY ADMINISTRATION

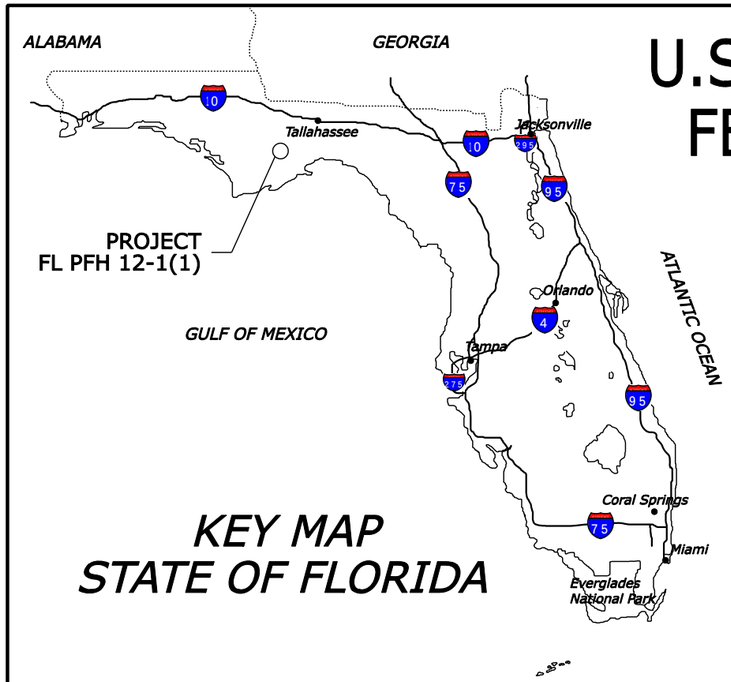

KEY MAP
STATE OF FLORIDA

PLANS FOR PROPOSED

FL PFH 12-1(1)

REPLACEMENT OF RIVER STYX BRIDGES

APALACHICOLA NATIONAL FOREST
LIBERTY COUNTY, FLORIDA

INDEX TO SHEETS

SHEET	DESCRIPTION
A1	TITLE SHEET
A2	SITE MAP
A3 - A4	CONVENTIONAL PLAN SYMBOLS AND ABBREVIATIONS
A5	SURVEY CONTROL
B1	TYPICAL SECTIONS
C1	SUMMARY OF QUANTITIES
C2 - C4	SUMMARIES
C5	EARTHWORK SUMMARY
D1 - D3	MAINLINE PLAN AND PROFILE
D4	PULLOUT DETAILS
D5 - D6	PRECAST CONCRETE BOX CULVERT LAYOUTS
D7	EXISTING UTILITIES PLAN
M1	EROSION CONTROL NARRATIVE
M2 -M3	EROSION CONTROL PLAN
N1	TEMPORARY TRAFFIC CONTROL SIGNING PLAN
P1	PERMANENT TRAFFIC CONTROL SIGNING PLAN
S1	DETAIL 157-1, SILT FENCE
S2	DETAIL E157-A, DEWATERING PLAN
S3	DETAIL E157-B, TURBIDITY BARRIER
S4 - S6	DETAIL E552-A TO E552-C, CAST-IN-PLACE DETAILS
S7	DETAIL E556-A, BRIDGE RAILING, STEEL
S8 - S10	DETAIL E602-A TO E602-C, CONCRETE BOX CULVERT (LRFD)
S11	DETAIL E617-A, STRUCTURE TRANSITION RAILING, G4 SYSTEM
S12	STANDARD 617-10, G4 W-BEAM GUARDRAIL WOOD POST
S13	STANDARD 617-11, G4 W-BEAM GUARDRAIL STEEL POST
S14	STANDARD 617-14, TERMINAL SECTION, LST
S15	STANDARD 617-15, G4 W-BEAM GUARDRAIL MELT, LST
S16	STANDARD 635-14, TEMPORARY TRAFFIC CONTROL SIGN INSTALLATION
T1 - T16	CROSS-SECTIONS

DESCRIPTION OF PROJECT

IMPROVEMENT: Remove existing bridges, install 2 Precast Concrete Box Culverts, (sta. 17+10.70 & sta. 28+64.83) Build approaches & regrade existing alignment.

PROJECT LENGTH: 0.27 miles

ROAD: Gravel

	WIDTH	TYPE
SURFACE:	14' ±	Gravel

DESIGN DESIGNATION:

ADT (2009) ---------- <100
ADT (2029) ---------- 150
DHV ---------- 23
D ---------- 50%
T ---------- 5%
V ---------- 25 mph
e(max) ---------- 0%

U.S. CUSTOMARY DIMENSIONS:
Slopes are expressed as RISE:RUN

SPECIFICATIONS:

"STANDARD SPECIFICATIONS FOR CONSTRUCTION OF ROADS AND BRIDGES ON FEDERAL HIGHWAY PROJECTS, FP-03, U.S. CUSTOMARY UNITS"

CALL BEFORE YOU DIG:
1-800-432-4770
http://www.callsunshine.com/corp/index.html
(Provide 72 hours notice)

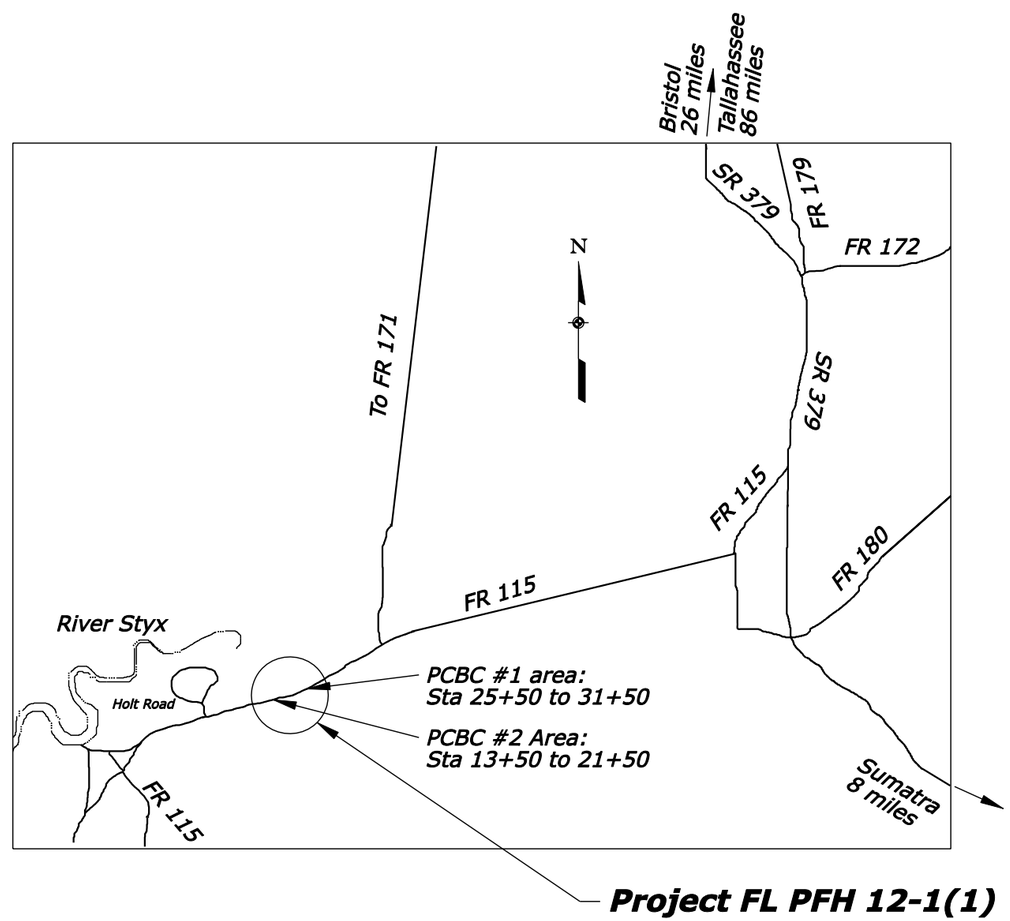

0 1.0 2
Scale in Miles

PLANS PREPARED BY
U.S. DEPARTMENT OF TRANSPORTATION
FEDERAL HIGHWAY ADMINISTRATION
EASTERN FEDERAL LANDS HIGHWAY DIVISION
STERLING, VIRGINIA

SUBMITTAL DATE: June 24, 2008

PROJECT MANAGER	LEAD DESIGNER
Arvind Patel	Jaime Torres

6/24/2008 4:44:00 PM N:\FL\FL PFH 12-1(1)\Roadway\sheets\EFL_Plan_Set\A_sht\A01-FL_PFH12-1(1)_TTL.dgn

REG	STATE	PROJECT	SHEET NO.
8	FL	FL PFH 12-1(1) River Styx Bridges	A2

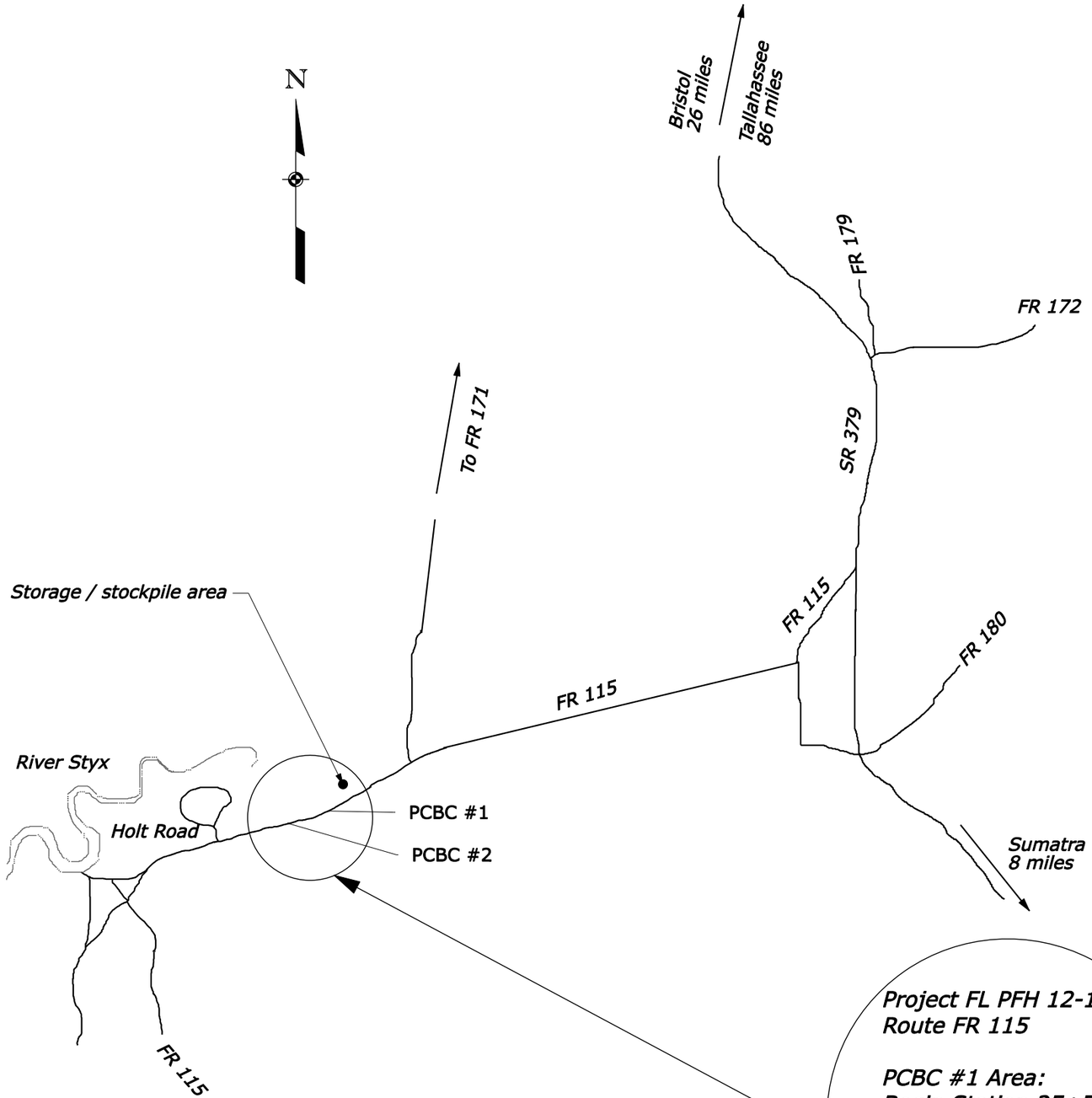

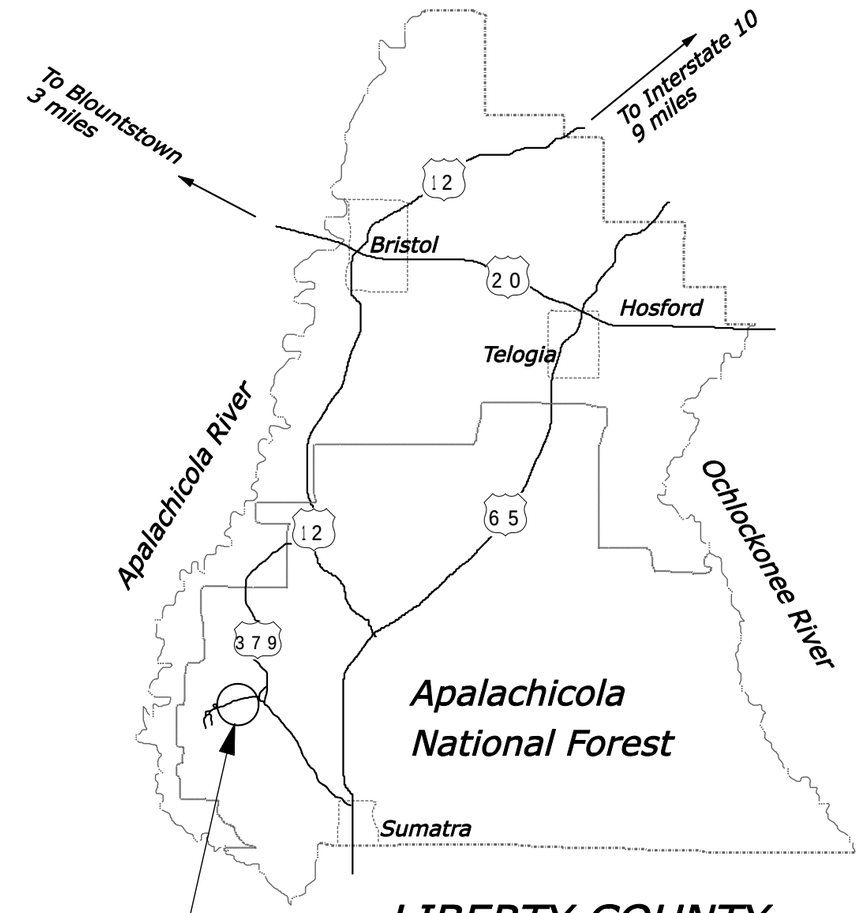

LIBERTY COUNTY
FLORIDA

NO SCALE

Project FL PFH 12-1(1)
Route FR 115

PCBC #1 Area:
Begin Station 25+50
End Station 31+50

PCBC #2 Area:
Begin Station 13+50
End Station 21+50

U.S. DEPARTMENT OF TRANSPORTATION
FEDERAL HIGHWAY ADMINISTRATION
CENTRAL FEDERAL LANDS HIGHWAY DIVISION

SITE MAP

6/24/2008 4:44:37 PM N:\FL\FL PFH 12-1(1)\Roadway\sheets\EFL_Plan_Set\A_sht\A02-FL_PFH12-1(1)_LOC.dgn

REG	STATE	PROJECT	SHEET NO.
8	FL	FL PFH 12-1(1) River Styx Bridges	A3

ABBREVIATIONS

	℄	centerline
	Δ	curve delta
A	abut.	abutment
	ADT	average daily traffic
	aggr.	aggregate
	AH	ahead
	alt.	alternate
	appr.	approach
	asph.	asphalt
B	b.f.	both faces
	beg.	beginning,begin
	BK	back
	BM	bench mark
	BP	balance point
	br.	bridge
	brg.	bearing
C	CBC	concrete box culvert
	c-c	center to center
	clr.	clear
	CMP	corrugated metal pipe
	Co.	county
	col.	column
	conc.	concrete
	constr.	construction
	constr. jt.	construction joint
	cont.	continuous
	corr.	corrugated
	cr.	creek
	CS	point of curve to spiral
	ctrs.	centers
	CTSM	contingent sum
	culv.	culvert
D	decr.	decrement
	DHV	design hour volume
	DI	drop inlet
	dia. or D	diameter
	diag.	diagonal
	diaph.	diaphragm
	dist.	distance
	Dist.	district
	DLC	donation land claim
	dwg(s).	drawing(s)
E	E	east
	e	superelevation rate
	El. 94.066	elevation with number
	elev.	elevation
	emb.	embankment
	engr(s).	Engineer(s)
	EOP	edge of pavement
	EQ or eq.	equation
	ER	edge of road
	et al	and others
	et ux	and wife
	EW	edge of water
	exc.	excavation
	exp. jt.	expansion joint
	ext.	exterior
F	f.f.	fill face
	Fed.	federal
	FES	flared end section
	fin.	finish
	ftg.	footing
G	ga.	gage (gauge)
	galv.	galvanized
	gdr.	girder
H	hdwl.	headwall
	HES	homestead entry survey
	hex.	hexagon
	horiz.	horizontal
	HW	high water
	hwy.	highway
I	ID	inside diameter
	incl.	inclusive,including
	incr.	increment
	int.	interior
J	jt.	joint
L	L	length of curve
	lam.	lamination
	lat.	latitude
	long.	longitudinal
	LPSM	lump sum
	Lt. or LT	left
	LW	low water
M	mag.	magnetic
	maint.	maintenance
	matl.	material
	max.	maximum
	min.	minimum
	mon.	monument
	mtn(s).	mountain(s)
N	N	north
	NC	normal crown
	neg.	negative
	no. or #	number
O	o.c.	on centers
	o.f.	other face
	OD	outside diameter
P	PC	point of curve
	PCC	point of compound curve
	perf.	perforate
	PI	point of intersection
	pl.	plate
	POC	point on curve
	POS	point on spiral
	POT	point on tangent
	proj.	project
	psi	pounds per square inch
	PT	point of tangent
	pvmt.	pavement
Q	quant., Qty	quantities
R	R	radius
	R.	range
	R/W	right-of-way
	rd.	road
	rdwy.	roadway
	reconst.	reconstruction
	reinf.	reinforcement
	reqd.	required
	res.	reservoir
	Res.	Reservation
	ret. wall	retaining wall
	RH	reference hub
	Rt. or RT	right
	rte.	route
S	S	south
	SADT	seasonal average daily traffic
	SC	point of spiral to curve
	sec.	section
	shldr.	shoulder
	spa.	spacing, Spaces or Spaced
	spec.	specification
	st.	street
	ST	point of spiral to tangent
	sta.	station
	std.	standard
	stiff.	stiffener
	str.	straight
	struc.	structural
	sym.	symmetrical
T	T	tangent length
	T.	township
	tan.	tangent
	TBM	temporary bench mark
	TCE	temporary construction easement
	transv.	transverse
	TS	point of tangent to spiral
	typ.	typical
V	V	design speed
	vert.	vertical
	vph	vehicles per hour
	VPI	vertical point of intersection
W	W	west

DRAINAGE SYMBOLS

Ditch (Existing, Proposed)

Flow Arrow

Drainage or Small Creek

Lake, Pond or Reservoir

Large Creek

Wetland

River

Spring

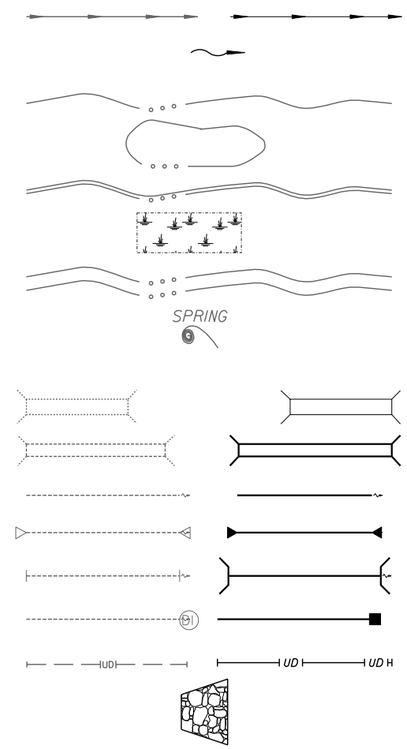

Bridge (Existing, Proposed)

Box Culvert (Existing, Proposed)

Pipe Culvert (Existing, Proposed)

With End Sections (Existing, Proposed)

With Headwalls (Existing, Proposed)

With Drop Inlet (Existing, Proposed)

Underdrain (Existing, Proposed)

Riprap Apron (Proposed)

EROSION CONTROL SYMBOLS

Mulching, Bonded Fiber Matrix

Check Dam

Diversion Berm

Erosion Control Mat

Riprap

Sediment Log at:

Culvert Inlet With End Section

Culvert Inlet With Head and/or Wing Walls

Ditch and/or Cut Slope

Drop Inlet

Slope Protection (Wattle)

Silt Fence

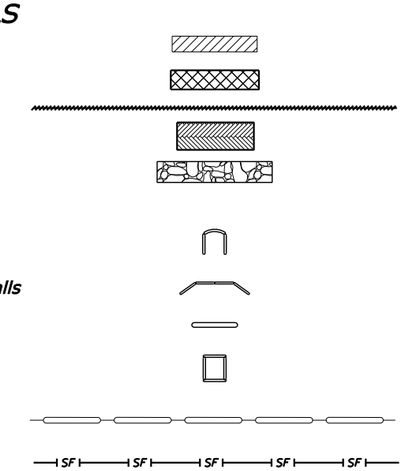

FENCE & CATTLEGUARD SYMBOLS

Fence (Existing, Proposed)

Fence w/ Gate (Existing, Proposed)

Cattleguard (Existing, Proposed)

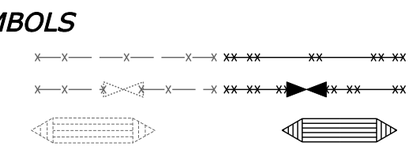

GEOLOGIC SYMBOLS

Boring Location (Existing, Proposed)

Material Source

U.S. DEPARTMENT OF TRANSPORTATION
FEDERAL HIGHWAY ADMINISTRATION
CENTRAL FEDERAL LANDS HIGHWAY DIVISION

U.S. CUSTOMARY

CONVENTIONAL PLAN SYMBOLS AND ABBREVIATIONS

Sheet 1 of 2

6/24/2008 4:45:05 PM N:\FL\FL PFH 12-1(1)\Roadway\sheets\EFL_Plan_Set\A_sht\A03-FL_PFH12-1(1)_SYM.dgn

REG	STATE	PROJECT	SHEET NO.
8	FL	FL PFH 12-1(1) River Styx Bridges	A4

LANDSCAPING & VEGETATION SYMBOLS

Tree

Treeline

MAPPING SYMBOLS

Building (Existing, Proposed)

Coordinate Grid Tick

North Arrow

Railroad
- Single Track
- Double Track

Spot Elevation — 999.9

Trail

Traverse Point (Horizontal & Vertical)

RIGHT-OF-WAY SYMBOLS

Boundaries
- National
- State
- County
- City
- Township or Range Line
- Section
- ¼ Section
- 1/16 Section
- Bureau of Indian Affairs
- Bureau of Land Management
- National Forest
- National Park — NP
- National Wildlife Refuge — NWR

Easements
- Construction & Maintenance — CME
- Permanent (Existing) — P/E
- Permanent (Proposed) — P/E
- Temporary (Proposed) — TCE

Monument (As described)

Parcel Number — 400

Property Line — P/L
Right-of-Way Line (Existing) — r/w
Right-of-Way Line (Proposed) — R/W

Section Corner (Found, Projected) — 36 31 1 6

¼ Section Corner (Found, Projected) — 15 22

1/16 Section Corner (Found) — 1/16

GUARDRAIL, BARRIER & WALL SYMBOLS

Guardrail (Existing, Proposed)

Guardwall (Existing, Proposed)

Median & Side Barrier (Existing, Proposed)

Retaining Wall (Existing, Proposed)

ROADWAY SYMBOLS

Clearing/Construction Limits

Slope Stake Limits
- Top of Cut
- Transition
- Toe of Fill

Edge of Roadway
- Existing
- Proposed

Roadway Centerline (With Station ticks)

Roadway Obliteration

SIGN SYMBOLS

Signs
- Commercial (Existing, Proposed)
- Delineator (Existing, Proposed)
- Portable (Proposed)
- Post Mounted (Existing, Proposed)

UTILITY SYMBOLS

Irrigation Ditch
- Underground (Existing, Proposed) — IRR
- Surface (Existing, Proposed) — IRR

Support Pole (Existing, Proposed)

Support Pole Anchor (Existing, Proposed)

Street Light (Existing, Proposed)

Telephone Booth (Existing, Proposed) — TB

Telephone Pedestal (Existing, Proposed) — TP

Underground Utility (Existing, Proposed)
- CATV — TV
- Fiber Optic — FO
- Gas — G
- Oil — O
- Power — P
- Sanitary Sewer — SS
- Telephone — T
- Water — W

Overhead Utility Line (Existing, Proposed)
- CATV — TV
- Fiber Optic — FO
- Power — P
- Telephone — T

MISCELLANEOUS SYMBOLS

See Note 4 — 4

PROJECT SPECIFIC SYMBOLS

Precast Concrete Box Culvert — PCBC

U.S. DEPARTMENT OF TRANSPORTATION
FEDERAL HIGHWAY ADMINISTRATION
CENTRAL FEDERAL LANDS HIGHWAY DIVISION

U.S. CUSTOMARY

CONVENTIONAL PLAN SYMBOLS AND ABBREVIATIONS

Sheet 2 of 2

6/24/2008 4:45:28 PM N:\FL\FL PFH 12-1(1)\Roadway\sheets\EFL_Plan_Set\A_sht\A04-FL_PFH12-1(1)_SYM.dgn

REG	STATE	PROJECT	SHEET NO.
8	FL	FL PFH 12-1(1) River Styx Bridges	A5

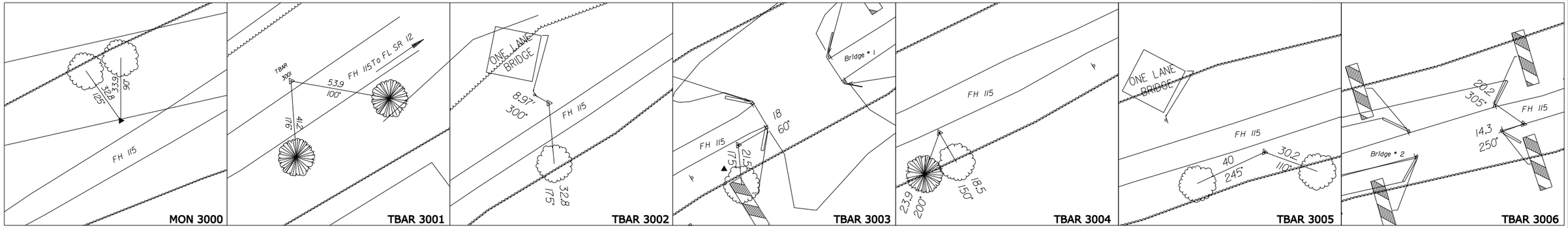

Coordinate System
Coordinate System: US State Plane 1983(at ground)
Zone: Florida North 0903
Datum: NAD 1983 (Conus)
Ellipsoid Name: Geodetic Ref System 1980
Geoid Model: GEOID03 (Conus)
Grnd scale factor: 0.9997891230

Point	Northing	Easting	Elev.	Remarks
3000	401614.435	1780134.022	25.817	MON
3001	401683.866	1780244.022	27.017	TBAR
3002	401450.439	1779888.301	22.703	TBAR
3003	401299.924	1779690.794	24.173	TBAR
3004	401146.764	1779389.695	22.545	TBAR
3005	401002.936	1778998.703	20.736	TBAR
3006	400917.413	1778692.752	24.647	TBAR

NOTE:

1. *Angles shown are azimuth angles unless otherwise noted.*
2. *Distances are in feet unless otherwise noted.*

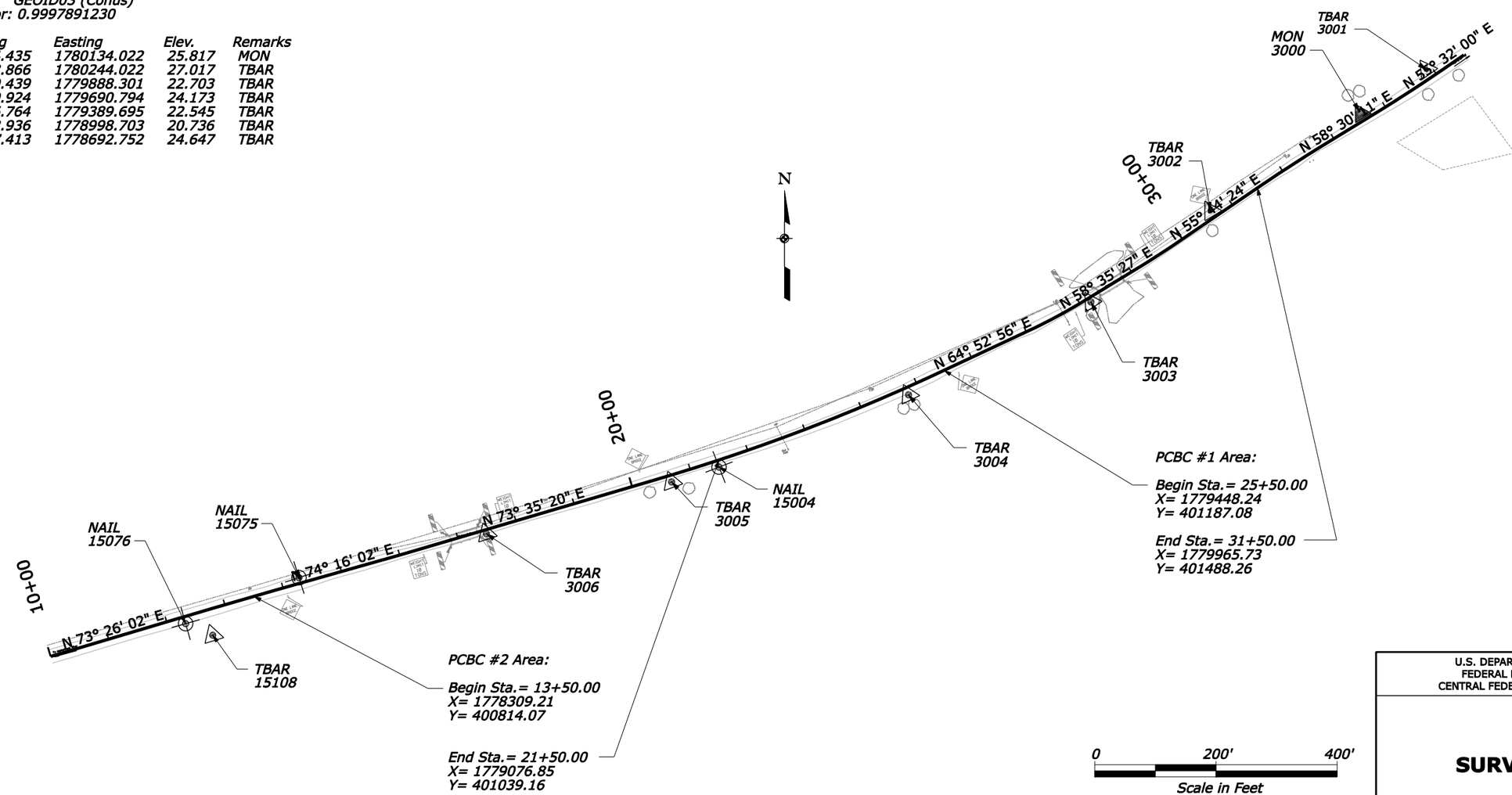

U.S. DEPARTMENT OF TRANSPORTATION
FEDERAL HIGHWAY ADMINISTRATION
CENTRAL FEDERAL LANDS HIGHWAY DIVISION

SURVEY CONTROL

7/10/2008 3:06:28 PM N:\FL\FL PFH 12-1(1)\Roadway\sheets\EFL_Plan_Set\A_sht\A05-FL_PFH12-1(1)_SURbak.dgn

REG	STATE	PROJECT	SHEET NO.
8	FL	FL PFH 12-1(1) River Styx Bridges	B1

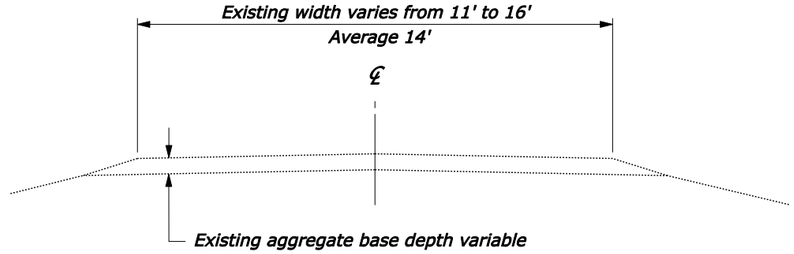

EXISTING TYPICAL SECTION

LENGTH OF PROJECT

Station to Station	Roadway (ft)
13+50 to 21+50	800
25+50 to 31+50	600
TOTALS (ft)	1400
TOTAL (mi)	0.27

NOTE:

1. The excavation and embankment slope ratios may be adjusted by the contracting officer to assure adequate drainage and stability.
2. See the cross sections for cut and fill slope ratios.
3. Clear zone width varies on the outside of curves according to the AASHTO Roadside Design Guide.
4. Place earthwork geotextile, type II-B from sta. 14+89.70 to sta. 19+31.70 & from sta. 26+43.83 to sta. 30+85.83.

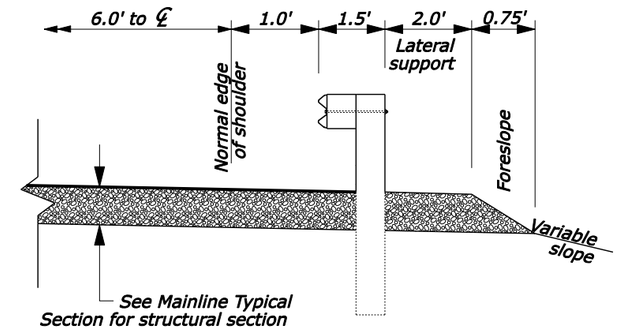

TYPICAL GUARDRAIL SECTION

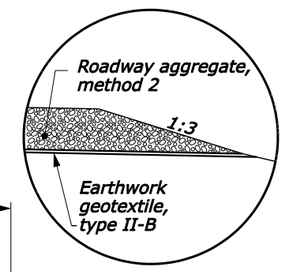

DETAIL A

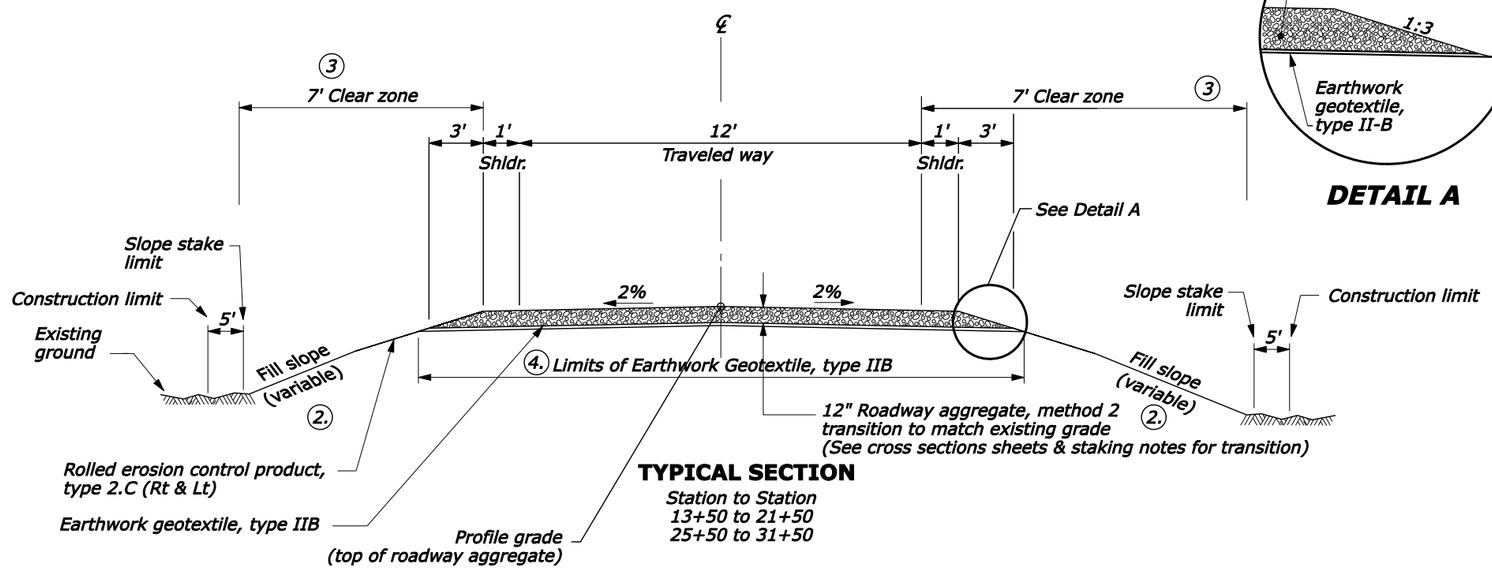

TYPICAL SECTION

Station to Station
13+50 to 21+50
25+50 to 31+50

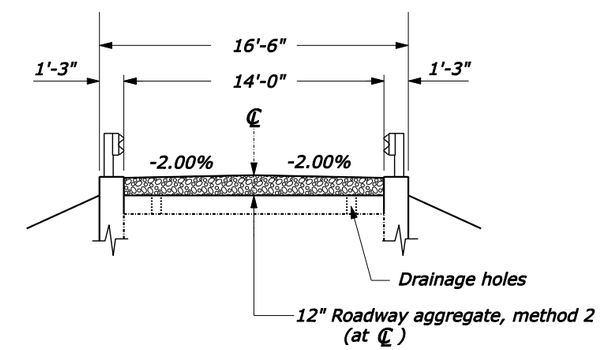

TYPICAL SECTION AT BOX CULVERT

16+89.70 to 17+31.70
28+43.83 to 28+85.83

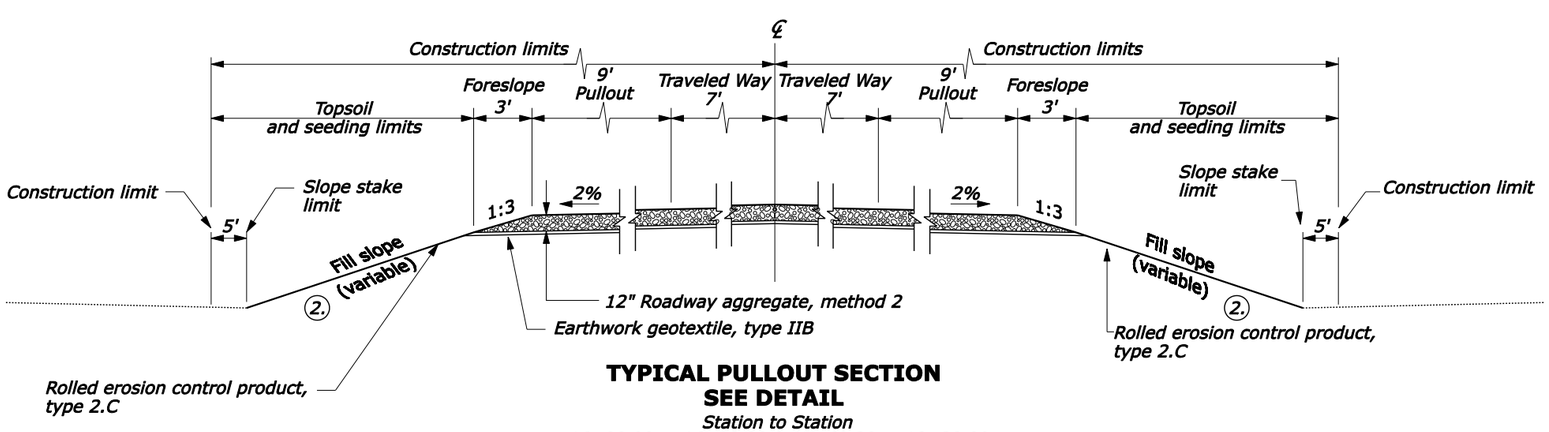

TYPICAL PULLOUT SECTION SEE DETAIL

Station to Station
16+00.00 to 16+52.20 & 17+69.20 to 18+20.00
27+56.00 to 28+05.71 & 29+23.40 to 29+74.00

NO SCALE

U.S. DEPARTMENT OF TRANSPORTATION
FEDERAL HIGHWAY ADMINISTRATION
CENTRAL FEDERAL LANDS HIGHWAY DIVISION

TYPICAL SECTIONS MAINLINE

6/24/2008 4:46:33 PM N:\FL\FL PFH 12-1(1)\Roadway\sheets\EFL_Plan_Set\B_SHT\B01-FL_PFH12-1(1)_TYP.dgn

REG	STATE	PROJECT	SHEET NO.
8	FL	FL PFH 12-1(1) River Styx Bridges	C1

ITEM NO.	ITEM DESCRIPTION	UNIT	Sheet Number and Description				ESTIMATED QUANTITIES		REMARKS AND/OR DETERMINATION OF ESTIMATED QUANTITY
			C2	C3	C4	C5			
			SUMMARIES	SUMMARIES	SUMMARIES	EARTHWORK SUMMARY	PLAN	BID	
15101-0000	MOBILIZATION	LPSM					ALL	ALL	
15201-0000	CONSTRUCTION SURVEY AND STAKING	LPSM					ALL	ALL	
15401-0000	CONTRACTOR TESTING	LPSM					ALL	ALL	
15705-0100	SOIL EROSION CONTROL, SILT FENCE	LNFT	2690				2690	2,700	
15705-2000	SOIL EROSION CONTROL, TURBIDITY BARRIER	LNFT	355				355	400	
20101-0000	CLEARING AND GRUBBING	ACRE	1.23				1.23	1.3	
20301-0400	REMOVAL OF BRIDGE	EACH					2	2	
20301-2400	REMOVAL OF SIGN	EACH			16		16	16	
20401-0000	ROADWAY EXCAVATION	CUYD				100	100	125	
20410-0000	SELECT BORROW	CUYD				3677	3677	3900	
20701-0800	EARTHWORK GEOTEXTILE, TYPE II-B	SQYD	2300				2300	2500	
20801-0000	STRUCTURE EXCAVATION	CUYD		558			558	600	
20803-0000	STRUCTURAL BACKFILL	CUYD		128			128	150	
30802-2000	ROADWAY AGGREGATE, METHOD 2	TON	1721				1721	1800	
55201-0200	STRUCTURAL CONCRETE, CLASS A (AE)	CUYD		132			132	135	
55601-0900	BRIDGE RAILING, STEEL	LNFT		168			168	168	
60223-4050	12 FEET SPAN, 8 FEET RISE REINFORCED CONCRETE BOX CULVERT, TRIPLE BARREL	LNFT		28			28	32	
61702-1200	TERMINAL SECTION, TYPE LST	EACH		8			8	8	
61707-1000	STRUCTURE TRANSITION RAILING, G4 SYSTEM	LNFT		200			200	220	
62201-2750	MOTOR GRADER	HOUR					40	40	To maintain detour roads, as directed by CO
62511-2000	SEEDING, HYDRAULIC METHOD	SQYD	2050				2050	2500	
62901-0700	ROLLED EROSION CONTROL PRODUCT, TYPE 2.C	SQYD	2050				2050	2500	
63301-0000	SIGN SYSTEM	EACH			8		8	8	
63502-0600	TEMPORARY TRAFFIC CONTROL, BARRICADE TYPE 3	EACH		4			4	4	
63502-1500	TEMPORARY TRAFFIC CONTROL, WARNING LIGHT TYPE A	EACH		8			8	10	
63504-1000	TEMPORARY TRAFFIC CONTROL, CONSTRUCTION SIGN	SQFT		151			151	151	
63701-0000	FIELD OFFICE	EACH					1	1	

The following quantities are approximate unless noted as a contract quantity. Payment will be made for the actual quantities of work performed and accepted or for materials furnished according to the contract.

U.S. DEPARTMENT OF TRANSPORTATION
FEDERAL HIGHWAY ADMINISTRATION
CENTRAL FEDERAL LANDS HIGHWAY DIVISION

SUMMARY OF QUANTITIES

7/10/2008 3:07:46 PM N:\FL\FL PFH 12-1(1)\Roadway\sheets\EFL_Plan_Set\C_SHT\C01-05-FL_PFH12-1(1)_QNT.dgn

REG	STATE	PROJECT	SHEET NO.
8	FL	FL PFH 12-1(1) River Styx Bridges	C2

ITEM NO. 15201-0000; CONSTRUCTION SURVEYING AND STAKING [LPSM] SUMMARY

LOCATION			SLOPE, REFERENCE, AND CLEARING AND GRUBBING STAKE	SURVEY AND STAKING, BOX CULVERT	SURVEY AND STAKING, GRADE FINISHING STAKES
			STA	EACH	STA
13+50.00	to	21+50.00	8.0		8.0
25+50.00	to	31+50.00	6.0		6.0
PCBC #2		17+10.70		1.0	
PCBC #1		28+64.83		1.0	
TOTALS			**14.0**	**2.0**	**14.0**

CLEARING AND GRUBBING, SEEDING, AND ROLLED EROSION SUMMARIES

DESCRIPTION			20101-0000	62511-2000	62901-0700
			CLEARING AND GRUBBING	SEEDING, HYDRAULIC METHOD	ROLLED EROSION CONTROL PRODUCT, TYPE 2.C
Unit			ACRE	SQYD	SQYD
13+50.00	to	21+50.00	0.78	1400	1400
28+50.00	to	31+50.00	0.45	650	650
Total			**1.23**	**2050**	**2050**

EROSION CONTROL SUMMARY

LOCATION			SIDE	15705-0100	15705-2000
				SOIL EROSION CONTROL, SILT FENCE	SOIL EROSION CONTROL, TURBIDITY BARRIER
				LNFT	LNFT
13+50.00	to	16+79.00	rt	350	
			lt	350	
16+75.00	to	17+50.00	rt		80
			lt		85
17+42.00	to	21+50.00	rt	430	
			lt	430	
25+50.00	to	28+34.00	rt	300	
			rt	300	
28+26.00	to	29+00.00	rt		80
28+00.00	to	29+00.00	lt		110
28+95.00	to	31+50.00	rt	260	
			lt	270	
TOTALS				**2690**	**355**

GEOTEXTILE SUMMARY

DESCRIPTION			20701-0800	REMARKS
			EARTHWORK GEOTEXTILE, TYPE II-B	
Unit			SQYD	
14+89.70	to	16+89.70	500	
16+89.70	to	17+31.70	150	PCBC (Delineating structural backfill) See Plan and Profile Sheets
17+31.70	to	19+31.70	500	
26+43.83	to	28+43.83	500	
28+43.83	to	28+85.83	150	PCBC (Delineating structural backfill) See Plan and Profile Sheets
28+85.83	to	30+85.83	500	
Total			**2300**	

SURFACING QUANTITIES SUMMARY

DESCRIPTION			30802-2000
			ROADWAY AGGREGATE, METHOD 2
Unit			TON
13+50.00	to	21+50.00	981
25+50.00	to	31+50.00	740
Total			**1721**

VALUE USED FOR ESTIMATING PURPOSE	
AGGREGATE BASE:	139 lb/ft^3

U.S. DEPARTMENT OF TRANSPORTATION
FEDERAL HIGHWAY ADMINISTRATION
CENTRAL FEDERAL LANDS HIGHWAY DIVISION

SUMMARIES

7/10/2008 3:08:14 PM N:\FL\FL PFH 12-1(1)\Roadway\sheets\EFL_Plan_Set\C_SHT\C01-05-FL_PFH12-1(1)_QNT.dgn

PRECAST CONCRETE BOX CULVERT SUMMARY

LOCATION		60223-4050	55201-0200	20801-0000	20803-0000
		12 FEET SPAN, 8 FEET RISE REINFORCED CONCRETE BOX CULVERT, TRIPLE BARREL	STRUCTURAL CONCRETE, CLASS A (AE)	STRUCTURE EXCAVATION	STRUCTURAL BACKFILL
		LNFT	CUYD	CUYD	CUYD
PCBC #2	17+10.70	14	66	270	64
PCBC #1	28+64.83	14	66	288	64
TOTALS		**28**	**132**	**558**	**128**

Concrete Notes: Wingwalls @ 9 CUYD each
Headwalls @ 15 CUYD each

GUARDRAIL & PCBC RAILING SUMMARY

LOCATION			SIDE	55601-0900	61707-1000	61702-1200
				BRIDGE RAILING, STEEL	STRUCTURE TRANSITION RAILING, G4 SYSTEM	TERMINAL SECTION, TYPE LST
				LNFT	LNFT	EACH
16+52.70	to	16+64.70	rt & lt			2
16+64.70	to	16+89.70	rt & lt		50	
16+89.70	to	17+31.70	rt & lt	84		
17+31.70	to	17+56.70	rt & lt		50	
17+56.70	to	17+68.70	rt & lt			2
28+06.83	to	28+18.83	rt & lt			2
28+18.83	to	28+43.83	rt & lt		50	
28+43.83	to	28+85.83	rt & lt	84		
28+85.83	to	29+10.83	rt & lt		50	
29+10.83	to	29+22.83	rt & lt			2
TOTALS				**168**	**200**	**8**

TEMPORARY CONSTRUCTION SIGN SUMMARY

MUTCD CODE	DESCRIPTION (MESSAGE)	QTY	DIMENSIONS [in. x in.]	AREA [SQFT]
R11-2	ROAD CLOSED	2	48x30	20
R11-2	BRIDGE OUT	2	48x30	20
W20-3	ROAD CLOSED (2.1MI)	1	36x36	9
W20-3	ROAD CLOSED AHEAD	2	36x36	18
As ordered by CO		4	30x36	30
		6	36x36	54
TOTAL				**151**

TEMPORARY TRAFFIC CONTROL SUMMARY

ITEM NUMBER	DESCRIPTION	UNIT	QUANTITY
63502-0600	TEMPORARY TRAFFIC CONTROL, BARRICADE TYPE 3	EACH	4
63502-1500	TEMPORARY TRAFFIC CONTROL, WARNING LIGHT TYPE A	EACH	8
63504-1000	TEMPORARY TRAFFIC CONTROL, CONSTRUCTION SIGN	SQFT	151

U.S. DEPARTMENT OF TRANSPORTATION
FEDERAL HIGHWAY ADMINISTRATION
CENTRAL FEDERAL LANDS HIGHWAY DIVISION

SUMMARIES

6/24/2008 4:48:13 PM N:\FL\FL PFH 12-1(1)\Roadway\sheets\EFL_Plan_Set\C_SHT\C01-05-FL_PFH12-1(1)_QNT.dgn

REG	STATE	PROJECT	SHEET NO.
8	FL	FL PFH 12-1(1) River Styx Bridges	C4

PERMANENT TRAFFIC CONTROL SUMMARY

LOCATION	DESCRIPTION, MUTCD CODE	ITEM NO. / DIMENSIONS [in. x in.]	63301-0000 SIGN SYSTEM (EACH)	20301-2400 REMOVAL OF SIGN (EACH)	REMARKS
14+03	ONE LANE BRIDGE			1	
15+00 rt	ONE LANE BRIDGE, W5-3	36x36	1		
16+38	WEIGHT LIMIT 10 TONS			1	
16+65 rt	YIELD, R1-2	36x36x36	1		Mounted on one post
	TO ONCOMING TRAFFIC, R1-2a	24x12			
16+88	OBJECT MARKER			2	
17+35	OBJECT MARKER			2	
17+58 lt	YIELD, R1-2	36x36x36	1		Mounted on one post
	TO ONCOMING TRAFFIC, R1-2a	24x12			
17+76	WEIGHT LIMIT 10 TONS			1	
19+00 lt	ONE LANE BRIDGE, W5-3	36x36	1		
20+20	ONE LANE BRIDGE			1	
25+65	ONE LANE BRIDGE			1	
26+50 rt	ONE LANE BRIDGE, W5-3	36x36	1		
27+85	WEIGHT LIMIT 10 TONS			1	
28+17 rt	YIELD, R1-2	36x36x36	1		Mounted on one post
	TO ONCOMING TRAFFIC, R1-2a	24x12			
28+35	OBJECT MARKER			2	
28+83	OBJECT MARKER			2	
29+10 lt	YIELD, R1-2	36x36x36	1		Mounted on one post
	TO ONCOMING TRAFFIC, R1-2a	24x12			
29+42	WEIGHT LIMIT 10 TONS			1	
30+50 lt	ONE LANE BRIDGE, W5-3	36x36	1		
30+60	ONE LANE BRIDGE			1	
TOTAL			**8**	**16**	

U.S. DEPARTMENT OF TRANSPORTATION
FEDERAL HIGHWAY ADMINISTRATION
CENTRAL FEDERAL LANDS HIGHWAY DIVISION

SUMMARIES

6/24/2008 4:48:31 PM N:\FL\FL PFH 12-1(1)\Roadway\sheets\EFL_Plan_Set\C_SHT\C01-05-FL_PFH12-1(1)_QNT.dgn

REG	STATE	PROJECT	SHEET NO.
8	FL	FL PFH 12-1(1) River Styx Bridges	C5

	Roadway Excavation		Adjustments To Excavation		Roadway Embankment		Mass Haul		
Pay Item		20401-0000							20410-0000
Station to Station	Roadway Prism	Roadway Excavation	Average Shrink/ Swell Factor(4)	Total Excavation Available for Fills	Roadway Prism	Total Embankment	Excavation - Embankment	Mass Ordinate	Select Borrow
Definition	(BCY)	(BCY)		(CCY)	(CCY)	(CCY)	(CCY)	(CCY)	(yd^3)
13+50.00 - 21+50.00	4	4	0.90	4	2022	2022	-2018	-2,018	2018
25+50.00 - 31+50.00	83	83	0.90	75	1734	1734	-1659	-3,678	1659
Totals	**87**	**87**		**79**	**3756**	**3756**			**3677**

NOTES:

1. BCY = Bank Cubic Yard = One cubic yard of material as it lies in natural bank state.

2. CCY = Compacted Cubic Yard = One cubic yard of material after it has been compacted to specification density.

3. The quantities shown herein are approximations. Payment will be made for the actual quantities of work performed and accepted.

4. The average shrink/swell factor shown is computed by taking an average of values over the specified station range.
Recommended shrink/swell factors are used in the calculations. See Geotech Report for recommended shrink/swell values.

U.S. DEPARTMENT OF TRANSPORTATION
FEDERAL HIGHWAY ADMINISTRATION
CENTRAL FEDERAL LANDS HIGHWAY DIVISION

EARTHWORK SUMMARY

6/25/2008 11:29:30 AM N:\FL\FL PFH 12-1(1)\Roadway\sheets\EFL_Plan_Set\C_SHT\C01-05-FL_PFH12-1(1)_QNT.dgn

REG	STATE	PROJECT	SHEET NO.
8	FL	FL PFH 12-1(1) River Styx Bridges	D1

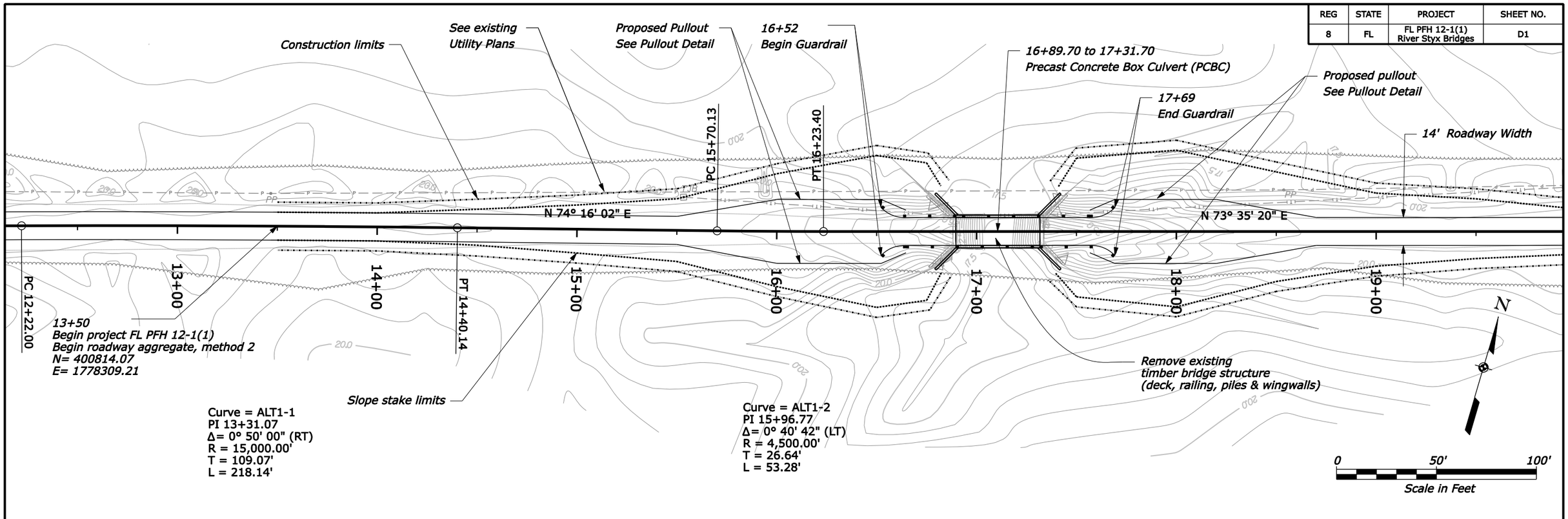

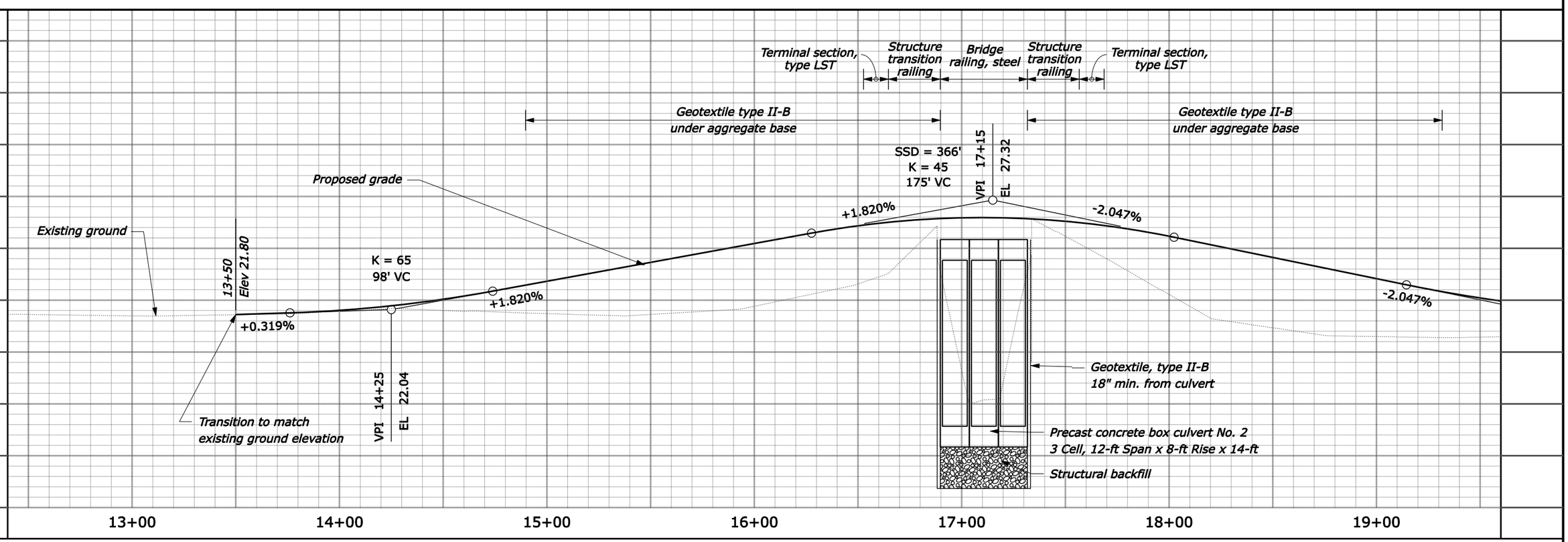

N:\FL\FL PFH 12-1(1)\Roadway\sheets\EFL_Plan_Set\D_SHT\D01-FL_PFH12-1(1)_P&P.dgn 3:08:58 PM 7/10/2008

REG	STATE	PROJECT	SHEET NO.
8	FL	FL PFH 12-1(1) River Styx Bridges	D2

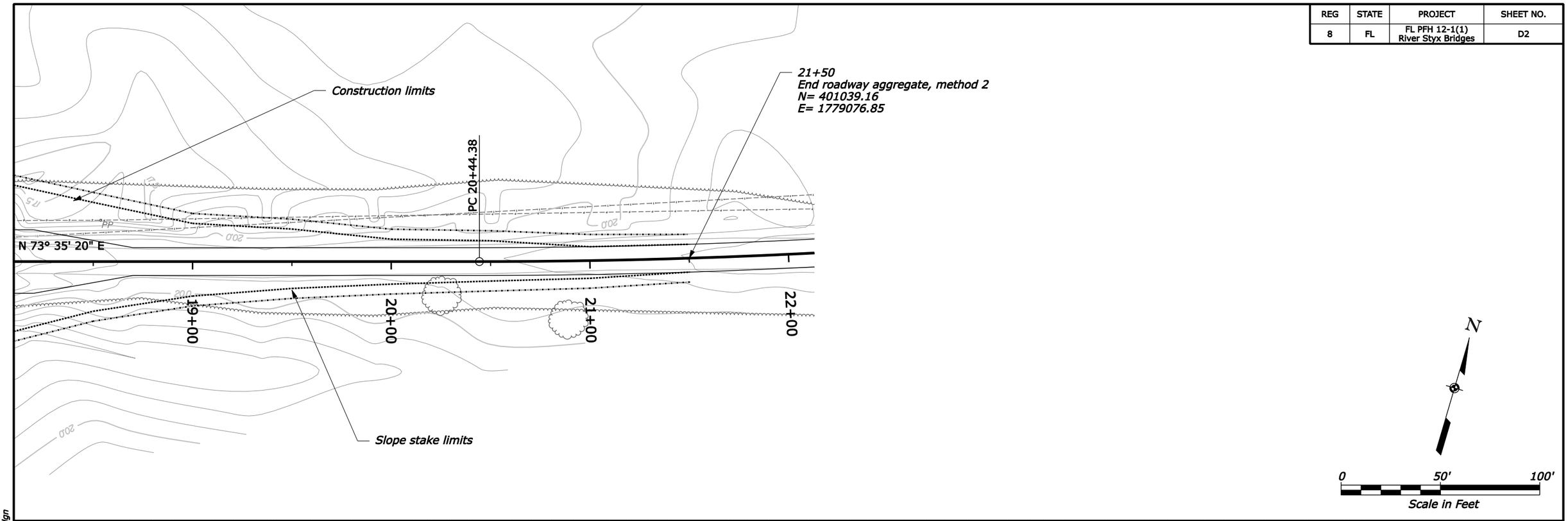

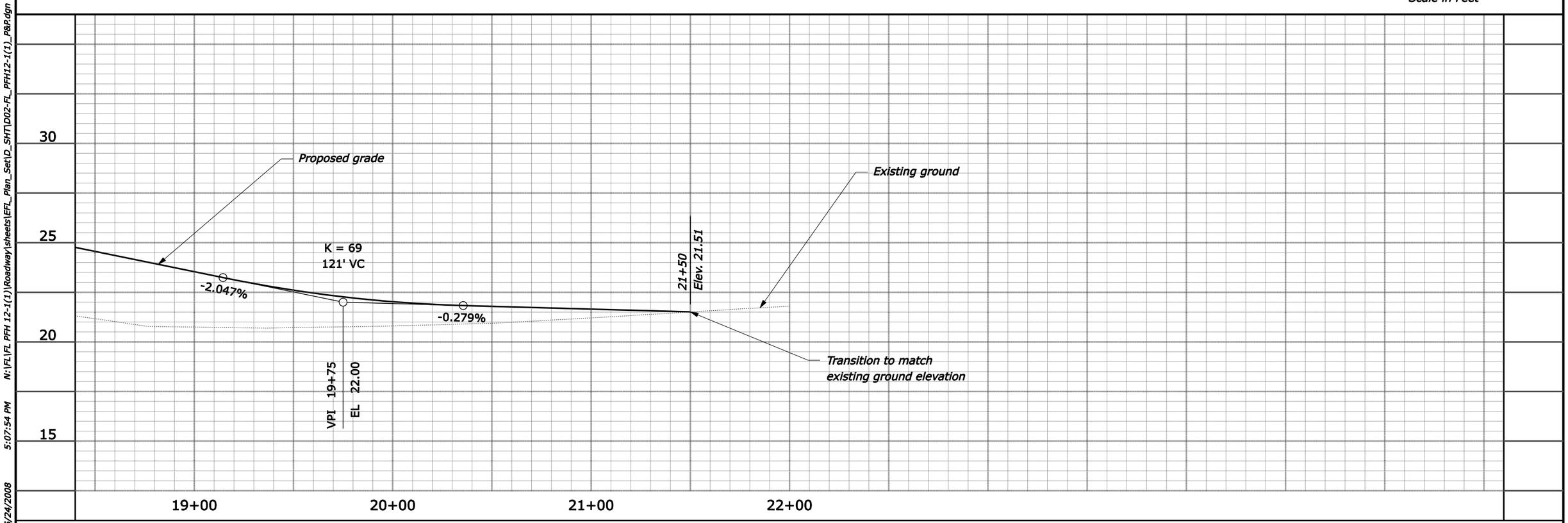

N:\FL\FL PFH 12-1(1)\Roadway\sheets\EFL_Plan_Set\D_SHT\D02-FL_PFH12-1(1)_P&P.dgn 5:07:54 PM 6/24/2008

REG	STATE	PROJECT	SHEET NO.
8	FL	FL PFH 12-1(1) River Styx Bridges	D3

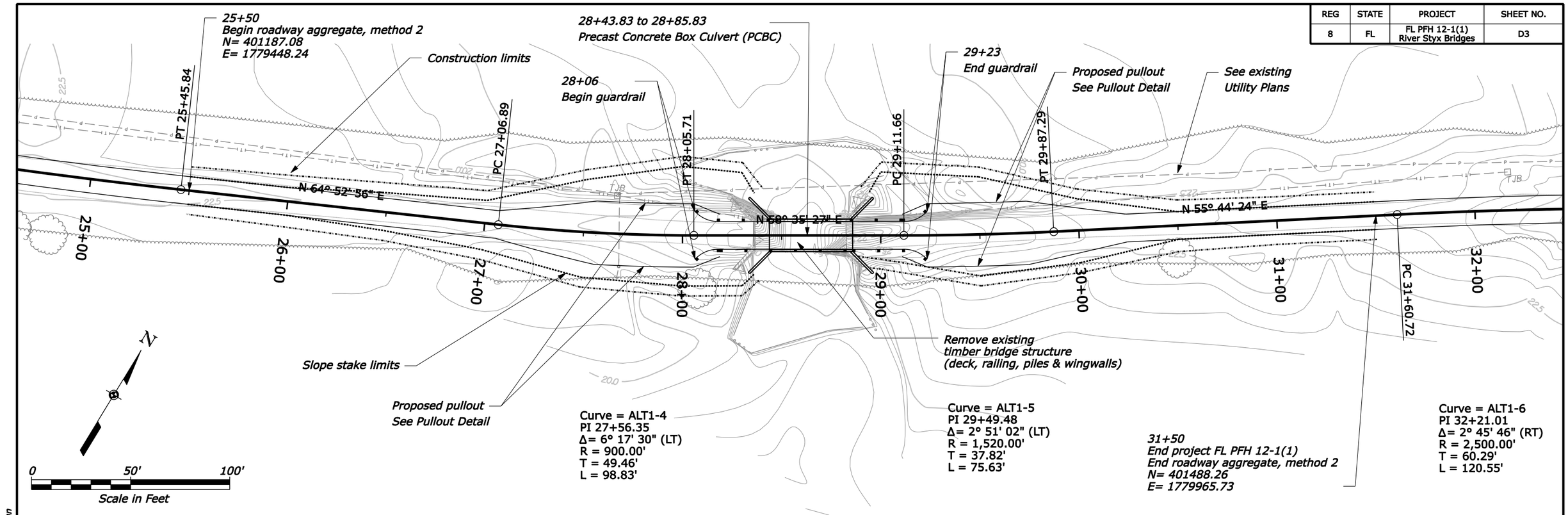

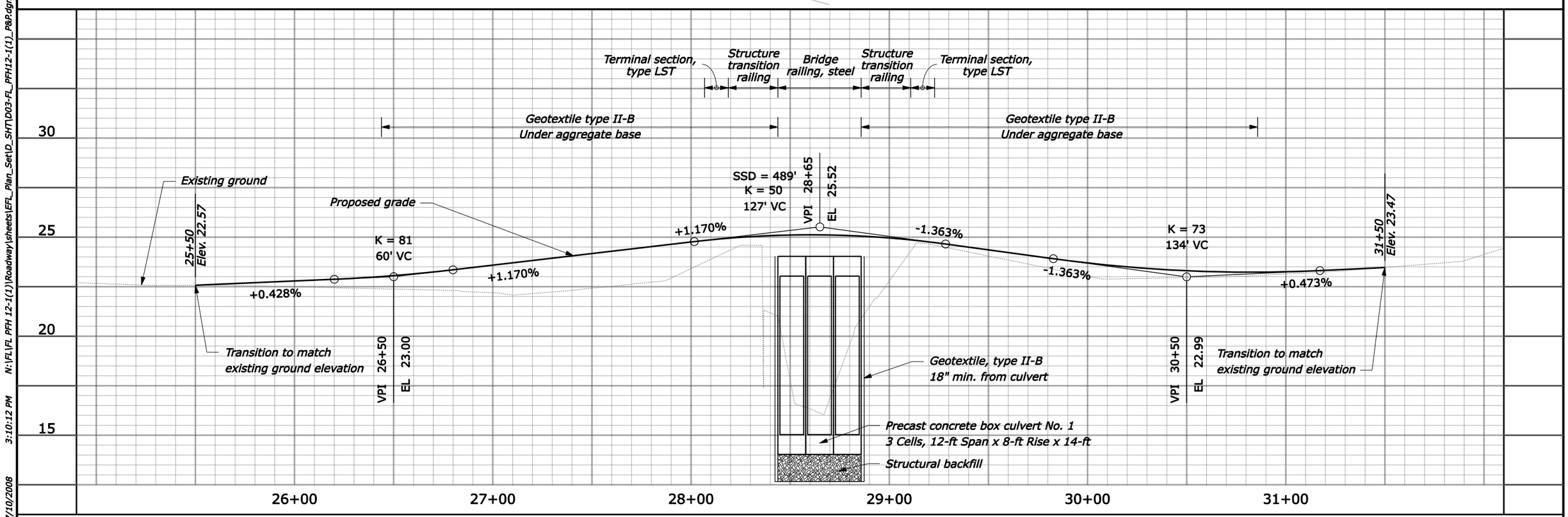

N:\FL\FL PFH 12-1(1)\Roadway\sheets\EFL_Plan_Set\D_SHT\D03-FL_PFH12-1(1)_P&P.dgn 3:10:12 PM 7/10/2008

REG	STATE	PROJECT	SHEET NO.
8	FL	FL PFH 12-1(1) River Styx Bridges	D4

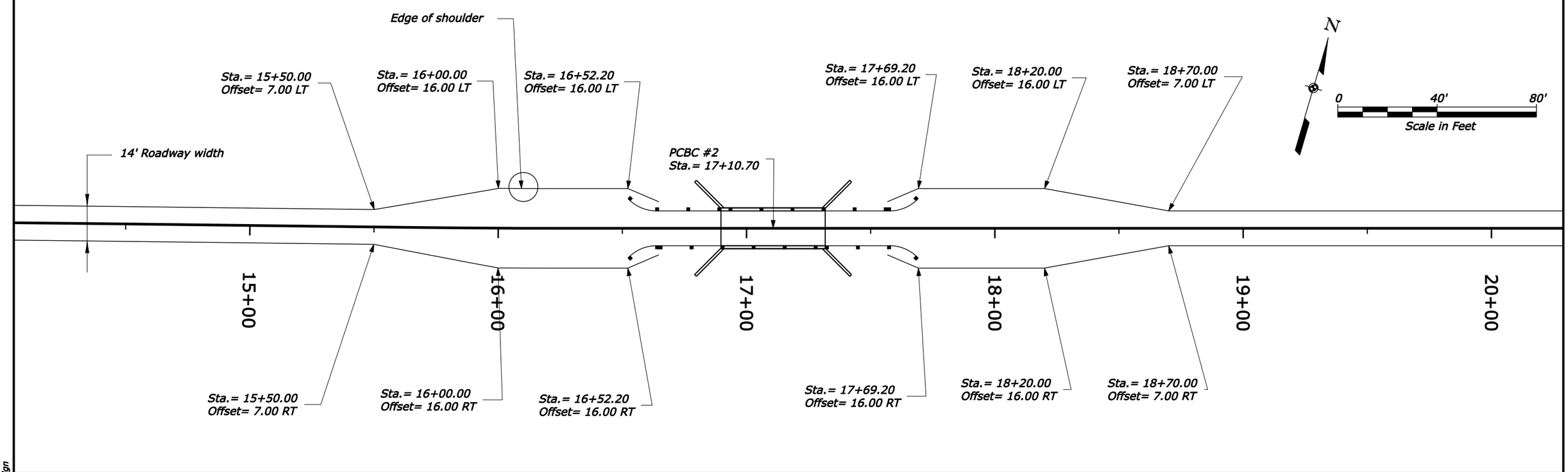

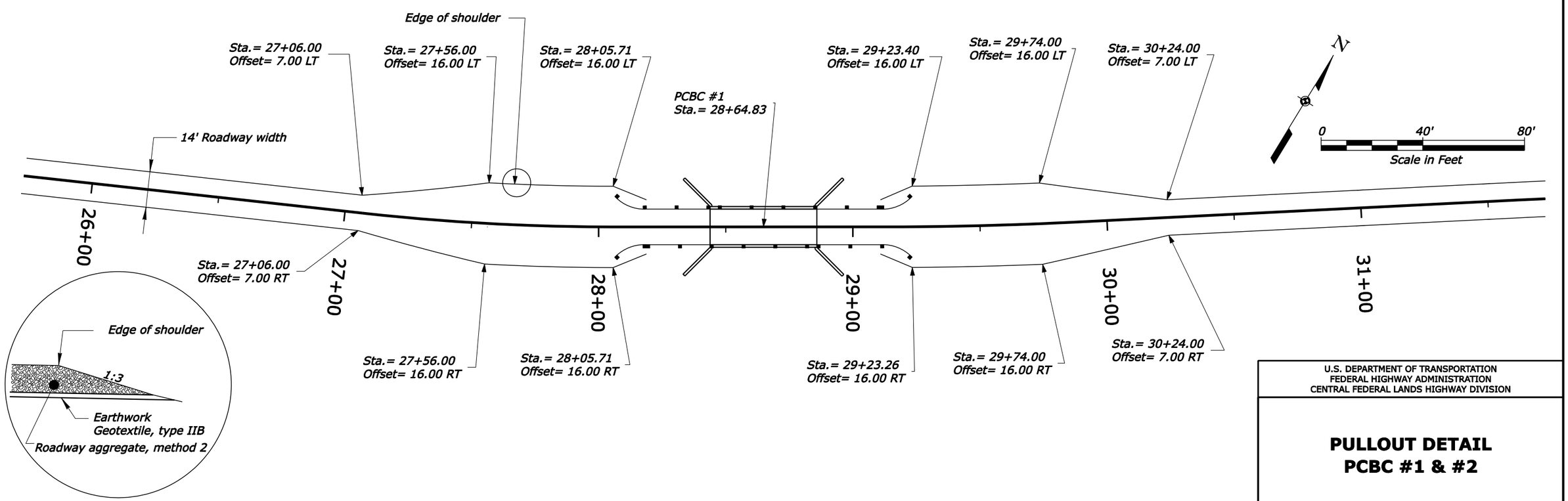

U.S. DEPARTMENT OF TRANSPORTATION
FEDERAL HIGHWAY ADMINISTRATION
CENTRAL FEDERAL LANDS HIGHWAY DIVISION

PULLOUT DETAIL
PCBC #1 & #2

6/24/2008 5:09:08 PM N:\FL\FL PFH 12-1(1)\Roadway\sheets\EFL_Plan_Set\D_SHT\D04-FL_PFH12-1(1)_POP.dgn

REG	STATE	PROJECT	SHEET NO.
8	FL	FL PFH 12-1(1) River Styx Bridges	D5

PRECAST CONCRETE BOX CULVERT
3 Cells, 12-ft Span x 8-ft Rise

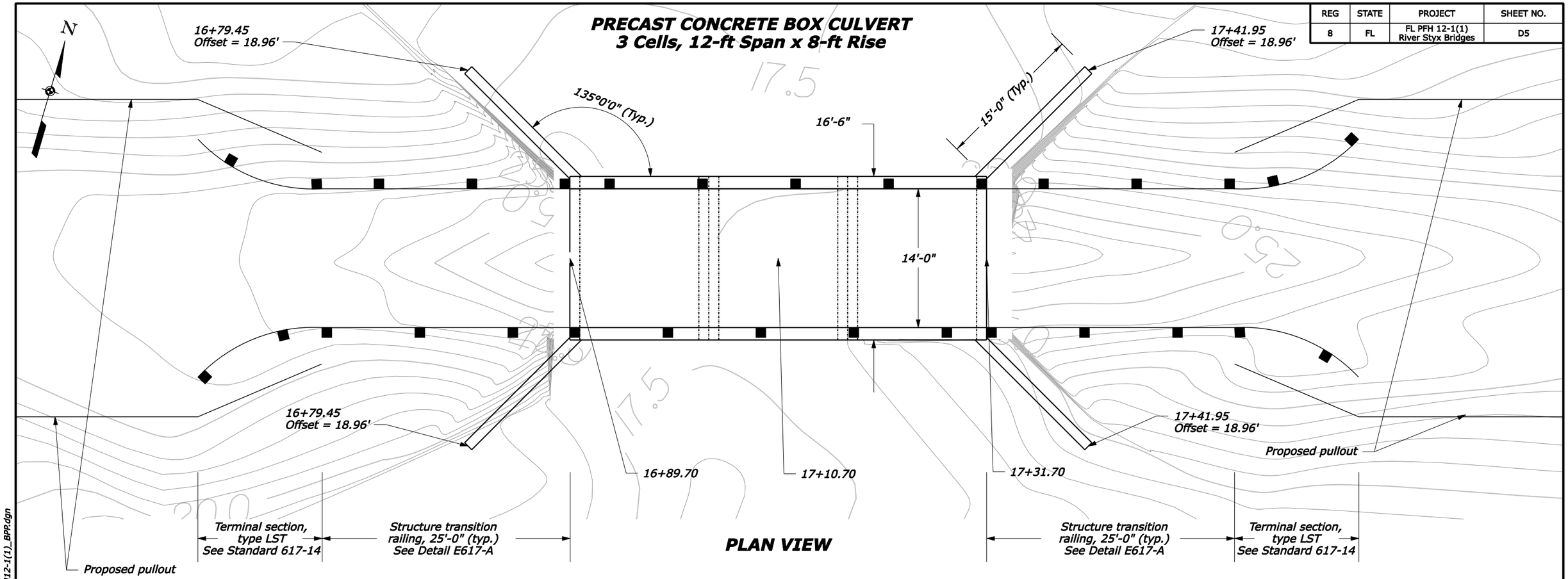

PLAN VIEW

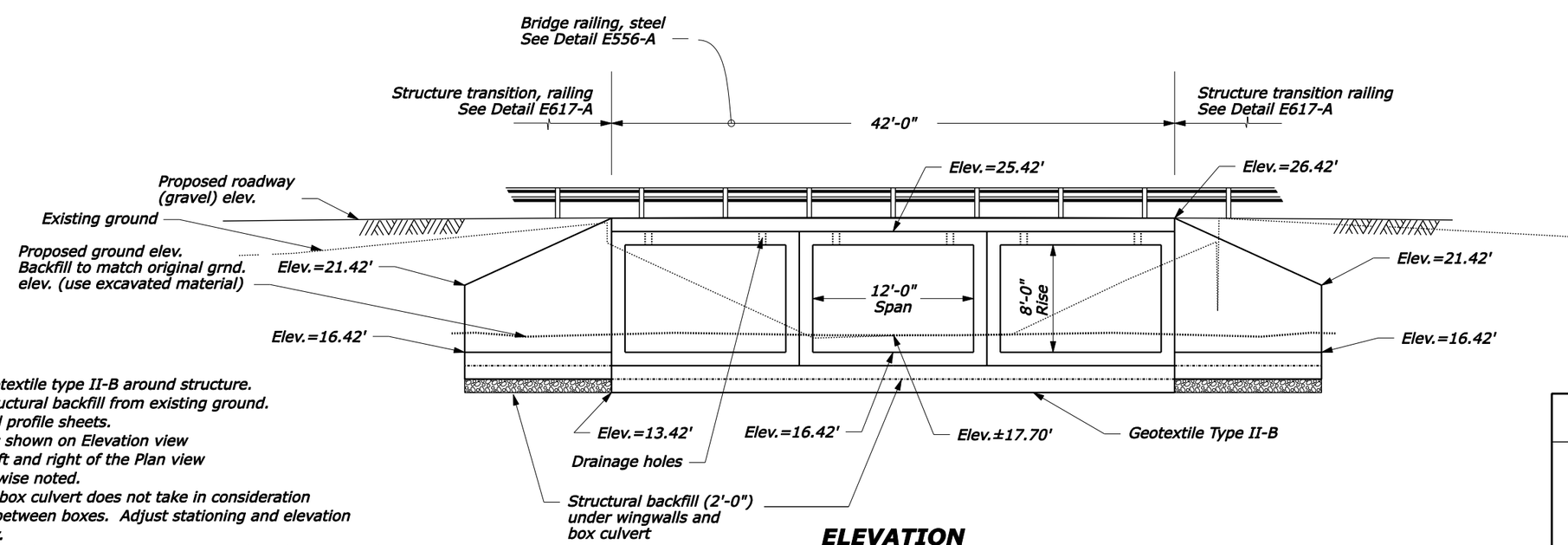

ELEVATION

	Q [ft³/s]	Vm [ft/s]	WS ELV. [ft]
Q_2	20.3	0.75	18.38
Q_{50}	35	0.937	18.57
Q_{100}	37	0.958	18.6

0 10' 20'
Scale in Feet

NOTE:
1. Place geotextile type II-B around structure. Separate structural backfill from existing ground. See plan and profile sheets.
2. Elevations shown on Elevation view are equal left and right of the Plan view unless otherwise noted.
3. Layout of box culvert does not take in consideration fill material between boxes. Adjust stationing and elevation as necessary.
4. Allowable soil bearing pressure is 2,000 psf. To be evaluated by a geotechnical engineer immediately prior to the placement of concrete.

U.S. DEPARTMENT OF TRANSPORTATION
FEDERAL HIGHWAY ADMINISTRATION
CENTRAL FEDERAL LANDS HIGHWAY DIVISION

PRECAST CONCRETE BOX CULVERT Sta. 17+10.70

7/10/2008 3:10:56 PM N:\FL\FL PFH 12-1(1)\Roadway\sheets\EFL_Plan_Set\D_SHT\D05-FL_PFH12-1(1)_BPP.dgn

REG	STATE	PROJECT	SHEET NO.
8	FL	FL PFH 12-1(1) River Styx Bridges	D6

PRECAST CONCRETE BOX CULVERT
3 Cells, 12-ft Span x 8-ft Rise

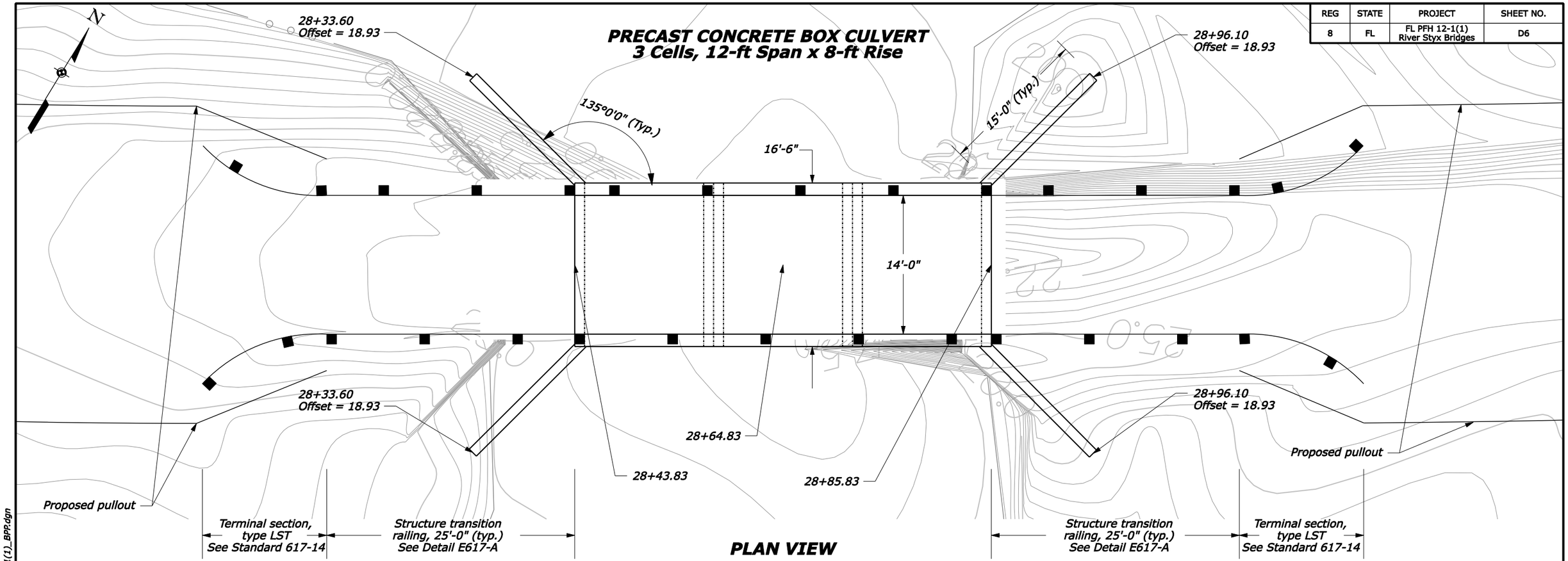

PLAN VIEW

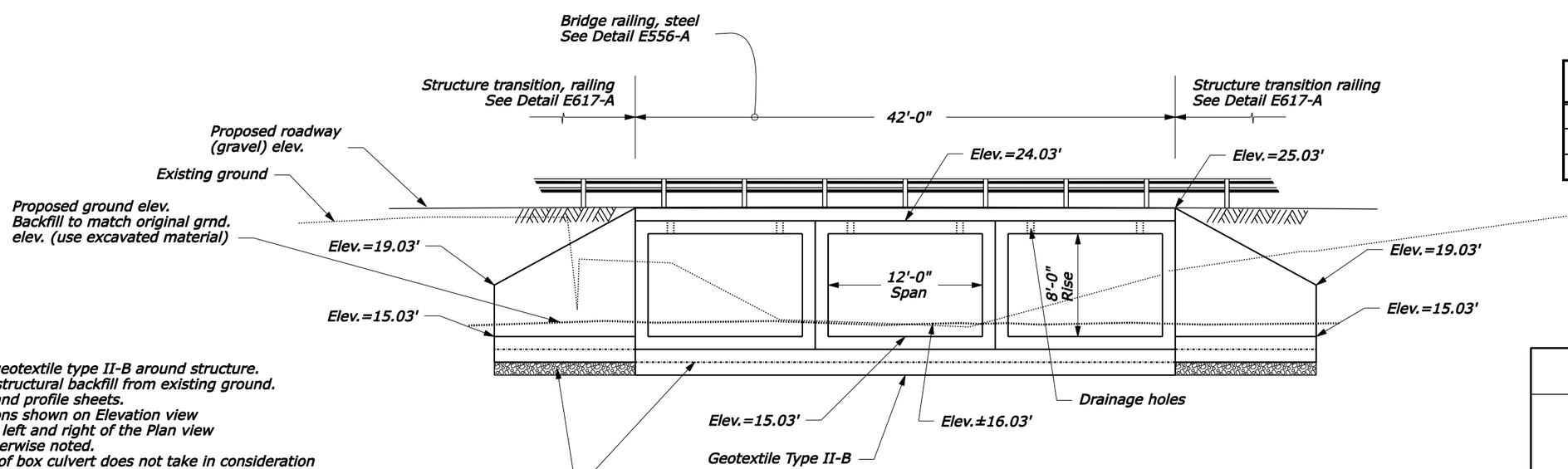

ELEVATION

	Q [ft³/s]	Vm [ft/s]	WS ELV. [ft]
Q_2	10.11	0.128	18.01
Q_{50}	17	0.2	18.19
Q_{100}	19	0.218	18.24

0 10' 20'
Scale in Feet

NOTE:
1. Place geotextile type II-B around structure. Separate structural backfill from existing ground. See plan and profile sheets.
2. Elevations shown on Elevation view are equal left and right of the Plan view unless otherwise noted.
3. Layout of box culvert does not take in consideration fill material between boxes. Adjust stationing and elevation as necessary.
4. Allowable soil bearing pressure is 2,000 psf. To be evaluated by a geotechnical engineer immediately prior to the placement of concrete.

U.S. DEPARTMENT OF TRANSPORTATION
FEDERAL HIGHWAY ADMINISTRATION
CENTRAL FEDERAL LANDS HIGHWAY DIVISION

PRECAST CONCRETE BOX CULVERT Sta. 28+64.83

7/10/2008 3:11:24 PM N:\FL\FL PFH 12-1(1)\Roadway\sheets\EFL_Plan_Set\D_SHT\D06-FL_PFH12-1(1)_BPP.dgn

REG	STATE	PROJECT	SHEET NO.
8	FL	FL PFH 12-1(1) River Styx Bridges	D7

Overhead power line

Underground telephone line

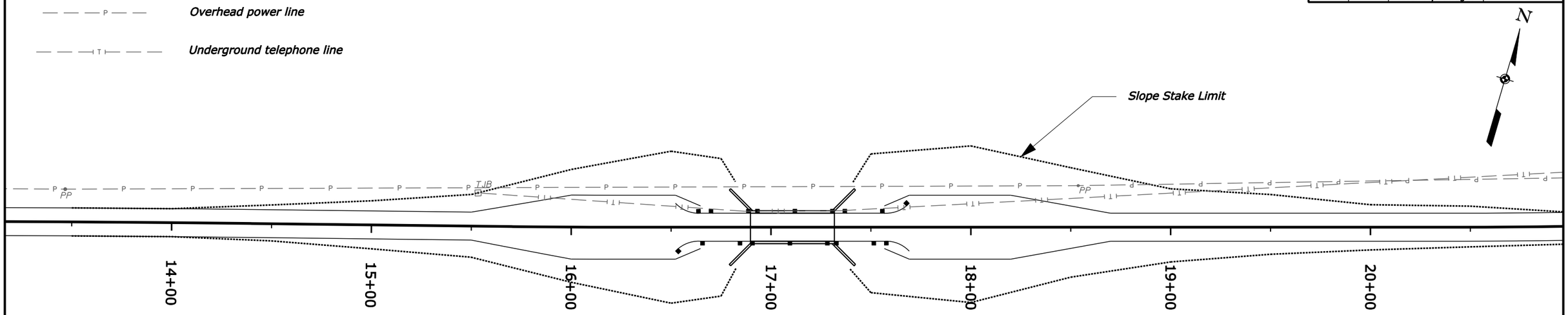

NOTE:

1. Do not disturb existing power poles. Place embankment fill around pole base.

2. Underground telephone line to be relocated by others prior to construction.

0 50' 100'
Scale in Feet

Overhead power line

Underground telephone line

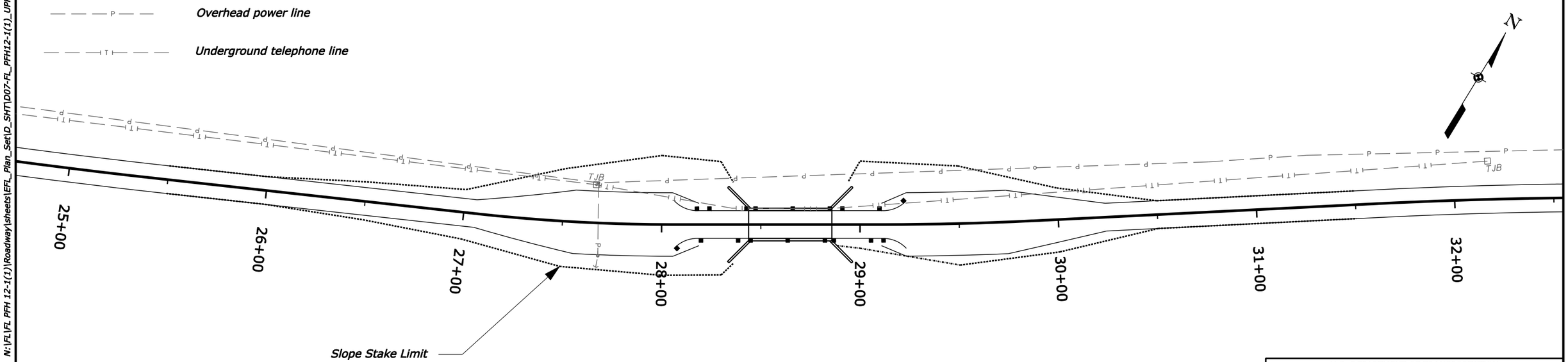

NOTE:

1. Do not disturb existing power poles. Place embankment fill around pole base.

2. Underground telephone line to be relocated by others prior to construction.

0 50' 100'
Scale in Feet

U.S. DEPARTMENT OF TRANSPORTATION
FEDERAL HIGHWAY ADMINISTRATION
CENTRAL FEDERAL LANDS HIGHWAY DIVISION

EXISTING UTILITIES

6/24/2008 5:10:37 PM N:\FL\FL PFH 12-1(1)\Roadway\sheets\EFL_Plan_Set\D_SHT\D07-FL_PFH12-1(1)_UPP.dgn

EROSION CONTROL NARRATIVE

DESCRIPTION OF PROJECT

This project is located at 2.3 and 2.5 miles west of the FR115/SR379 intersection on FR115, in the Apalachicola National Forest, Liberty County, Florida. The project will remove the existing two bridge structures and will install two precast concrete box culverts at the same locations. The profile will be adjusted accordingly and will add pullouts to the existing alignment at box culvert locations.

GENERAL GUIDELINES

The Erosion Control Plans (ECP) are incorporated into the Erosion Control Plan Sheets and Details and are meant as a guideline for preventing and controlling sediment. Install all erosion and sediment control devices as shown in the ECP or as directed by the Contracting Officer (CO). Do not modify the type, size or location of any control or practice without approval from the CO.

Inspect all erosion and sediment control devices every seven calendar days and within 24 hours after any storm event of more than 1/2 inch in precipitation. Repair as needed or as directed by CO. Clean all sediment control devices (silt fence, inlet protectors and sediment traps) when they become half full of sediment or as directed by the CO. Dispose of the sediment by spreading it on site or disposing of it legally outside forest boundaries.

Preventing initial soil erosion is much more effective than trying to control eroded sediment. Therefore, stabilize all disturbed areas as soon as practical, but not more than 14 days after construction activity has temporarily or permanently ceased. Stabilization may be in the form of paved waterways, rock riprap and/or turf establishment. Construct temporary erosion controls in incremental stages as construction proceeds.

Attempt to control only the sediment-laden runoff generated by the project site. Separate and route clean, offsite runoff through the project using earth diversion berms, diversion channels and culverts.

Do not drive construction equipment across flowing waterways.

Do not allow construction vehicles to track sediment outside the project limits.

Inspection of erosion control devices must continue for a period of 8 weeks following completion of the project.

Contractor shall submit a dewatering plan at the preconstruction meeting, this plan shall comply the local authorities.

Dewatering practices are used to remove ground or accumulated rain water from excavated areas. Pump muddy water from these areas to a temporary or permanent sedimentation basin or to an area completly enclosed by silt fence in a flat vegetated area where discharges can infiltrate into the ground.

Never discharge muddy water into storm drains, streams, lakes, or wetlands unless the sediment has been removed before discharge.

All equipment is expected to be pressured-washed of any obvious dirt clogs or deposits before entering the National Forest and before exiting the project site if operating in the infectious area of the Japanese climbing fern.

TEMPORARY EROSION AND SEDIMENT CONTROL

PHASE I (ESTABLISH PERIMETER CONTROLS)

During clearing and grubbing operations, construct perimeter controls to ensure that sediment does not leave the project site. Perimeter controls may include silt fence, earth diversion berms, furrow ditches, turbidity barriers and offsite temporary sediment traps. Outlet sediment traps to nearby undisturbed streams or swales, or tie traps to diversion channels. Use diversion channels to route clean offsite drainage through the project site. Where possible, install permanent culverts and channels before beginning rough grading and divert offsite drainage through completed culverts as soon as practical. Where not practical, use temporary culverts for crossing of active streams or temporary diversion channels until permanent culverts can be installed. Do not line with plastic those portions of the diversion channels that run along natural stream beds.

PHASE II (INTERMEDIATE CONTROLS)

Apply intermediate controls during rough grading and culvert installation operations. Obtain the CO's approval before installing any controls not specified in the ECP. The CO may direct the Contractor to install certain controls in order to forestall or mitigate potential or existing erosion problems.

Upon completion of culverts or other structures, ensure that entrances, outlets and outlet channels and slopes are to final grade and are stabilized (with vegetation, riprap or pavement) before routing drainage through or on completed areas. Remove diversion channels and reroute offsite drainage through completed culverts as soon as practical.

Provide silt fence at the toe of all embankment slopes and around all stockpiled excavated roadway material. Apply mulch and turf establishment to stockpiles remaining in place longer than 14 calendar days or when directed by the CO.

PERMANENT EROSION AND SEDIMENT CONTROL

PHASE III (FINAL CONTROLS/STABILIZATION)

Complete remaining channels by paving, riprapping or applying permanent turf establishment. Where necessary, replace eroded topsoil and reapply permanent turf establishment to disturbed areas where vegetation has not been established.

Inspect, clean and repair all culvert outlet protection, riprap basins and stabilized channels and slopes.

Remove all fill slope perimeter earth berms and silt fence only after the embankment slopes and toe of fill have been stabilized.

Remove all perimeter controls when directed by the CO.

U.S. DEPARTMENT OF TRANSPORTATION
FEDERAL HIGHWAY ADMINISTRATION
CENTRAL FEDERAL LANDS HIGHWAY DIVISION

EROSION CONTROL NARRATIVE

7/10/2008 3:12:04 PM N:\FL\FL PFH 12-1(1)\Roadway\sheets\EFL_Plan_Set\M_SHT\M01-FL_PFH12-1(1)_E&S.dgn

REG	STATE	PROJECT	SHEET NO.
8	FL	FL PFH 12-1(1) River Styx Bridges	M2

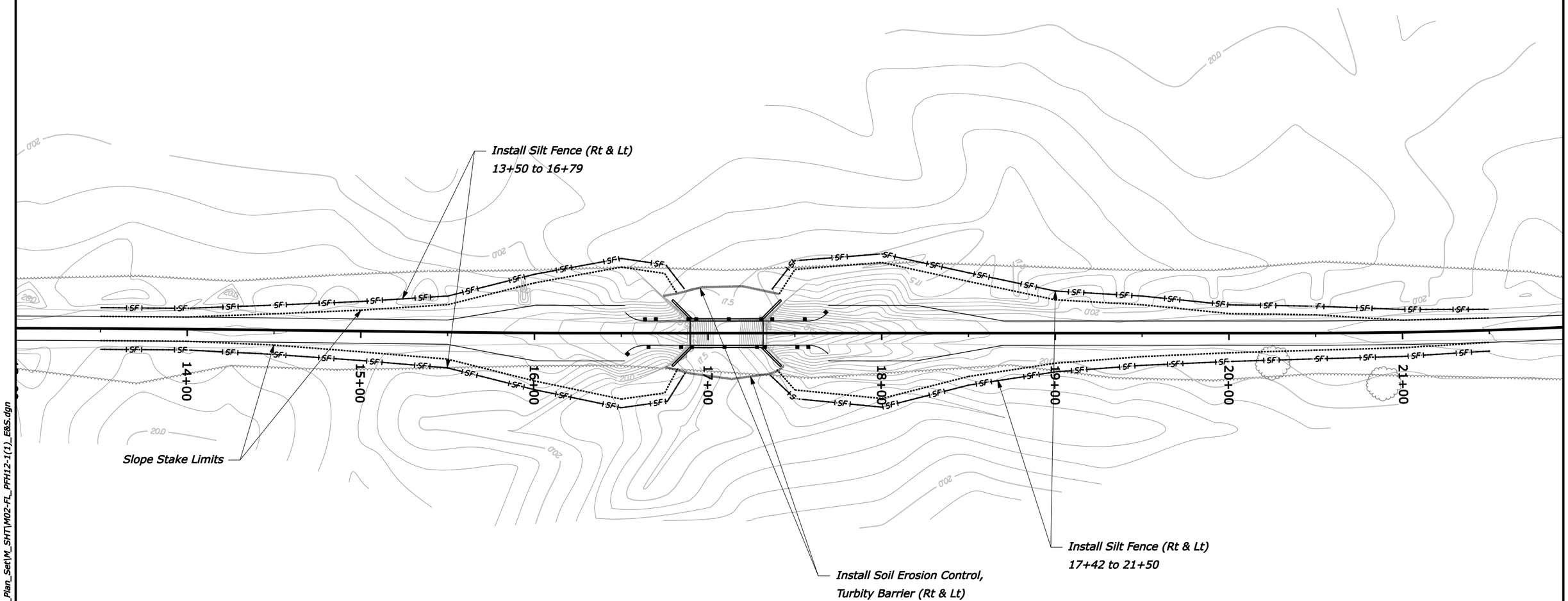

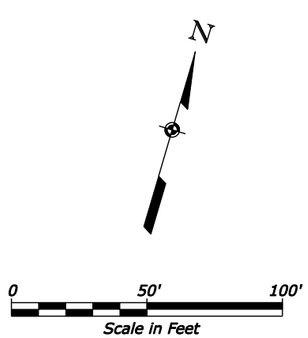

U.S. DEPARTMENT OF TRANSPORTATION
FEDERAL HIGHWAY ADMINISTRATION
CENTRAL FEDERAL LANDS HIGHWAY DIVISION

EROSION CONTROL PLAN
PCBC #2

7/10/2008 3:12:34 PM N:\FL\FL PFH 12-1(1)\Roadway\sheets\EFL_Plan_Set\M_SHT\M02-FL_PFH12-1(1)_E&S.dgn

REG	STATE	PROJECT	SHEET NO.
8	FL	FL PFH 12-1(1) River Styx Bridges	M3

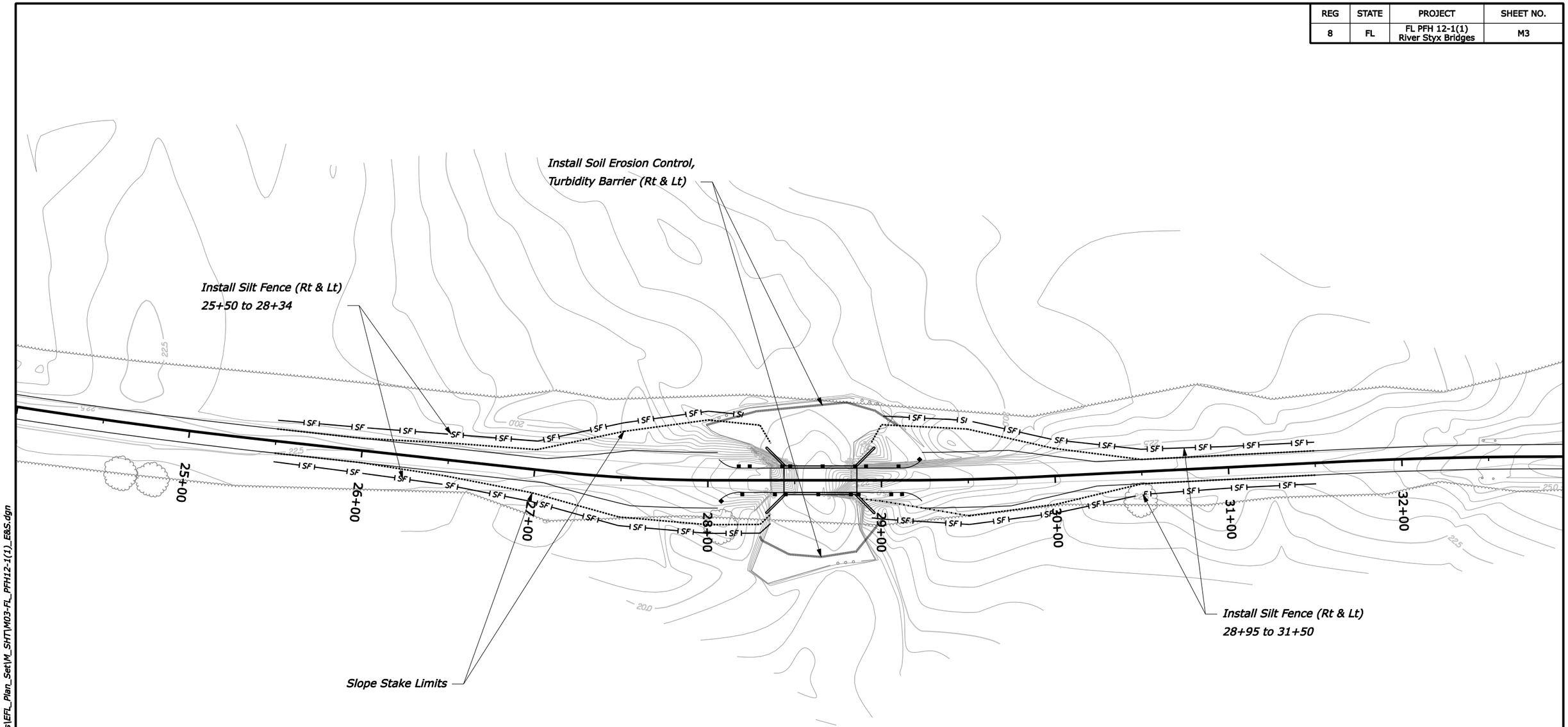

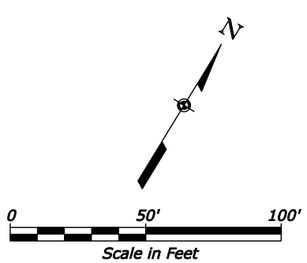

U.S. DEPARTMENT OF TRANSPORTATION
FEDERAL HIGHWAY ADMINISTRATION
CENTRAL FEDERAL LANDS HIGHWAY DIVISION

EROSION CONTROL PLAN
PCBC #1

7/10/2008 3:13:15 PM N:\FL\FL PFH 12-1(1)\Roadway\sheets\EFL_Plan_Set\M_SHT\M03-FL_PFH12-1(1)_E&S.dgn

REG	STATE	PROJECT	SHEET NO.
8	FL	FL PFH 12-1(1) River Styx Bridges	N1

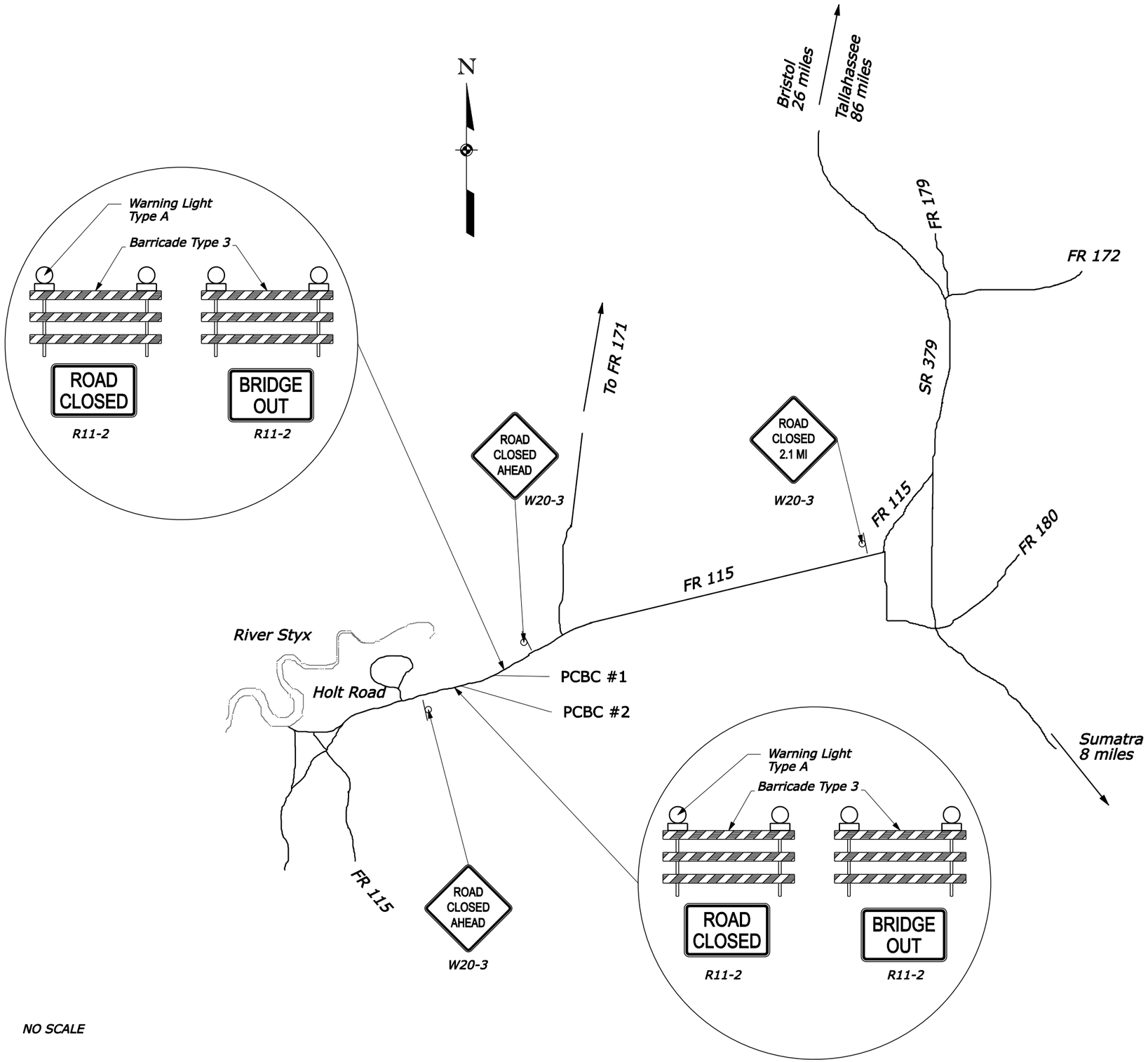

NO SCALE

U.S. DEPARTMENT OF TRANSPORTATION
FEDERAL HIGHWAY ADMINISTRATION
CENTRAL FEDERAL LANDS HIGHWAY DIVISION

TEMPORARY TRAFFIC CONTROL SIGNING PLAN

6/24/2008 5:12:48 PM N:\FL\FL PFH 12-1(1)\Roadway\sheets\EFL_Plan_Set\N_SHT\N01-FL_PFH12-1(1)_TCP.dgn

REG	STATE	PROJECT	SHEET NO.
8	FL	FL PFH 12-1(1) River Styx Bridges	P1

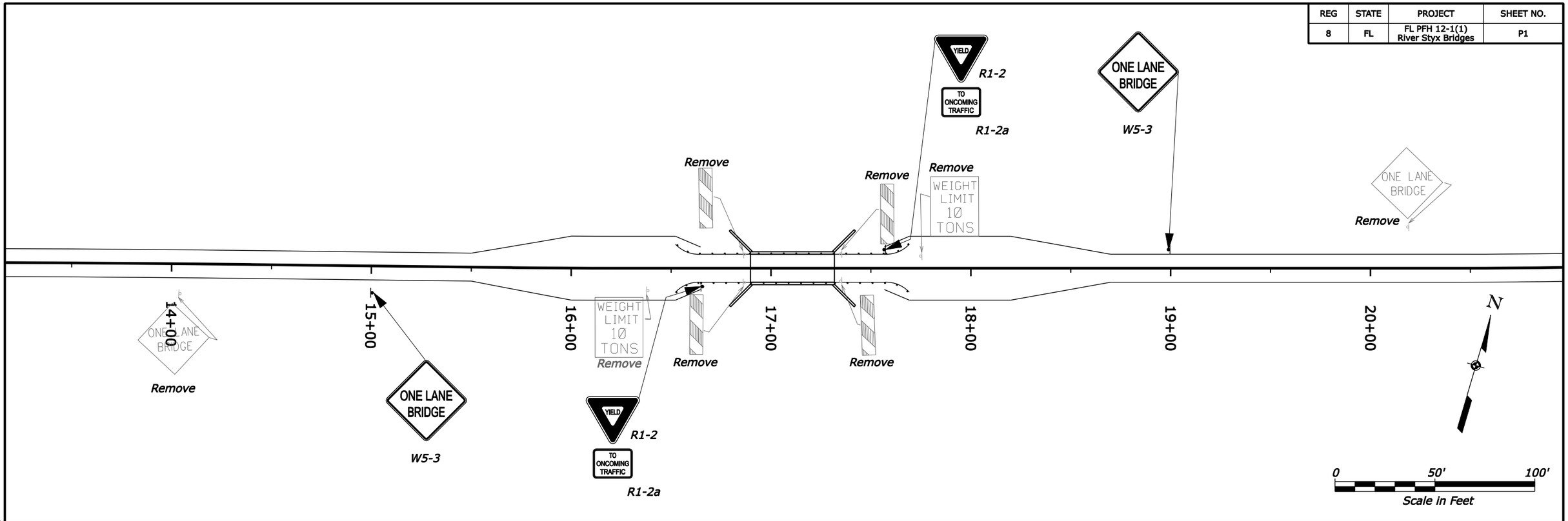

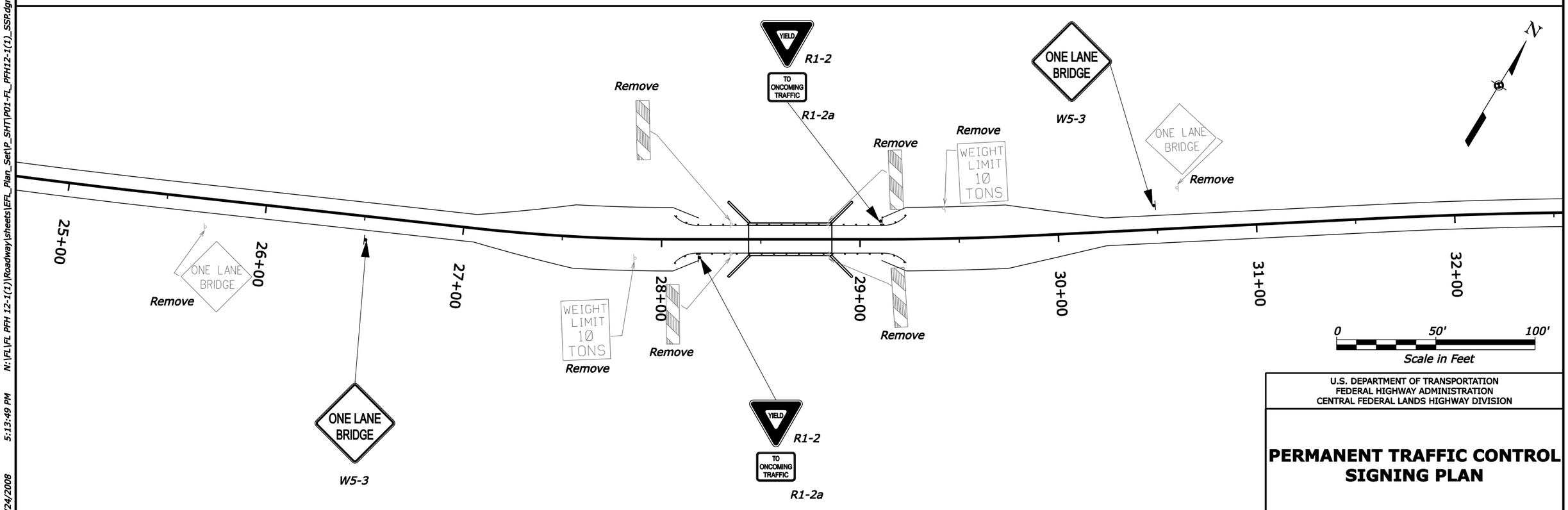

U.S. DEPARTMENT OF TRANSPORTATION
FEDERAL HIGHWAY ADMINISTRATION
CENTRAL FEDERAL LANDS HIGHWAY DIVISION

PERMANENT TRAFFIC CONTROL SIGNING PLAN

6/24/2008 5:13:49 PM N:\FL\FL PFH 12-1(1)\Roadway\sheets\EFL_Plan_Set\P_SHT\P01-FL_PFH12-1(1)_SSP.dgn

REG	STATE	PROJECT	SHEET NO.
8	FL	FL PFH 12-1(1) River Styx Bridges	S1

NOTE:

1. Use drainage ditch installation for low flow conditions only when specified on Erosion Control Plan.
2. Alternate preassembled silt fence options (geotextile, type V-B) will be allowed as long as specified dimensions are satisfied. Follow manufacturer's recommendations for installation procedures. All types must ensure silt fence remains attached to, and does not slide down, supporting posts.
3. Install silt fence along ground contours. Curve ends of silt fence upgrade to prevent water from running around the ends.
4. 10 ft. (max.) spacing with fence support.
   6 ft. (max.) spacing without fence support.

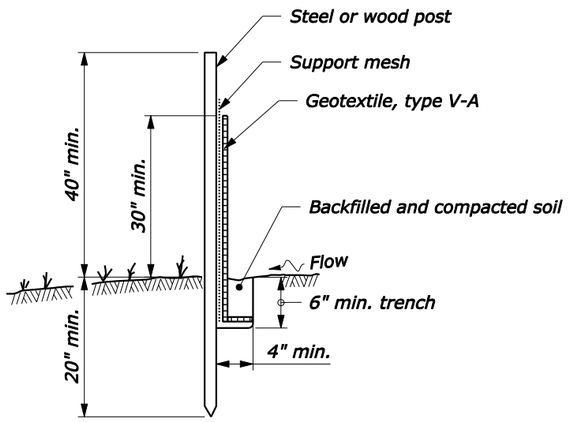

POST AND GEOTEXTILE INSTALLATION DETAIL

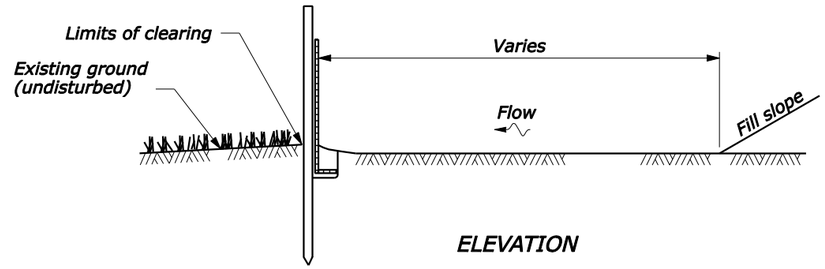

ELEVATION

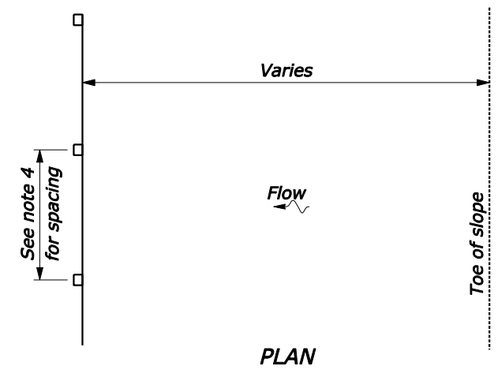

PLAN

SILT FENCE INSTALLATION AT TOE OF FILL

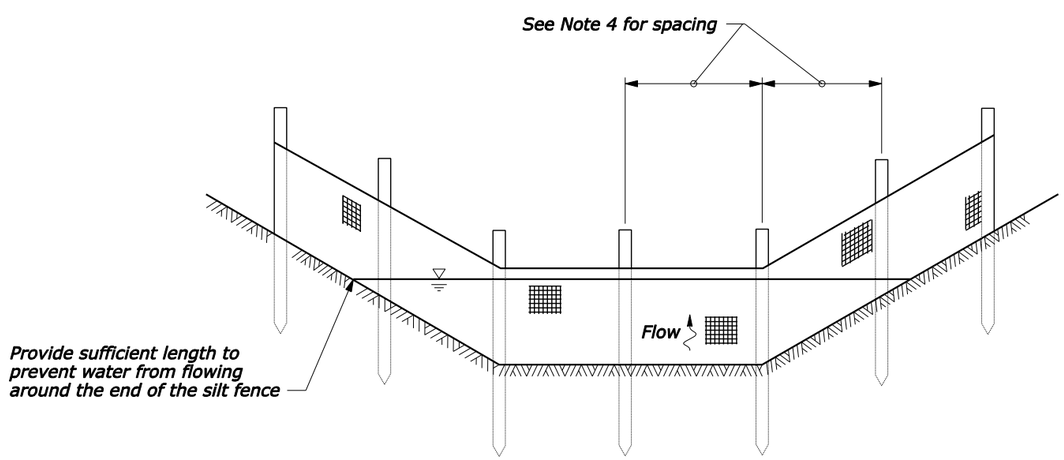

SILT FENCE INSTALLATION IN A DRAINAGE DITCH

See Note 1

U.S. DEPARTMENT OF TRANSPORTATION
FEDERAL HIGHWAY ADMINISTRATION
CENTRAL FEDERAL LANDS HIGHWAY DIVISION

U.S. CUSTOMARY DETAIL

SILT FENCE

DETAIL APPROVED FOR USE

REVISED:

DETAIL
157-1

6/24/2008 5:14:18 PM N:\FL\FL PFH 12-1(1)\Roadway\sheets\EFL_Plan_Set\S_SHT\S01-FL_PFH12-1(1)_157-1.dgn

REG	STATE	PROJECT	SHEET NO.
8	FL	FL PFH 12-1(1) River Styx Bridges	S2

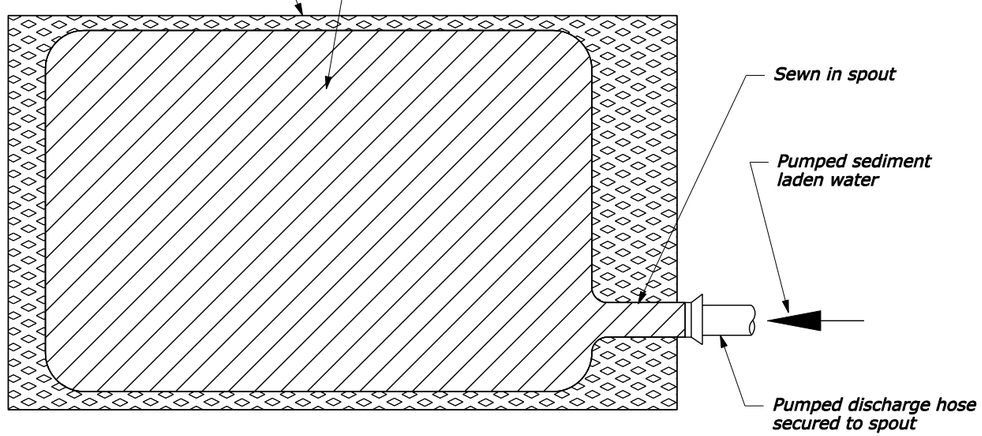

TOP VIEW

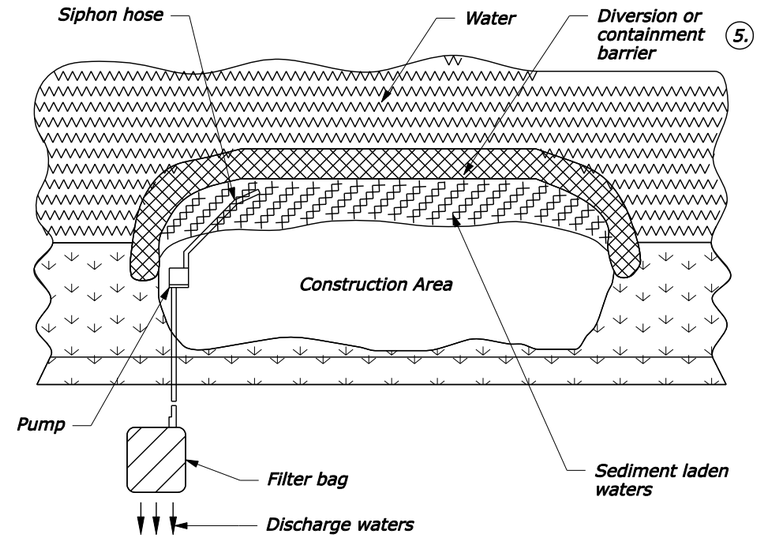

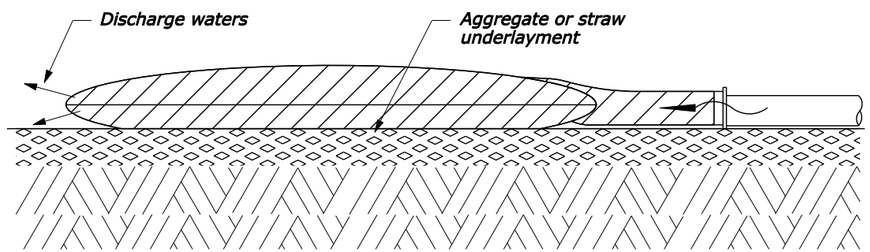

SIDE VIEW

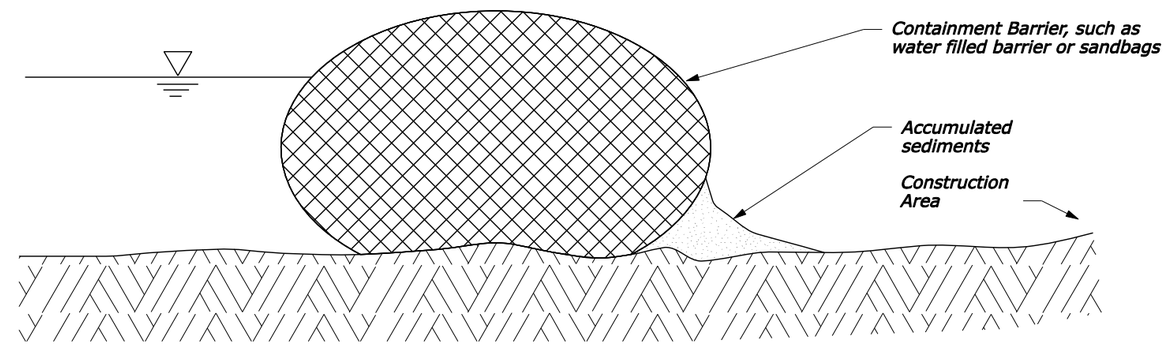

NOTES:

1. Install the barrier before any construction activities begin.
2. Discharge water onto a grass line swale, grass field, or into a secondary sediment containment system.
3. Discharge water must flow away from the construction area.
4. Sediment captured by the filter bag must be removed and stabilized, and must not be discharged into the displaced waters.
5. Dewatering subsidiary to item 60223-4050, Concrete Box Culverts. Do not measure for payment.
6. Set elevation of Diversion / Containment Barrier to water surface elevation for two year flow plus 18-inches, or to existing water surface elevation plus 18-inches.
7. Before taking the containment barrier away from the construction site, accumulated sediments must be removed and stabilized.
8. Discharge liquid within the water filled barrier (if used) as instructed by the CO.

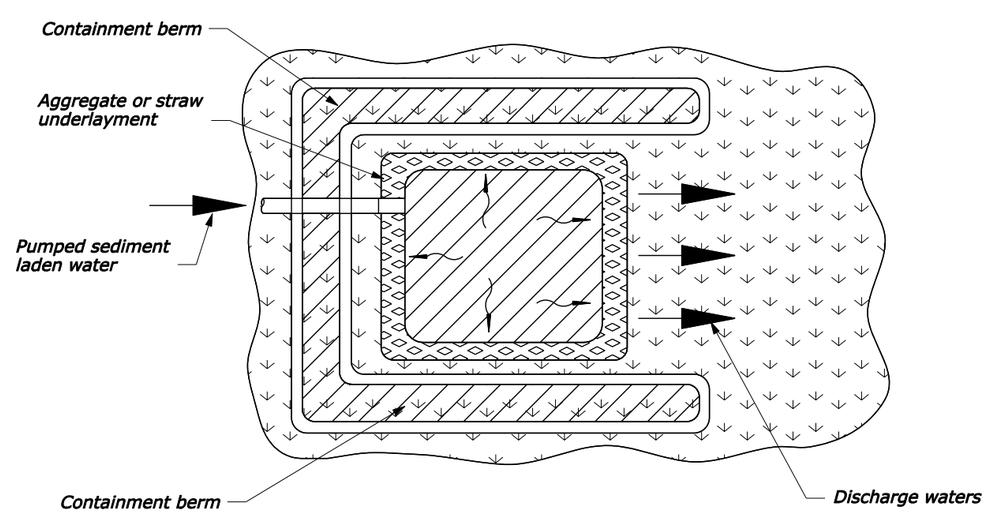

U.S. DEPARTMENT OF TRANSPORTATION
FEDERAL HIGHWAY ADMINISTRATION
CENTRAL FEDERAL LANDS HIGHWAY DIVISION

U.S. CUSTOMARY DETAIL

DEWATERING PLAN

DETAIL APPROVED FOR USE

REVISED:

DETAIL
E157-A

6/24/2008 5:14:39 PM N:\FL\FL PFH 12-1(1)\Roadway\sheets\EFL_Plan_Set\S_SHT\S02-FL_PFH12-1(1)_157-A.dgn

REG	STATE	PROJECT	SHEET NO.
8	FL	FL PFH 12-1(1) River Styx Bridges	S3

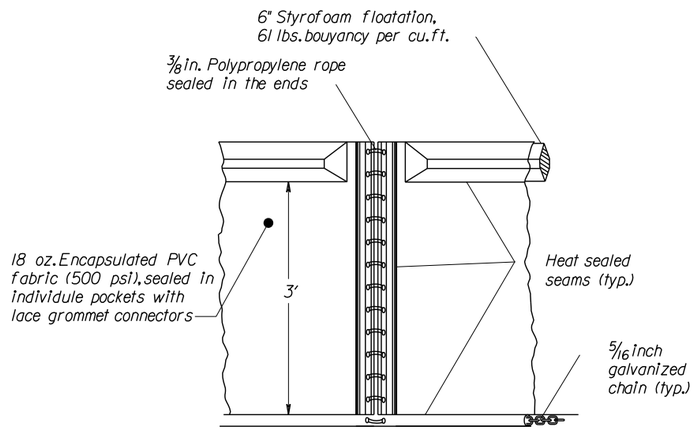

FLOATING TURBIDITY BARRIER DETAIL

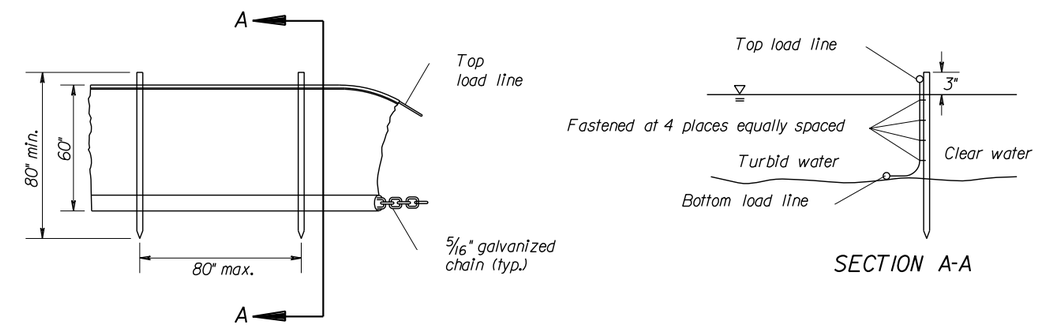

STAKED TURBIDITY BARRIER

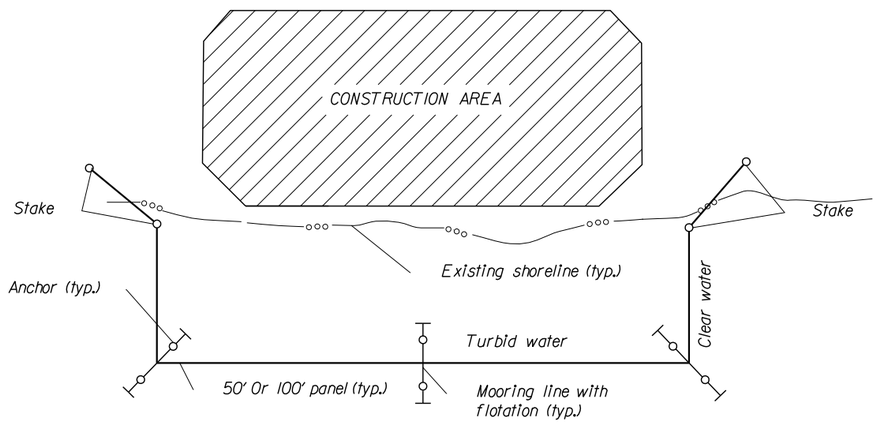

PLAN VIEW

NOTES:

1. *Install the turbidity barrier before any construction activities begin.*
2. *Do not install turbidity barriers where the flow of water will remove accumulated sediment and/or significantly move the curtain.*
3. *When used in a live stream, turbidity barriers must be installed parallel, not perpendicular, to the water flow.*
4. *Removal of captured sediment behind the curtain may need to occur prior to removing the barrier.*

U.S. DEPARTMENT OF TRANSPORTATION
FEDERAL HIGHWAY ADMINISTRATION
CENTRAL FEDERAL LANDS HIGHWAY DIVISION

U.S. CUSTOMARY DETAIL

TURBIDITY BARRIER

DETAIL APPROVED FOR USE

REVISED:

DETAIL
E157-B

6/24/2008 5:14:58 PM N:\FL\FL PFH 12-1(1)\Roadway\sheets\EFL_Plan_Set\S_SHT\S03-FL_PFH12-1(1)_157-B.dgn

REG	STATE	PROJECT	SHEET NO.
8	FL	FL PFH 12-1(1) River Styx Bridges	S4

ADOPTED FROM FDOT STANDARD 00289

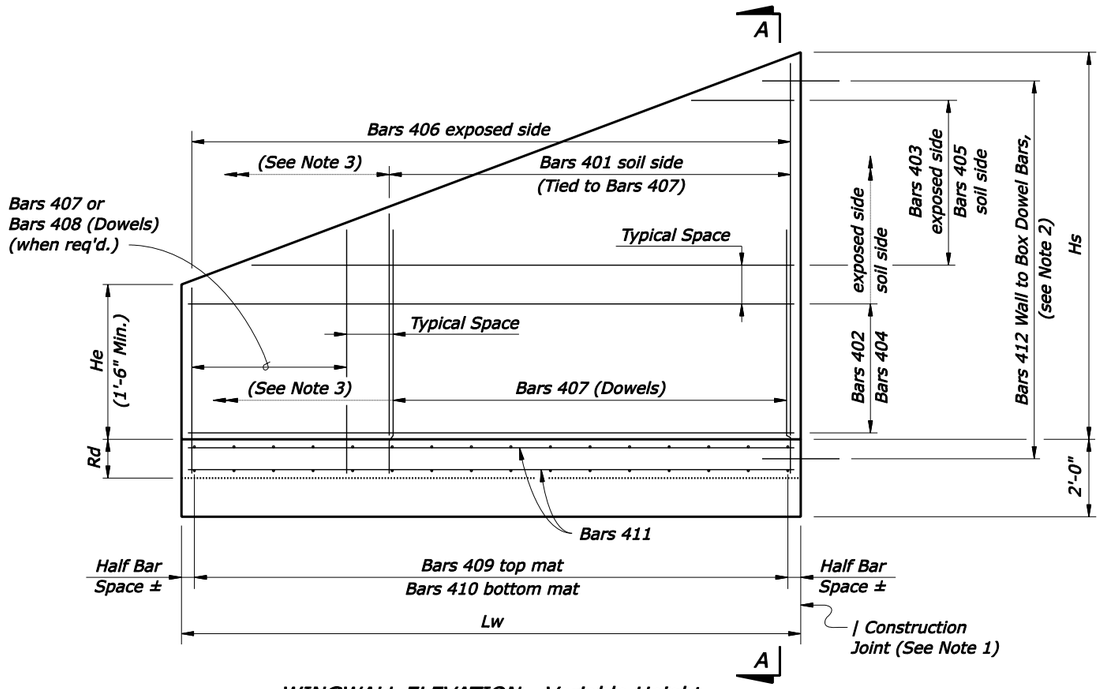

WINGWALL ELEVATION - Variable Height
(Left End shown - other corners similar)

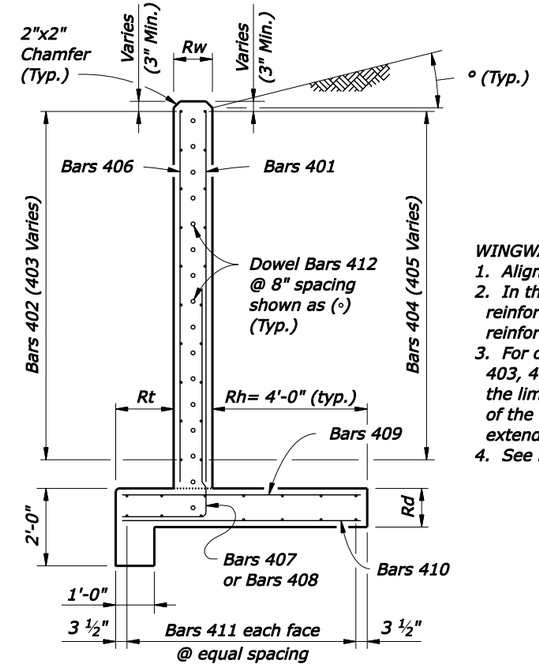

WINGWALL SECTION A-A

WINGWALL NOTES:

1. Align construction joint perpendicular to wingwall.
2. In the vicinity of the construction joint, field bend reinforcement as necessary to maintain minimum reinforcement cover.
3. For constant height wingwalls, variable length Bars 403, 405 & 408 are not required, and as such the limits of Bars 401 & 407 extend the full length of the wingwall, and the limits of Bars 402 & 404 extend to the full height of the wingwall.
4. See box culvert layout for Hs, Lw, & Rd dimensions.

U.S. DEPARTMENT OF TRANSPORTATION
FEDERAL HIGHWAY ADMINISTRATION
CENTRAL FEDERAL LANDS HIGHWAY DIVISION

U.S. CUSTOMARY DETAIL

CAST-IN-PLACE WINGWALL

DETAIL APPROVED FOR USE

REVISED:

DETAIL
E552-A

6/24/2008 5:15:31 PM N:\FL\FL PFH 12-1(1)\Roadway\sheets\EFL_Plan_Set\S_SHT\S04-FL_PFH12-1(1)_552-A.dgn

REG	STATE	PROJECT	SHEET NO.
8	FL	FL PFH 12-1(1) River Styx Bridges	S5

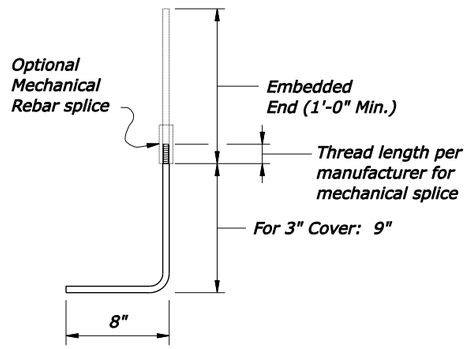

#4 BAR END CAP ANCHOR
BAR BEND DIAGRAM

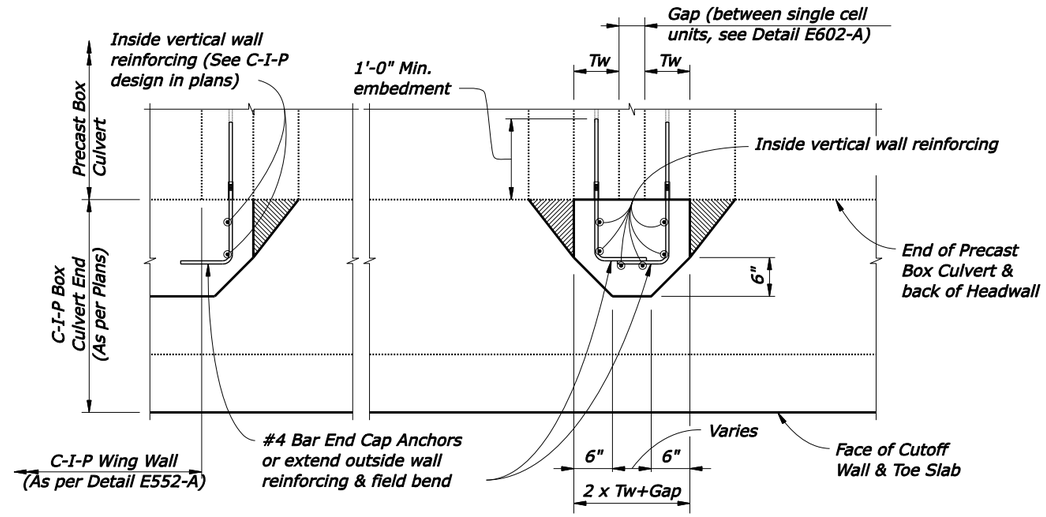

SECTION H-H

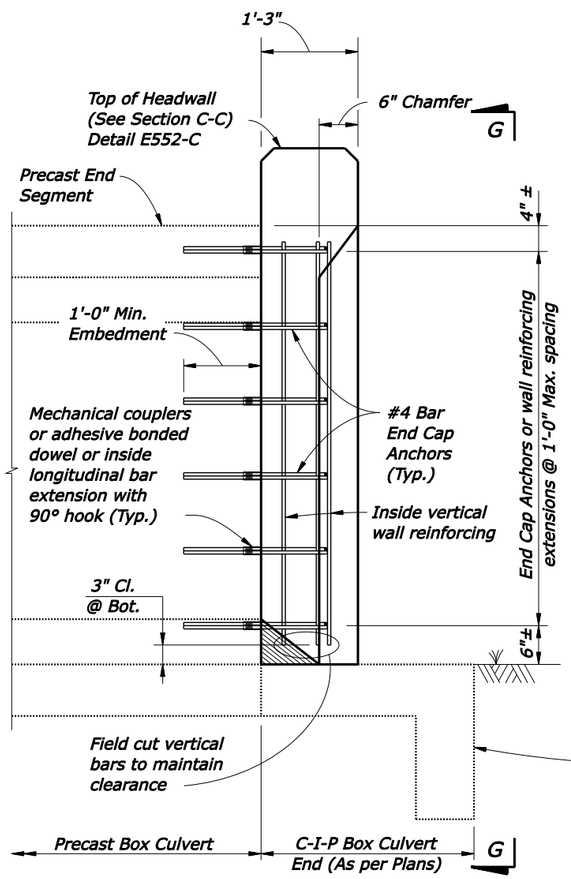

SECTION F-F

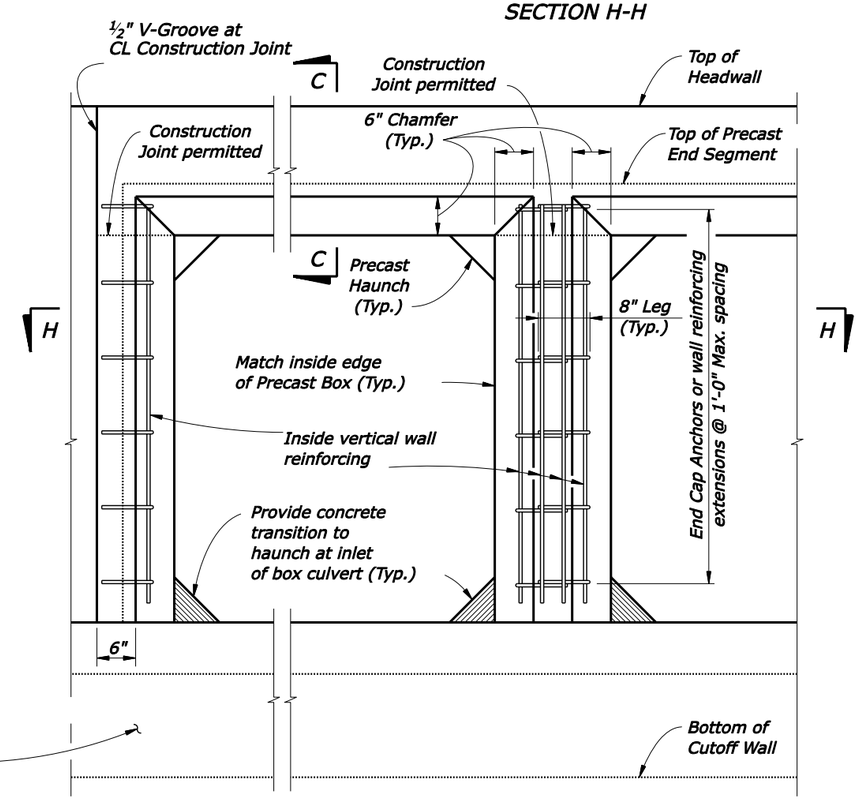

VIEW G-G
(Headwall, Toe Slab and Cutoff Wall Reinforcing not shown for clarity)

C-I-P END CAP DETAILS AND CONNECTION TO PRECAST BOX

ADOPTED FROM FDOT STANDARD 00291

U.S. DEPARTMENT OF TRANSPORTATION
FEDERAL HIGHWAY ADMINISTRATION
CENTRAL FEDERAL LANDS HIGHWAY DIVISION

U.S. CUSTOMARY DETAIL

CAST-IN -PLACE HEADWALL

DETAIL APPROVED FOR USE

REVISED:

DETAIL
E552-B

6/24/2008 5:16:09 PM N:\FL\FL PFH 12-1(1)\Roadway\sheets\EFL_Plan_Set\S_SHT\S05-FL_PFH12-1(1)_552-B.dgn

REG	STATE	PROJECT	SHEET NO.
8	FL	FL PFH 12-1(1) River Styx Bridges	S6

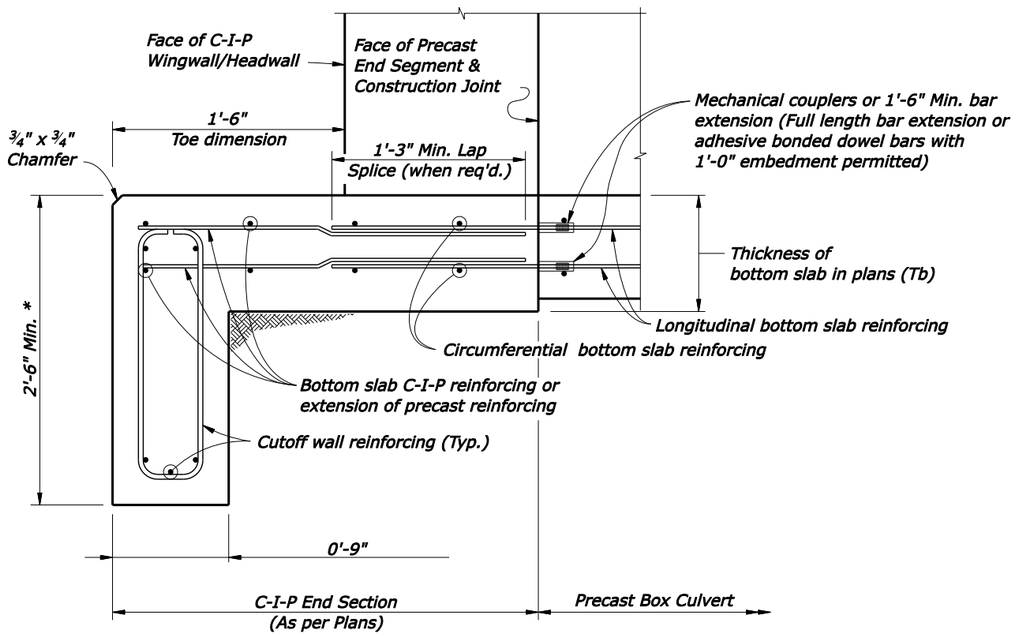

SECTION D-D
C-I-P TOE SLAB & CUTOFF WALL DETAILS
AND CONNECTION TO PRECAST BOX

* Provide additional 6" depth of cutoff wall at no additional cost.

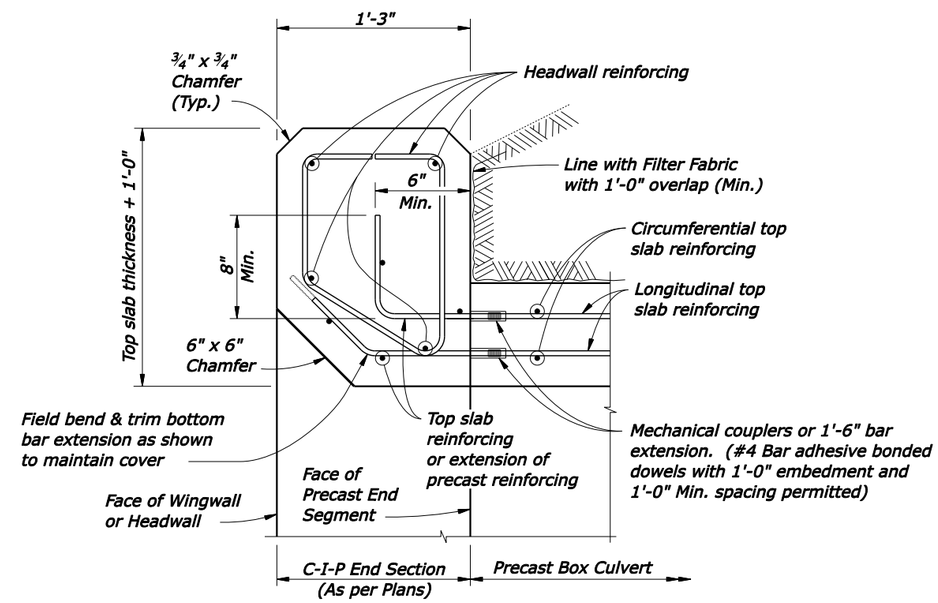

SECTION C-C
C-I-P HEADWALL DETAILS AND CONNECTION TO PRECAST BOX

NOTE:

1. Railing not shown. See Detail E556-A
2. Design curb to meet requirement to min. TL-2 Bridge Railing

ADOPTED FROM FDOT STANDARD 00291

U.S. DEPARTMENT OF TRANSPORTATION
FEDERAL HIGHWAY ADMINISTRATION
CENTRAL FEDERAL LANDS HIGHWAY DIVISION

U.S. CUSTOMARY DETAIL

CAST-IN-PLACE TOE SLAB & CUTOFF WALL

DETAIL APPROVED FOR USE

REVISED:

DETAIL E552-C

6/24/2008 5:16:32 PM N:\FL\FL PFH 12-1(1)\Roadway\sheets\EFL_Plan_Set\S_SHT\S06-FL_PFH12-1(1)_552-C.dgn

REG	STATE	PROJECT	SHEET NO.
8	FL	FL PFH 12-1(1) River Styx Bridges	S7

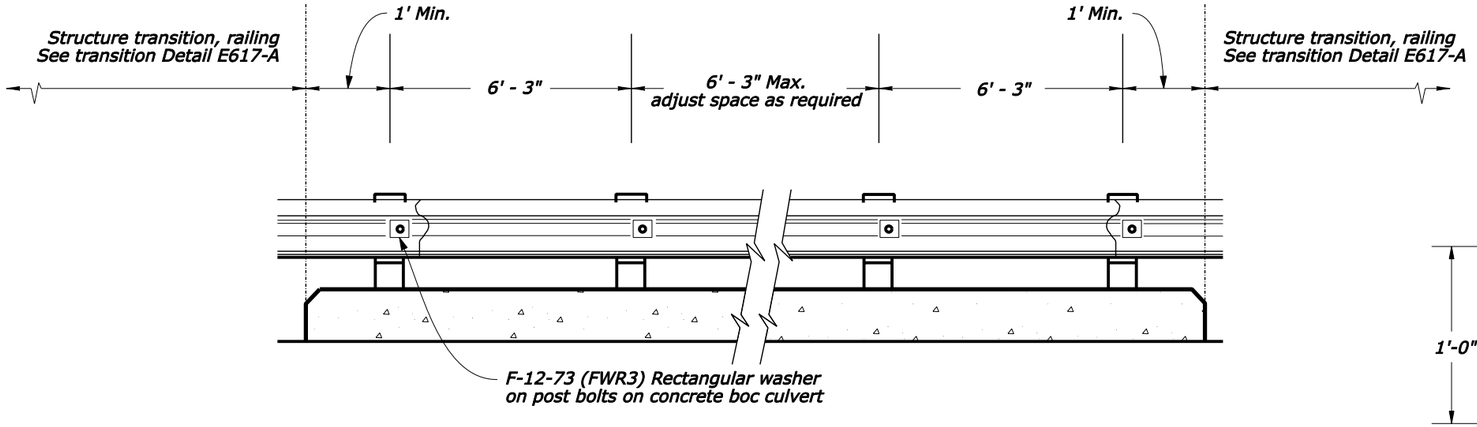

BRIDGE RAILING, STEEL PLACEMENT FOR HEADWALL MOUNT

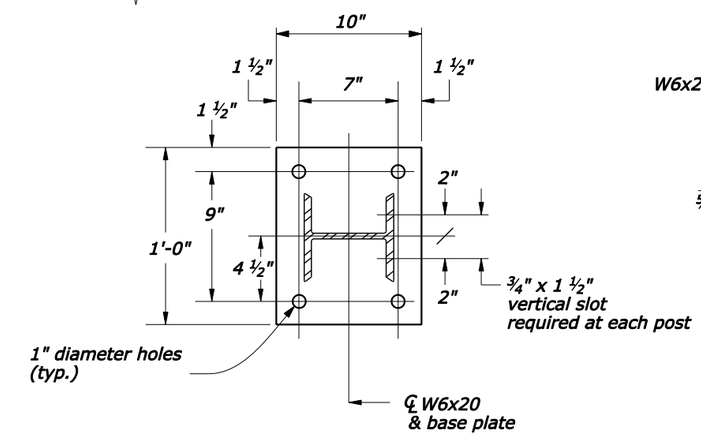

PLAN

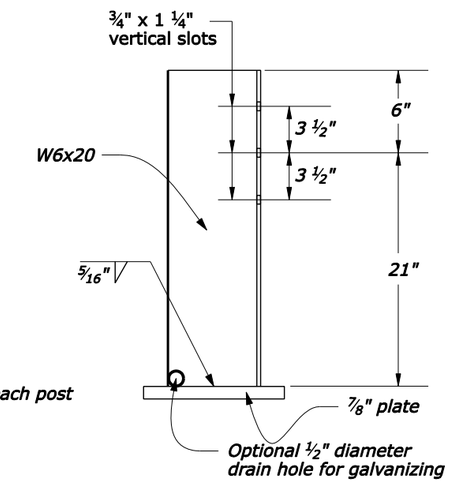

ELEVATION

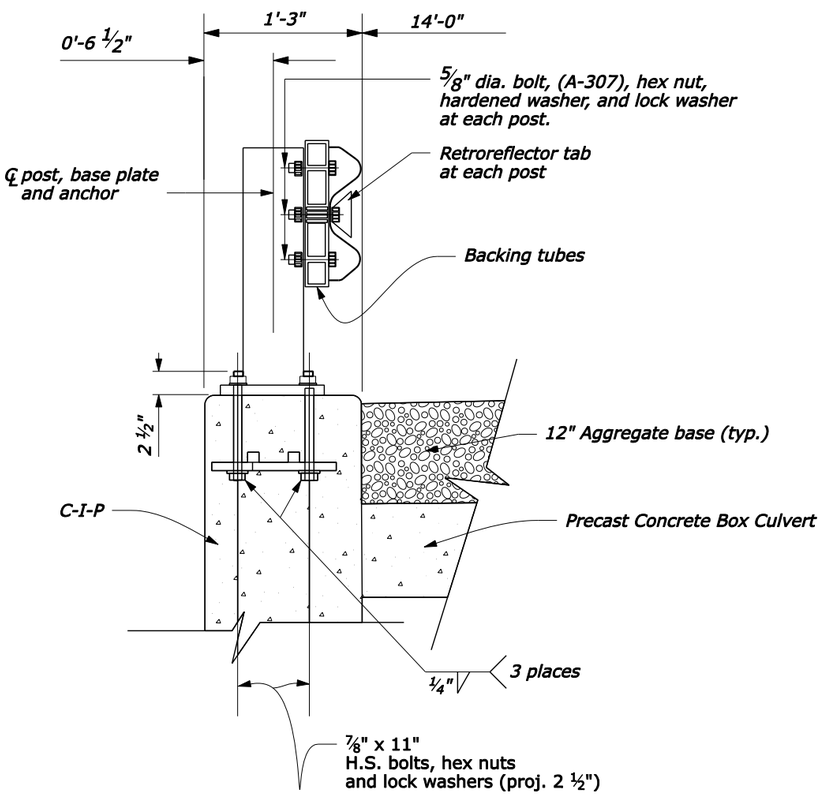

HEADWALL MOUNT ON PCBC

See Detail E552-C for bar diagrams

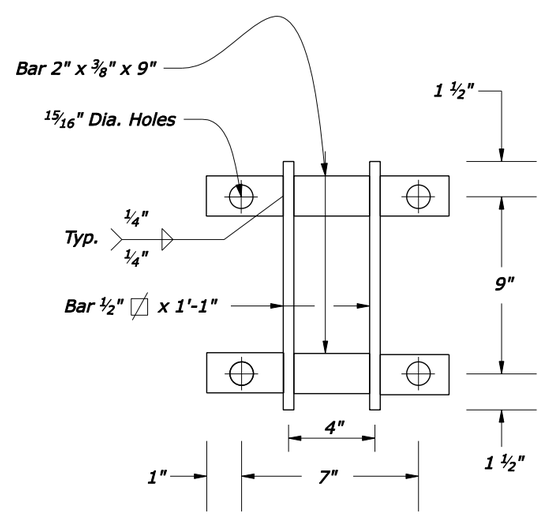

ANCHOR DETAIL

(FOR HEADWALL MOUNT)

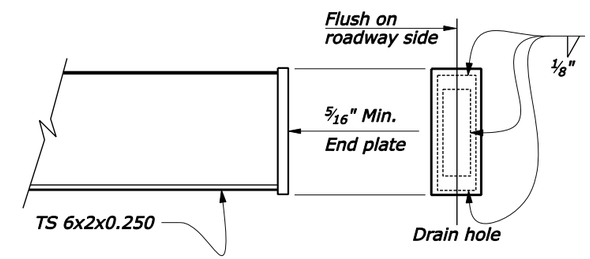

BACKING TUBES END DETAIL

(FOR HEADWALL MOUNT)
TUBES SHALL BE CONTINUOUS. NEITHER
BOLTED NOR WELDED SPLICES WILL BE ALLOWED

NOTE:

1. Bridge railing shall meet min. TL-2 crash test requirements

U.S. DEPARTMENT OF TRANSPORTATION
FEDERAL HIGHWAY ADMINISTRATION
CENTRAL FEDERAL LANDS HIGHWAY DIVISION

U.S. CUSTOMARY DETAIL

BRIDGE RAILING, STEEL

DETAIL APPROVED FOR USE

REVISED:

DETAIL E556-A

6/24/2008 5:16:59 PM N:\FL\FL PFH 12-1(1)\Roadway\sheets\EFL_Plan_Set\S_SHT\S07-FL_PFH12-1(1)_556-A.dgn

REG	STATE	PROJECT	SHEET NO.
8	FL	FL PFH 12-1(1) River Styx Bridges	S8

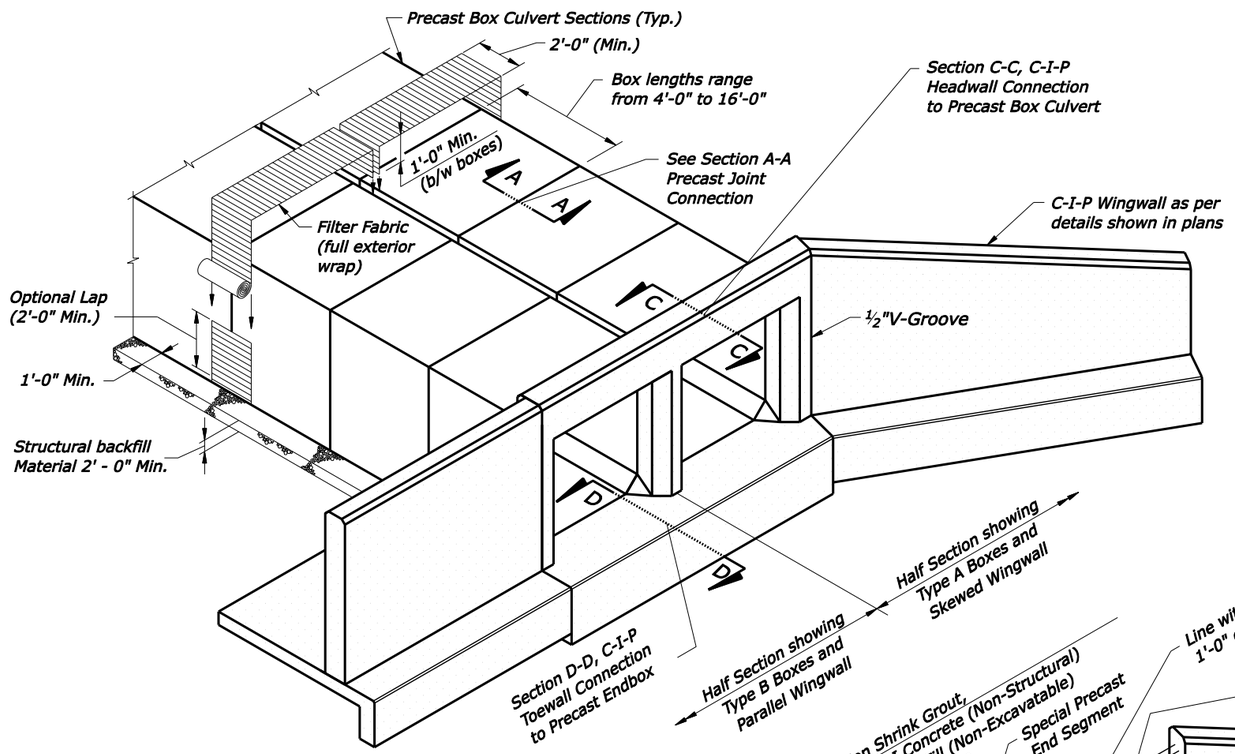

ISOMETRIC VIEW OF PRECAST CONCRETE BOX CULVERT
(Double Barrel Culvert shown,
Single or Multi-Barrel Culvert similar)

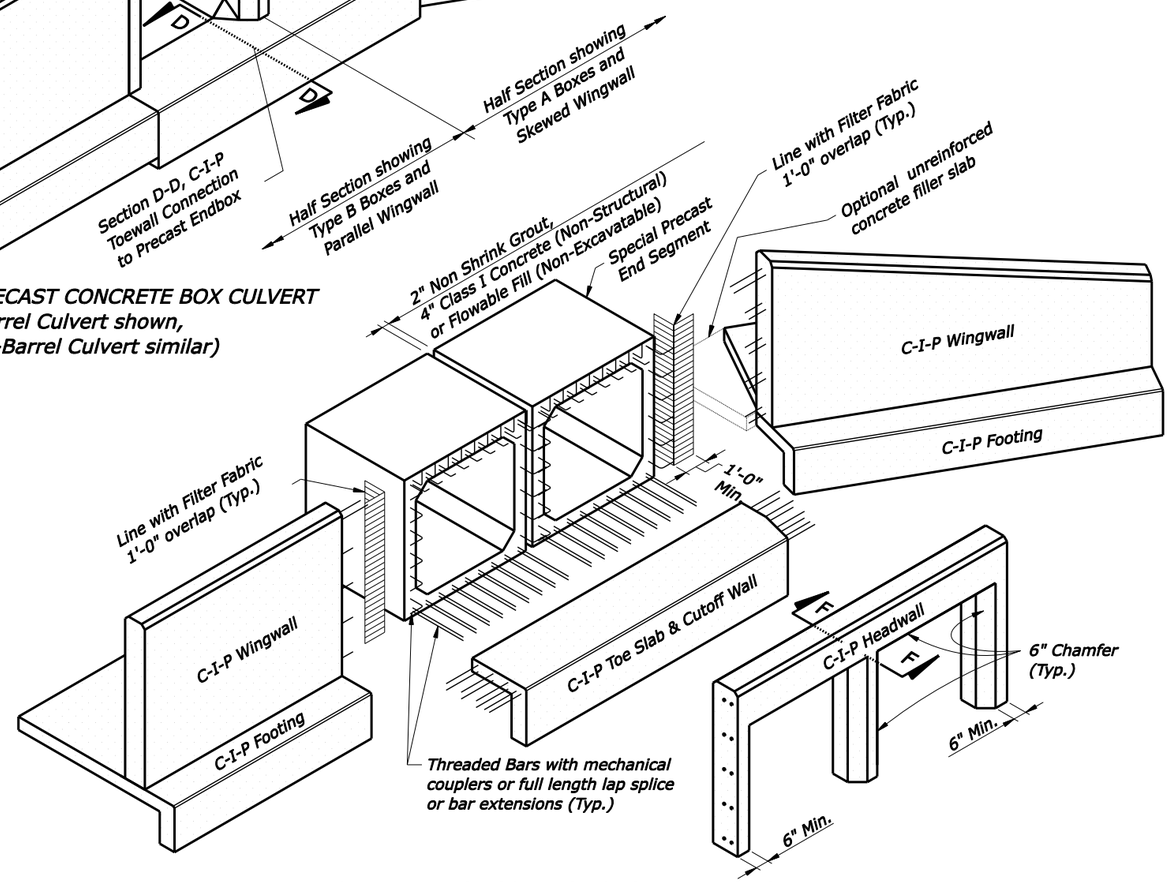

EXPLODED VIEW OF CONNECTIONS AT END OF CULVERT
(Double Barrel Culvert shown, Single or Multi-Barrel Culvert similar)

PERMITTED PRECAST ALTERNATE BOX SECTIONS

TYPE	DESCRIPTION	SINGLE BARREL	MULTIPLE BARRELS	DESIGN NOTES
A	Single Cell Monolithic (Four Sided)			Contractor Design
C	Multi-cell Monolithic	Not Applicable	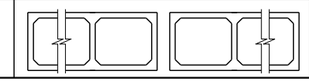	Contractor Design

GENERAL NOTES:

DESIGN SPECIFICATIONS: AASHTO LRFD Bridge Design Specifications, 3rd Edition.

LIVE LOAD: HL-93.

CONSTRUCTION LOADING: It is the Contractor's responsibility to provide for supporting construction loads that exceed AASHTO HL-93, and any construction load applied prior to 1 feet of compacted fill placed above the top slab.

SURFACE FINISH: All concrete surfaces shall receive a general surface finish.

REINFORCING STEEL: ASTM A615, see the "Box Culvert Data Tables" (Details E602-B thru E602-C) in the Contract Plans for grade and bar spacing. See the Reinforcing Bar List in the Contract Plans for bar sizes and bar bending details (Detail E602-C).

BRIDGE RAILING: TL-2 (Min.)

1. Specifications:
   General:
   FP-03 Standard Specifications For Construction of Roads and Bridges On Federal Highway Projects & Special Contract Requirement
   Concrete (Precast):
   5,500 psi for moderately to extremely aggressive environments.
   Concrete (Cast-In-Place):
   5,500 psi for moderately to extremely aggressive environments.
   Reinforcing Steel:
   ASTM A615 Grade 60 deformed bar unless otherwise noted, with a minimum clearance of 3" for extremely aggressive environments, unless otherwise shown. Equal area substitution of welded wire (WWR) reinforcement is permitted.

2. All joints between precast sections must be tongue & groove with joint sealant. Joints between cast-in-place & precast sections shall have longitudinal reinforcing extending from top, bottom & both side slabs of the precast box tied to the cast-in-place reinforcement. Single barrel culverts may have precast headwalls cast integrally with the end segment when approved by the CO.

3. Culverts larger than the specified size may be substituted with no additional payment to the Contractor. Substitution must be approved by the Engineer, minimum earth cover and invert elevations shown in the Contract Documents must be maintained.

ADOPTED FROM FDOT STANDARD 00291

U.S. DEPARTMENT OF TRANSPORTATION
FEDERAL HIGHWAY ADMINISTRATION
CENTRAL FEDERAL LANDS HIGHWAY DIVISION

U.S. CUSTOMARY DETAIL

SUPLEMENTAL DETAILS FOR PRECAST CONCRETE BOX CULVERTS

DETAIL APPROVED FOR USE

REVISED:

DETAIL E602-A

6/24/2008 5:17:58 PM N:\FL\FL PFH 12-1(1)\Roadway\sheets\EFL_Plan_Set\S_SHT\S08-FL_PFH12-1(1)_602-A.dgn

REG	STATE	PROJECT	SHEET NO.
8	FL	FL PFH 12-1(1) River Styx Bridges	S9

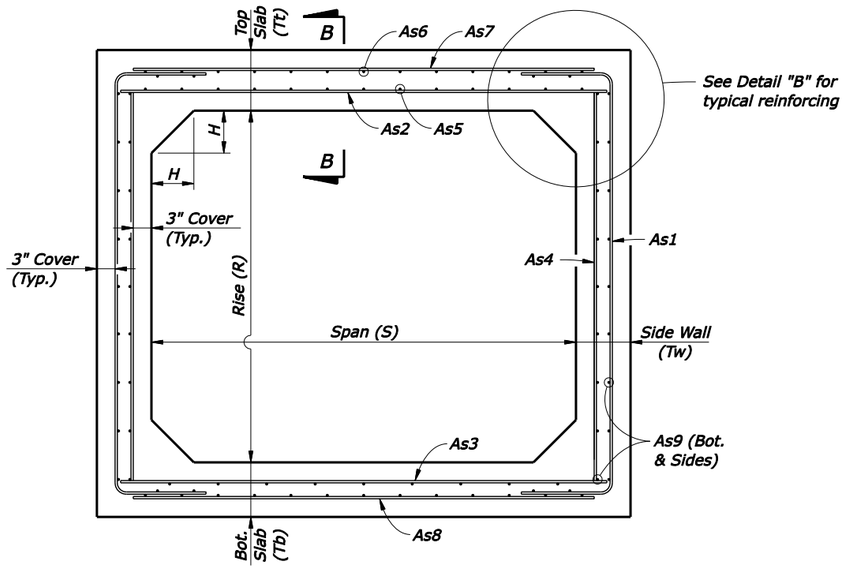

TYPICAL BOX SECTION (TYPE 1)
DESIGN EARTH COVER LESS THAN 2'

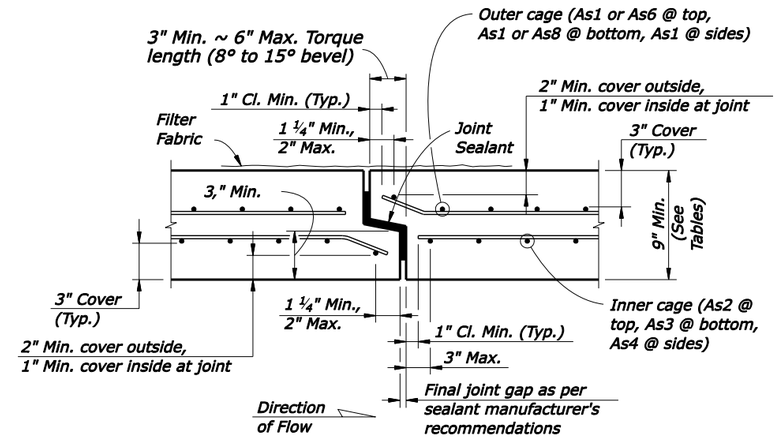

SECTION B-B
TYPICAL SECTION THRU JOINT

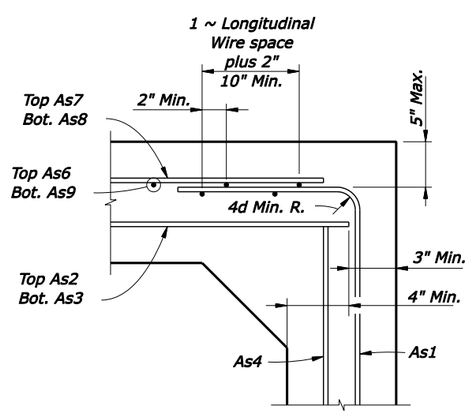

DETAIL "B"
(OPTION 1)

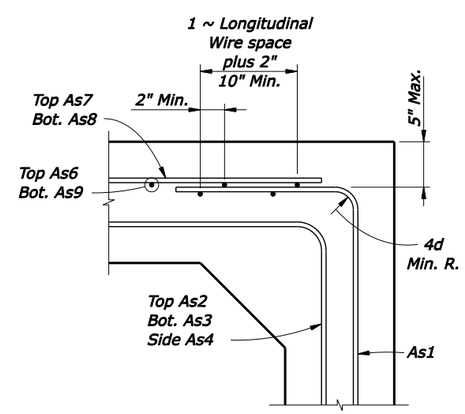

DETAIL "B"
(OPTION 2)

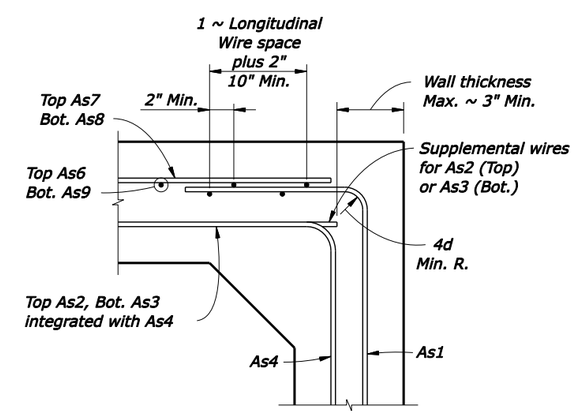

DETAIL "B"
(OPTION 3)

NOTES:
1. Work this sections with Details E552-B thru E602-A.
2. See Detail E602-C for dimensions and areas of reinforcement.

STANDARD PRECAST BOX CULVERT WITH 3" CONCRETE COVER

ADOPTED FROM FDOT STANDARD 00292

U.S. DEPARTMENT OF TRANSPORTATION
FEDERAL HIGHWAY ADMINISTRATION
CENTRAL FEDERAL LANDS HIGHWAY DIVISION

U.S. CUSTOMARY DETAIL

PRECAST CONCRETE BOX CULVERTS

DETAIL APPROVED FOR USE
REVISED:

DETAIL
E602-B

6/24/2008 5:18:25 PM N:\FL\FL PFH 12-1(1)\Roadway\sheets\EFL_Plan_Set\S_SHT\S09-FL_PFH12-1(1)_602-B.dgn

GENERAL NOTES:

1. These precast designs may be substituted for cast-in-place box culverts designed to AASHTO LRFD Bridge Design Specifications, 3rd Edition.

2. Loading: HL-93 & any fill heights between the minimum & maximum shown.

3. Only one design of precast box culvert is to be used for any installation.

4. Reinforcing steel must consist of smooth or deformed welded wire reinforcement (WWR) conforming to ASTM A185 or A497. Longitudinal reinforcement may consist of ASTM A615 Grade 60 bars. Minimum cover must be 3" unless otherwise shown. The spacing of circumferential wires must not be less than 2" nor more than 4". The spacing of longitudinal wires or bars must not be more than 8".

5. As9 longitudinal wires must have a minimum cross-sectional area of 40% of the circumferential wires, but not less than a W2.5 or D2.5 for WWR, or #3 bars for ASTM A615 deformed bars.

6. Welding of reinforcement must be limited to the locations shown in ASTM C1577 and in accordance with ANSI/AWS D1.4 "Structural Welding Code - Reinforcing Steel".

7. Haunch dimensions may vary between the minimum and maximum dimensions shown in the Design Tables but only one haunch dimension must be used within the full length of the box culvert installation.

8. Submittal of redesign calculations are not required for any increase to the slab and/or wall thickness when the minimum reinforcement areas shown in the Design Tables are provided.

TABLE 16 - STANDARD PRECAST BOX CULVERT DESIGNS (3" COVER) - 12' SPANS

SPAN x RISE (S) (R) (ft.)	SLAB / WALL THICKNESS TOP (Tt) (in.)	BOT. (Tb) (in.)	SIDE (Tw) (in.)	HAUNCH (H) (in.)	DESIGN EARTH COVER ABOVE TOP SLAB	REINFORCEMENT AREAS (sq. in./ft.) As1	As2	As3	As4	As5	As6	As7	As8	As9	As1 EXT. LENGTH (M) (in.)
12' x 8'	12	12	12	4 to 12	0.33' - <2'	0.55	0.75	0.63	0.29	0.29	0.29	0.45	0.53	See General Note 5	-
					2' - <3'	0.55	0.75	0.63	0.15	-	-	-	-		66
					3' - <5'	0.55	0.73	0.63	0.15	-	-	-	-		59
					5' - 10'	0.73	0.77	0.79	0.15	-	-	-	-		59
					15'	0.93	1.00	0.99	0.15	-	-	-	-		53
	12	12	12	8 to 12	20'	1.21	1.35	1.31	0.15	-	-	-	-		53
	13	13.5	12		25'	1.35	1.55	1.48	0.15	-	-	-	-		53
	14.5	15	12		30'	1.40	1.67	1.62	0.15	-	-	-	-		53

WELDED WIRE REINFORCEMENT BENDING DIAGRAM

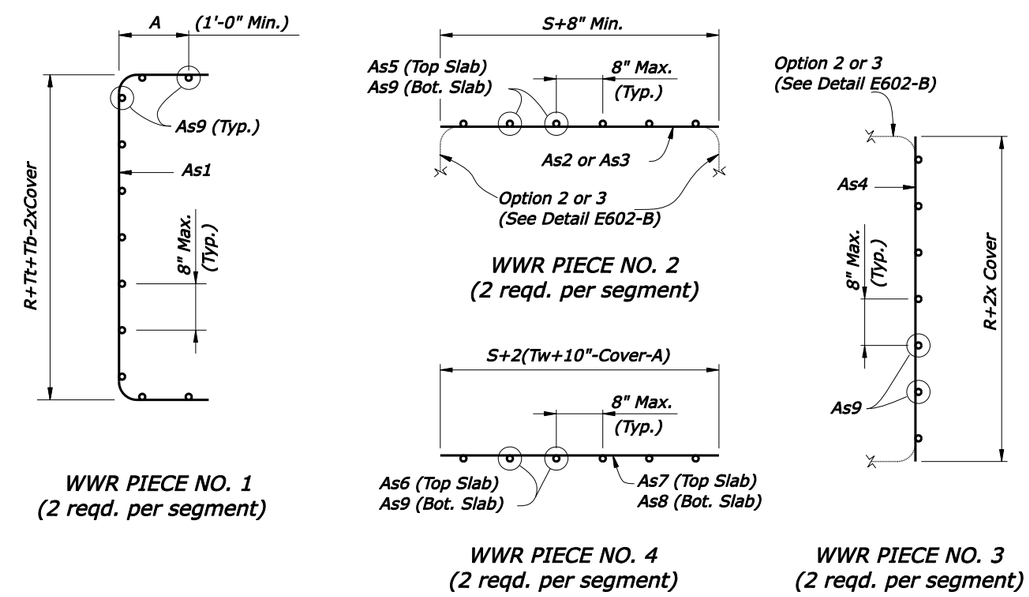

TYPE 1 BOX SECTION (DESIGN EARTH COVER LESS THAN 2')

REINFORCEMENT NOTES:
1. Reinforcement bending dimensions are out-to-out.
2. See General Notes 4, 5 and 6.
3. See Tables 16 for dimensions M, R, S, Tb, Tt and Tw.
4. Dimension "A" is determined by the Manufacturer in accordance with the requirements of Detail "B" on Detail E602-B.

NOTES:
1. See Detail E602-B for Reinforcing Details and dimension locations.

ADOPTED FROM FDOT STANDARD 00292

U.S. DEPARTMENT OF TRANSPORTATION
FEDERAL HIGHWAY ADMINISTRATION
CENTRAL FEDERAL LANDS HIGHWAY DIVISION

U.S. CUSTOMARY DETAIL

PRECAST CONCRETE BOX CULVERTS

DETAIL APPROVED FOR USE

REVISED:

DETAIL E602-C

REG	STATE	PROJECT	SHEET NO.
8	FL	FL PFH 12-1(1) River Styx Bridges	S11

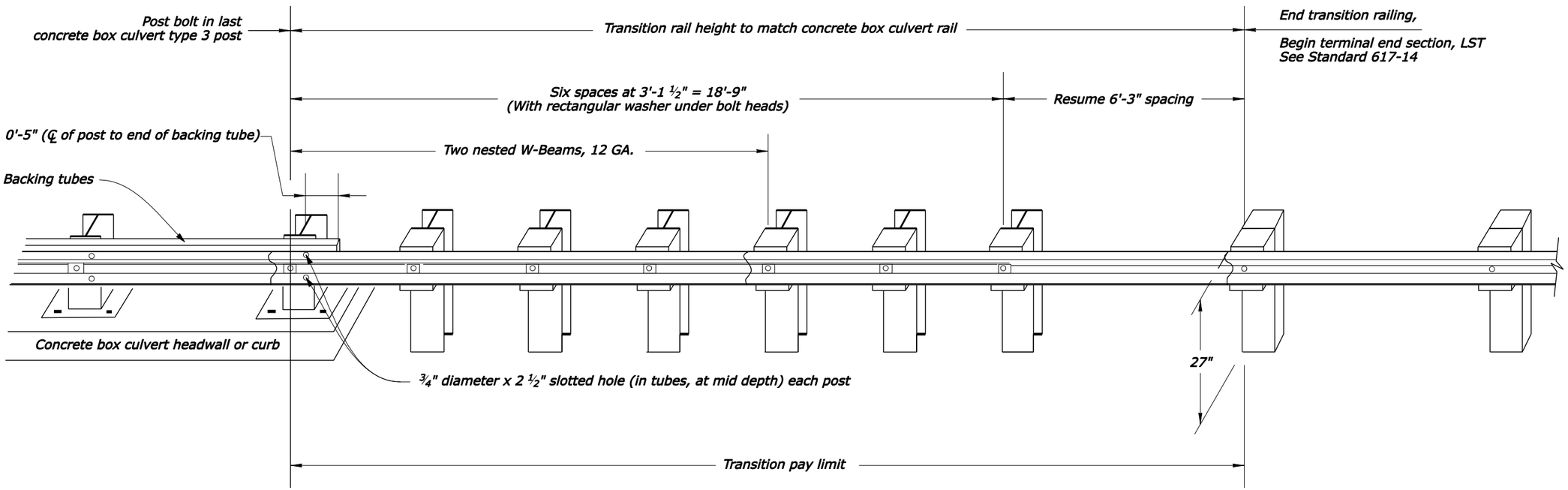

TRANSITION FROM/TO PRECAST CONCRETE BOX CULVERT (PCBC)

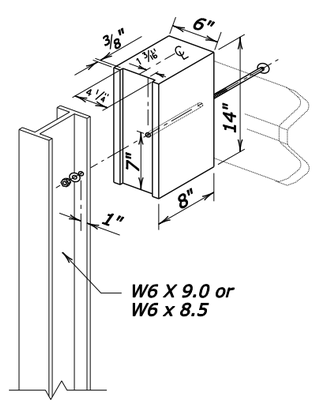

WOOD BLOCKOUT TO
STEEL POST DETAIL

U.S. DEPARTMENT OF TRANSPORTATION
FEDERAL HIGHWAY ADMINISTRATION
CENTRAL FEDERAL LANDS HIGHWAY DIVISION

U.S. CUSTOMARY DETAIL

STRUCTURE TRANSITION, RAILING

DETAIL APPROVED FOR USE

REVISED:

DETAIL
E617-A

6/24/2008 5:19:18 PM N:\FL\FL PFH 12-1(1)\Roadway\sheets\EFL_Plan_Set\S_SHT\S11-FL_PFH12-1(1)_617-A.dgn

REG	STATE	PROJECT	SHEET NO.
8	FL	FL PFH 12-1(1) River Styx Bridges	S12

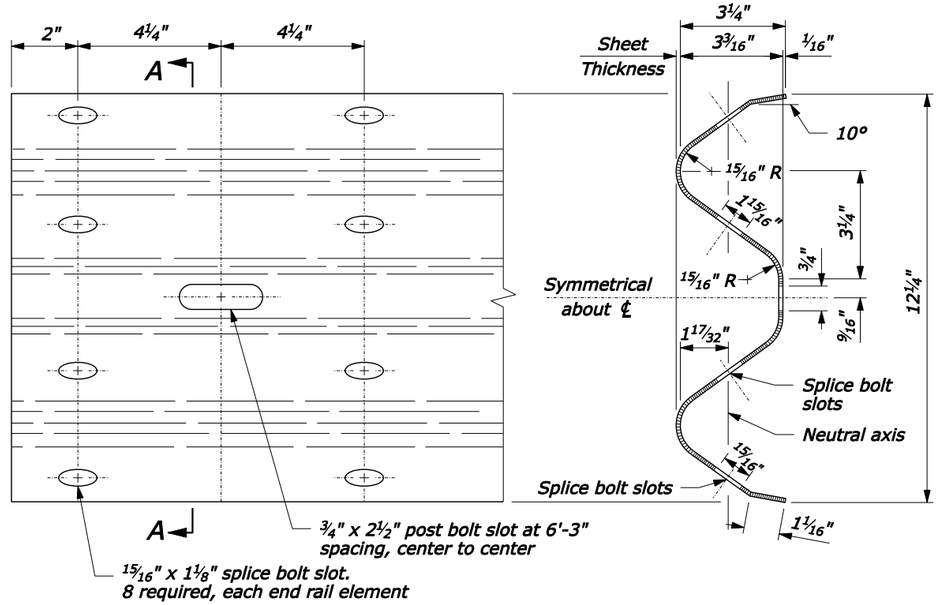

RAIL ELEMENT ELEVATION

SECTION A-A

W BEAM RAIL MEMBERS

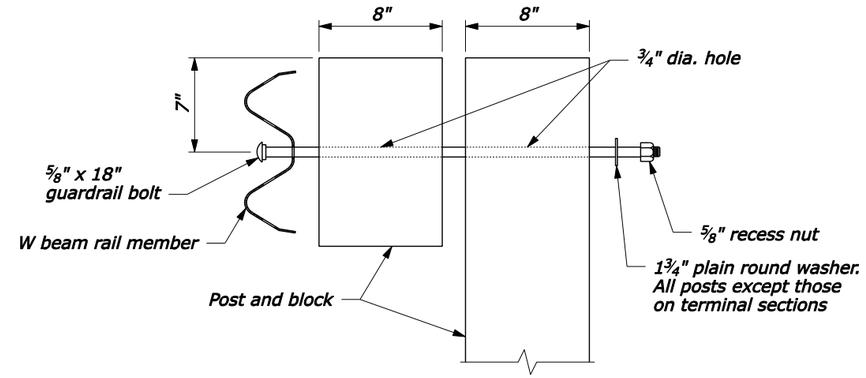

POST BOLT ASSEMBLY

NOTE:

1. Use no more than 3 short guardrail posts in a row.
2. If directed to use alternate hole arrangement, post above ground shall be 31" tall.
3. See Special Contract Requirements when 7'-0" or longer posts are specified.
4. Install reflector tab between post bolt and rail, every fourth post. Alternate reflector tab shapes are acceptable.
5. Dimensional tolerances not shown or implied are intended to be those consistent with the proper functioning of the part, including its appearance, and accepted manufacturing practices.

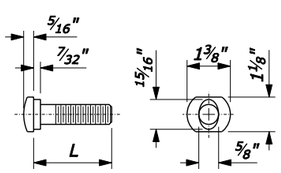

⅝" GUARDRAIL BOLT

L	Thread Length
1⅜"	1⅛" minimum
2"	1¾" minimum
10"	4" minimum
18"	4" minimum
25"	4" minimum

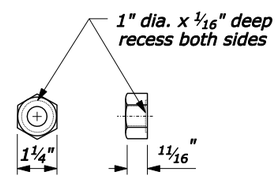

⅝" RECESS NUT

GUARDRAIL BOLT AND RECESS NUT

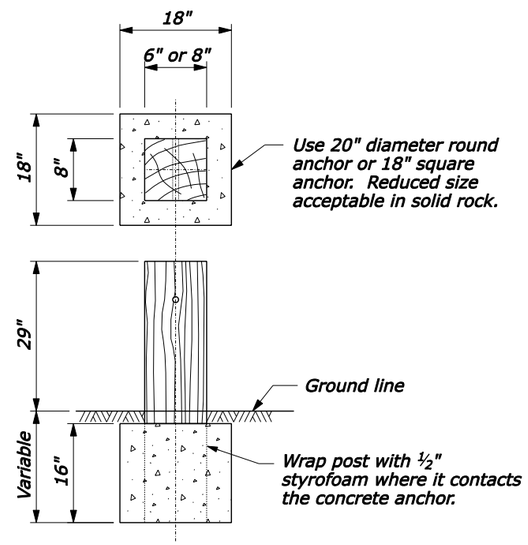

CONCRETE ANCHOR FOR SHORT GUARDRAIL POST

(See Note 1 and 2)

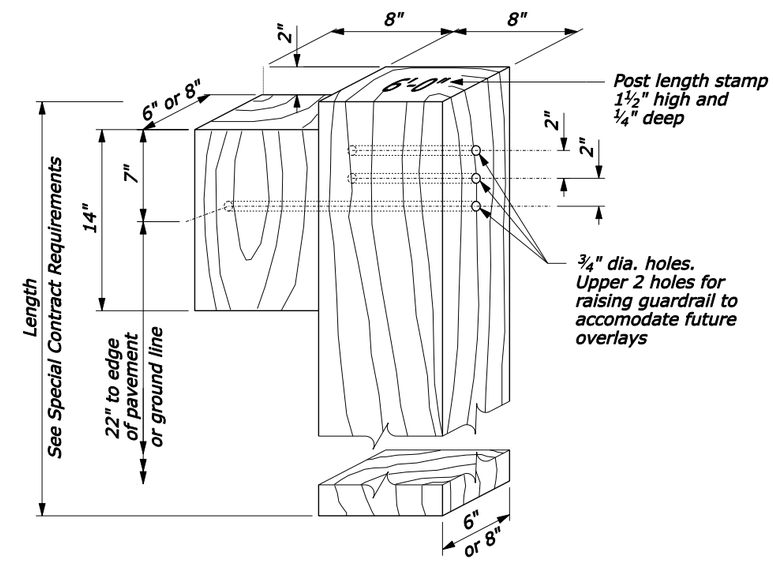

ALTERNATE HOLE ARRANGEMENT POST AND BLOCK DETAIL

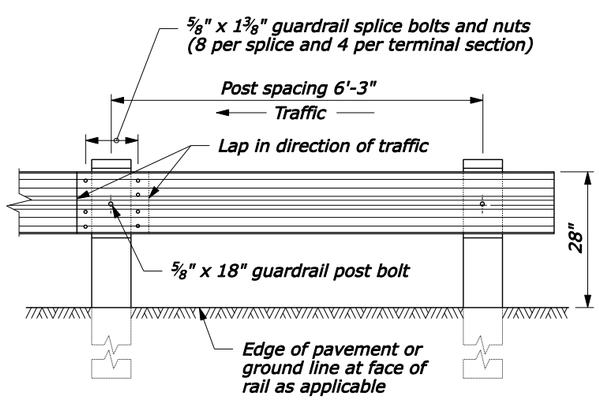

POST SPACING STANDARD POST SECTION

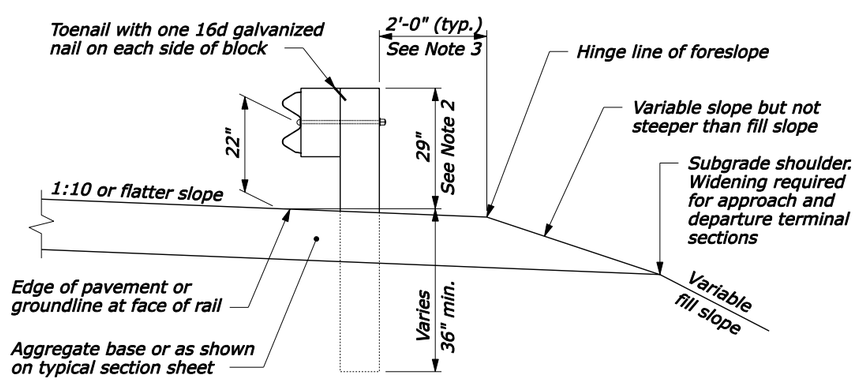

TYPICAL GUARDRAIL CROSS SECTION

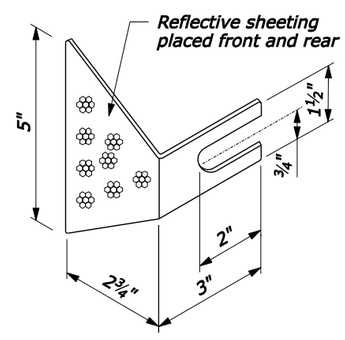

REFLECTOR TAB

(See Note 4)

NO SCALE

U.S. DEPARTMENT OF TRANSPORTATION
FEDERAL HIGHWAY ADMINISTRATION
FEDERAL LANDS HIGHWAY

U.S. CUSTOMARY STANDARD

G4 W-BEAM GUARDRAIL WOOD POSTS

STANDARD APPROVED FOR USE 1/1994
REVISED: 4/1994 6/2005

STANDARD 617-10

6/24/2008 5:19:45 PM N:\FL\FL PFH 12-1(1)\Roadway\sheets\EFL_Plan_Set\S_SHT\S12-FL_PFH12-1(1)_617-10.dgn

REG	STATE	PROJECT	SHEET NO.
8	FL	FL PFH 12-1(1) River Styx Bridges	S13

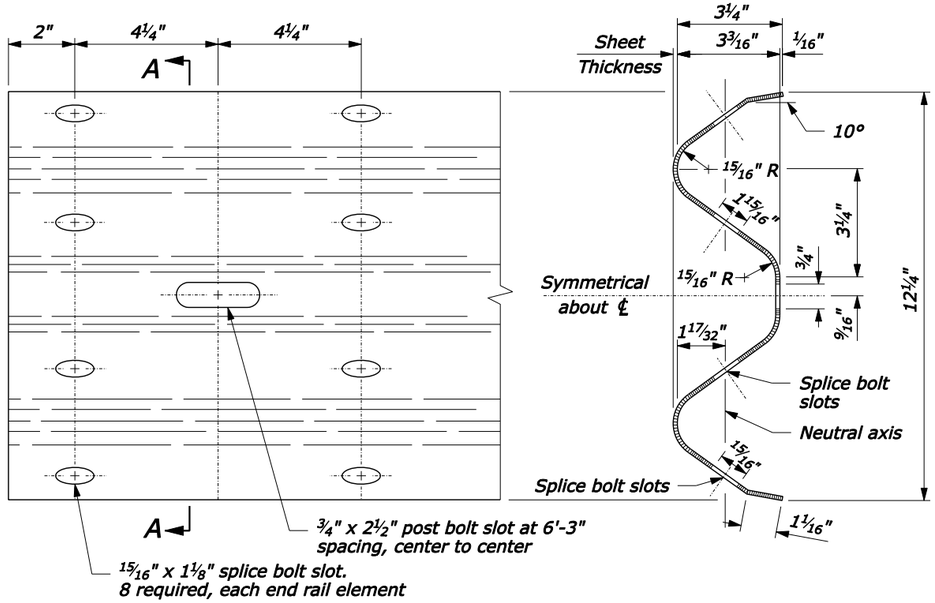

RAIL ELEMENT ELEVATION

SECTION A-A

W BEAM RAIL MEMBERS

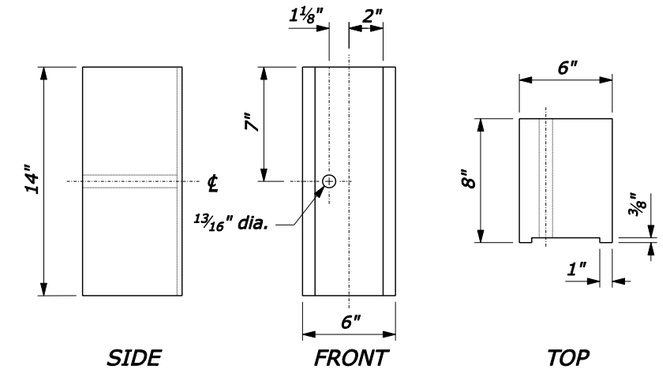

SIDE FRONT TOP

WOOD BLOCK

NOTE:

1. Use no more than 3 short guardrail posts in a row.
2. If directed to use alternate hole arrangement, post above ground shall be 33 inches tall.
3. See Special Contract Requirements when 7'-0" or longer posts are specified.
4. Install reflector tab between post bolt and rail, every fourth post. Alternate reflector tab shapes are acceptable.
5. Dimensional tolerances not shown or implied are intended to be those consistent with the proper functioning of the part, including its appearance, and accepted manufacturing practices.

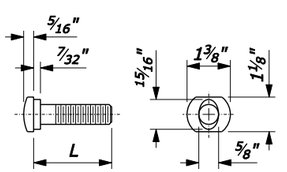

⅝" GUARDRAIL BOLT

L	Thread Length
1⅜"	1⅛" minimum
2"	1¾" minimum
10"	4" minimum
18"	4" minimum
25"	4" minimum

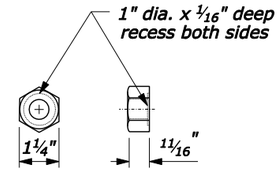

⅝" RECESS NUT

GUARDRAIL BOLT AND RECESS NUT

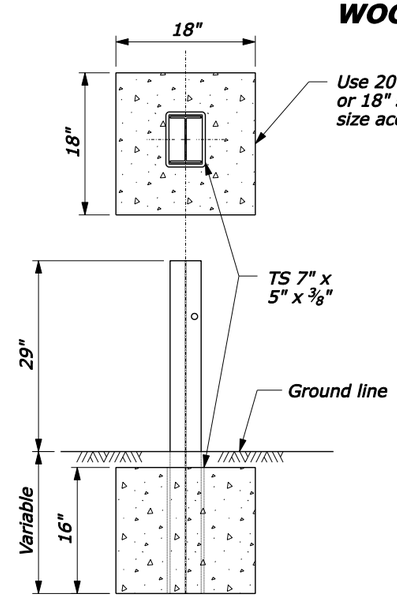

CONCRETE ANCHOR FOR SHORT GUARDRAIL POST

(See Note 1 and 2)

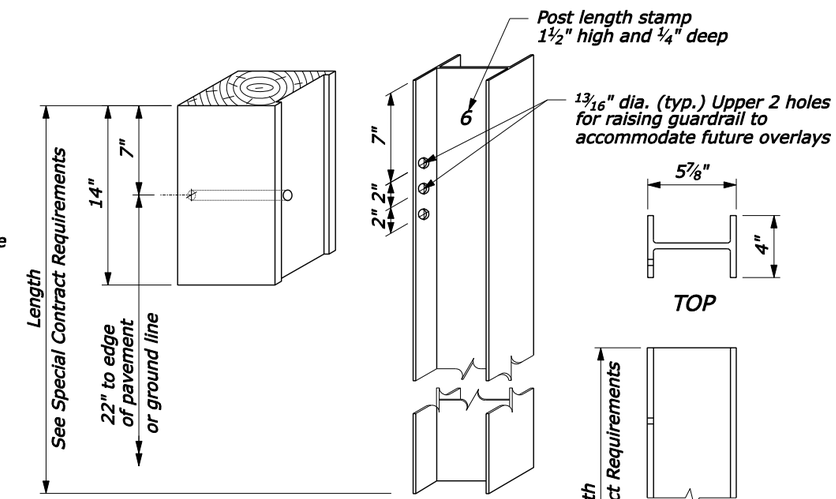

ALTERNATE HOLE ARRANGEMENT POST AND BLOCK DETAIL

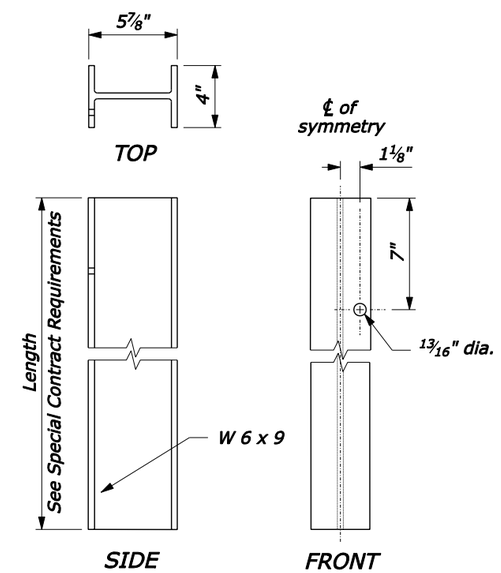

STRUCTURAL SHAPE POST

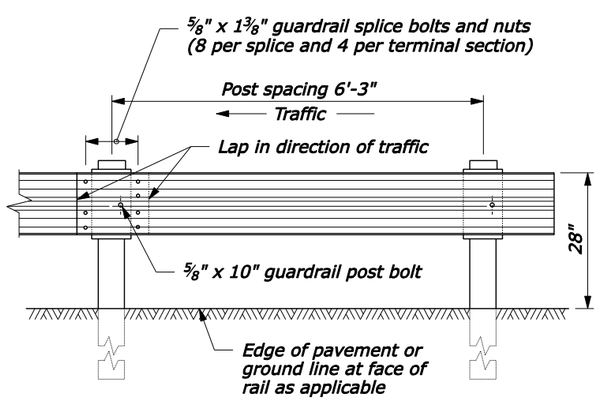

POST SPACING STANDARD POST SECTION

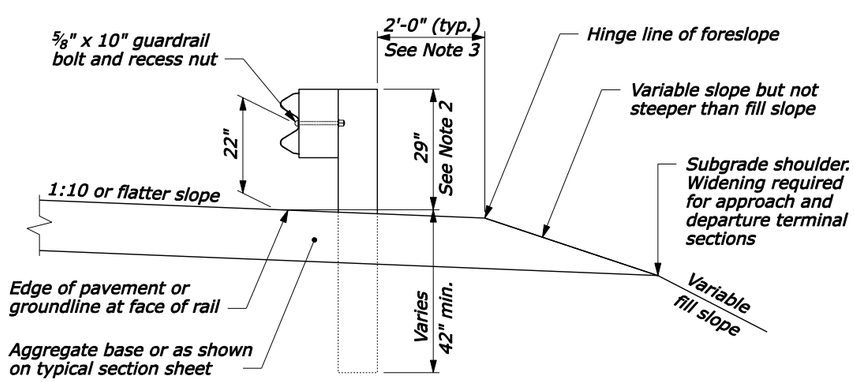

TYPICAL GUARDRAIL CROSS SECTION

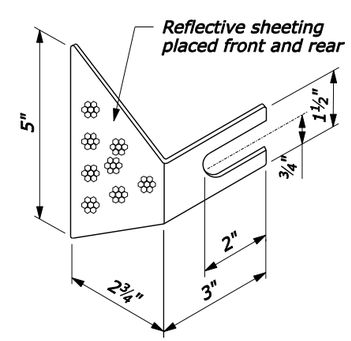

REFLECTOR TAB

(See Note 4)

U.S. DEPARTMENT OF TRANSPORTATION
FEDERAL HIGHWAY ADMINISTRATION
FEDERAL LANDS HIGHWAY OFFICE

U.S. CUSTOMARY STANDARD

G4 W-BEAM GUARDRAIL STEEL POST

STANDARD APPROVED FOR USE XX/XX

REVISED:

STANDARD 617-11

6/24/2008 5:20:08 PM N:\FL\FL PFH 12-1(1)\Roadway\sheets\EFL_Plan_Set\S_SHT\S13-FL_PFH12-1(1)_617-11.dgn

REG	STATE	PROJECT	SHEET NO.
8	FL	FL PFH 12-1(1) River Styx Bridges	S14

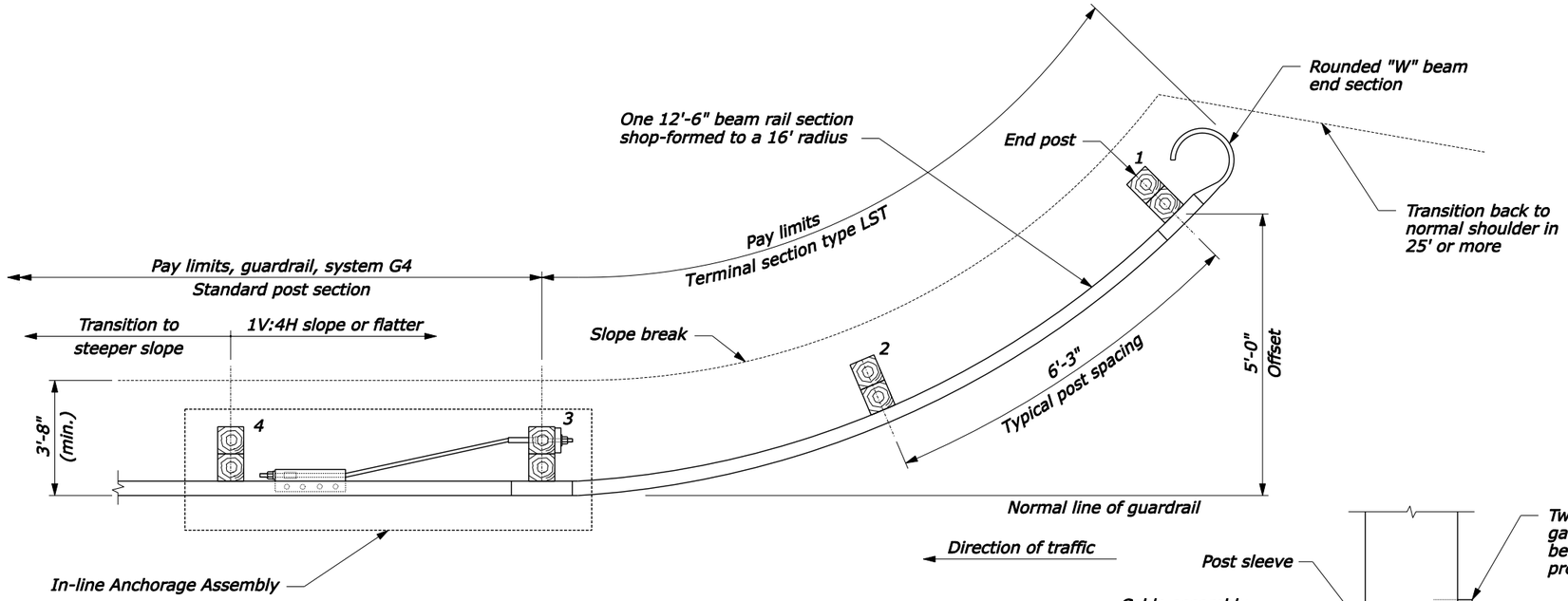

PLAN

NOTE:

1. Pay limits for terminal section type LST include the in-line anchorage assembly at the last two posts of G4 guardrail.
2. Use offset from face of rail to slope break as shown unless otherwise shown on plan.
3. Posts 1 and 2 are standard guardrail posts. See Standard 617-10 for details.
4. See Standard 617-15 for other details.
5. Do not use LST terminal where speeds are in excess of 45 MPH.

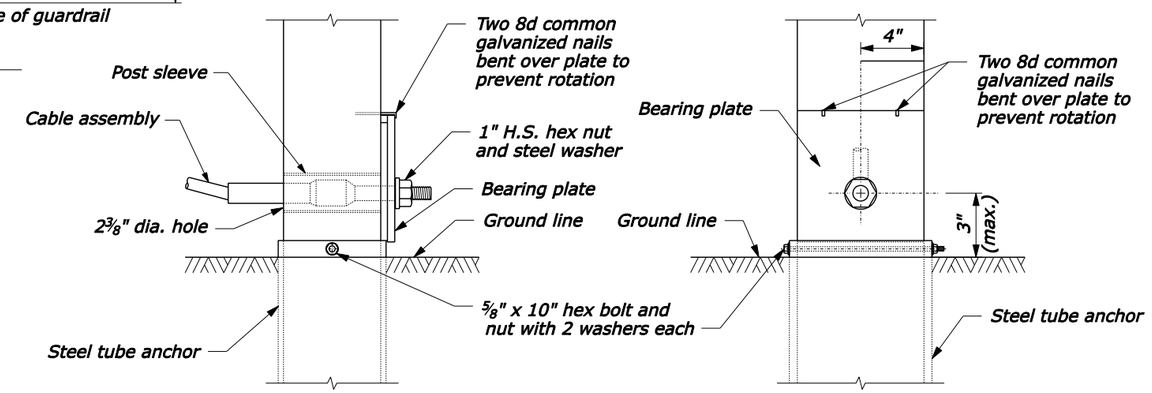

FRONT

RIGHT SIDE

DETAIL A

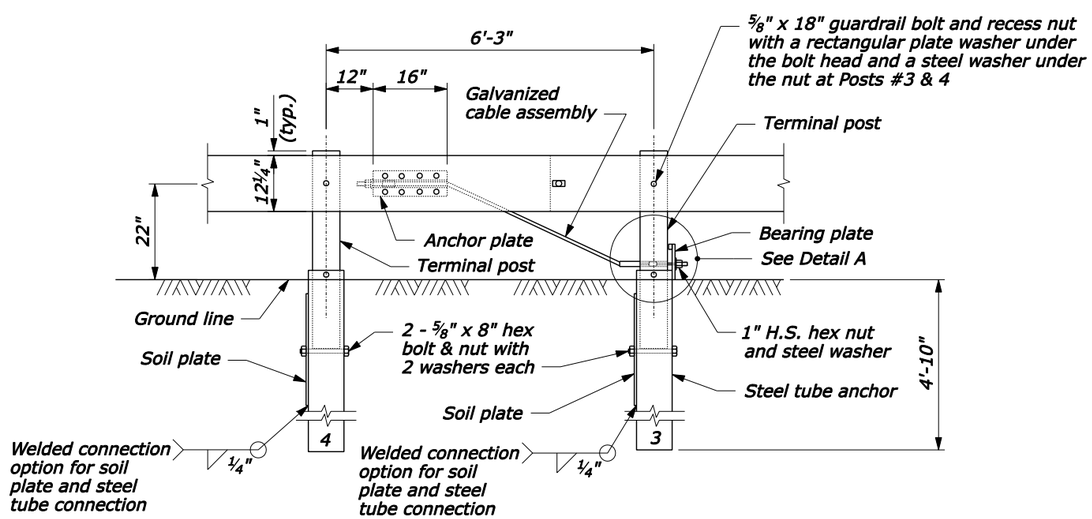

IN-LINE ANCHORAGE ASSEMBLY ELEVATION

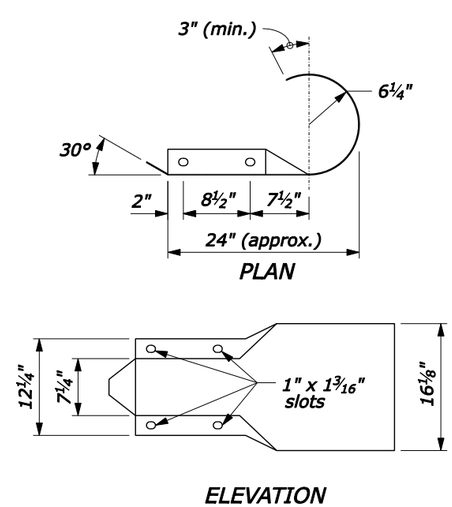

ROUND END SECTION

NO SCALE

U.S. DEPARTMENT OF TRANSPORTATION
FEDERAL HIGHWAY ADMINISTRATION
FEDERAL LANDS HIGHWAY

U.S. CUSTOMARY STANDARD

G4 W-BEAM GUARDRAIL LOW SPEED TERMINAL TYPE LST, WOOD POSTS

STANDARD APPROVED FOR USE 6/2005

REVISED:
DRAFT: 2/2007

STANDARD 617-14

6/24/2008 5:20:33 PM N:\FL\FL PFH 12-1(1)\Roadway\sheets\EFL_Plan_Set\S_SHT\S14-FL_PFH12-1(1)_617-14.dgn

REG	STATE	PROJECT	SHEET NO.
8	FL	FL PFH 12-1(1) River Styx Bridges	S15

NOTE:

1. Dimensional tolerances not shown or implied are intended to be those consistent with the proper functioning of the part, including its appearance, and accepted manufacturing practices.

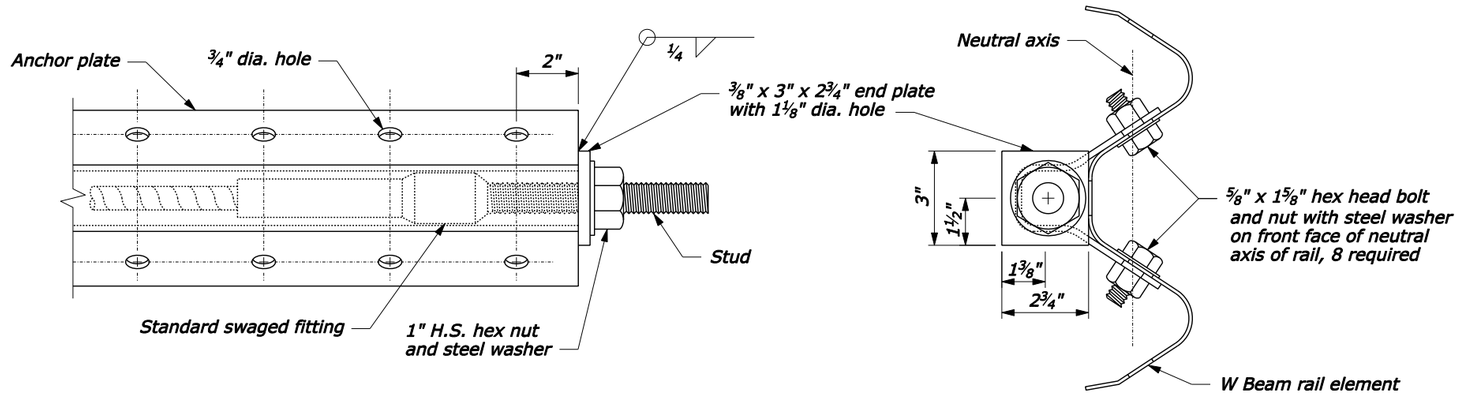

ANCHOR PLATE DETAILS FOR LST ANCHORAGE ASSEMBLY

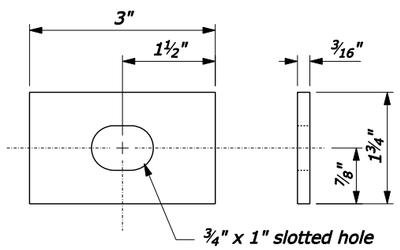

RECTANGULAR PLATE WASHER

(Use to attach the section to the post of anchorage assembly)

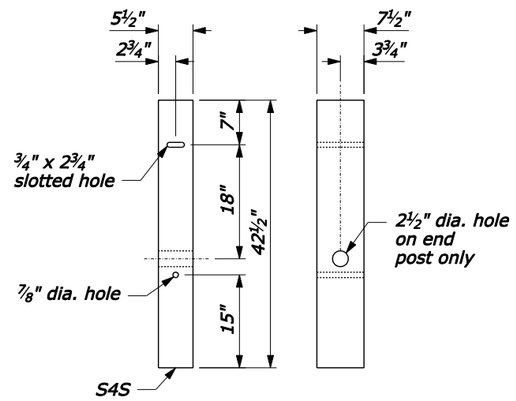

TERMINAL POST

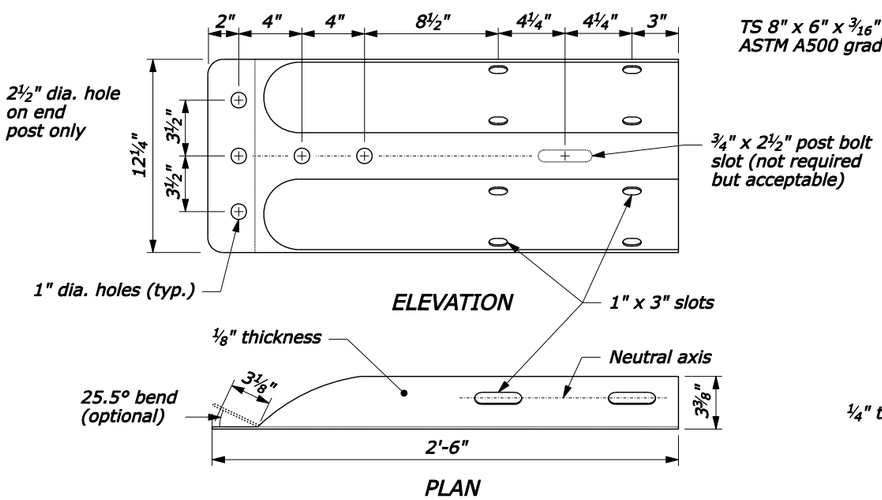

TERMINAL CONNECTOR

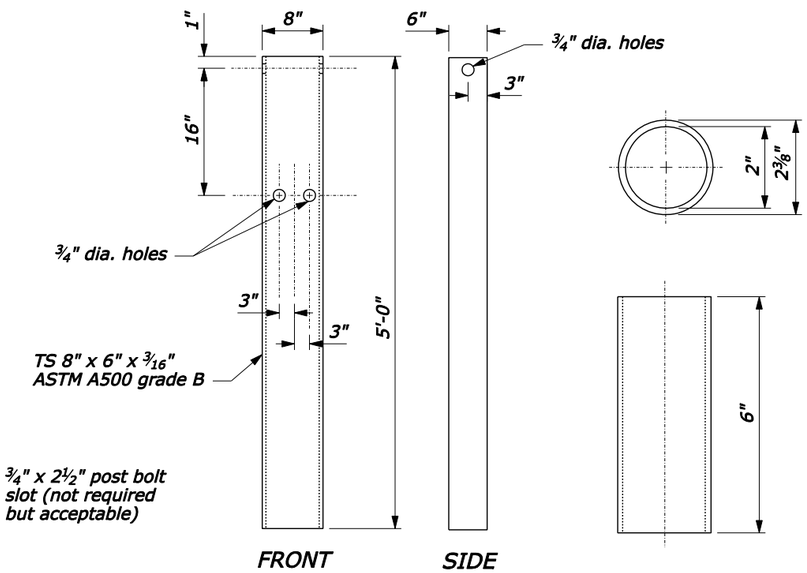

STEEL TUBE ANCHOR

POST SLEEVE

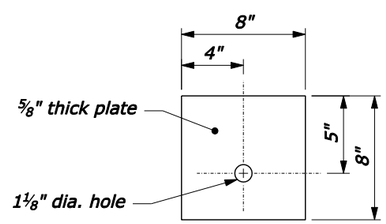

BEARING PLATE

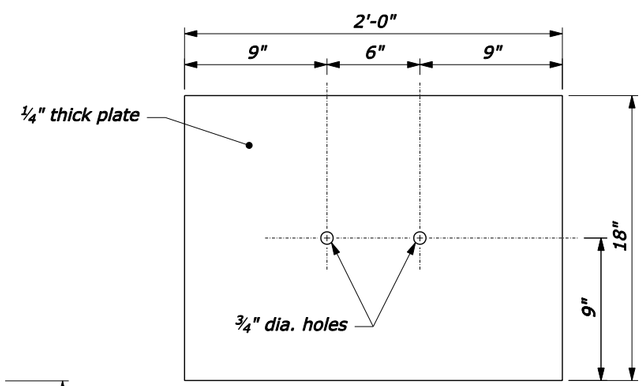

SOIL PLATE

(2 REQUIRED)

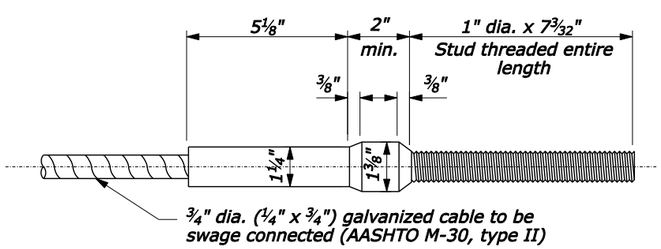

CABLE ASSEMBLY

(Standard swaged fitting and stud)

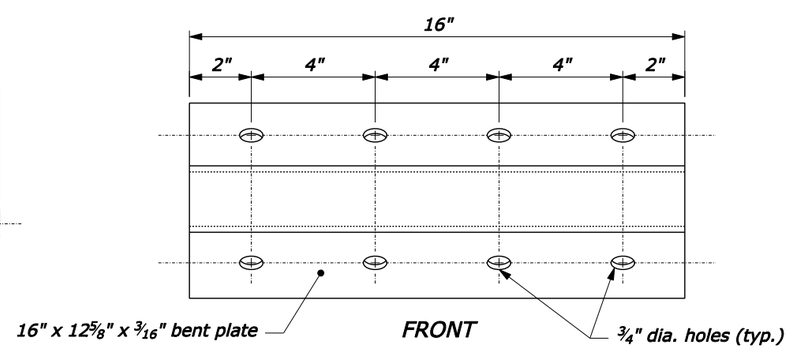

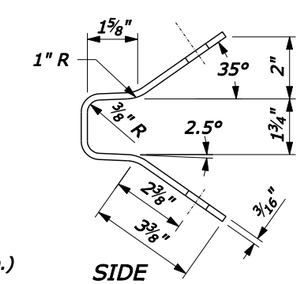

GUARDRAIL ANCHOR PLATE

NO SCALE

U.S. DEPARTMENT OF TRANSPORTATION
FEDERAL HIGHWAY ADMINISTRATION
FEDERAL LANDS HIGHWAY

U.S. CUSTOMARY STANDARD

G4 W-BEAM GUARDRAIL MELT, LST & CRT ANCHORAGE ASSEMBLY DETAILS

STANDARD APPROVED FOR USE 1/1994

REVISED: 4/1994 6/2005
DRAFT: 3/2007

STANDARD 617-15

6/24/2008 5:21:02 PM N:\FL\FL PFH 12-1(1)\Roadway\sheets\EFL_Plan_Set\S_SHT\S15-FL_PFH12-1(1)_617-15.dgn

REG	STATE	PROJECT	SHEET NO.
8	FL	FL PFH 12-1(1) River Styx Bridges	S16

NOTE:

1. Use Type III or higher type sheeting on all signs and channelizing devices. Warning lights are not normally needed on devices with Type III or higher type sheeting, but may be beneficial to attract the drivers attention in fog or other special conditions. When used, apply the appropriate type of warning light (Type A, B, C, or D) per the MUTCD Chapter 6F.
2. Ensure all sign supports exposed to impact by traffic meet the requirements of NCHRP-350 for crash worthiness.
3. Do not store traffic control devices along the roadway when not in use. Cover post-mounted signs when not applicable.
4. State standards may be used as an alternative if approved by the CO.

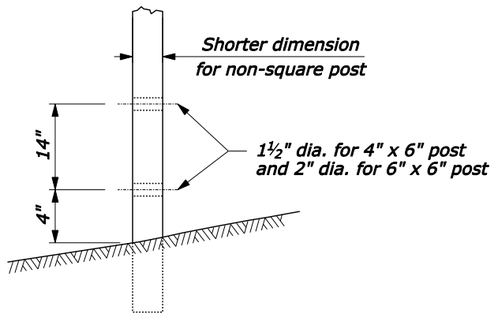

POST DETAIL

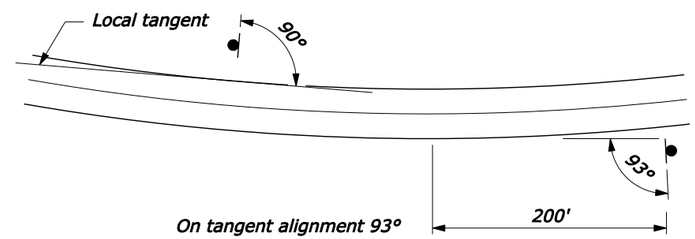

SIGN INSTALLATION ANGLE

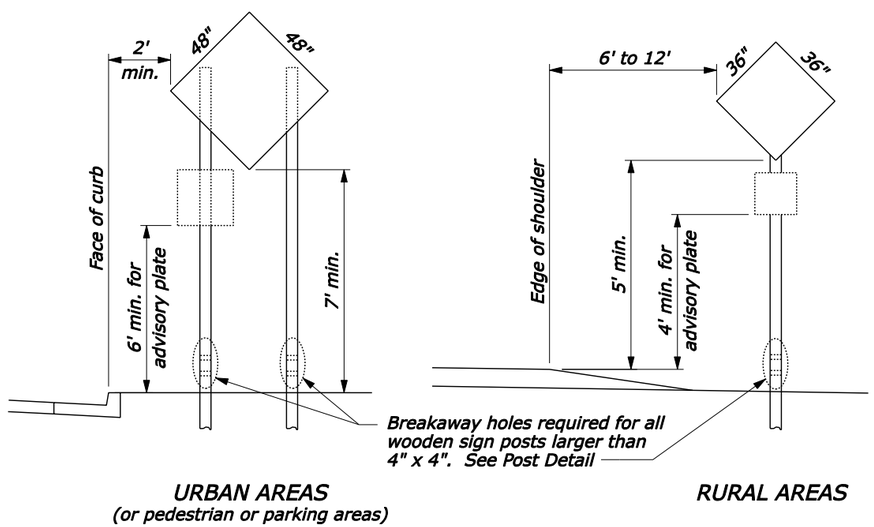

NOTE: Mount signs with area 9 sqft and under on a single 4" x 4" wood post. Use double wood posts for signs wider than 36" or signs with an area over 9 sqft. Steel may be used in lieu of wood posts (See Note 2)

SIGN PLACEMENT

NO SCALE

U.S. DEPARTMENT OF TRANSPORTATION
FEDERAL HIGHWAY ADMINISTRATION
FEDERAL LANDS HIGHWAY

U.S. CUSTOMARY STANDARD

TEMPORARY TRAFFIC CONTROL SIGN INSTALLATION

STANDARD APPROVED FOR USE 6/2005

REVISED:
DRAFT: 11/2007

STANDARD
635-14

6/24/2008 5:21:30 PM N:\FL\FL PFH 12-1(1)\Roadway\sheets\EFL_Plan_Set\S_SHT\S16-FL_PFH12-1(1)_635-14.dgn

REG	STATE	PROJECT	SHEET NO.
8	FL	FL PFH 12-1(1) River Styx Bridges	T1

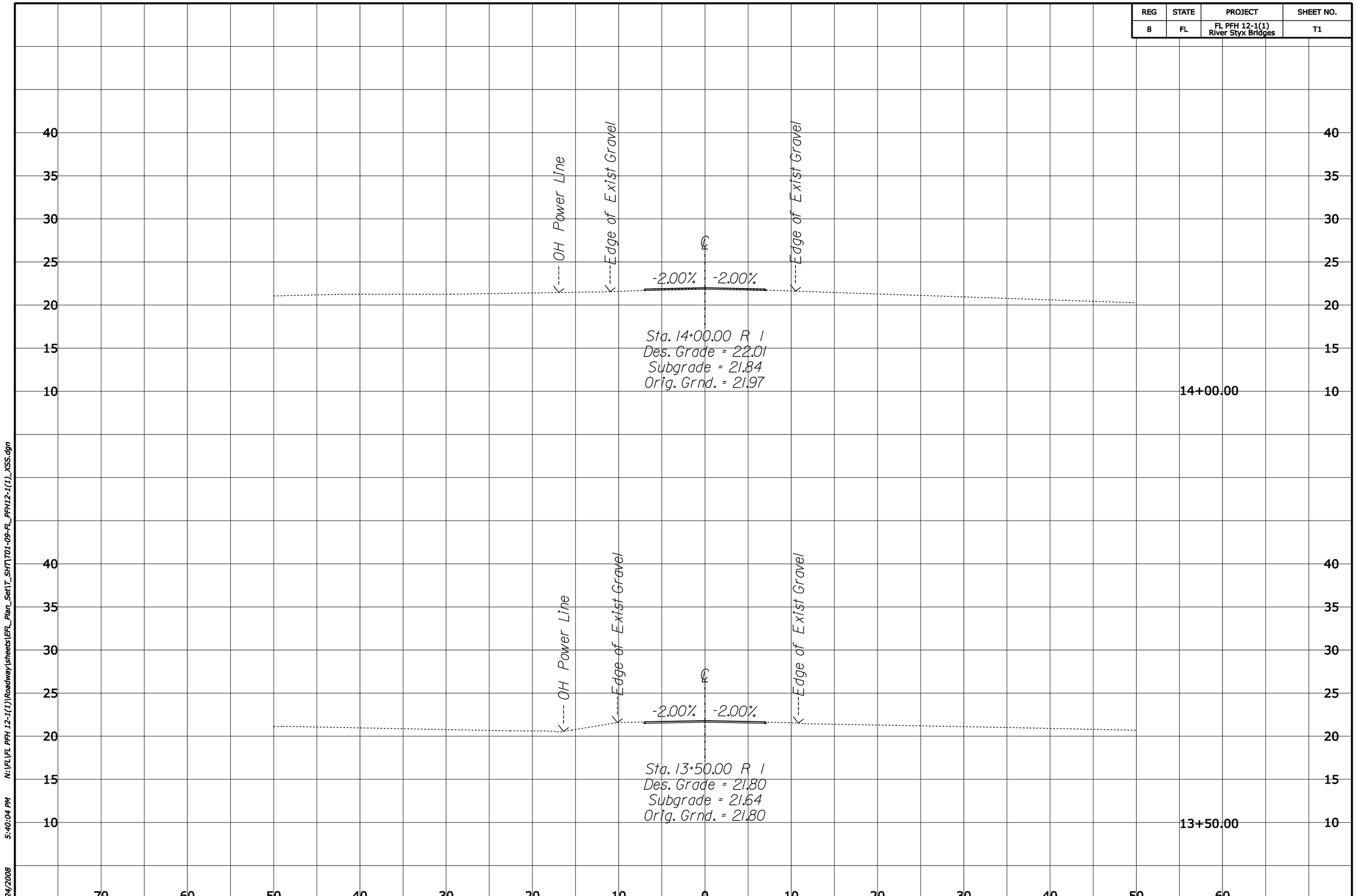

N:\FL\FL PFH 12-1(1)\Roadway\sheets\EFL_Plan_Set\T_SHT\T01-09-FL_PFH12-1(1)_XSS.dgn
5:40:04 PM
6/24/2008

REG	STATE	PROJECT	SHEET NO.
8	FL	FL PFH 12-1(1) River Styx Bridges	T2

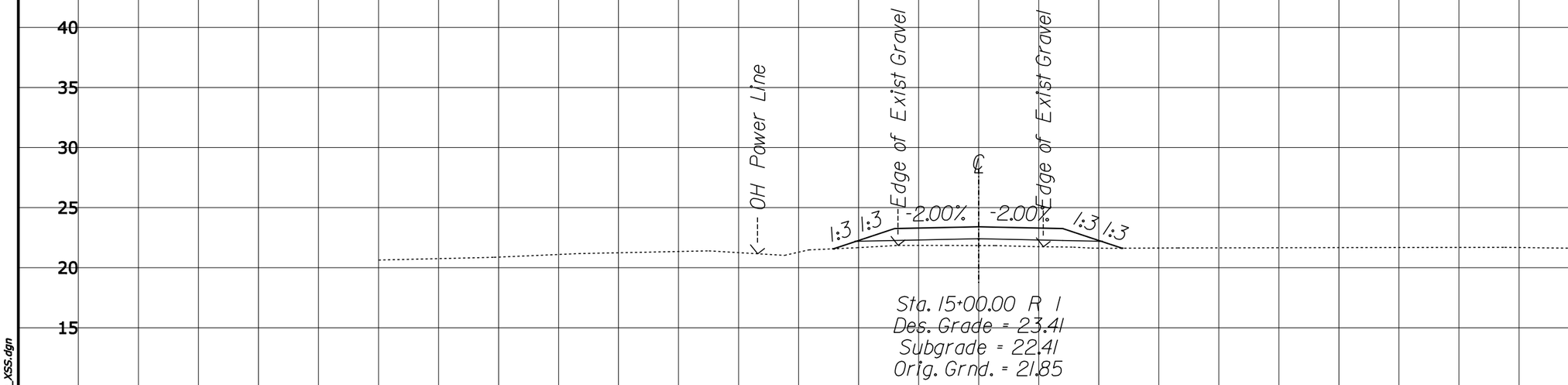

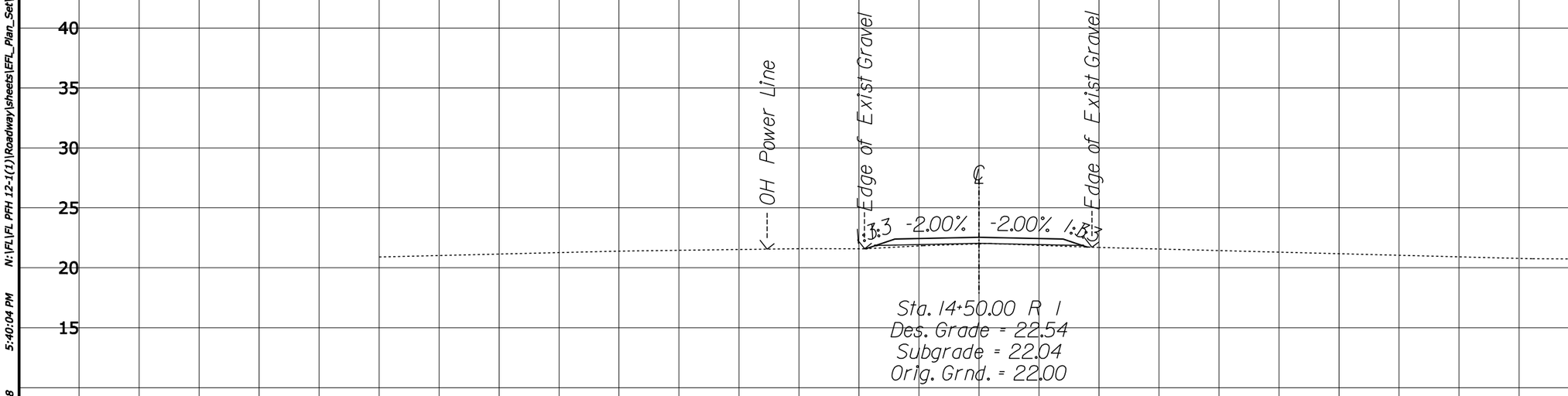

40 35 30 25 20 15

70 60 50 40 30 20 10 0 10 20 30 40 50 60

N:\FL\FL PFH 12-1(1)\Roadway\sheets\EFL_Plan_Set\T_SHT\T01-09-FL_PFH12-1(1)_XSS.dgn

6/24/2008 5:40:04 PM

REG	STATE	PROJECT	SHEET NO.
8	FL	FL PFH 12-1(1) River Styx Bridges	T3

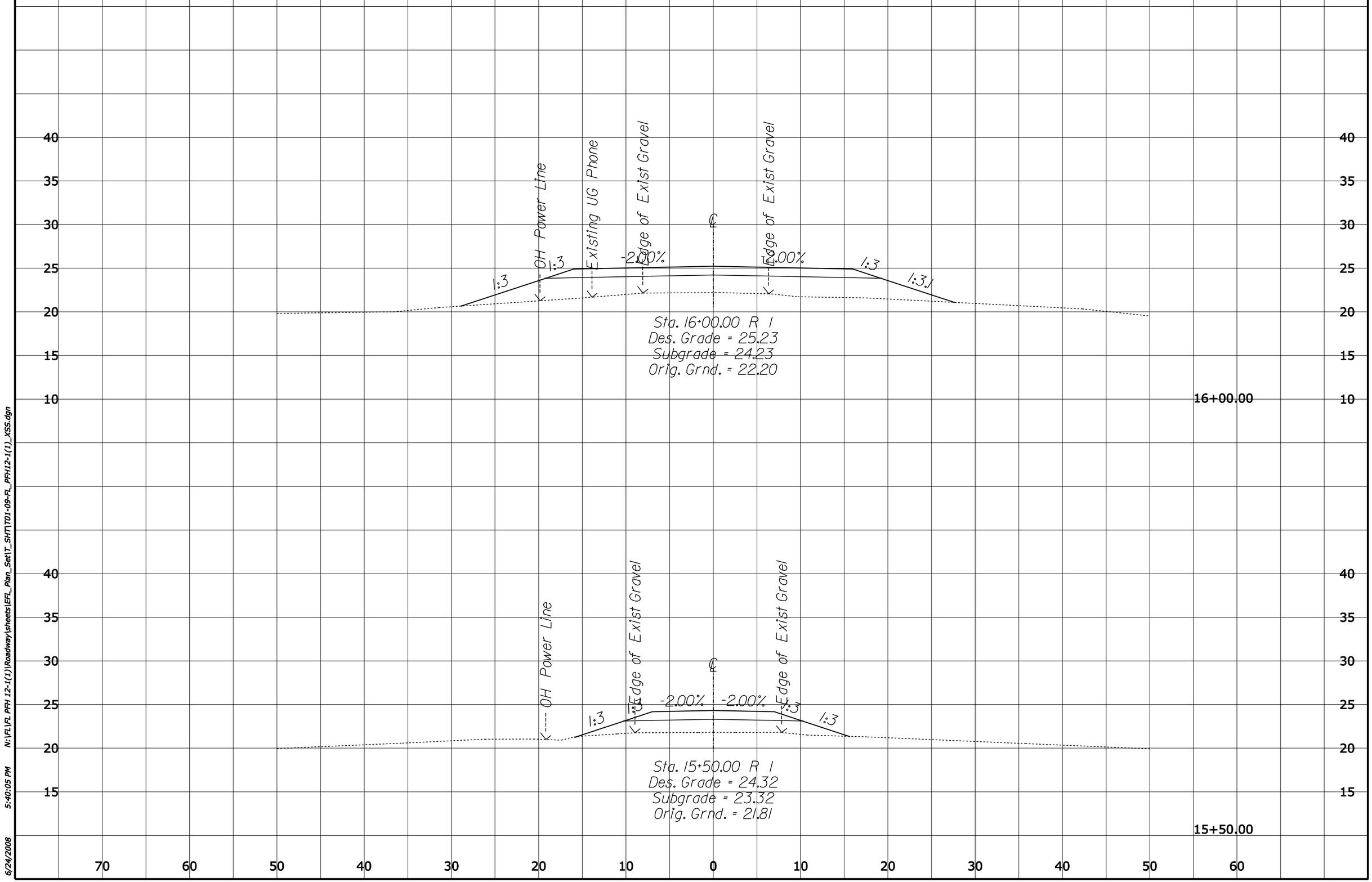

N:\FL\FL PFH 12-1(1)\Roadway\sheets\EFL_Plan_Set\T_SHT\T01-09-FL_PFH12-1(1)_XSS.dgn 5:40:05 PM 6/24/2008

REG	STATE	PROJECT	SHEET NO.
8	FL	FL PFH 12-1(1) River Styx Bridges	T4

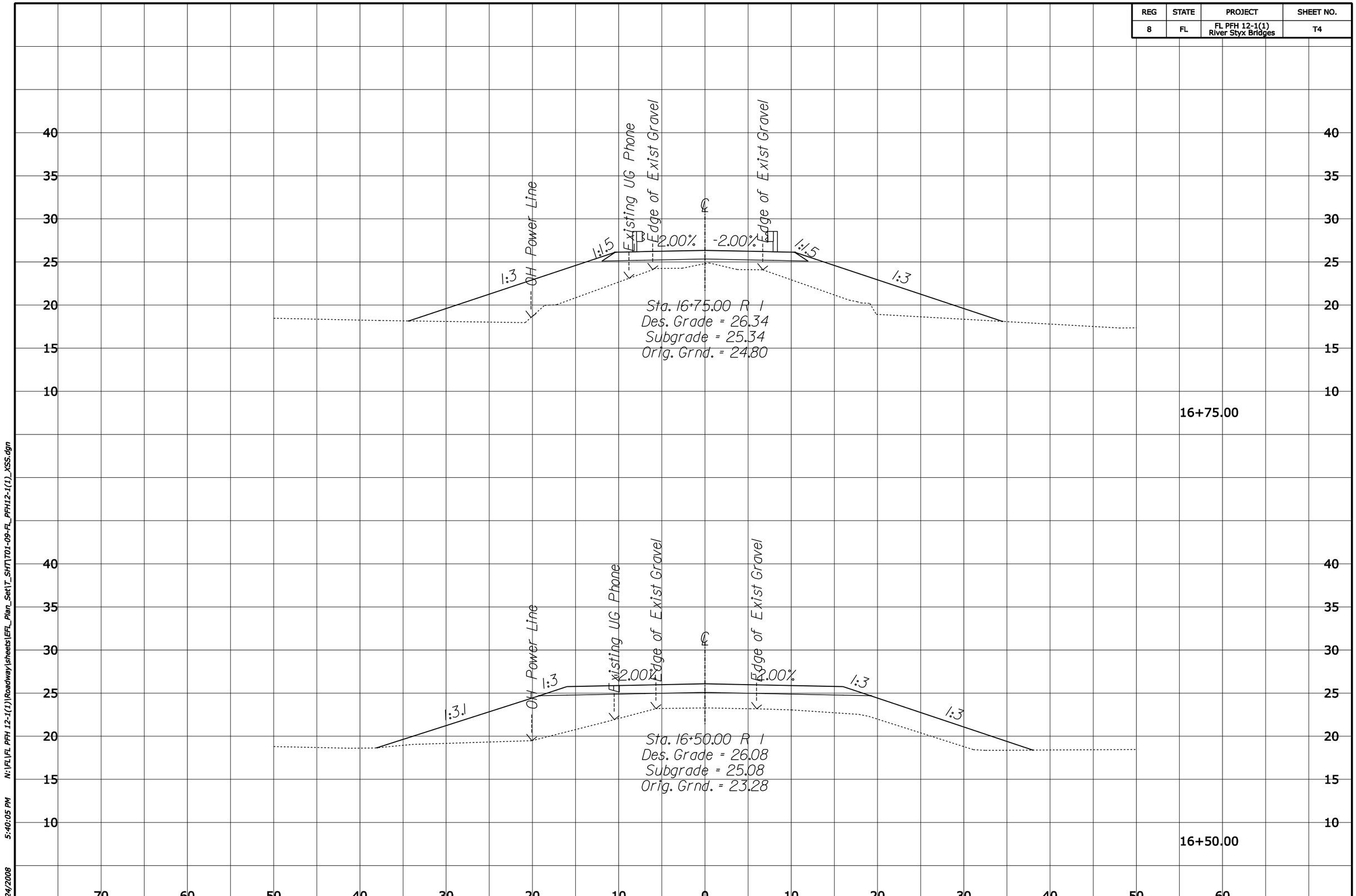

N:\FL\FL PFH 12-1(1)\Roadway\sheets\EFL_Plan_Set\T_SHT\T01-09-FL_PFH12-1(1)_XSS.dgn
5:40:05 PM
6/24/2008

REG	STATE	PROJECT	SHEET NO.
8	FL	FL PFH 12-1(1) River Styx Bridges	T5

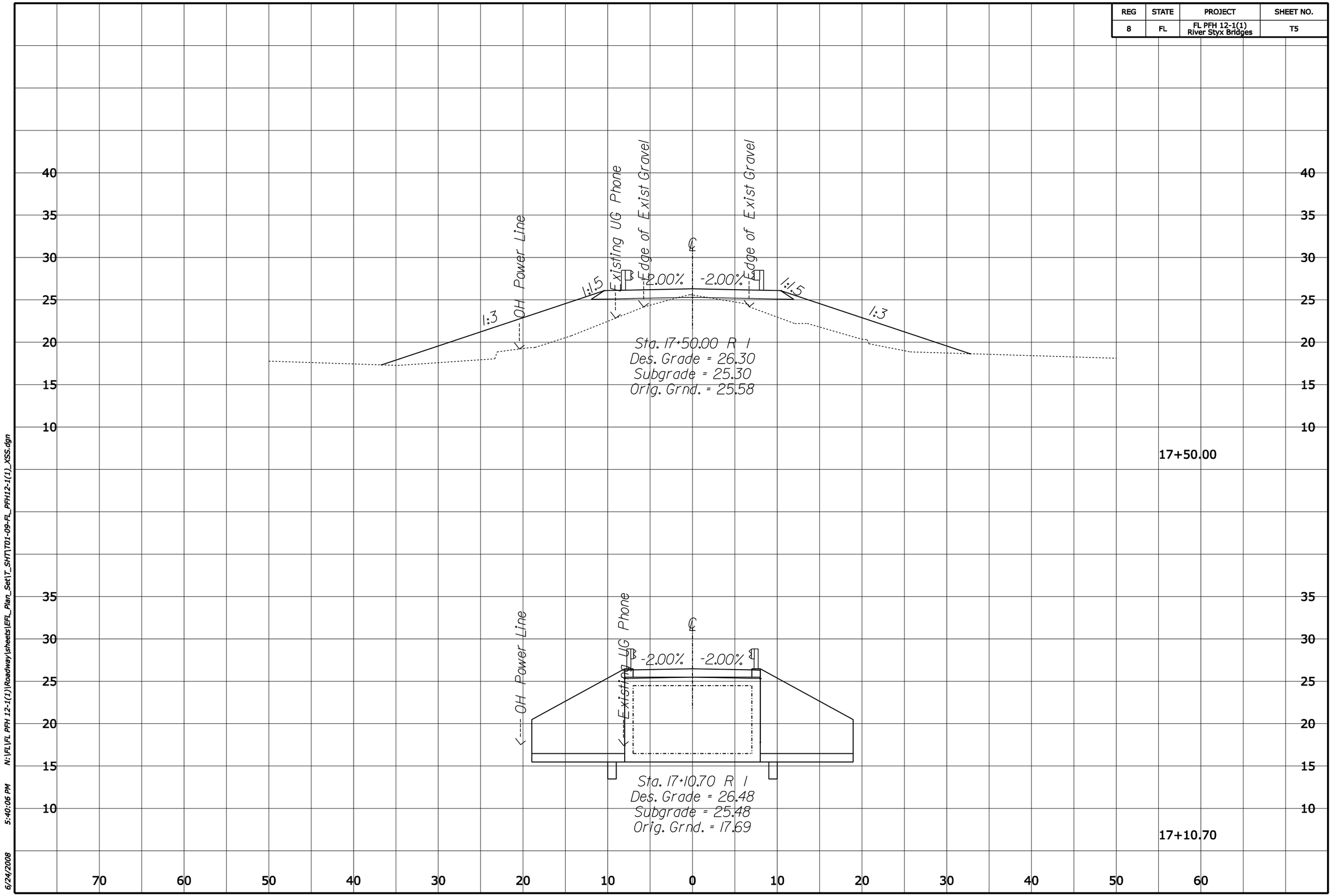

6/24/2008 5:40:06 PM N:\FL\FL PFH 12-1(1)\Roadway\sheets\EFL_Plan_Set\T_SHT\T01-09-FL_PFH12-1(1)_XSS.dgn

REG	STATE	PROJECT	SHEET NO.
8	FL	FL PFH 12-1(1) River Styx Bridges	T6

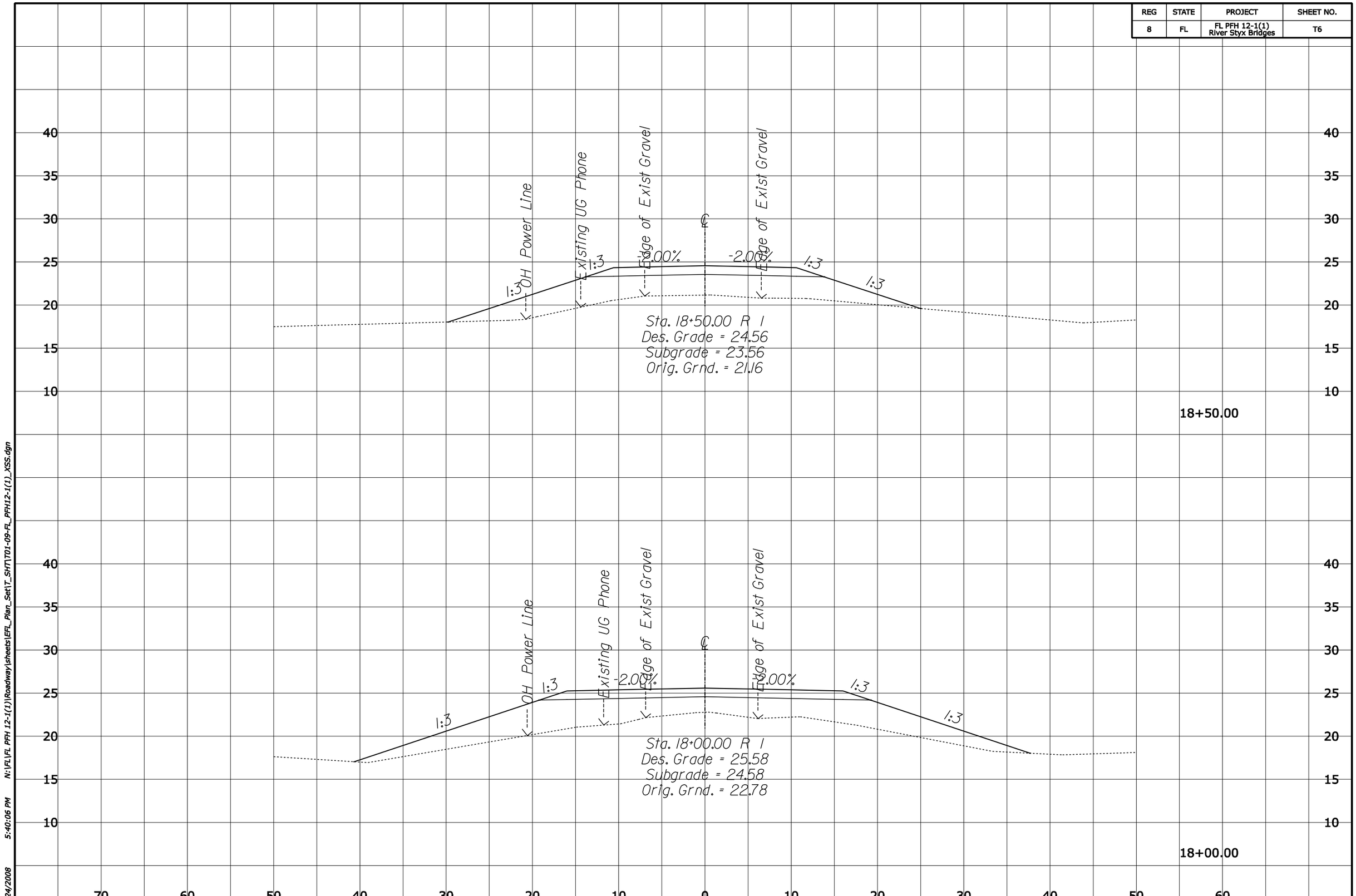

N:\FL\FL PFH 12-1(1)\Roadway\sheets\EFL_Plan_Set\T_SHT\T01-09-FL_PFH12-1(1)_XSS.dgn
5:40:05 PM
6/24/2008

REG	STATE	PROJECT	SHEET NO.
8	FL	FL PFH 12-1(1) River Styx Bridges	T7

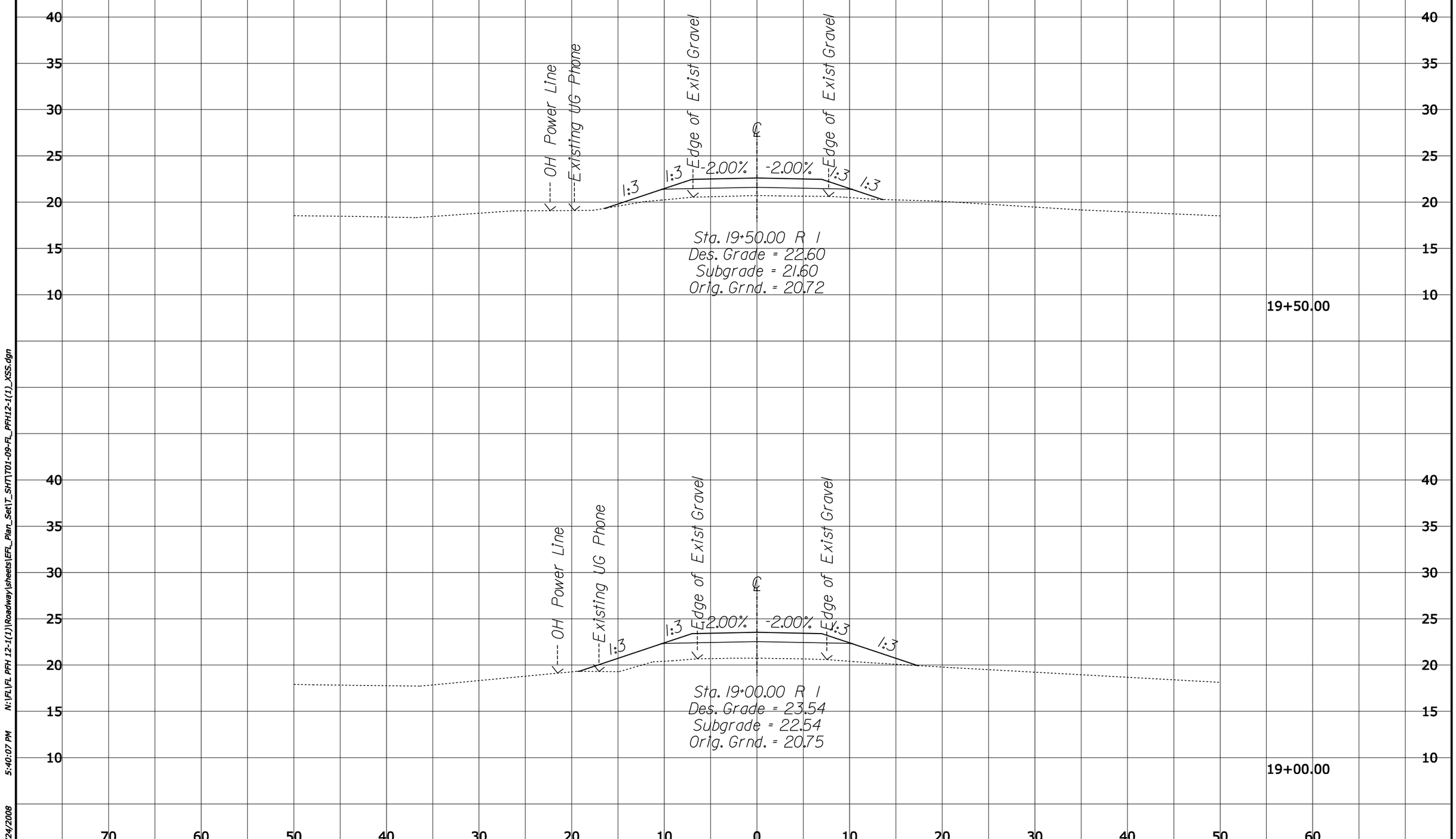

N:\FL\FL PFH 12-1(1)\Roadway\sheets\EFL_Plan_Set\T_SHT\T01-09-FL_PFH12-1(1)_XSS.dgn
5:40:07 PM
6/24/2008

REG	STATE	PROJECT	SHEET NO.
8	FL	FL PFH 12-1(1) River Styx Bridges	T8

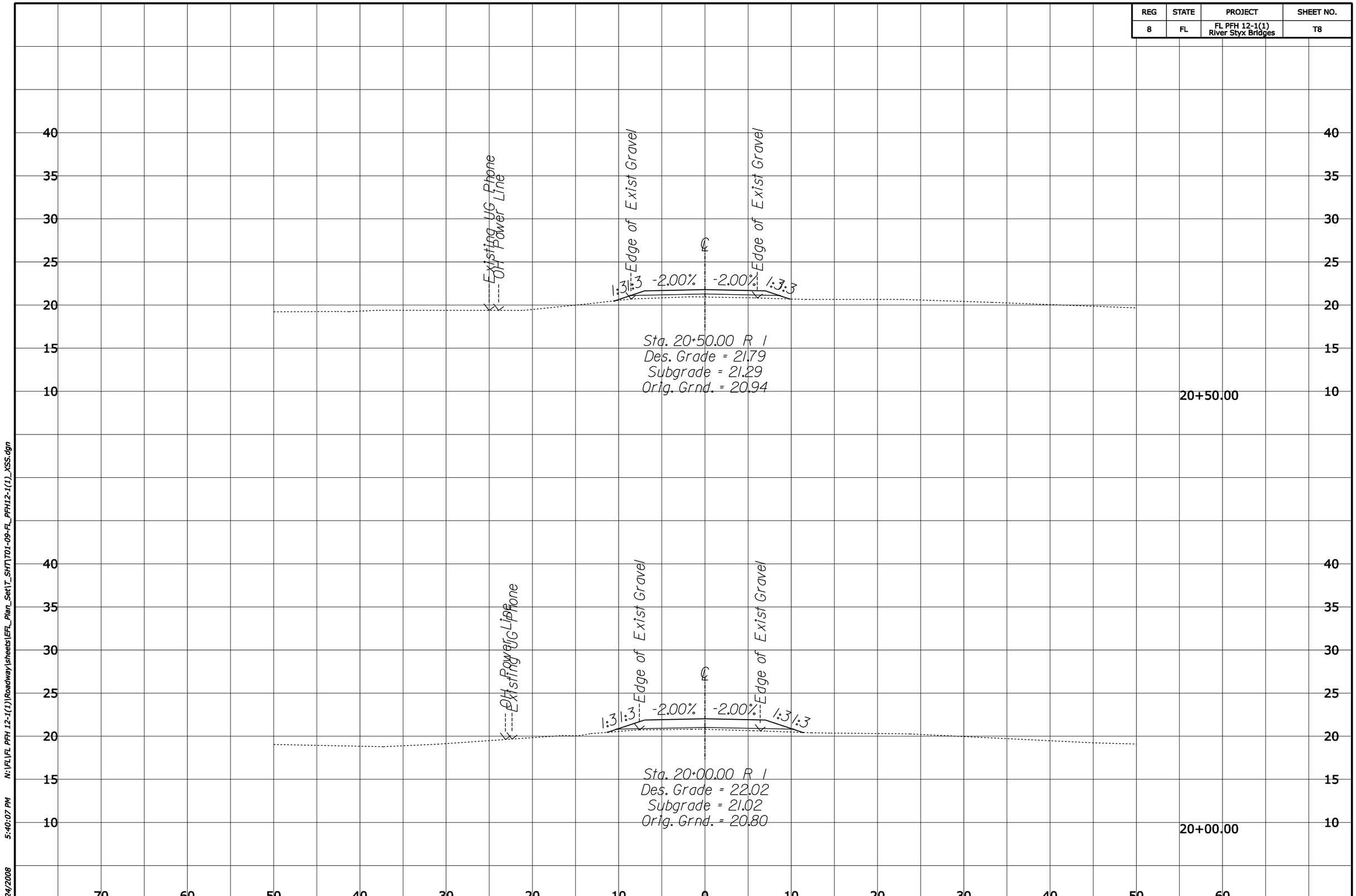

N:\FL\FL PFH 12-1(1)\Roadway\sheets\EFL_Plan_Set\T_SHT\T01-09-FL_PFH12-1(1)_XSS.dgn

6/24/2008 5:40:07 PM

REG	STATE	PROJECT	SHEET NO.
8	FL	FL PFH 12-1(1) River Styx Bridges	T9

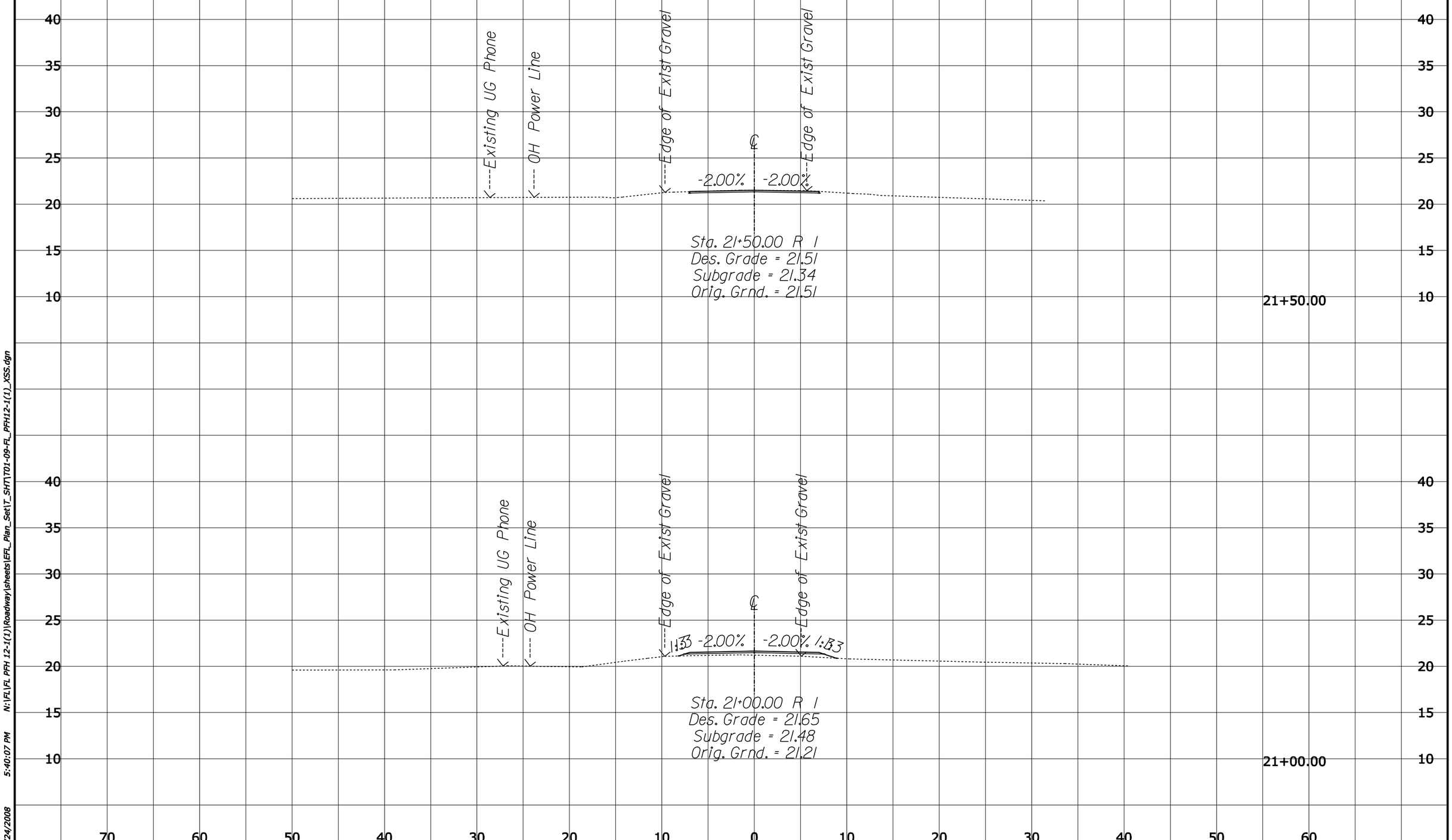

N:\FL\FL PFH 12-1(1)\Roadway\sheets\EFL_Plan_Set\T_SHT\T01-09-FL_PFH12-1(1)_XSS.dgn
5:40:07 PM
6/24/2008

REG	STATE	PROJECT	SHEET NO.
8	FL	FL PFH 12-1(1) River Styx Bridges	T10

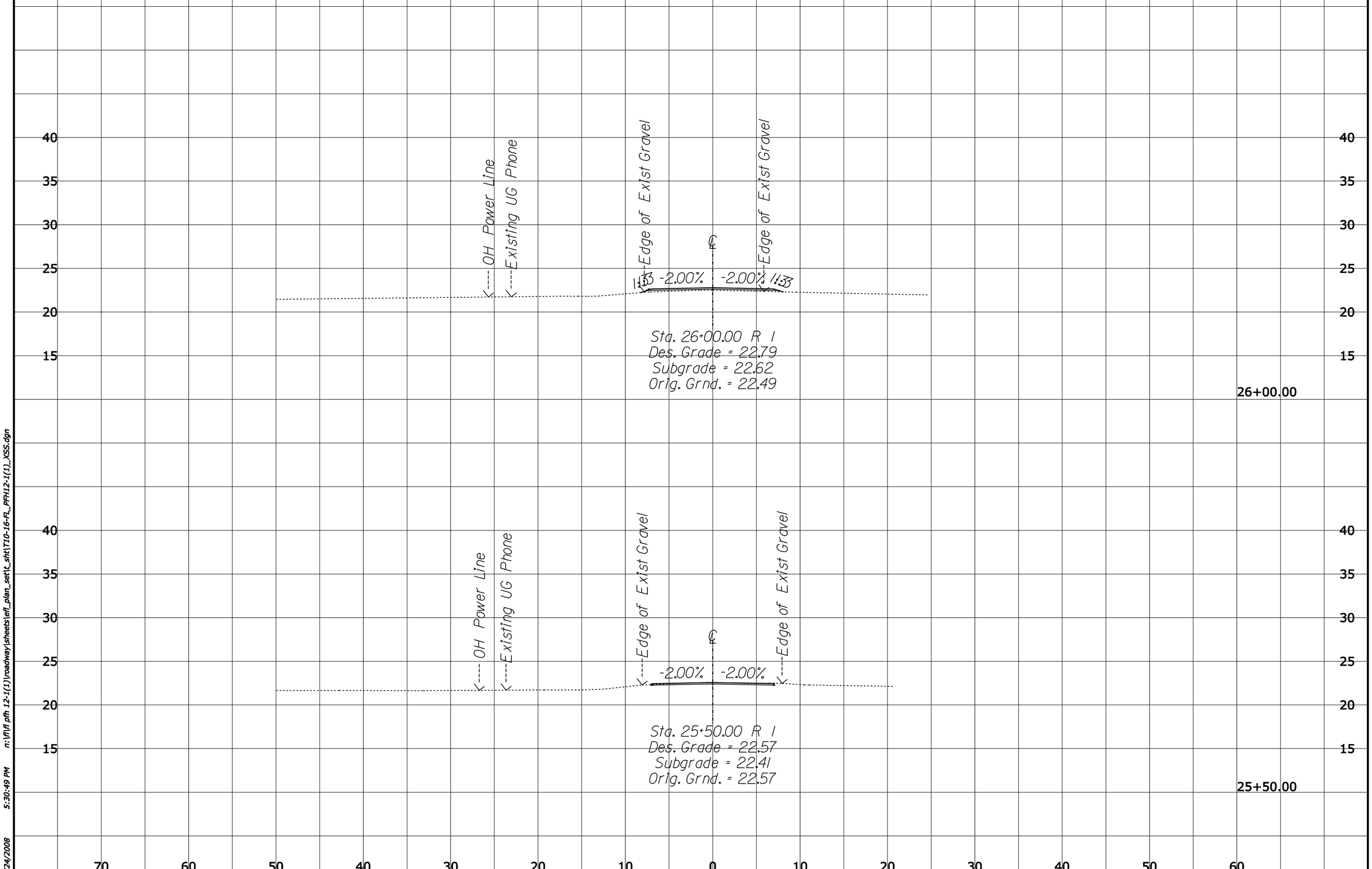

6/24/2008 5:30:49 PM n:\fl\fl pfh 12-1(1)\roadway\sheets\efl_plan_set\t_sht\T10-16-FL_PFH12-1(1)_XSS.dgn

REG	STATE	PROJECT	SHEET NO.
8	FL	FL PFH 12-1(1) River Styx Bridges	T11

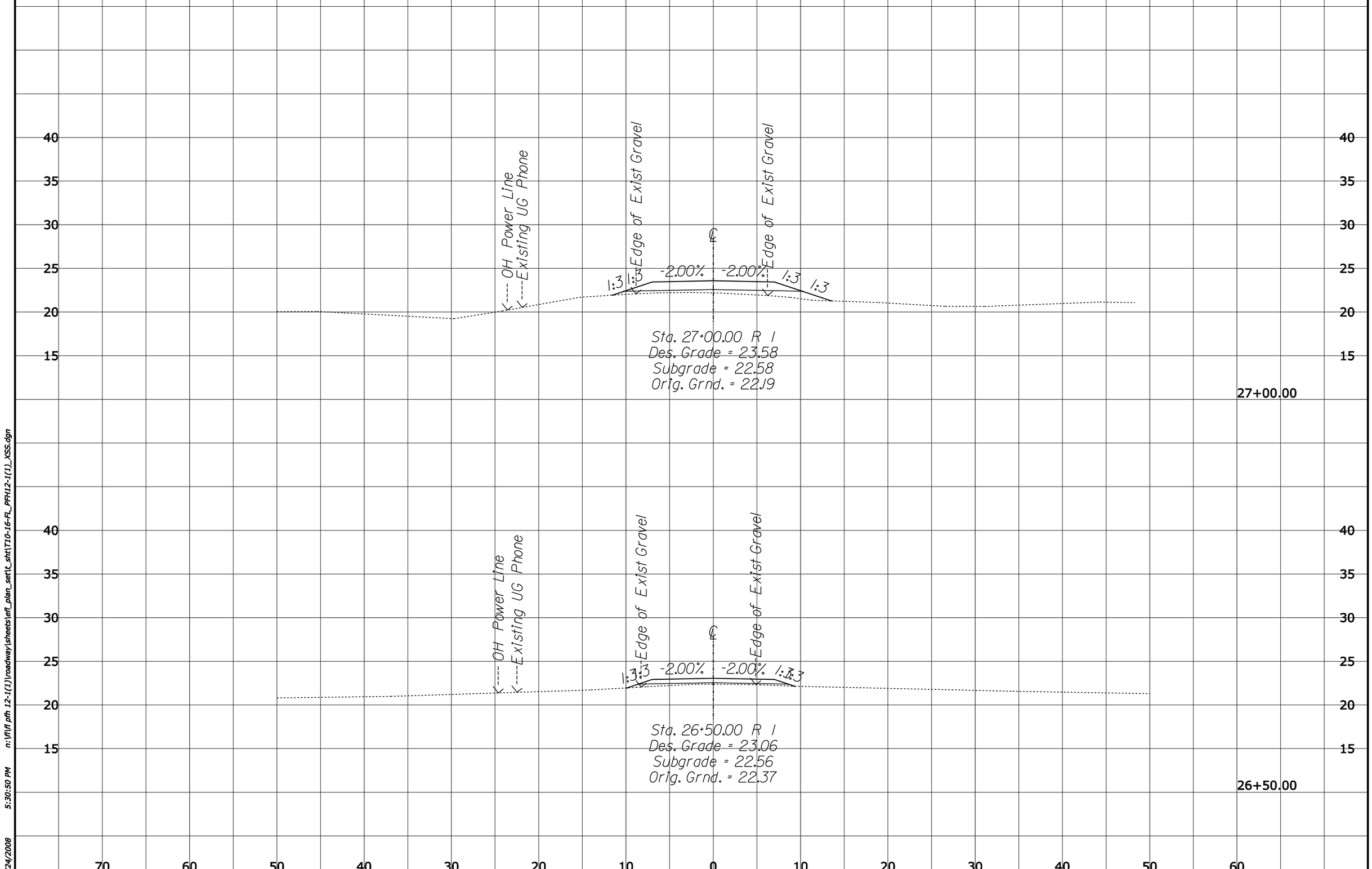

6/24/2008 5:30:50 PM n:\fl\fl pfh 12-1(1)\roadway\sheets\efl_plan_set\t_sht\T10-16-FL_PFH12-1(1)_XSS.dgn

REG	STATE	PROJECT	SHEET NO.
8	FL	FL PFH 12-1(1) River Styx Bridges	T12

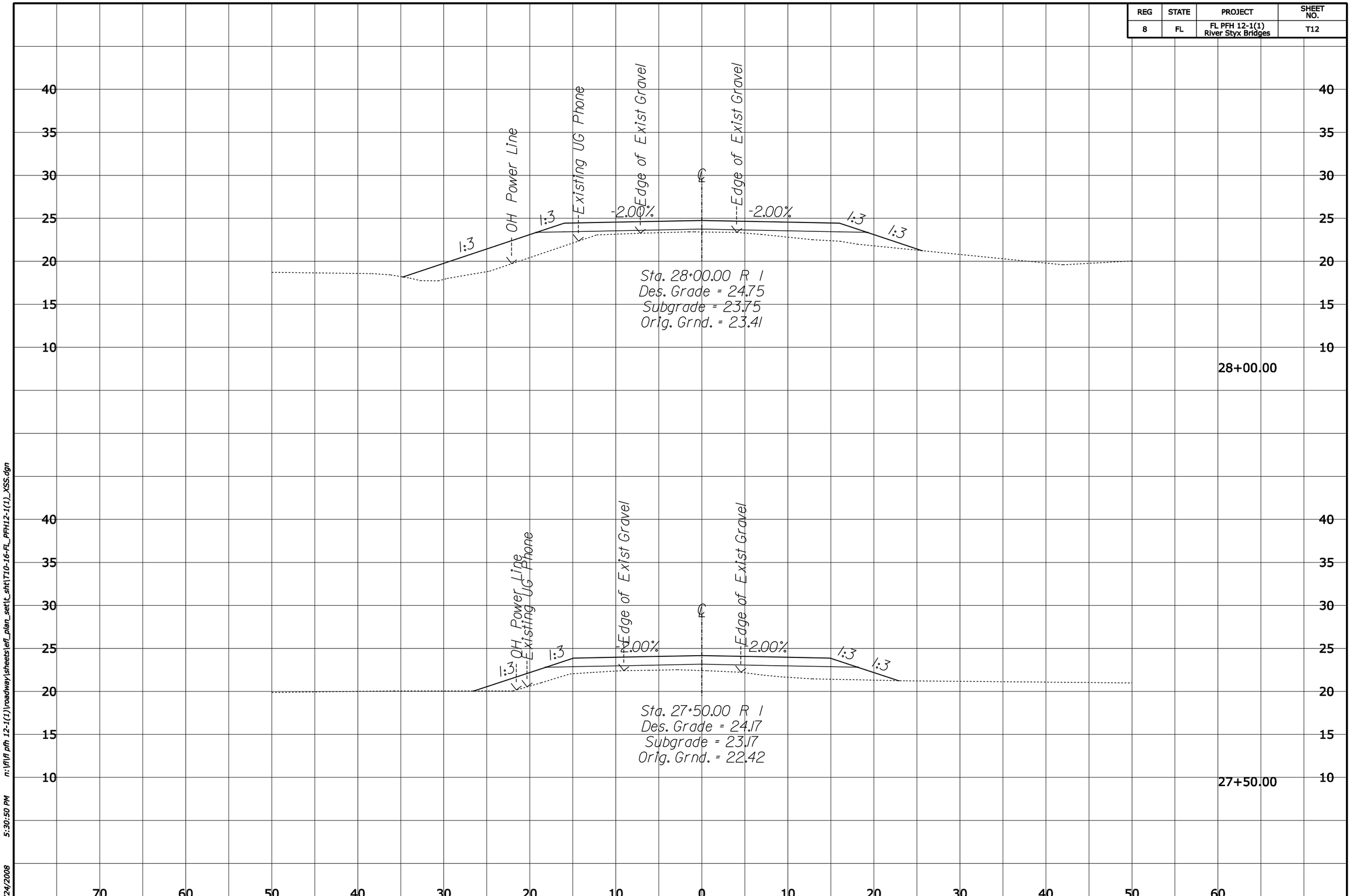

n:\fl\fl pfh 12-1(1)\roadway\sheets\efl_plan_set\t_sht\T10-16-FL_PFH12-1(1)_XSS.dgn
5:30:50 PM
6/24/2008

REG	STATE	PROJECT	SHEET NO.
8	FL	FL PFH 12-1(1) River Styx Bridges	T13

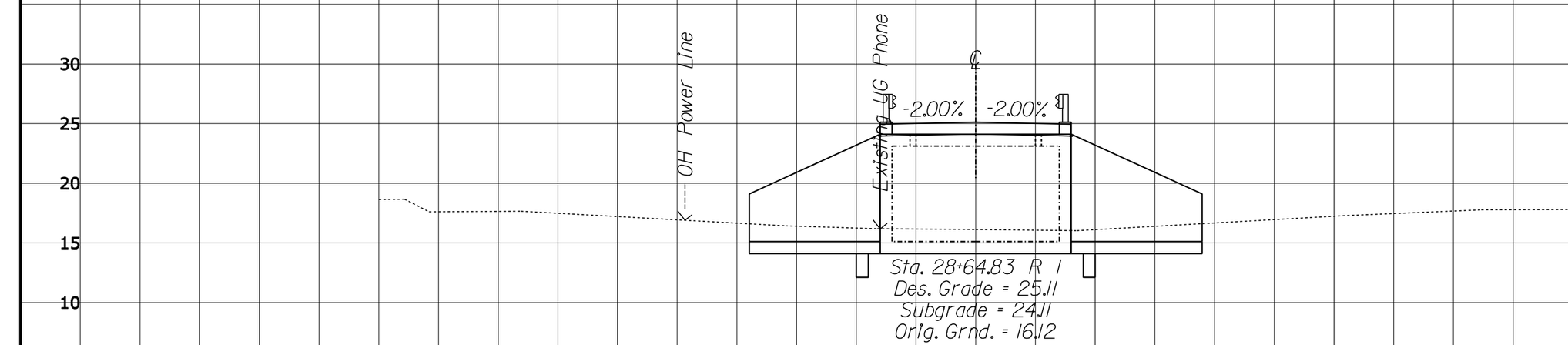

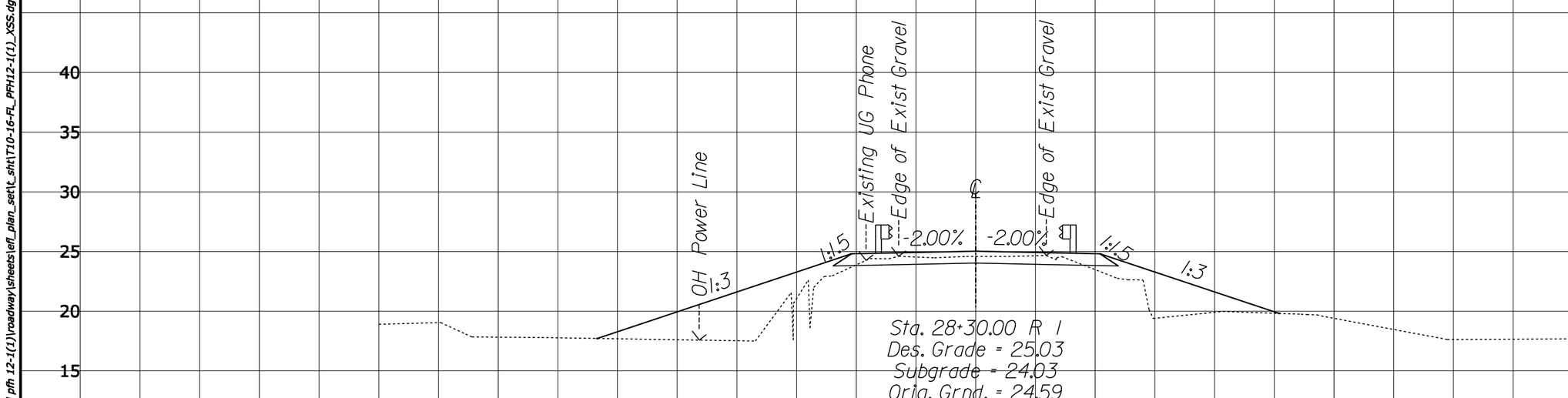

6/24/2008 5:30:50 PM n:\fl\fl pfh 12-1(1)\roadway\sheets\efl_plan_set\t_sht\T10-16-FL_PFH12-1(1)_XSS.dgn

REG	STATE	PROJECT	SHEET NO.
8	FL	FL PFH 12-1(1) River Styx Bridges	T14

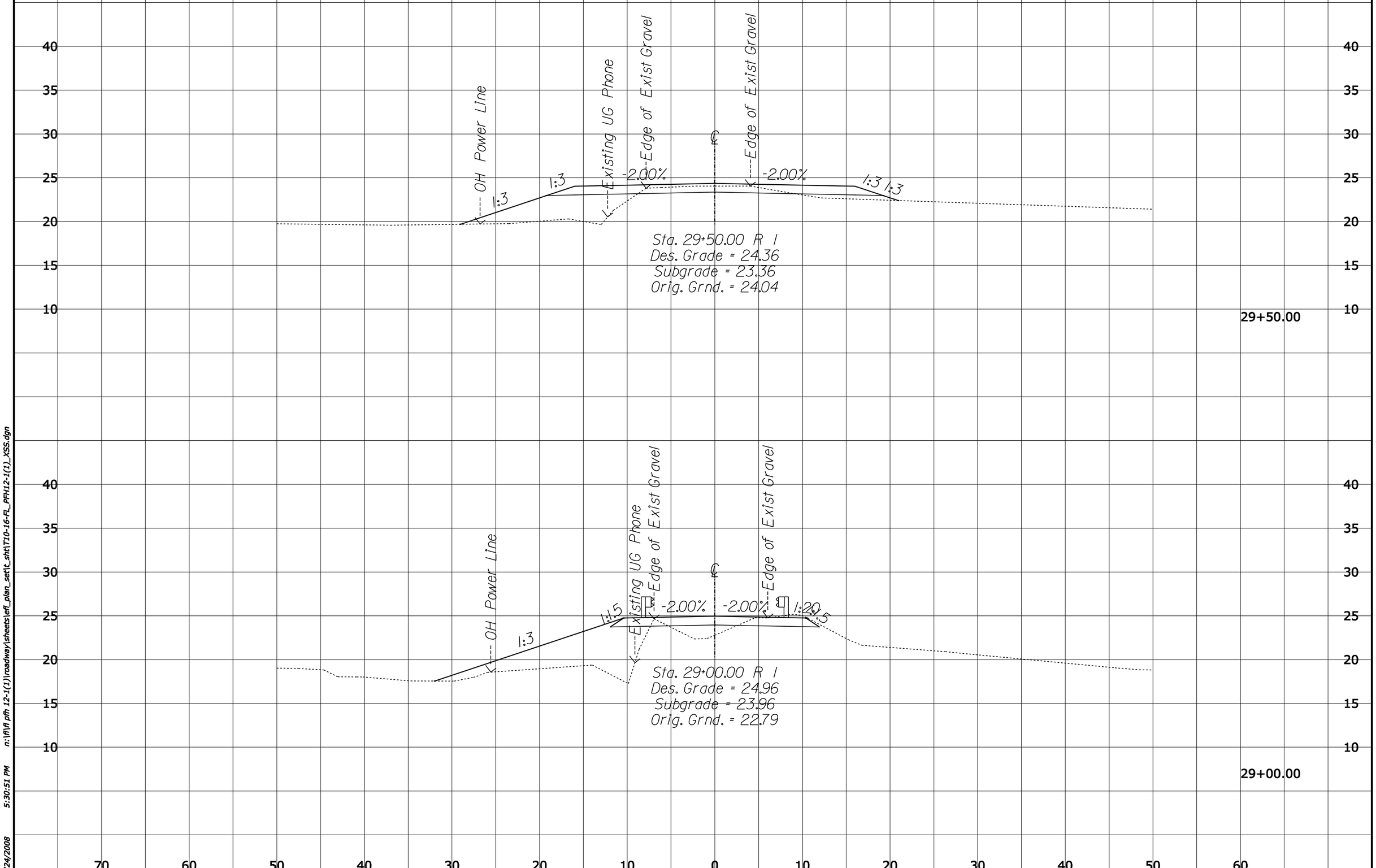

6/24/2008 5:30:51 PM n:\fl\fl pfh 12-1(1)\roadway\sheets\efl_plan_set\t_sht\T10-16-FL_PFH12-1(1)_XSS.dgn

REG	STATE	PROJECT	SHEET NO.
8	FL	FL PFH 12-1(1) River Styx Bridges	T15

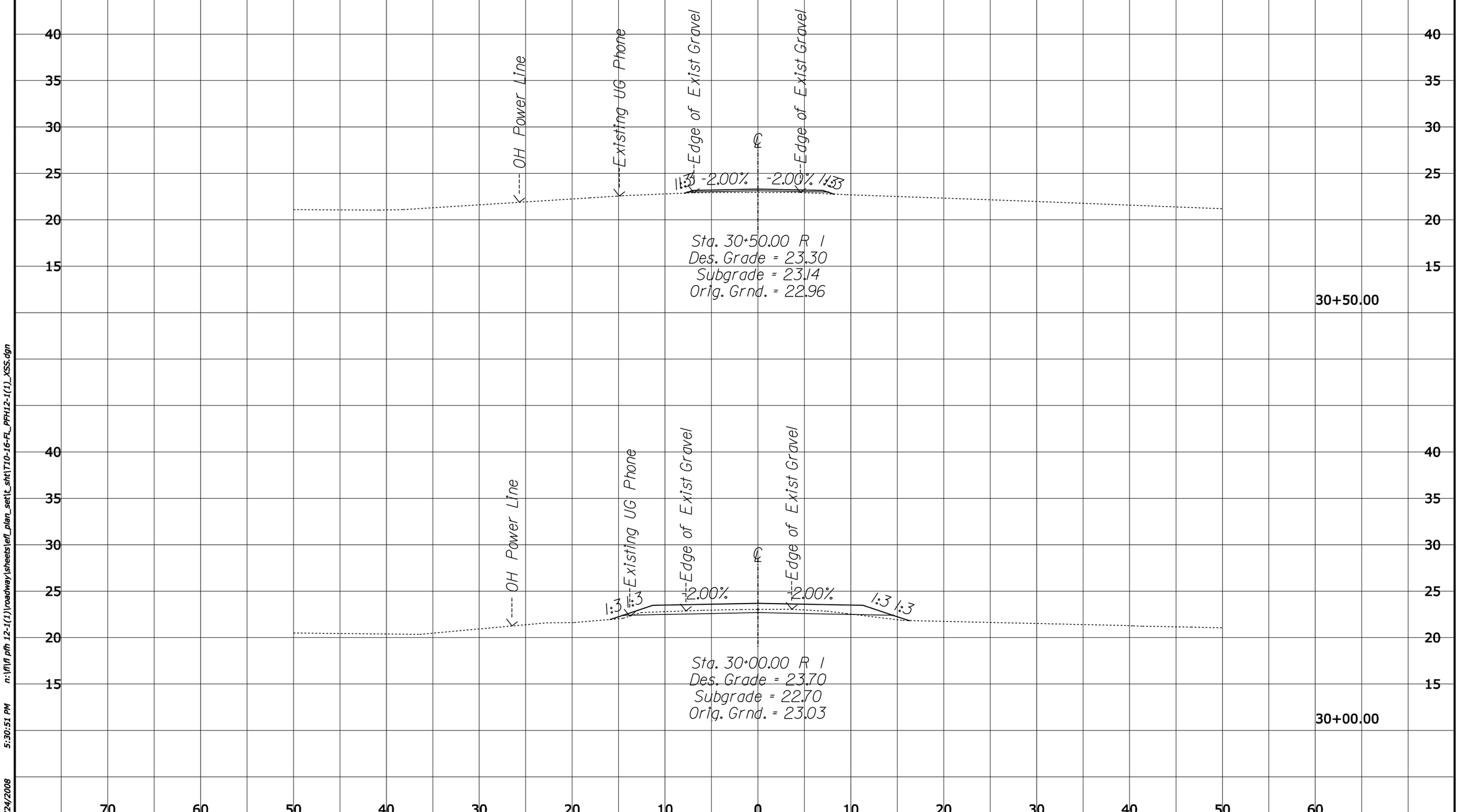

6/24/2008 5:30:51 PM n:\fl\fl pfh 12-1(1)\roadway\sheets\efl_plan_set\t_sht\T10-16-FL_PFH12-1(1)_XSS.dgn

REG	STATE	PROJECT	SHEET NO.
8	FL	FL PFH 12-1(1) River Styx Bridges	T16

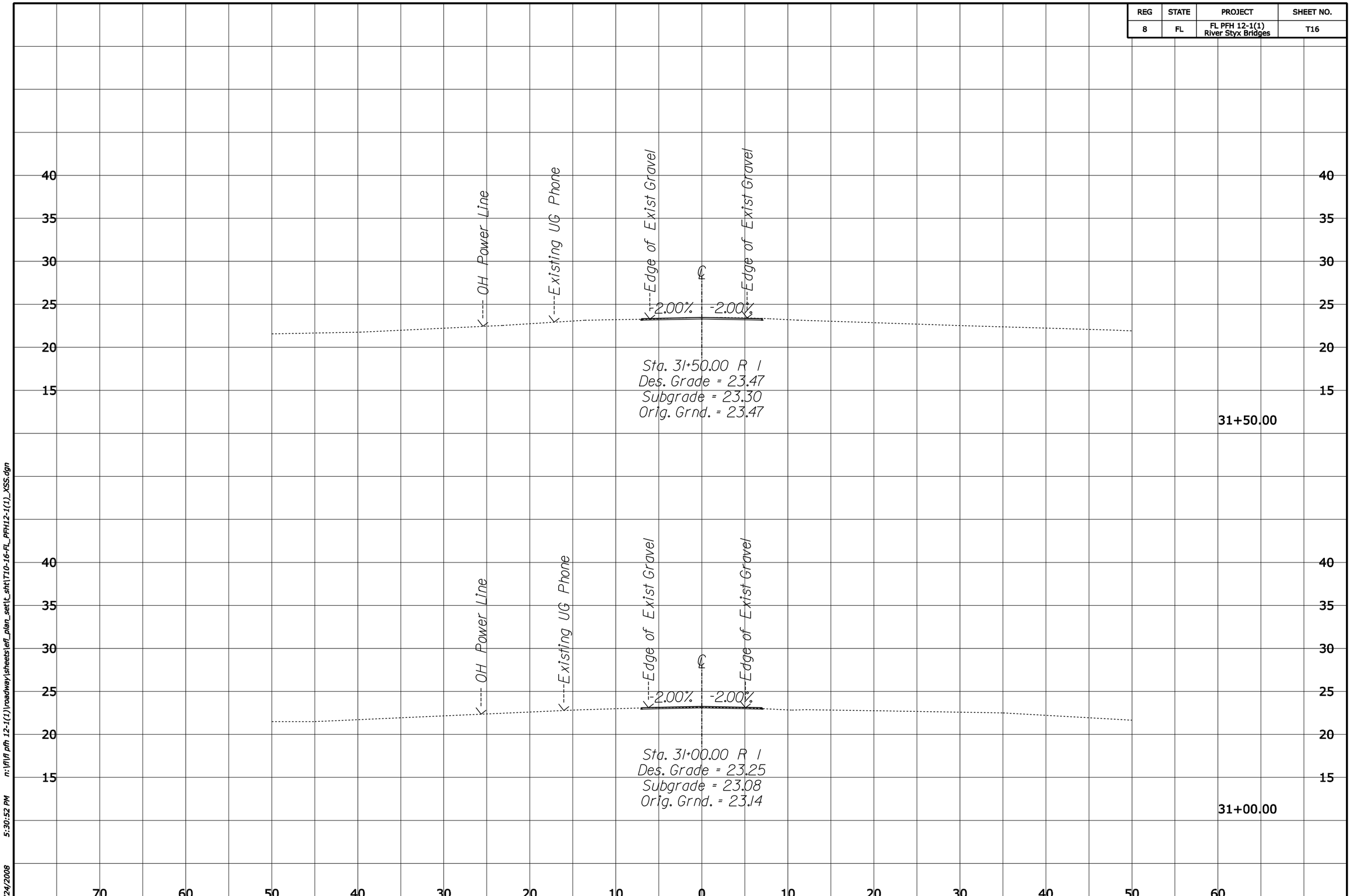

6/24/2008 5:30:52 PM n:\fl\fl pfh 12-1(1)\roadway\sheets\efl_plan_set\t_sht\T10-16-FL_PFH12-1(1)_XSS.dgn