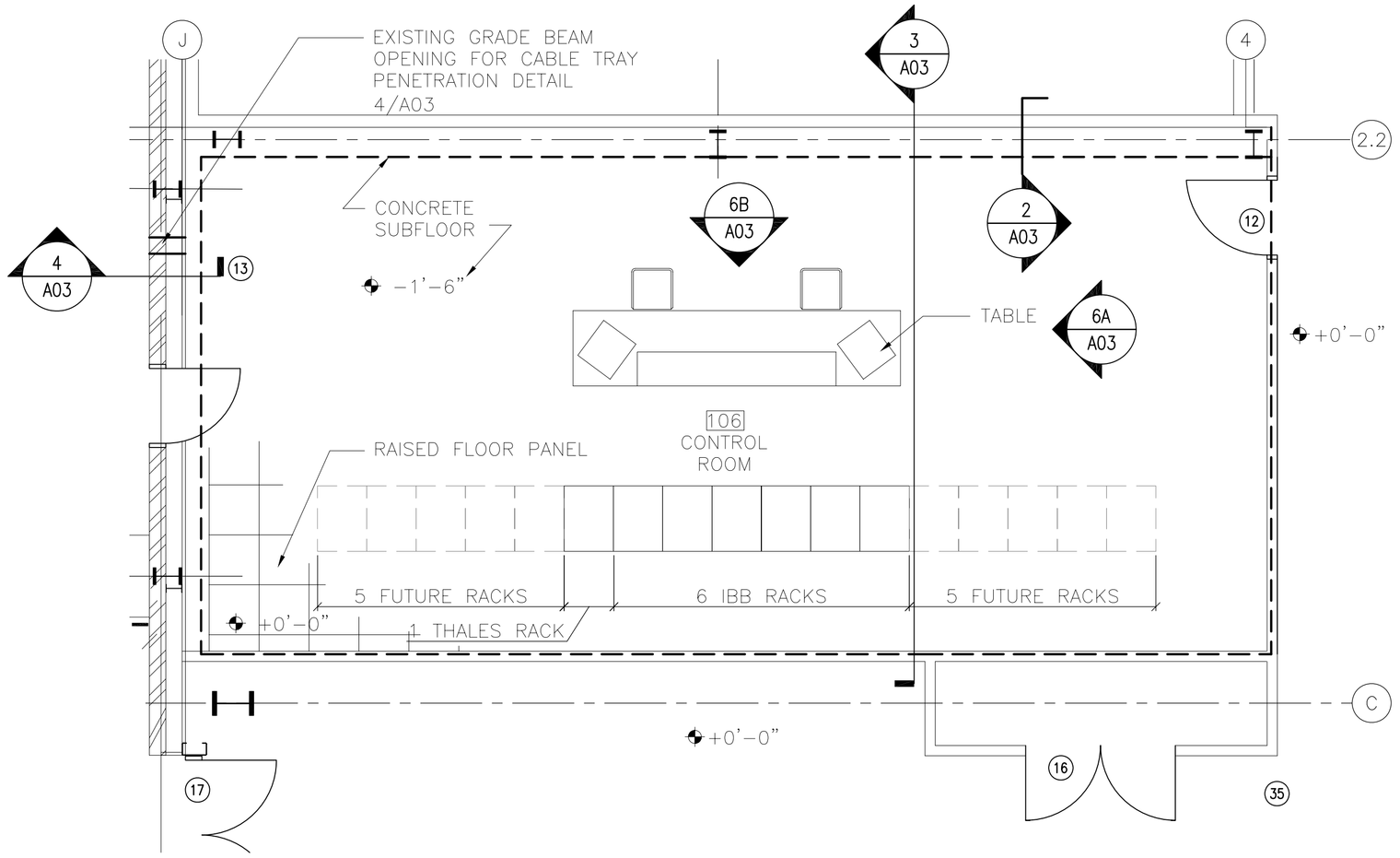

1 A03 FLOOR PLAN
1:50

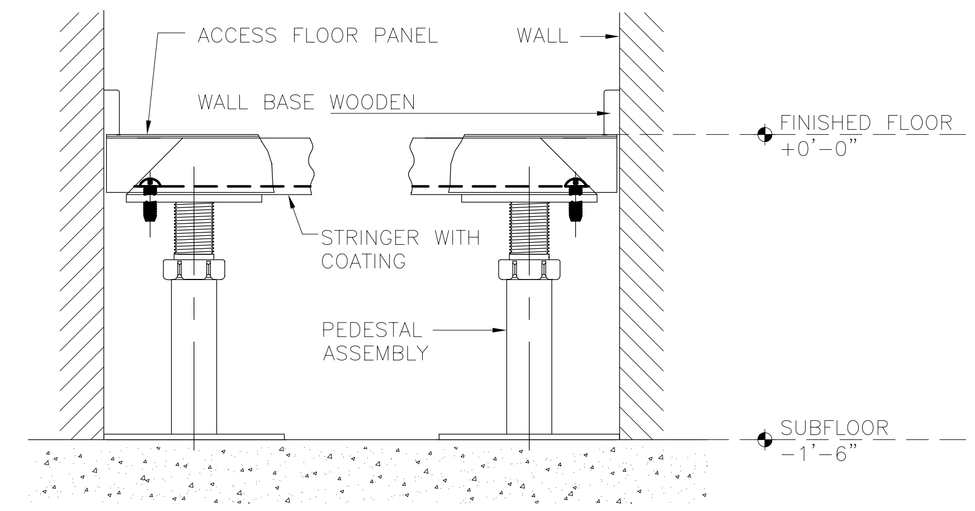

3 A03 RAISED FLOOR DETAIL
NTS

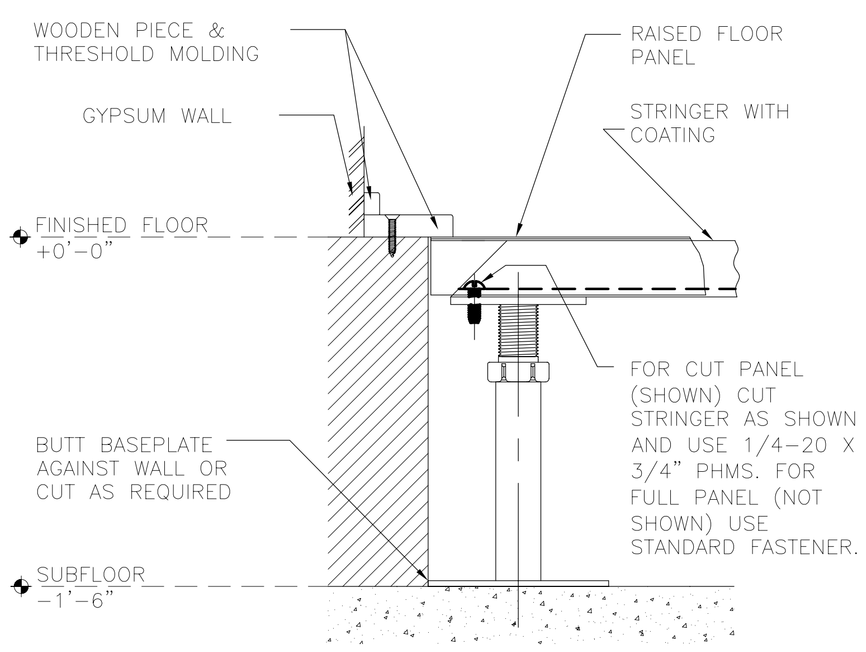

NOTE: REFER TO ELECTRICAL DRAWINGS FOR GROUNDING DETAILS

2 A03 RAISED FLOOR DETAIL (TYP)
NTS

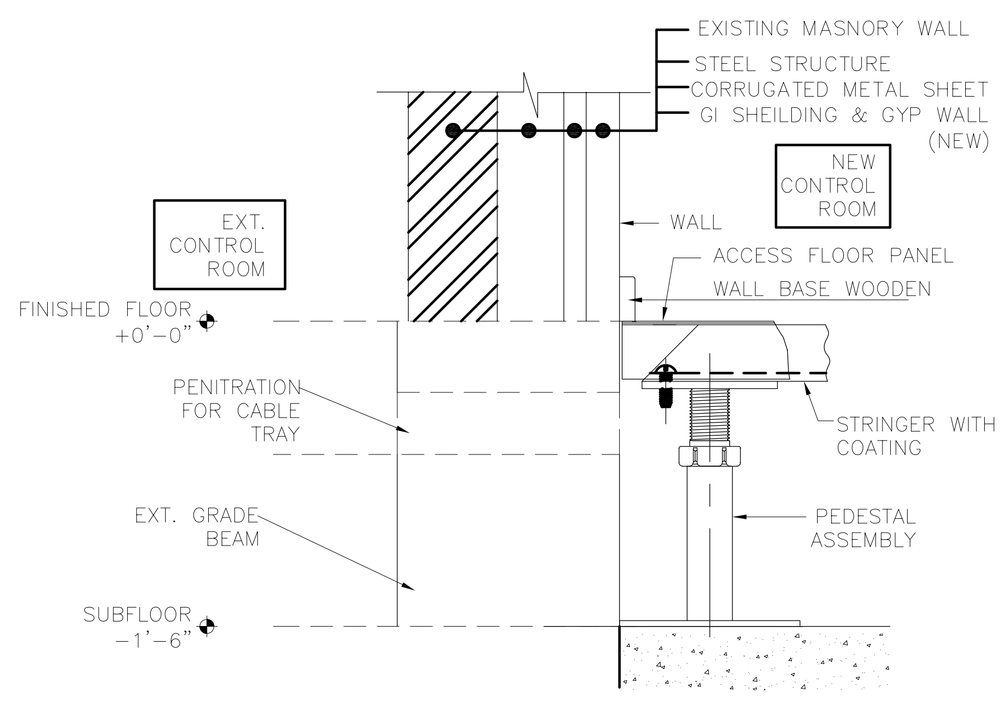

4 A03 GRADE BEAM OPENING (FOR CABLE TRAY)
NTS

LEGEND

2 A05	SECTION OR ELEVATION TAG
	NEW GYPSUM BOARD PARTITION, REFER TO PARTITION TYPES
	EXISTING WALLS TO BE DEMOLISHED
	GALV. SHEET STEEL WALL UNDERLAY SHIELDING IN CONTROL ROOM. REFER TO ELECTRICAL DRAWINGS.
100 ROOM	ROOM NAME AND NUMBER, REFER TO FINISH SCHEDULE

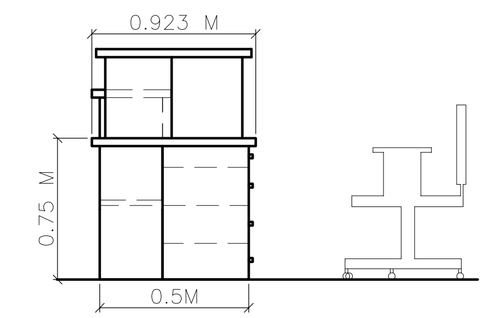

6A ELEVATION

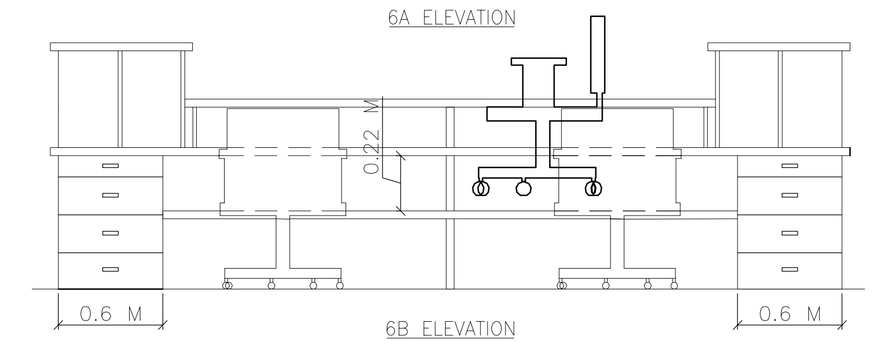

6B ELEVATION

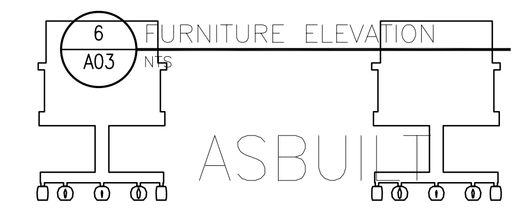

6 A03 FURNITURE ELEVATION
NTS

ASBUILT

GRAPHIC SCALE:
0 0.5m 1m 2.5m
SCALE: 1:50 (METRIC)
0 2ft 4ft 8ft
SCALE: .24":1' (ENGLISH)

SEAL:

REV	DESCRIPTIONS	DATE	APPD.

REVISION

INTERNATIONAL BROADCASTING BUREAU
ENGINEERING & TECHNICAL OPERATIONS
WASHINGTON, D.C. 20547

Bader AlMulla & Bros. Co. W.L.L
Engineering Group

		DATE
DRAWN	HAK	10/06/04
CHK. BY.	JPB	11/07/04
ENGR.	JPB	11/06/04

APPROVALS
PROJ. MANAGER TC

SHORTWAVE EXPANSION PROJECT
ENLARGED CONTROL ROOM
PLAN & DETAILS
KUWAIT

IQC No. XX-XX-XX
TASK No. X
PROJ. No. 03NC080

DWG. No. BMB-AS-A-03 A03
SCALE: AS SHOWN

• 30 Gatesl Drive, • Wayne, NJ 07470 • TEL: (973) 785-4545 • FAX: (973) 785-0786 • www.hansonengineers.com
HANSON
THALES
675 North Washington St., • Alexandria, VA. 22314 • TEL: (703) 838-5644 • FAX: (703) 838-3264 • www.thales-bm.com •

N