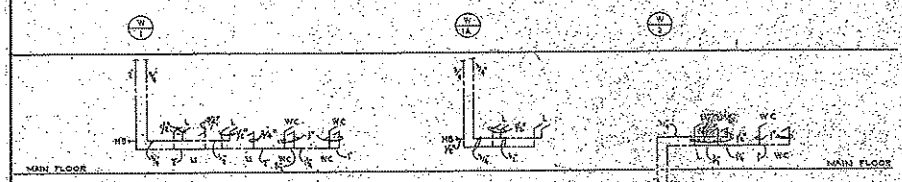

WATER RISER DIAGRAMS
NO SCALE

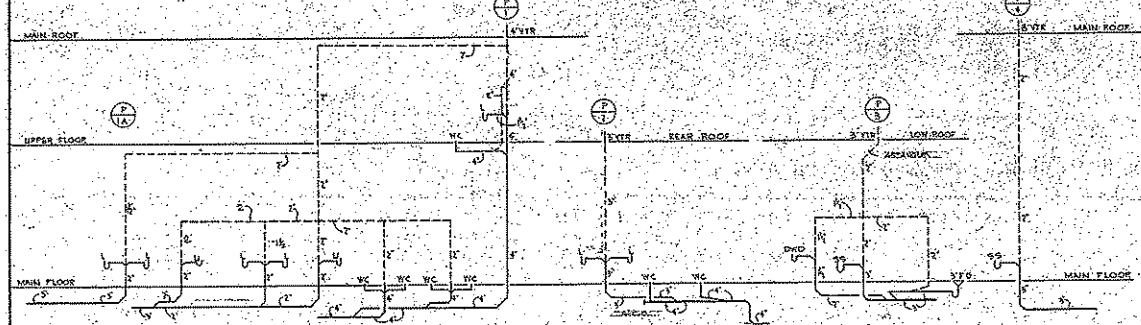

SANITARY RISER DIAGRAMS
NO SCALE

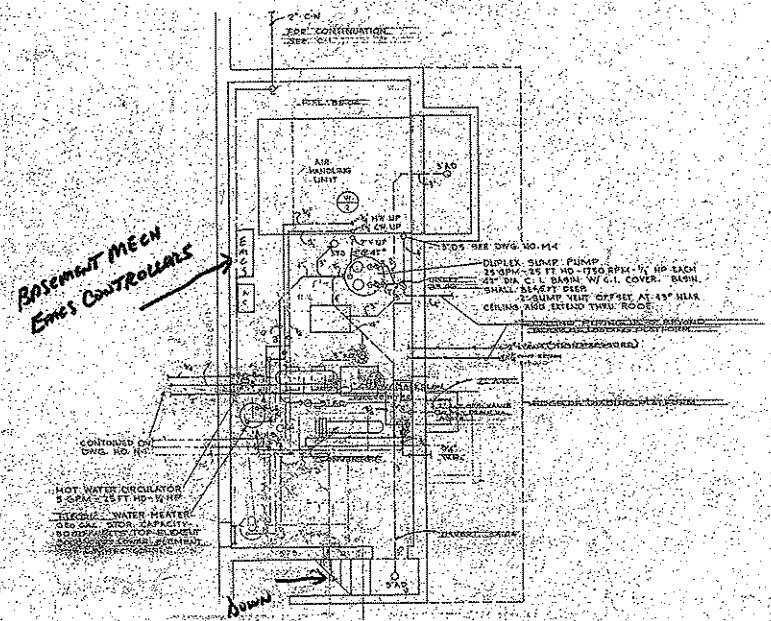

BASEMENT MECH
EMCS CONTROLLERS

BASEMENT PLAN
SCALE: 1/8"=1'-0"
BASEMENT ELEV.-11.58'

GRAPHIC SCALE
1/8"=1'-0"

FIXTURE CONNECTION SCHEDULE

	FIXTURE	SOIL OR WASTE	COLD WATER	HOT WATER
W.C.	WATER CLOSET	4"	1"	—
U	URINAL	2"	3/4"	—
S.S.	SERVICE SINK	3"	3/4"	3/4"
L	LAVATORY	1 1/4"	3/4"	3/4"
DWD	DRINKING WATER DISPENSER	1 1/4"	3/4"	—
H.B.	HOSE BIBB	—	3/4"	—
W.H.	WALL HYDRANT	—	3/4"	—
F.D.	FLOOR DRAIN	3"	—	—
A.D.	AREA DRAIN	3"	—	—
R.D.	ROOF DRAIN	3"	—	—

REV.	DATE	DESCRIPTION	BY
		APPROVED FOR THE SUPERVISOR OF THE ARMY FOR DOMESTIC AFFAIRS	
		APPROVED FOR THE SECRETARY OF THE AIR FORCE FOR DOMESTIC AFFAIRS	

ARMY & AIR FORCE MOTION PICTURE SERVICE
WASHINGTON, D. C.

DANIEL, MANN, JOHNSON, & MENDENHALL
WASHINGTON, D. C.
PLANNING • ARCHITECTURE • ENGINEERING • SYSTEMS

500 SEAT THEATER
FAIRCHILD AIR FORCE BASE WASHINGTON

PLUMBING, BASEMENT PLAN AND RISER DIAGRAMS

31-01-148

SCALE AS NOTED

M-2

APPROVED
ROBERT E. GOOD, CHIEF, A.F.M.P.S.

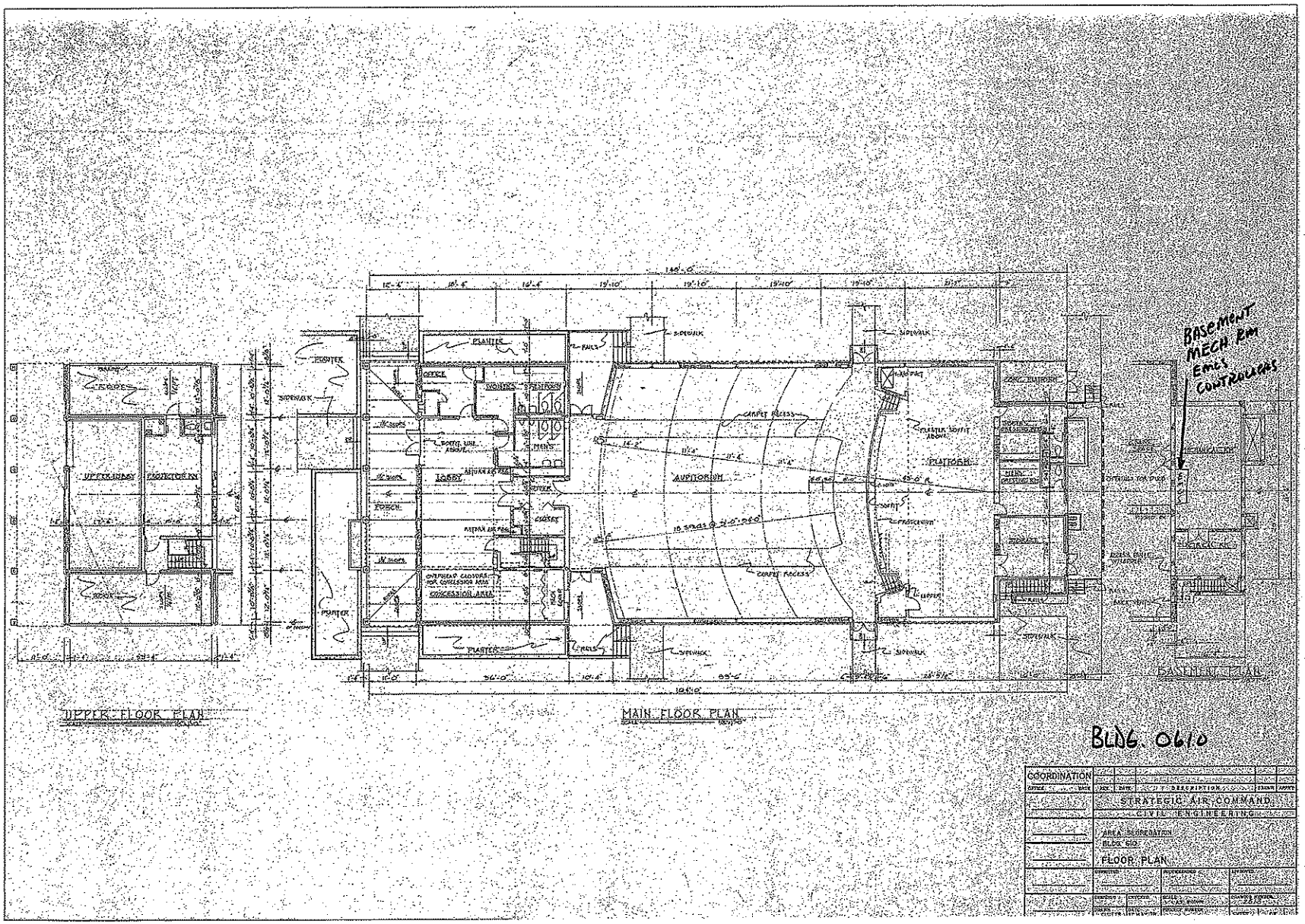
UPPER FLOOR PLAN
MAIN FLOOR PLAN
BASEMENT PLAN
BASEMENT MECH RM
EMCS CONTROLLERS
AUDITORIUM
LOBBY
OFFICE
PLANTER
SIDEWALK
PLATFORM
CARPET RECESS
CONCESSION AREA
BLDG. 0610
COORDINATION
STRATEGIC AIR COMMAND
CIVIL ENGINEERING
FLOOR PLAN

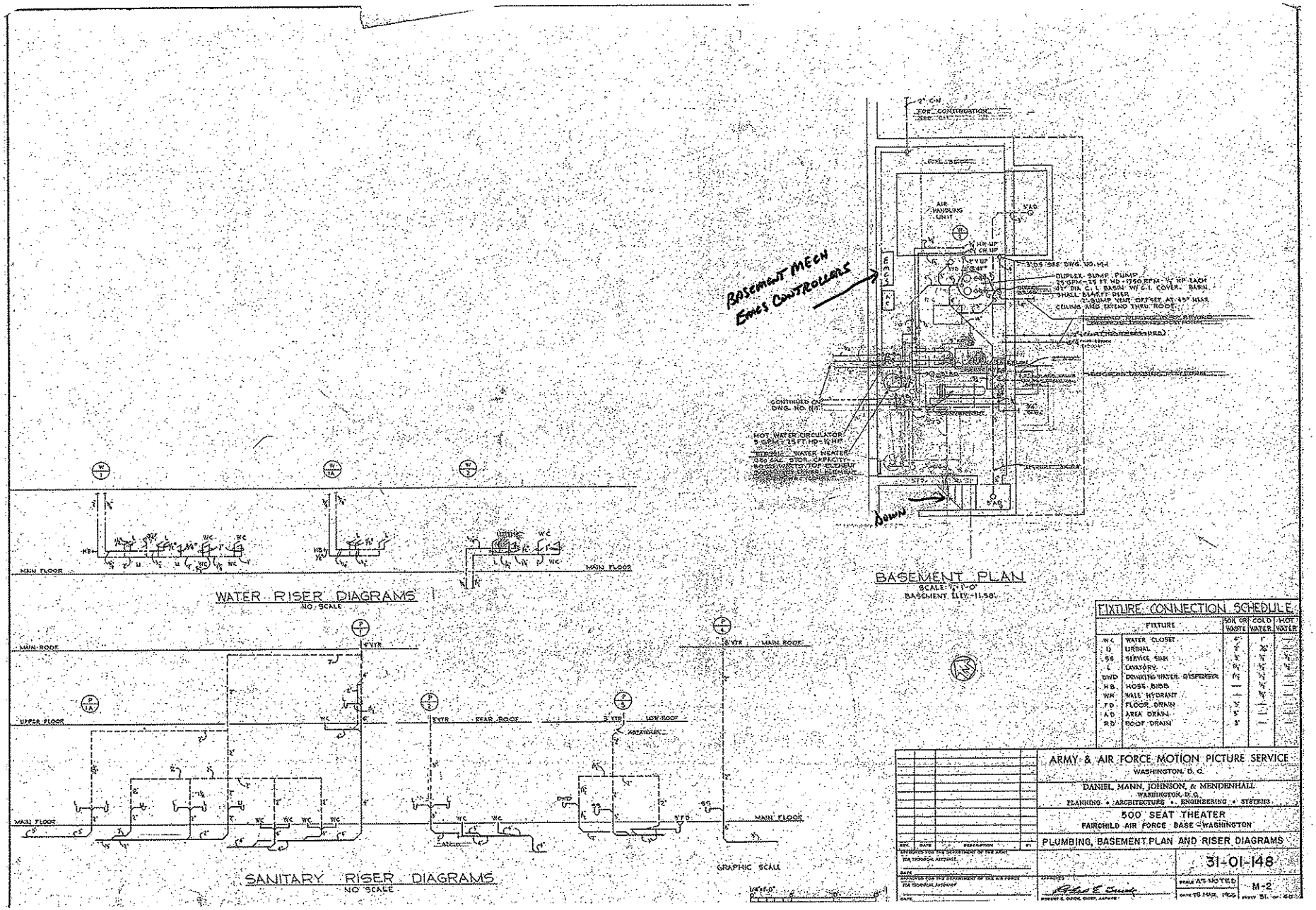

FIXTURE CONNECTION SCHEDULE

	FIXTURE	SOIL OR WASTE	COLD WATER	HOT WATER
WC	WATER CLOSET	4"	1"	—
U	URINAL	2"	3/4"	—
SS	SERVICE SINK	3"	1"	1"
L	LAVATORY	1½"	1/2"	1/2"
DWD	DRINKING WATER DISPENSER	1½"	1/2"	—
HB	HOSE BIBB	—	3/4"	—
WH	WALL HYDRANT	—	3/4"	—
FD	FLOOR DRAIN	4"	—	—
AD	AREA DRAIN	3"	—	—
RD	ROOF DRAIN	3"	—	—

REV.	DATE	REVISIONS	BY

APPROVED FOR THE DEPARTMENT OF THE ARMY FOR TECHNICAL ADVICE

DATE

APPROVED FOR THE DEPARTMENT OF THE AIR FORCE FOR TECHNICAL ADVICE

DATE

ARMY & AIR FORCE MOTION PICTURE SERVICE
WASHINGTON, D. C.

DANIEL, MANN, JOHNSON, & MENDENHALL
WASHINGTON, D. C.
PLANNING • ARCHITECTURE • ENGINEERING • SYSTEMS

500 SEAT THEATER
FAIRCHILD AIR FORCE BASE - WASHINGTON

PLUMBING, BASEMENT PLAN AND RISER DIAGRAMS

31-01-148

SCALE AS NOTED

DATE 19 MAR. 1966

M-2

SHEET 31 OF 52

AS-BUILT ROOM NUMBERS ARE INCORRECT
SEE BELOW FOR ROOM NUMBERS AT BUILDING

MEZZANINE MECH ROOM
CONTROLLERS 40, 50, 51 (AHU'S)

MECH ROOM

Room 166
Room 167
Room 168
Room 169
Room 170

OVERALL FACILITY PLAN
A2.01 SCALE: 3/32"=1'-0"
H:\PRJ\FAIRCHILD\F788\BLDG\H766A2D2

KEYED NOTES:

GENERAL NOTES:

C1 PROVIDE GUARDRAIL AT ALL OPEN EDGES OF ATTIC PLATFORM CONSISTING OF 4x5/8" FIRE RATED PLYWOOD. ATTACH TO STRUCTURE ABOVE AND BELOW. ALL COLD-FORMED METAL FRAMING WALLS SUPPORTING THE PLATFORM/CATWALK JOISTS, SHALL BE 20GA., AND BUILT IN ACCORDANCE WITH SPECIFICATION SECTION 05400, COLD-FORMED METAL FRAMING.

C2 PROVIDE AUTOMATIC CLOSING ACCESS PANEL THROUGH DRAFT STOP WALL. 2'-0" WIDE x 4'-0" HIGH. BOTTOM LOCATED 11'-2" ABOVE FINISH FLOOR. ALL EDGES TO BE WEATHER SEALED.

C3 PROVIDE FIRE RATED (TO MATCH WALL PENETRATED) AUTOMATIC CLOSING ACCESS PANEL THROUGH FIRE WALL 2'-0" WIDE x 4'-0" HIGH. BOTTOM OF DOOR 11'-2" ABOVE FINISH FLOOR. ALL EDGES TO BE WEATHER SEALED.

C4 IN ROOM 154 (FIRE EXT. MAINT./STOR.), PROVIDE 2-1/2" OD GALVANIZED PIPE, WITH TWO THREADED GALVANIZED CAPS, THROUGH EXTERIOR MASONRY WALL. LOCATE PASS-THROUGH PIPE AT 4' TO 5' ABOVE FLOOR, AND APPROXIMATELY 1' SOUTH OF EXTERIOR DOUBLE DOORS.

DISTANCE FROM DATUM
DIRECTION FROM DATUM
DATUM POINT

THE FIVE DIGIT NUMBER REPRESENTS THE DISTANCE IN FEET AND INCHES (ROUNDED TO THE NEAREST 1/2") FROM A PREDETERMINED DATUM POINT WHERE THE DATUM POINT IS DESIGNATED TO BE 000'-00"

THE LETTER N OR S REPRESENTS THE DIRECTIONS NORTH OR EAST OF THE DATUM POINT WHERE THE GRID LINE IS LOCATED.

EXAMPLE: 19504 N REPRESENTS 195'-4" NORTH OF THE DATUM POINT.

GRID LINE DEFINITION

LEGEND

- NEW FIRE PROTECTION THIS AREA
- ELECTRICAL WORK ONLY
- EXISTING TO REMAIN
- NEW WALLS
- NEW GLAZING
- INDICATES UPPER LEVEL MECHANICAL PLATFORMS

0 4' 8' 16' 32'
SCALE OF FULL SIZE PLOT: 3/32" = 1'-0"
IF SHEET MEASURES LESS THAN 28"x40" IT IS A REDUCED PRINT. REDUCE SCALE ACCORDINGLY

BLDG. 0003 FIRE STATION FLOOR PLAN

FRANKFURT SHORT BRUZA ASSOCIATES, P.C.
ARCHITECTS ENGINEERS PLANNERS
5801 N. BROADWAY, SUITE 500
OKLAHOMA CITY, OK 73118
PHONE (405) 840-2931
FAX (405) 842-7750

KEY PLAN
AREA "B"
AREA "A"

SYMBOL	DESCRIPTION	DATE	BY
	REVISED AS-BUILT	4/7/2009	

REVISIONS

FSB
U.S. ARMY ENGINEER DISTRICT, SEATTLE
CORPS OF ENGINEERS
SEATTLE, WASHINGTON

ADD / ALTER FIRE STATION

OVERALL FACILITY PLAN

FAIRCHILD AIR FORCE BASE — PN GMCE850021 — NA

REV	DRAWING NO.	FILE NO.	DATE	SHEET
F		236e/730-90-03	93 MAY 15	A2.01

DRN P. MORGAN — CHK MARCISZEWSKI — SHEET 42

AS-BUILT

NOTE: ACCU1 IS BEING RELOCATED. EXTEND EXISITING WIRE AND CONDUIT.

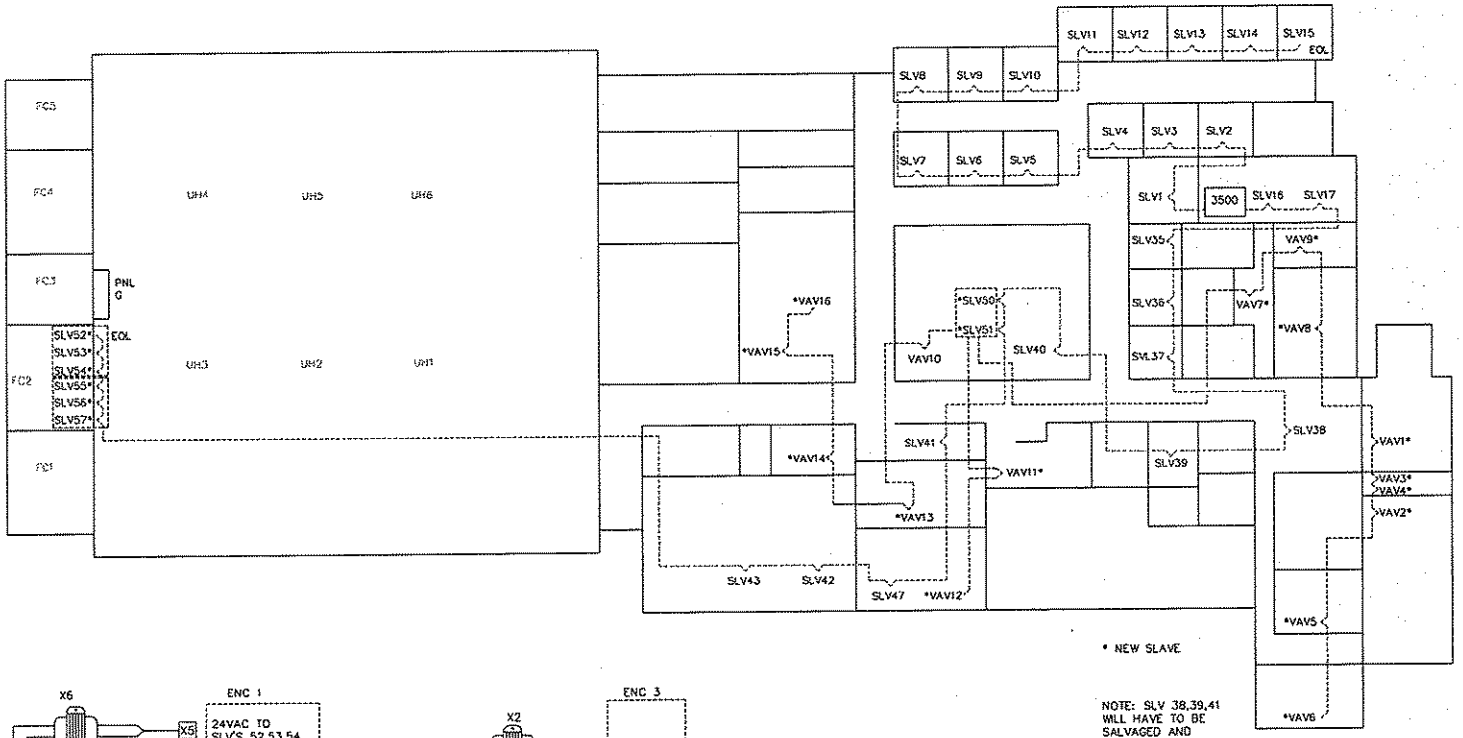

* NEW SLAVE

NOTE: SLV 38,39,41 WILL HAVE TO BE SALVAGED AND REUSED

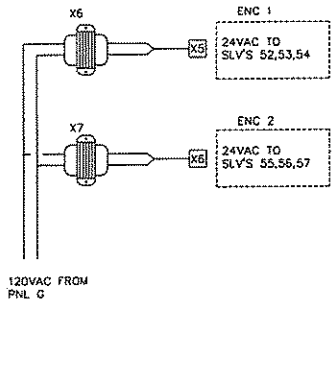

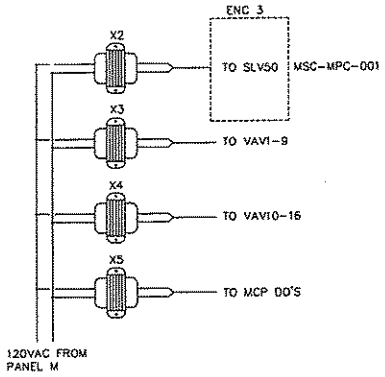

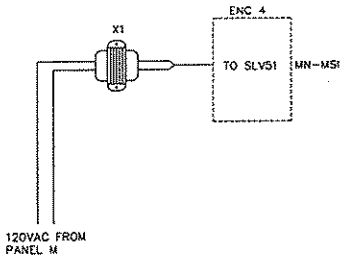

REV. 1 ADD MODULES TO B.O.M. 2-19-99

BILL OF MATERIALS

ID	MODEL NUMBER	DESCRIPTION	QTY
X1,2	AT150F 1022	120VAC/24VAC 50VA TRANSFORMER	2
X3,4,5	AT175F 1023	120VAC/24VAC 75VA TRANSFORMER	3
X6,7	AT175F 1023	120VAC/24VAC 75VA TRANSFORMER	2
ENC1-3	E-24N20B	ENCLOSURE	3
	E-24P20		3
SLV50	MSC-MPC-001	CONTROLLER	1
	MPC-4CO	MODULE	2
	MPC-4AO	MODULE	1
SLV51	MN-MSI	CONTROLLER	1
VAV1-16	MN-FLOST	VAV CONTROLLER	16
SLV52	MSC-P1502	CONTROLLER	1
SLV53-57	MSC-P1501	CONTROLLER	5
ENC4	12164SC	NEMA 1 ENCLOSURE	1

REVISIONS

RECORD DRAWING DATE: 3-30-99 BY: R.K.

SIEBE ENVIRONMENTAL CONTROLS

SIEBE ENVIRONMENTAL CONTROLS
7222 E. NORA
SPOKANE, WA. 99212

DESCRIPTION

TRUNK AND POWER LAYOUT

JOB NAME	ADD/ALTER FIRE STATION
LOCATION	BLDG. 3 FAIRCHILD AIR FORCE BASE
ARCHITECT	FRANK SHORT BRUZA
ENGINEER	ARMY CORPS OF ENGINEERS
CONTRACTOR	C & R PLUMBING
ENGR'D BY	D. DARLING
DRAWN BY	R.K.
PROJECT NO.	965-99027-34

DRAWING NO. 99027-1

DATE 1-27-99 SHEET 1 OF 7

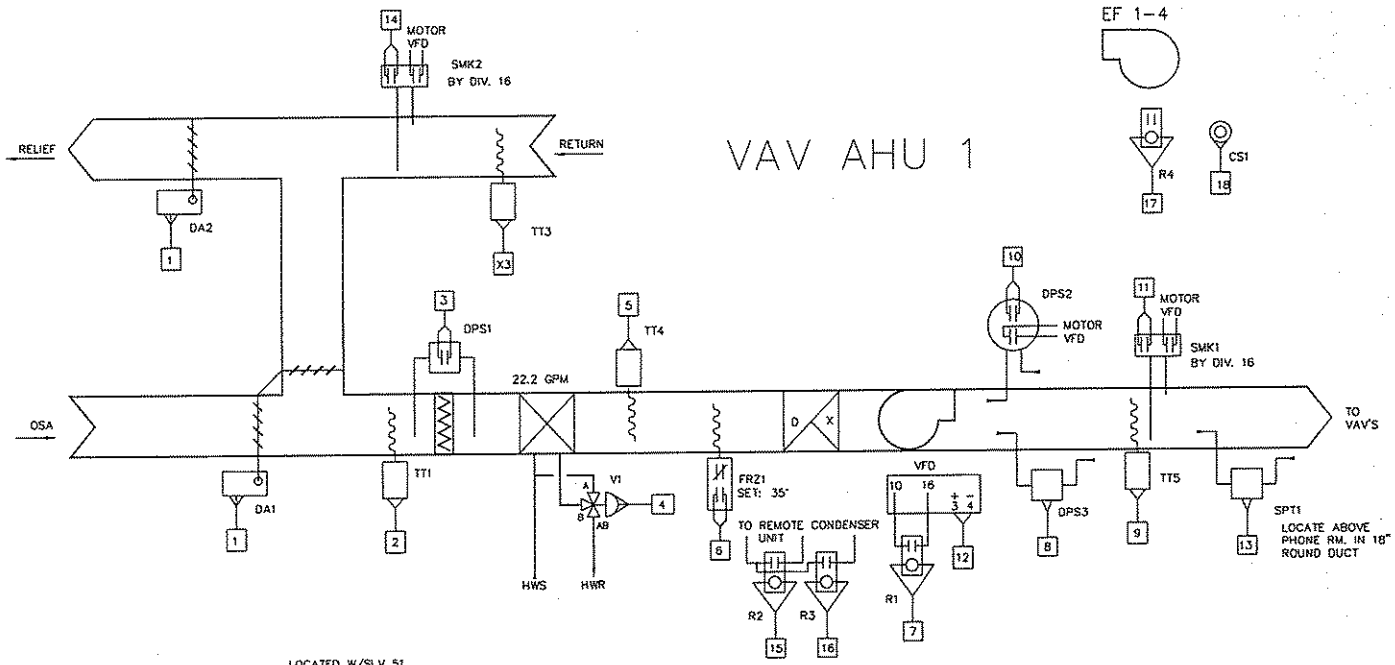

Sequence of operation AHU 1

This unit operates 24 hours a day seven days a week.

Occupied mode: The supply will be on continuously. The supply fan variable frequency drive signal will modulate to maintain .75" wc (or as set). A high static pressure switch will stop the fan if 3.0" wc is sensed (or as set), this device will have to be manually reset if tripped. The preheat coil valve will modulate to maintain 51 degree leaving coil temperature. The stages of d/x will be energized above 55 degree outside air temperature to maintain 51 degree supply air temperature. When the return air temperature is above 68 degrees and the outside air temperature is 3 degrees less than the return air temperature the economizer dampers will modulate to maintain 52 degrees mixed air temperature. When the return air is less than 68 degrees the dampers will be positioned to minimum.

A low limit thermostat will stop the fan, position the dampers to full recirculation and generate an alarm at the building automation system if 35 degrees is sensed at the leaving side of the preheat coil.
A differential pressure switch across the filter will indicate a dirty filter at 1" wc (or as set).
Smoke detectors in the supply and return air ducts will stop the supply fan and position the dampers to full recirculation if either detector senses smoke.

99027-5.doc

BILL OF MATERIALS

ID	MODEL NUMBER	DESCRIPTION	QTY
OA1,2	MS-7203	DAMPER ACTUATOR	2
TT*	TS-8405	TEMPERATURE SENSOR	4
DPS1,3	R436	DIFF. PRESSURE SW.	2
V1		SEE VALVE SCHEDULE	
FRZ1	T322	FREEZE STAT	1
DPS2	3004 W/A-601	PRESSURE SWITCH	1
SPT1	PP-2446	STATIC PRESSURE TRANSMITTER	1
R1-3	8899/SH29	RELAY & BASE	3
R4	RB-01C	RELAY	4
CS1	E112-800	CURRENT SWITCH	4

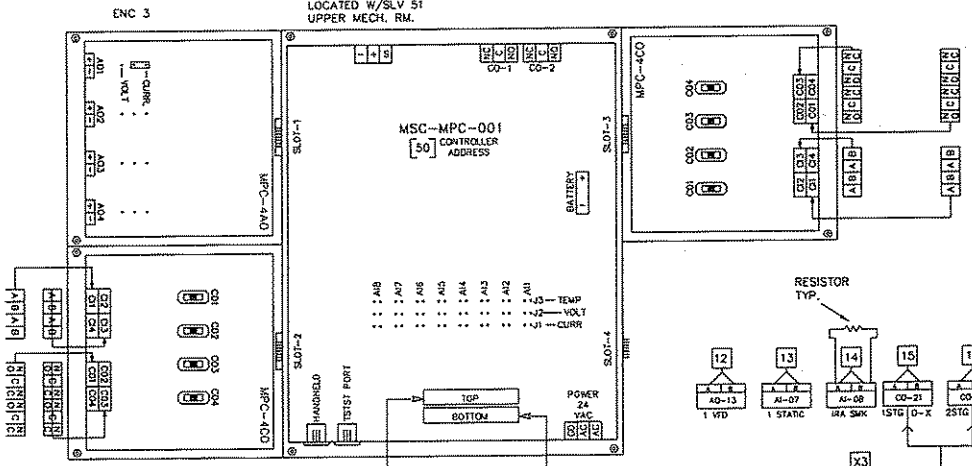

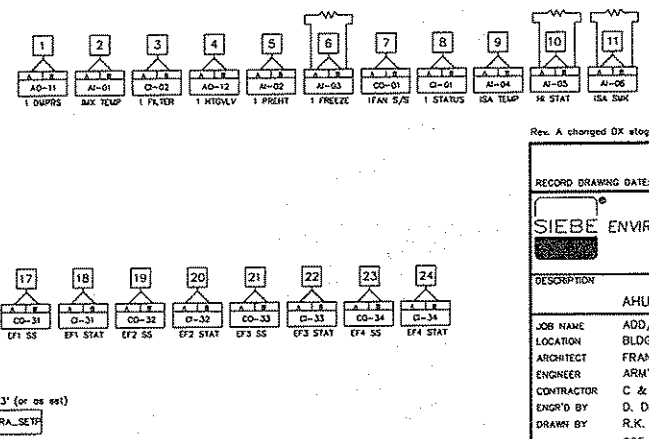

Rev. A changed DX staging 2AUG01 P.Z.

REVISIONS

RECORD DRAWING DATE: 3-31-99 BY: R.K.

SIEBE ENVIRONMENTAL CONTROLS

SIEBE ENVIROMENTAL CONTROLS
7222 E. NORA
SPOKANE, WA. 99212

DESCRIPTION: AHU-1

JOB NAME	ADD/ALTER FIRE STATION
LOCATION	BLDG. 3 FAIRCHILD AIR FORCE BASE
ARCHITECT	FRANK SHORT BRUZA
ENGINEER	ARMY CORPS OF ENGINEERS
CONTRACTOR	C & R PLUMBING
ENGR'D BY	D. DARLING
DRAWN BY	R.K.
PROJECT NO.	985-99027-34

DRAWING NO. 99027-2 0003C2

DATE 1-27-99 SHEET 2 OF 7

SEE SHEET 1 FOR TRUNK AND POWER

REV. 1 ADD EF CONTROL 2-19-99

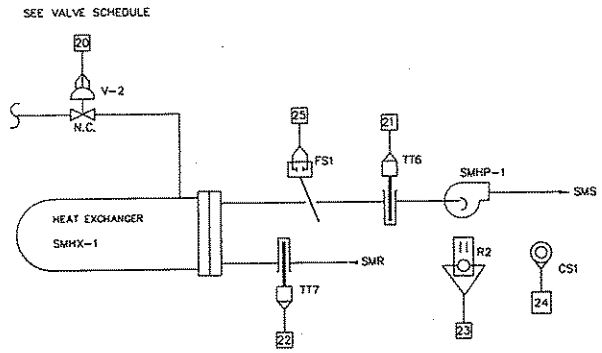

Sequence of operation Snow Melt System:

When the outside air temperature is less than 35 degrees (or as set), the snow melt heating water pump SMHP1 will be enabled. The hot water heating valve will modulate to maintain the 115 degree supply water to the snow melt piping.

The snow melt pump will be stopped when the outside air temperature rises above 40 degrees (or as set). The snow melt pump will stop if the supply water temperature rises above 115 degrees.

99027-2.doc

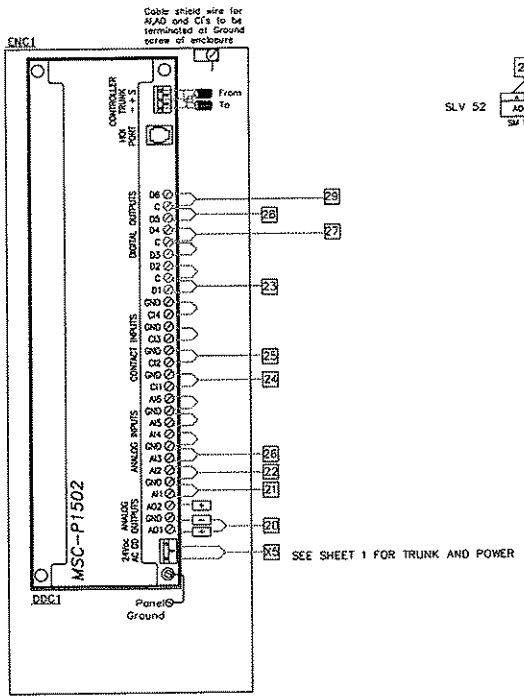

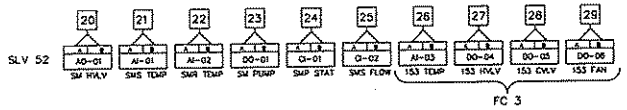

BILL OF MATERIALS

ID	MODEL NUMBER	DESCRIPTION	QTY
TT6,7	15-8201-106	TEMPERATURE SENSOR	2
	AT-225	WELL	2
FS1	E-201-4	FLOW SWITCH	1
R2	R8-UIC	RELAY,BASE	1
CS1	E112-800	CURRENT SENSOR	1

REVISIONS

RECORD DRAWING DATE: BY:

SIEBE ENVIRONMENTAL CONTROLS

SIEBE ENVIRONMENTAL CONTROLS
7222 E. NORA
SPOKANE, WA. 99212

DESCRIPTION

SNOW MELT SYSTEM

JOB NAME	ADD/ALTER FIRE STATION
LOCATION	BLDG. 3 FAIRCHILD AIR FORCE BASE
ARCHITECT	FRANK SHORT BRUZA
ENGINEER	ARMY CORPS OF ENGINEERS
CONTRACTOR	C & R PLUMBING
ENGR'D BY	D. DARLING
DRAWN BY	R.K.
PROJECT NO.	965-99027-34

DRAWING NO. 99027-4

DATE 1-27-99 SHEET 4 OF 7

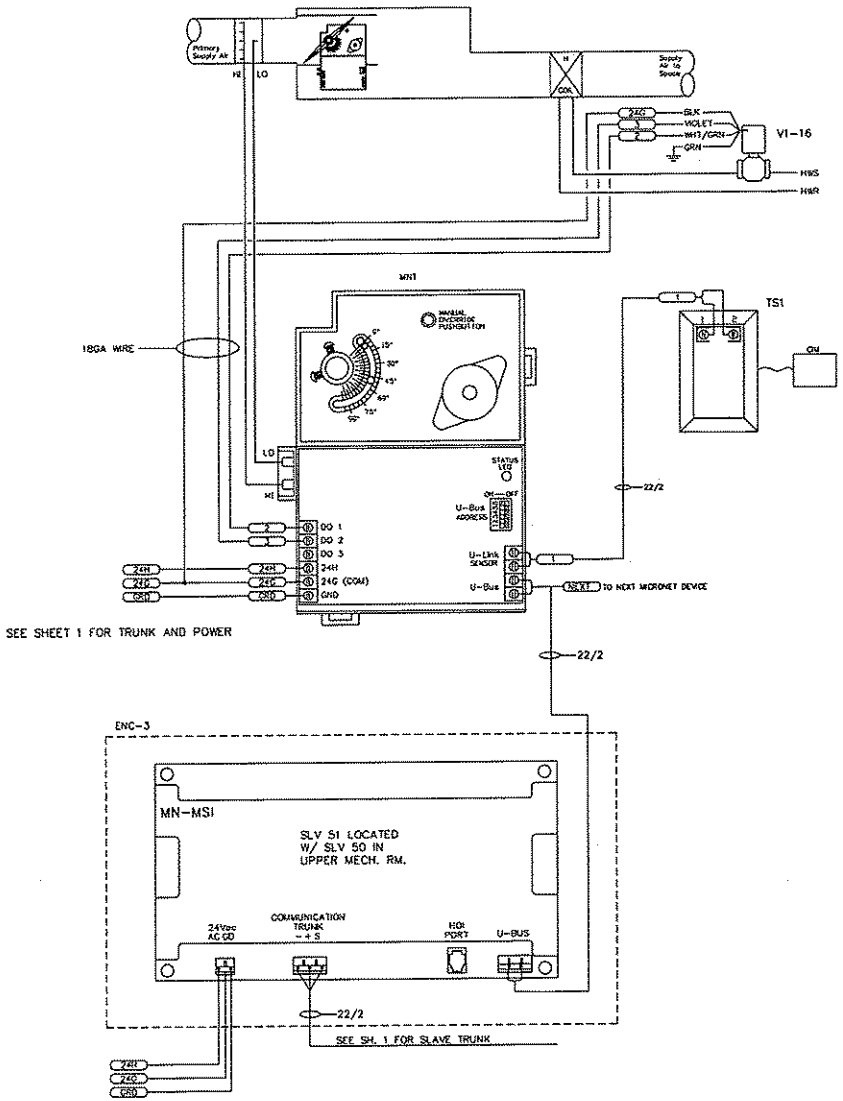

Sequence of operation Terminal Variable Air Volume Boxes:

When the space temperature is below setpoint the vav box damper will modulate to minimum air flow and the heating valve will open to the coil. As space temperature rises to heating setpoint the valve will close, a further rise in space temperature the vav box damper will modulate to maximum air flow to maintain cooling setpoint.

99027-6.doc

BILL OF MATERIALS

ID	MODEL NUMBER	DESCRIPTION	QTY
MN1	MN-FL03T	VAV CONTROLLER	16
TS1	MN-S	TEMPERATURE SENSOR	16
V1-16		SEE VALVE SCHEDULE	

REVISIONS

RECORD DRAWING DATE: 3-30-99 BY: R.K.

SIEBE ENVIRONMENTAL CONTROLS

SIEBE ENVIROMENTAL CONTROLS
7222 E. NORA AVE
SPOKANE, WA. 99212

DESCRIPTION

VAV BOXES

JOB NAME	ADD/ALTER FIRE STATION
LOCATION	BLDG. 3 FAIRCHILD AIR FORCE BASE
ARCHITECT	FRANK SHORT BRUZA
ENGINEER	ARMY CORPS OF ENGINEERS
CONTRACTOR	C & R PLUMBING
ENGR'D BY	D. DARLING
DRAWN BY	R.K.
PROJECT NO.	965-99027-34

DRAWING NO. 99027-3

DATE 1-27-99 SHEET 3 OF 7

AHU 1/2 (LOCKER ROOMS)

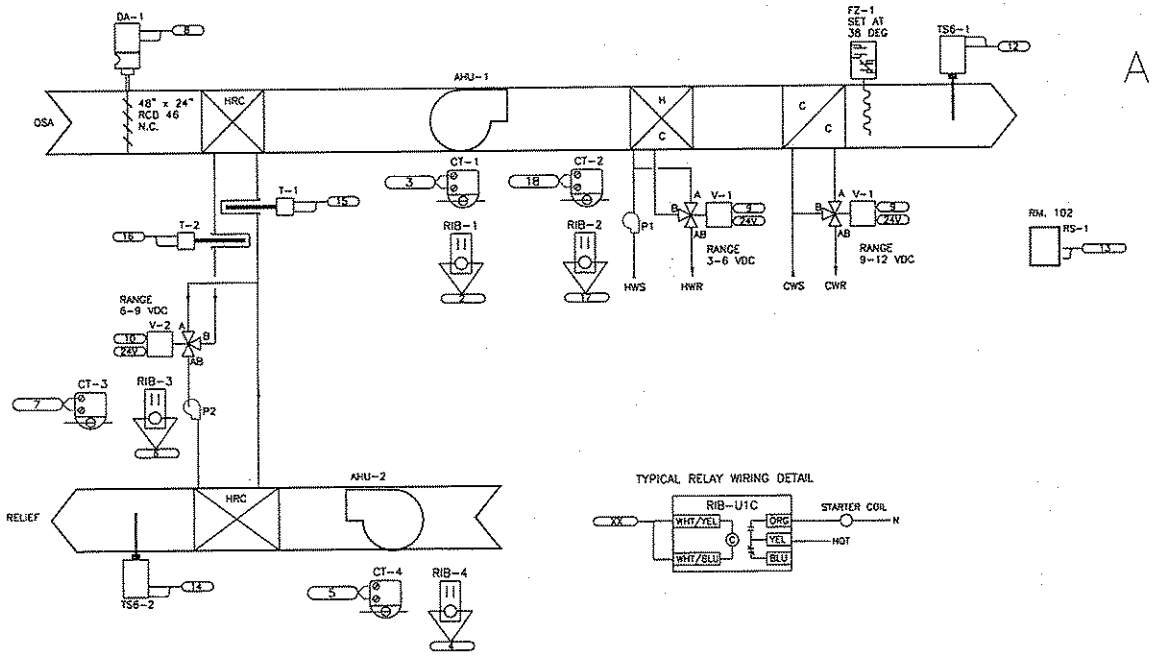

TYPICAL RELAY WIRING DETAIL

CONTROL LEVELS
① SCHEDULE
② HOST SCHEDULE
③ START TIME OPTIMIZATION
④ DUTY CYCLE
⑤ STOP TIME OPTIMIZATION
⑥ TEMPERATURE OVERRIDE
⑦ EDL SHED
⑧ SPECIAL 2
⑨ MANUAL
⑩ CONTROL S/S
⑪ OUTSIDE AIR OPTIMIZATION
⑫ SPECIAL 3
⑬ MINIMUM ON/OFF
⑭ EMERGENCY MANUAL
⑮ INTERSTART DELAY
⑯ SPECIAL 4
⊗G___ GLOBAL BROADCAST

Sequence of operation AHU 1 and AHU 2:

The AHU 1 and 2 will operate continuously with the outside air damper open. The supply air temperature will be reset based on the space temperature. The heating valve will modulated to maintain heating setpoint and the cooling valve will be modulated to maintain cooling setpoint. The freeze protection pump will operate continuously below 50 degrees outside air temperature.

A low limit thermostat will stop the fan motors, close the outside air damper, start the freeze protection pump and open the heating valve if 38 degree supply air temperature is detected.

The heat recovery pump will operate continuously below 85 degrees and above 75 degrees outside air temperature. The heat recovery coil valve will modulate to maintain minimum 32 degree discharge air temperature at AHU 2.

MSC-P1502
CONTROLLER
SLAVE # 40

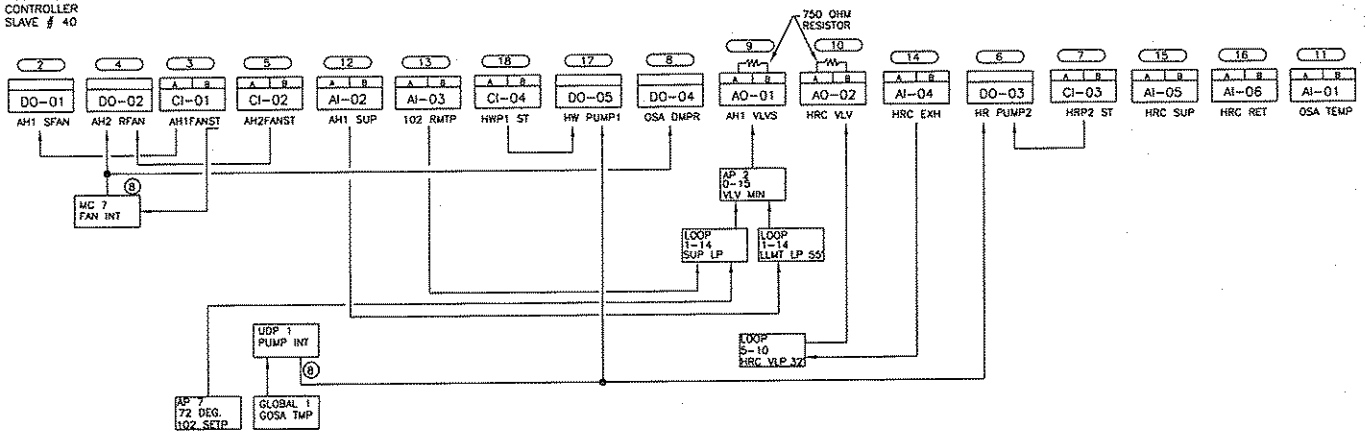

BILL OF MATERIALS

ID	MODEL NUMBER	DESCRIPTION	QTY
CT*	H-800	CURRENT STATUS SWITCH	4
DA-1	MA-7203	DAMPER ACTUATOR	1
FZ-1	T 322	FREEZE STAT	1
	MSC-P1502	PACKAGE UNIT CONTROLLER	1
RIB-*	RB-U1C	RELAY IN A BOX	4
RS-1	TS-5811-774	ROOM SENSOR W/ OVERRIDE	1
T*	TS-5821-101	IMMERSION TEMPERATURE SENSOR	2
	AT-225	BULB WELL FOR ABOVE	2
TS6-*	TS 5821	DUCT TEMPERATURE SENSOR	2
V-1	VS 9313-247-4-6	3/4" 3-WAY VALVE	2
V-2	VS 9313-247-4-8	1" 3-WAY VALVE	1

AS-BUILT: 9/29/97

PROJECT: FIRE STATION #3 F.A.F.B.	ROBERTSHAW Control Systems Division EAST 3915 MAIN-SPOKANE, WA.		
	TITLE: AHU-1 AND AHU-2		
DRN: BERNARDO & WILLIS	ENG: D.D.	DWN: D-A-S	CKD:
ENG: L & S ENGINEERING	APD:	FILE: 96014-2	DATE: 12.17.9
CONTR: RAMSETT MECHANICAL	Sheet 2 of 8	DWG: 965-96014-34	

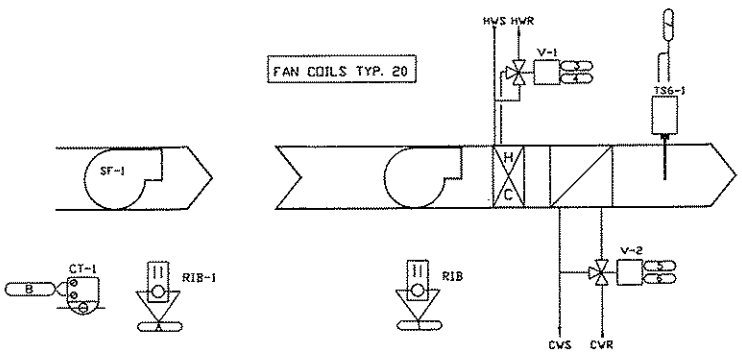

SF-1 IS CONTROLLED BY SLAVE 45 APPARATUS 4 ON SHEET 7. TYPICAL OF 1

TYPICAL FAN COIL

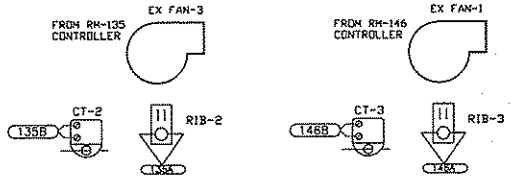

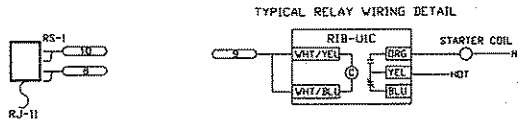

Sequence of operation fan coils:

Occupied mode: The unit fan will operate continuously. The supply air temperature will be reset based on the space temperature. The minimum supply air temperature will be 60 degrees (or as set). The heating valve will modulate open when the space temperature is below setpoint. The cooling valve will modulate open when the space temperature is above setpoint.

Unoccupied mode: The unit fan will be off. The unit fan will cycle with the heating or cooling valve to maintain unoccupied space setpoint. The override button on the space sensor will restore the unit to the occupied mode for a predetermined time.

Sequence of operation exhaust fan 1 and 3:

The fans will be on during the occupied mode and off during the unoccupied mode.

CONTROL LEVELS
① SCHEDULE
② HOST SCHEDULE
③ START TIME OPTIMIZATION
④ DUTY CYCLE
⑤ STOP TIME OPTIMIZATION
⑥ TEMPERATURE OVERRIDE
⑦ EDL SHED
⑧ SPECIAL 2
⑨ MANUAL
⑩ CONTROL S/S
⑪ OUTSIDE AIR OPTIMIZATION
⑫ SPECIAL 3
⑬ MINIMUM ON/OFF
⑭ EMERGENCY MANUAL
⑮ INTERSTART DELAY
⑯ SPECIAL 4
@G___ GLOBAL BROADCAST

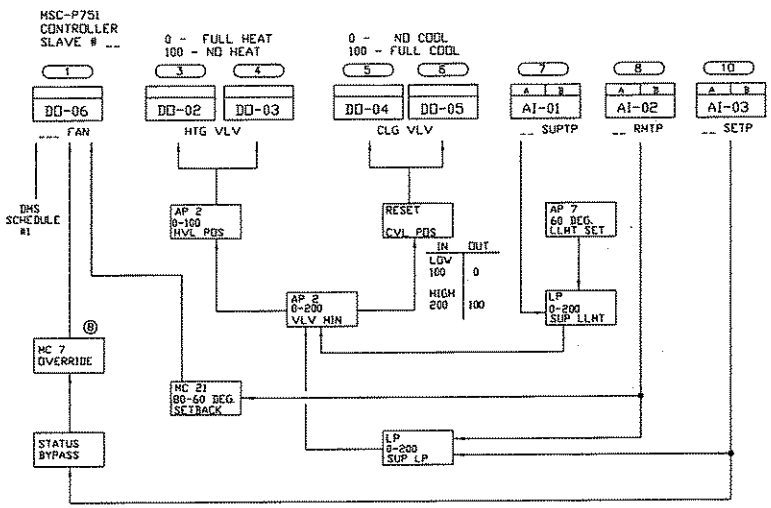

MISC. POINT LOCATION SCHEDULE			
SLAVE	FC-UNIT	POINT ID.	POINT NAME
SLV-41	RM-135	DO-05	EF3 SS
	RM-135	CI-02	EF3 ST
SLV-44	RM-146	DO-05	EF1 SS
	RM-146	CI-02	EF1 ST

BILL OF MATERIALS FOR FAN COILS

ID	MODEL NUMBER	DESCRIPTION	QTY
MSC*	MSC-P-751	PACKAGE UNIT CONTROLLER	20
RS*	TS-58501-772	ROOM SENSOR W/ SETPOINT & RJ-11	20
TS6*	TS-5821	DUCT TEMPERATURE SENSOR 6"	20
V-1	VF-9313-251-4-2	1/2" 3-WAY VALVE HEATING	20
V-2	VF-9313-251-4-2	1/2" 3-WAY VALVE COOLING	19
	VF-9313-251-4-4	1/2" 3-WAY VALVE COOLING FOR FC-19 ONLY	1
RIB*	RB-UIC	RELAY IN A BOX	20

BILL OF MATERIALS MISC.

ID	MODEL NUMBER	DESCRIPTION	QTY
CT*	H-800	CURRENT STATUS SWITCH	3
RIB-*	RB-UIC	RELAY IN A BOX	3

AS-BUILT: 9/29/97

PROJECT: FIRE STATION #3 F.A.F.B.	ROBERTSHAW Control Systems Division EAST 3915 MAIN-SPOKANE, WA.		
	FAN COILS TYPICAL OF 20		
ARCH: BERNARDO & WILLIS	ENG: D.D.	DWN: D-A-S	CKD:
ENGR: L &S ENGINEERING	APD:	FILE: 96014-3	DATE: 12.17.96
CONTR: RAMSETT MECHANICAL	Sheet 3 of 8	DWG: 965-96014-34	

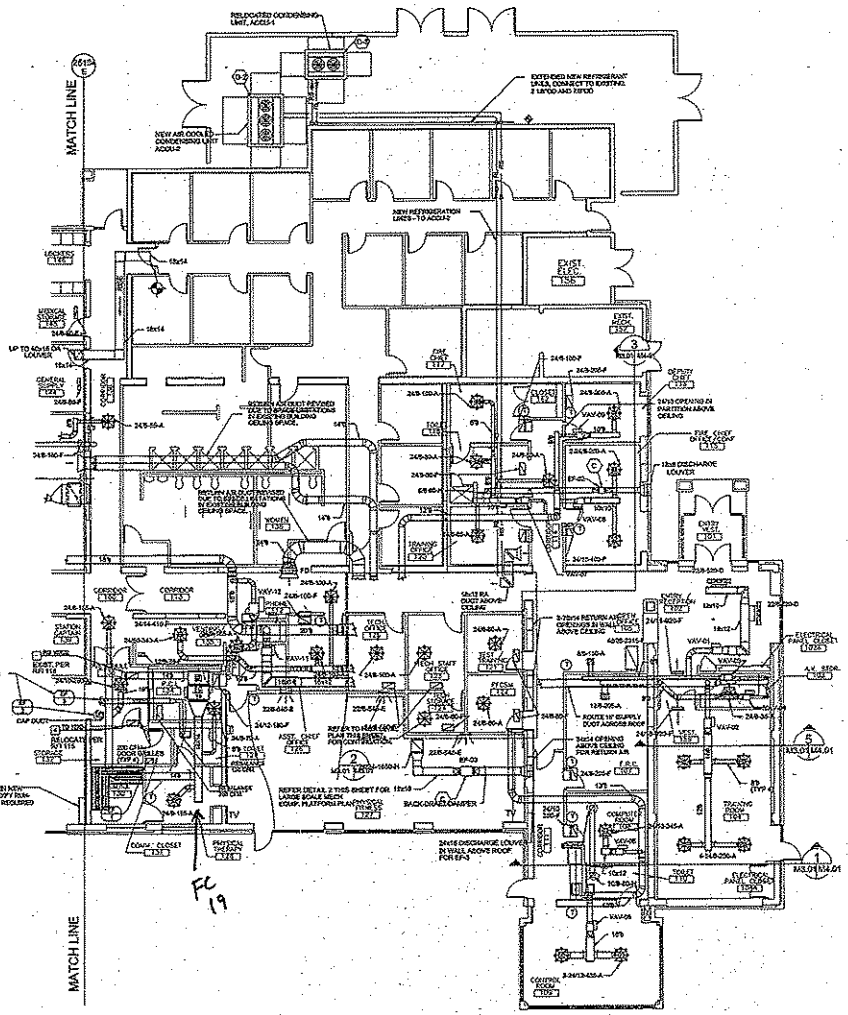

1 HVAC SEISMIC BRACING FLOOR PLAN - AREA "A"
M3.01 M4.01 SCALE: 1/8" = 1'-0"

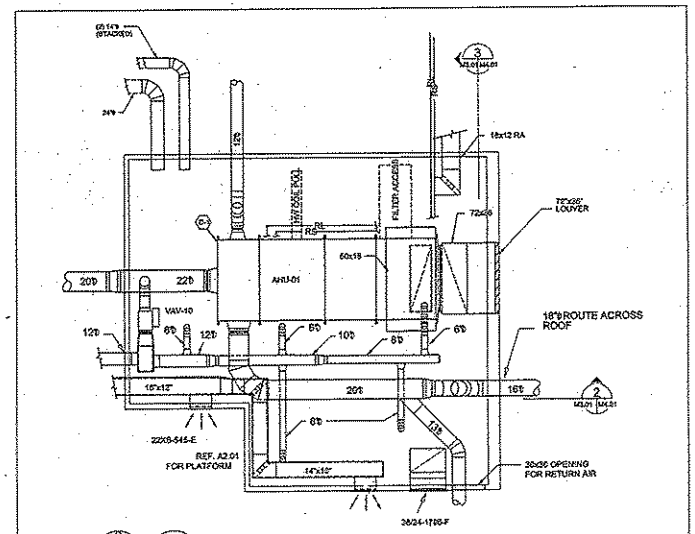

2 HVAC EQUIPMENT PLATFORM PLAN
M3.01 M4.01 SCALE: 1/4" = 1'-0"

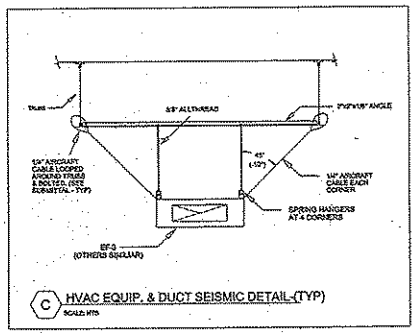

C HVAC EQUIP. & DUCT SEISMIC DETAIL-(TYP)
SCALE: NTS

1. AHU-1 SEISMIC RESTRAINT CONSISTS OF (4) 2"x2"x1/8" ANGLE IRON BRACES BOLTED BETWEEN UNIT AND FLOOR AT EACH CORNER WITH 1/2" BOLTS.
2. ACCU-2 SEISMIC RESTRAINT CONSISTS OF (8) VIBRATION ISOLATORS BOLTED BETWEEN UNIT AND HOUSEKEEPING PAD AT EACH CORNER WITH (2) 3/8" BOLTS PER ISOLATOR.
3. EXISTING ACCU-1 SEISMIC RESTRAINT CONSISTS OF (4) 2"x2"x 1/8" ANGLE IRON BRACES BOLTED BETWEEN UNIT AND HOUSEKEEPING PAD AT EACH CORNER WITH 1/2" BOLTS.

D HVAC FLOOR MOUNTED EQUIP. SEISMIC DETAIL
SCALE: NTS

PLATE M3.015

"REVISED AS-BUILT"

0 4' 8' 16' 24'
SCALE OF FULL SIZE PLOT: 1/4" = 1'-0"

GENERAL NOTES:

1. SEISMIC BRACING PER REQUIREMENTS OF SEISMIC ZONE 2B, SPECIFICATIONS AND APPROVED SUBMITTAL.

BLDG ϕϕϕ3
FIRE DEPT

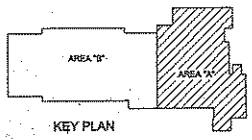

KEY PLAN

Darrott
Mechanical Incorporated
5600 N. GOVERNMENT WAY
COEUR D'ALENE, ID 83815
(208) 772-5165 Phone
(208) 772-5151 FAX

SYM	DESCRIPTION	DATE	BY
	REVISIONS		

U.S. ARMY
ENGINEER DISTRICT, SEATTLE
CORPS OF ENGINEERS
SEATTLE, WASHINGTON

ARCHITECT/ENGINEER:
FRANKFURT SHORTELLE ARCHITECTS P.C.

GENERAL CONTRACTOR:
DAGCO CONSTRUCTION
BRING CONTRACTOR:
C&F PLUMBING & HEATING, INC.
HVAC CONTRACTOR:
PARROTT MECHANICAL INC.
ELECTRICAL CONTRACTOR:
SUNRIDGE ELECTRIC

ADD / ALTER FIRE STATION

MECHANICAL FLOOR PLAN - AREA "A"
SEISMIC BRACING LOCATIONS

M3.015

FAIRCHILD AIR FORCE BASE

PN 0.90280021 WA

SIZE	CONTRACT NO.	DRAWN BY	DATE	PLATE
E	88181-C	RAR	10/25/00	M3.01

AS-BUILT ROOM NUMBERS INCORRECT (SEE BELOW)

Room 166

Room 167

Room 168

Room 169

Room 170

APPARATUS ROOM 101

FOR CONTINUATION SEE PLANT SHEET

FE 20, 21, 22 Select This Area

BLDG. 0003 FIRE DEPT.

DETAIL - EXHAUST LOUVER

MECHANICAL HVAC FLOOR PLAN - (AREA "B")

HVAC EQUIPMENT UPPER LEVEL LAYOUT PLAN - (AREA "B")

GENERAL NOTES:

1. ALL INTERIOR AIR DUCT TO BE INSULATED AS PER SPECIFICATION AND APPROVED SUBMITTAL.
2. HEATING WATER & CHILLED WATER PIPING NOT SHOWN. REFER TO PIPING DRAWINGS FOR ACTUAL LOCATION OF PIPING.
3. ALL SUPPLY AIR DUCT UPSTREAM & DOWNSTREAM OF VAV BOXES TO BE CLASS A SEAL AND 1 IN. W.G. (SHOP CLASSIFICATION).
4. ALL RETURN AIR & OUTSIDE AIR DUCT NOT EXTERNALLY LISTED TO BE INSULATED WITH 1 IN. MATTING AS PER SPECIFICATION & APPROVED SUBMITTALS.
5. REFER TO SUBMITTAL #120 FOR HANGER DETAILS, PRESSURE AND SEAL CLASSIFICATIONS.

KEY PLAN

AREA "B"

AREA "A"

"REVISED AS-BUILT"

SCALE OF FULL-SIZE PLOT: 1/8" = 1'-0"

IF SHEET MEASURES LESS THAN 24"x36" IT IS A REDUCED PRINT. REDUCE SCALE ACCORDINGLY

ONE	REVISED HOUSING LAYOUT FOR SEE HOME/ADDITIONS	10/29/99	RJW
TWO	REVISED PER SUBMITTAL REVIEW COMMENTS	01/28/99	RJW
THREE	REVISED PER "AS-BUILT" DRAWINGS	09/29/01	RJW
FOUR		DATE	BY

(REVISIONS)

U.S. ARMY
ENGINEER DISTRICT, SEATTLE
CORPS OF ENGINEERS
SEATTLE, WASHINGTON

GENERAL CONTRACTOR:
DATE CONSTRUCTION
DEPARTMENT CONSTRUCTION
GUY FUNDELL HEATING INC.
HVAC CONTRACTOR:
PLUMBING CONTRACTOR:
ELECTRICAL CONTRACTOR:
SHOP DRAWING

ARCHITECT/ENGINEER:
PLUMBING SHOP DRAWING REVIEWER:

Parrott
Mechanical Incorporated
5500 N. GOVERNMENT WAY
COEUR D'ALENE, ID. 83815
(208) 772-6165 Phone
(208) 772-6151 FAX

ADD / ALTER FIRE STATION

MECHANICAL HVAC FLOOR PLAN - AREA "B"
RECORD DRAWINGS

FAIRCHILD AIR FORCE BASE

FY 0302B0021

DATE	DRAWN	CHECKED	DATE	SHEET
11/	RJW	RJW	01/28/99	M3.02

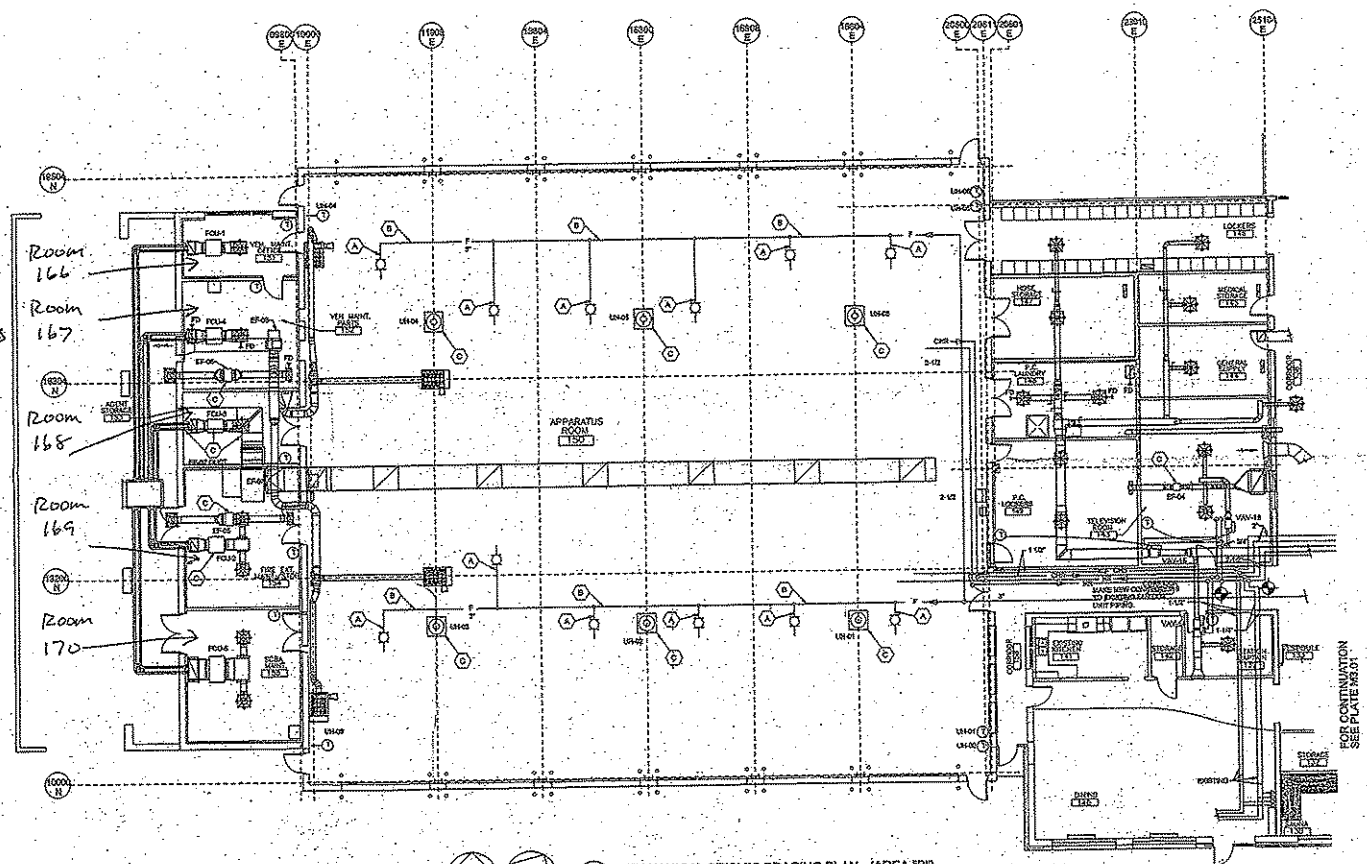

2 MECHANICAL SEISMIC BRACING PLAN - (AREA "B")

BLDG. ϕϕϕ3
FIRE DEPT.

GENERAL NOTES:

1. SEISMIC BRACING PER REQUIREMENTS OF SEISMIC ZONE 2B, SPECIFICATIONS AND APPROVED SUBMITTAL.

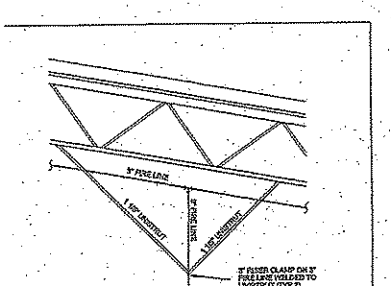

A PIPING SEISMIC DETAIL - (TYP 12)
SCALE: NTS

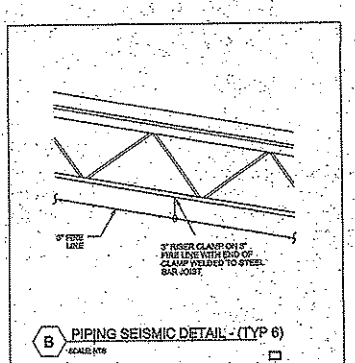

B PIPING SEISMIC DETAIL - (TYP 6)
SCALE: NTS

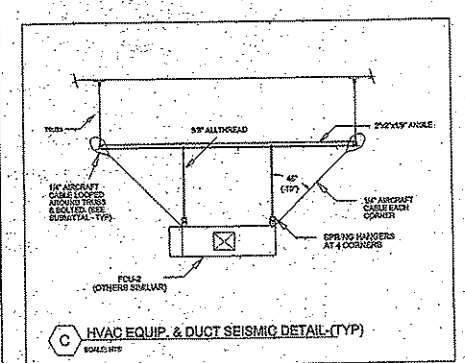

C HVAC EQUIP. & DUCT SEISMIC DETAIL-(TYP)
SCALE: NTS

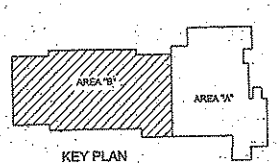

KEY PLAN

Darrott Mechanical Incorporated
5600 N. GOVERNMENT WAY
COEUR D'ALENE, ID 83815
(208) 772-6165 Phone
(208) 772-6151 FAX

"REVISED AS-BUILT"

SCALE OF FULL SIZE PLOT: 1/8" = 1'-0"

SYMBOL	DESCRIPTION	DATE	BY

REVISIONS

U.S. ARMY
ENGINEER DISTRICT, SEATTLE
CORPS OF ENGINEERS
SEATTLE, WASHINGTON

GENERAL CONTRACTOR:
SUPPORT CONSTRUCTION
PLUMBING CONTRACTOR:
DAR PLUMBING & HEATING, INC.
HVAC CONTRACTOR:
DARROTT MECHANICAL, INC.
ELECTRICAL CONTRACTOR:
SUPPLIED ELECTRIC

ARCHITECT/ENGINEER:
TRINITY ARCHITECTS, PS (ASSOCIATED), P.S.

ADD / ALTER FIRE STATION

MECHANICAL FLOOR PLAN - AREA "B"
SEISMIC BRACING LOCATIONS

FAIRCHILD AIR FORCE BASE — PN DACA68-00-21 — WA

SIZE	PROJECT NO.	DRAWING NO.	DATE	PLATE
F	98151-C	PAR-	11/8/99	M5.02-S

AS-BUILT Room Numbers Are INCORRECT
See Below for Room Numbers AT BUILDING

MEZZANINE MECH ROOM
CONTROLLERS 40, 50, 51 (ANGS)

MECH Room

Room 166
Room 167
Room 168
Room 169
Room 170

OVERALL FACILITY PLAN
A2.01 A2.01 SCALE: 3/32"=1'-0"
H:\PROJECT\ARCHLD\F769\BACK\H769A202

KEYED NOTES:

GENERAL NOTES:

C1 PROVIDE GUARDRAIL AT ALL OPEN EDGES OF ATTIC PLATFORM CONSISTING OF 4"x5/8" FIRE RATED PLYWOOD. ATTACH TO STRUCTURE ABOVE AND BELOW. ALL COLD-FORMED METAL FRAMING WALLS SUPPORTING THE PLATFORM/CATWALK JOISTS, SHALL BE 20GA, AND BUILT IN ACCORDANCE WITH SPECIFICATION SECTION 05400, COLD-FORMED METAL FRAMING.

C2 PROVIDE AUTOMATIC CLOSING ACCESS PANEL THROUGH DRAFT STOP WALL, 2'-0" WIDE x 4'-0" HIGH. BOTTOM LOCATED 11'-2" ABOVE FINISH FLOOR. ALL EDGES TO BE WEATHER SEALED.

C3 PROVIDE FIRE RATED (TO MATCH WALL PENETRATED) AUTOMATIC CLOSING ACCESS PANEL THROUGH FIRE WALL 2'-0" WIDE x 4'-0" HIGH. BOTTOM OF DOOR 11'-2" ABOVE FINISH FLOOR. ALL EDGES TO BE WEATHER SEALED.

C4 IN ROOM 154 (FIRE EXT. MAINT./STOR.), PROVIDE 2-1/2" OD GALVANIZED PIPE, WITH TWO THREADED GALVANIZED CAPS, THROUGH EXTERIOR MASONRY WALL. LOCATE PASS-THROUGH PIPE AT 4' TO 5' ABOVE FLOOR, AND APPROXIMATELY 1' SOUTH OF EXTERIOR DOUBLE DOORS.

DISTANCE FROM DATUM
DIRECTION FROM DATUM
DATUM POINT

THE FIVE DIGIT NUMBER REPRESENTS THE DISTANCE IN FEET AND INCHES (ROUNDED TO THE NEAREST 1/2") FROM A PREDETERMINED DATUM POINT WHERE THE DATUM POINT IS DESIGNATED TO BE 00'-00"

THE LETTER N OR E REPRESENTS THE DIRECTIONS NORTH OR EAST OF THE DATUM POINT WHERE THE GRID LINE IS LOCATED.

EXAMPLE: 15004 N REPRESENTS 150'-4" NORTH OF THE DATUM POINT.

GRID LINE DEFINITION

LEGEND

- NEW FIRE PROTECTION THIS AREA
- ELECTRICAL WORK ONLY
- EXISTING TO REMAIN
- NEW WALLS
- NEW GLAZING
- INDICATES UPPER LEVEL MECHANICAL PLATFORM

0 4' 8' 16' 32'
SCALE OF FULL SIZE PLOT: 3/32" = 1'-0"
IF SHEET MEASURES LESS THAN 26"x40" IT IS A REDUCED PRINT. REDUCE SCALE ACCORDINGLY

BLDG. ΦΦΦ3
FIRE STATION
FLOOR PLAN

FRANKFURT SHORT BRUZA ASSOCIATES, P.C.
ARCHITECTS ENGINEERS PLANNERS
5601 N. BROADWAY, SUITE 500
OKLAHOMA CITY, OK 73118
PHONE (405) 840-2931
FAX (405) 842-7750

KEY PLAN
AREA "B"
AREA "A"

	REVISED AS-BUILT	4/7/2000	
DRAWN	REVISION	DATE	BY

REVISIONS

FSB — U.S. ARMY ENGINEER DISTRICT, SEATTLE CORPS OF ENGINEERS SEATTLE, WASHINGTON

ADD / ALTER FIRE STATION

OVERALL FACILITY PLAN

FAIRCHILD AIR FORCE BASE — PH GJKZ880021 — WA

SIZE	DRAWING NO.	FILE NO.	DATE	PLATE
F		239a/730-90-03	98 MAY 15	A2.01

DSGN P. MORGAN — DWN MARCISZEWSKI — SHEET 42

AS-BUILT

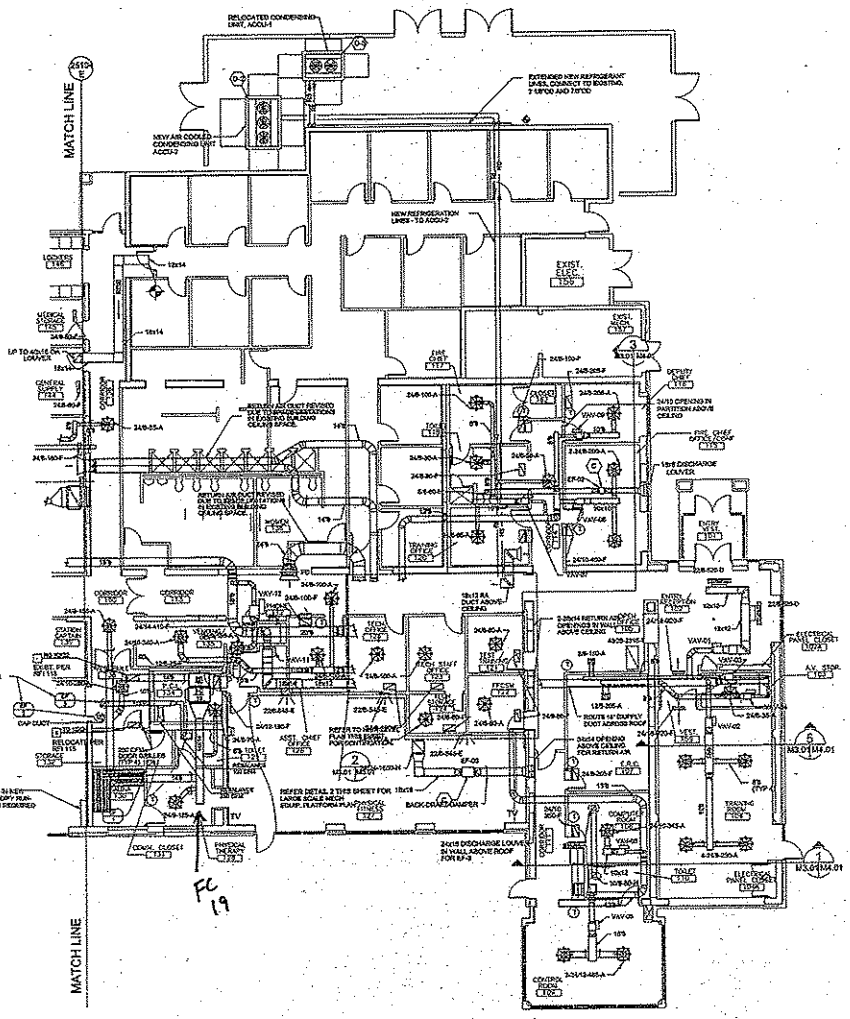

1 HVAC SEISMIC BRACING FLOOR PLAN - AREA "A"
SCALE:3/8"=1'-0"

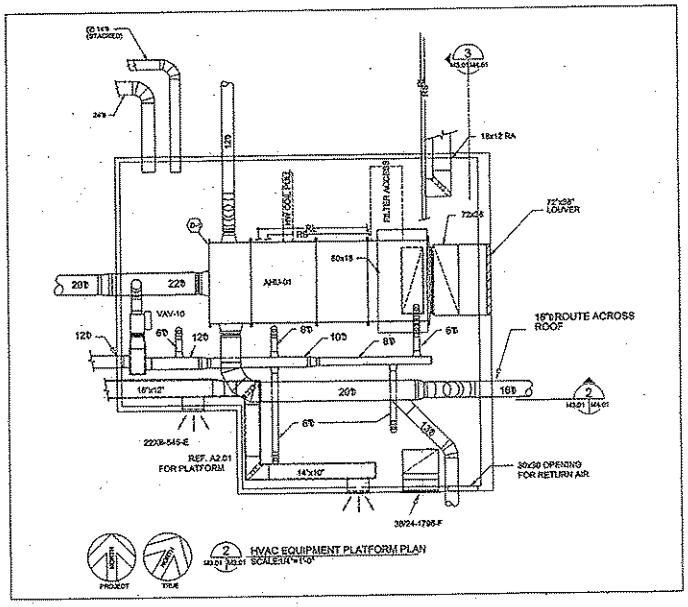

2 HVAC EQUIPMENT PLATFORM PLAN
SCALE:1/4"=1'-0"

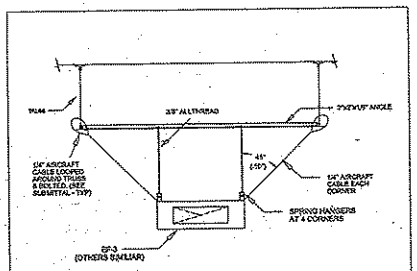

C HVAC EQUIP. & DUCT SEISMIC DETAIL-(TYP)
SCALE: NTS

1. AHU-1 SEISMIC RESTRAINT CONSISTS OF (4) 3"x3"x1/8" ANGLE IRON BRACES BOLTED BETWEEN UNIT AND FLOOR AT EACH CORNER WITH 1/2" BOLTS.
2. ACCU-2 SEISMIC RESTRAINT CONSISTS OF (4) VIBRATION ISOLATORS BOLTED BETWEEN UNIT AND HOUSEKEEPING PAD AT EACH CORNER WITH (2) 3/8" BOLTS PER ISOLATOR.
3. EXISTING ACCU-1 SEISMIC RESTRAINT CONSISTS OF (4) 3"x3"x1/8" ANGLE IRON BRACES BOLTED BETWEEN UNIT AND HOUSEKEEPING PAD AT EACH CORNER WITH 1/2" BOLTS.

D HVAC FLOOR MOUNTED EQUIP. SEISMIC DETAIL
SCALE: NTS

PLATE M3.01S

"REVISED AS-BUILT"

SCALE OF FULL SIZE PLOT: 1/4" = 1'-0"

GENERAL NOTES:

1. SEISMIC BRACING PER REQUIREMENTS OF SEISMIC ZONE 2B, SPECIFICATIONS AND APPROVED SUBMITTAL.

BLDG ϕϕϕ3
FIRE DEPT

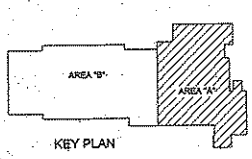

KEY PLAN

Barrett Mechanical Incorporated
5600 N. GOVERNMENT WAY
COEUR D'ALENE, ID 83815
(208) 772-5105 Phone
(208) 772-8151 FAX

MARK	DESCRIPTION	DATE	BY

REVISIONS

U.S. ARMY
ENGINEER DISTRICT, SEATTLE
CORPS OF ENGINEERS
SEATTLE, WASHINGTON

GENERAL CONTRACTOR:
BUILDER CONSTRUCTION
FIRE PROTECTION CONTRACTOR:
EAST COAST FIRE & SAFETY, INC.
HVAC CONTRACTOR:
BARRETT MECHANICAL, INC.
ELECTRICAL CONTRACTOR:
ENGINEERED ELECTRIC

ARCHITECT/ENGINEER:
PROJECT MANAGER: BRUCE HOPCROFT, P.E.

ADD / ALTER FIRE STATION

MECHANICAL FLOOR PLAN - AREA "A"
SEISMIC BRACING LOCATIONS

M3.01S

FAIRCHILD AIR FORCE BASE

PR GJKZ850021 V/A

FILE	PROJECT NO.	DRAWN BY	DATE	PLATE
E	97151-0	RAT	10/29/99	M3.01S

AS-BUILT ROOM NUMBERS INCORRECT (SEE BELOW)

Room 166

Room 167

Room 168

Room 169

Room 170

APPARATUS ROOM

FOR CONTINUATION SEE PLAN E1.01

FC 20, 21, 22 Serves this area

BLDG. ΦΦΦ3 FIRE DEPT.

DETAIL - EXHAUST LOUVER

2 MECHANICAL HVAC FLOOR PLAN - (AREA "B")

2 HVAC EQUIPMENT UPPER LEVEL LAYOUT PLAN - (AREA "B")

PROJECT NORTH

TRUE NORTH

"REVISED AS-BUILT"

SCALE OF FULL-SIZE PLOT: 1/8" = 1'-0"

IF SHEET MEASURES LESS THAN 22"x34" IT IS A REDUCED PRINT. REDUCE SCALE ACCORDINGLY

ONE	REVISED HVAC/ELEC/SUP FOR BIDS HOMEBUILDING	05/22/98	RWK
TWO	REVISED PER SUBMITTAL REVIEW COMMENTS	07/20/98	RWK
THREE	REVISED PER "AS-BUILT" CHANGES	08/21/98	RWK
FOUR		08/21/98	RWK

REVISIONS

U.S. ARMY
ENGINEER DISTRICT, SEATTLE
CORPS OF ENGINEERS
SEATTLE, WASHINGTON

MECHANICAL CONTRACTOR: DAVID CONSTRUCTION
PLUMBING CONTRACTOR: DAVID CONSTRUCTION
ELECTRICAL CONTRACTOR: ELECTRICAL CONTRACTOR
HVAC CONTRACTOR: PARROTT MECHANICAL INC
ARCHITECT OF RECORD: MACKENZIE ARCHITECTURE P.A.
ELECTRICAL CONTRACTOR: CHAMPION ELECTRIC

ADD / ALTER FIRE STATION

MECHANICAL HVAC FLOOR PLAN - AREA "B"
RECORD DRAWINGS

FAIRCHILD AIR FORCE BASE

PAX 0.0/2290021

SIZE	CODE	DRAWN BY	CHECKED BY	DATE	SHEET
F		JB/MJC	RWK	01/05/99	M3.02

GENERAL NOTES:

1. ALL OUTDOOR AIR DUCT TO BE INSULATED AS PER SPECIFICATION AND APPROVED SUBMITTAL.
2. HEATING WATER & CHILLED WATER PIPE WORK NOT SHOWN, REFER TO PIPING DRAWINGS FOR ACTUAL LOCATION OF PIPEWORK.
3. ALL SUPPLY AIR DUCT UPSTREAM & DOWNSTREAM OF VAV BOXES TO BE CLASS A SEAL AND 3" P.I. HVAC SMACNA CLASSIFICATION.
4. ALL RETURN / EXHAUST AIR DUCT WITHIN CONDITIONED SPACE NOT USED TO BE INSULATED WITH 1 1/2" DUCTWRAP AS PER SPECIFICATION & APPROVED SUBMITTAL.
5. REFER TO ESSENTIAL #129 FOR HANGER DETAILS, PRESSURE AND SEAL CLASSIFICATIONS.

KEY NOTES - AS-BUILT "AS-BUILT" DRAWINGS

AREA "B"

AREA "A"

KEY PLAN

Parrott
Mechanical Incorporated
6600 N. GOVERNMENT WAY
COEUR D'ALENE, ID 83815
(208) 772-5165 Phone
(208) 772-6151 FAX

A-S-BUILT
Room Numbers
Are
INCORRECT

Room 166
Room 167
Room 168
Room 169
Room 170

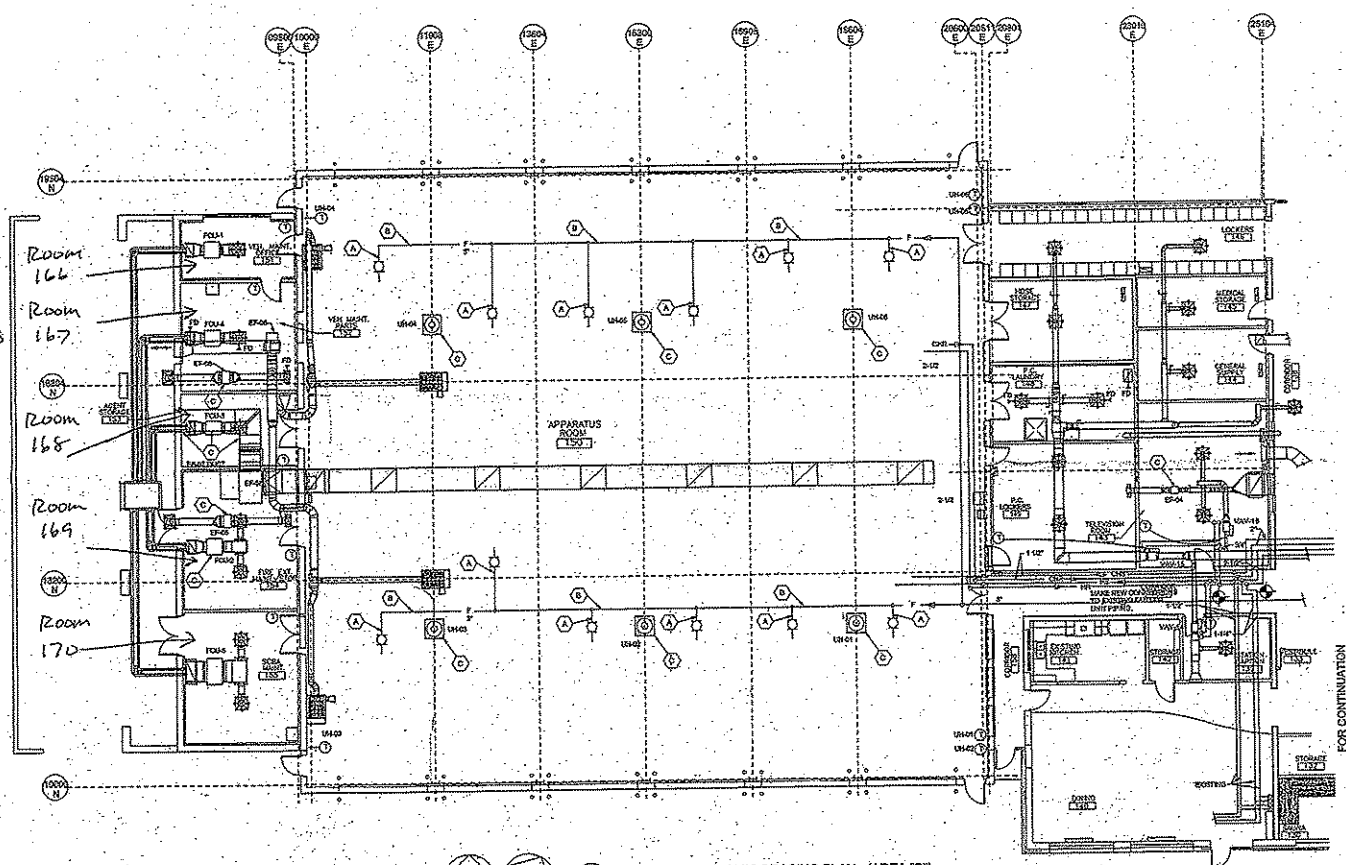

2 MECHANICAL SEISMIC BRACING PLAN - (AREA "B")

BLDG. ØØØ3
FIRE DEPT.

GENERAL NOTES:

1. SEISMIC BRACING PER REQUIREMENTS OF SEISMIC ZONE 2B, SPECIFICATIONS AND APPROVED SUBMITTAL.

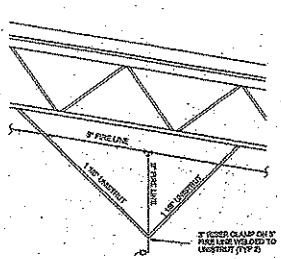

A PIPING SEISMIC DETAIL - (TYP 12)
SCALE: NTS

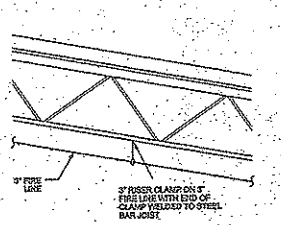

B PIPING SEISMIC DETAIL - (TYP 6)
SCALE: NTS

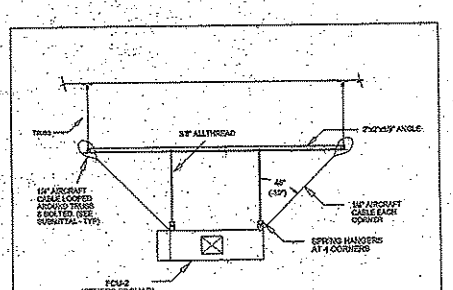

C HVAC EQUIP. & DUCT SEISMIC DETAIL-(TYP)
SCALE: NTS

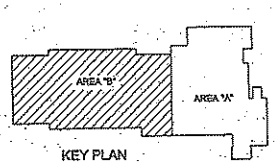

KEY PLAN

Darrott
Mechanical Incorporated
5800 N. GOVERNMENT WAY
COEUR D'ALENE, ID 83815
(208) 772-5165 Phone
(208) 772-8161 FAX

"REVISED AS-BUILT"

0 2' 8' 16' 24'
SCALE OF FULL SIZE PLOT: 1/2" = 1'-0"

SYMBOL	DESCRIPTION	DATE	BY

REVISIONS

U.S. ARMY
ENGINEER DISTRICT, SEATTLE
CORPS OF ENGINEERS
SEATTLE, WASHINGTON

ARCHITECT/ENGINEER:
FRANKFURT-SHORT-MILES & ASSOCIATES, P.C.

GENERAL CONTRACTOR:
DAVCO CONSTRUCTION
ELECTRICAL CONTRACTOR:
DUNCAN ELECTRIC

ADD / ALTER FIRE STATION

MECHANICAL FLOOR PLAN - AREA "B"
SEISMIC BRACING LOCATIONS

FAIRCHILD AIR FORCE BASE PN DACZ80-00021 WA

SIZE	FRANKFURT-SHORT-MILES & ASSOCIATES, P.C.		DATE	PLATE
F	98181-0	RAR	11/02/99	M3.02-S

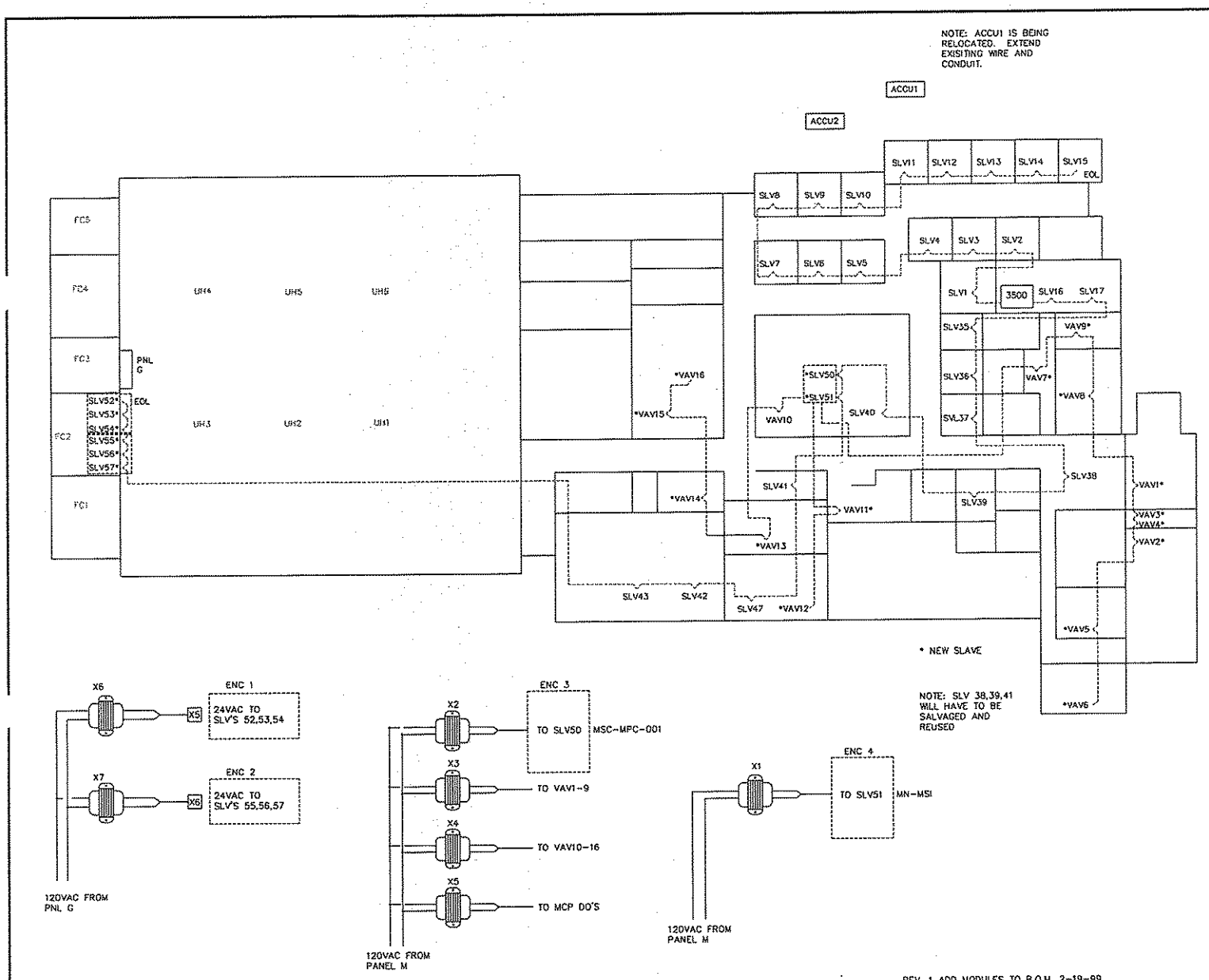

REV. 1 ADD MODULES TO B.O.M. 2-19-99

BILL OF MATERIALS

ID	MODEL NUMBER	DESCRIPTION	QTY
X1,2	AT150F 1022	120VAC/24VAC 50VA TRANSFORMER	2
X3,4,5	AT175F 1023	120VAC/24VAC 75VA TRANSFORMER	3
X6,7	AT175F 1023	120VAC/24VAC 75VA TRANSFORMER	2
ENC1-3	E-24N20B	ENCLOSURE	3
	E-24P20		3
SLV50	MSC-MPC-001	CONTROLLER	1
	MPC-4C0	MODULE	2
	MPC-4A0	MODULE	1
SLV51	MN-MSI	CONTROLLER	1
VAV1-16	MN-FL03T	VAV CONTROLLER	16
SLV52	MSC-P1502	CONTROLER	1
SLV53-57	MSC-P1501	CONTROLER	5
ENC4	12184SC	NEMA 1 ENCLOSURE	1

REVISIONS

RECORD DRAWING DATE: 3-30-99 BY: R.K.

SIEBE ENVIRONMENTAL CONTROLS

SIEBE ENVIRONMENTAL CONTROLS
7222 E. NORA
SPOKANE, WA. 99212

DESCRIPTION

TRUNK AND POWER LAYOUT

JOB NAME	ADD/ALTER FIRE STATION
LOCATION	BLDG. 3 FAIRCHILD AIR FORCE BASE
ARCHITECT	FRANK SHORT BRUZA
ENGINEER	ARMY CORPS OF ENGINEERS
CONTRACTOR	C & R PLUMBING
ENGR'D BY	D. DARLING
DRAWN BY	R.K.
PROJECT NO.	965-99027-34

DRAWING NO. 99027-1

DATE 1-27-98 SHEET 1 OF 7

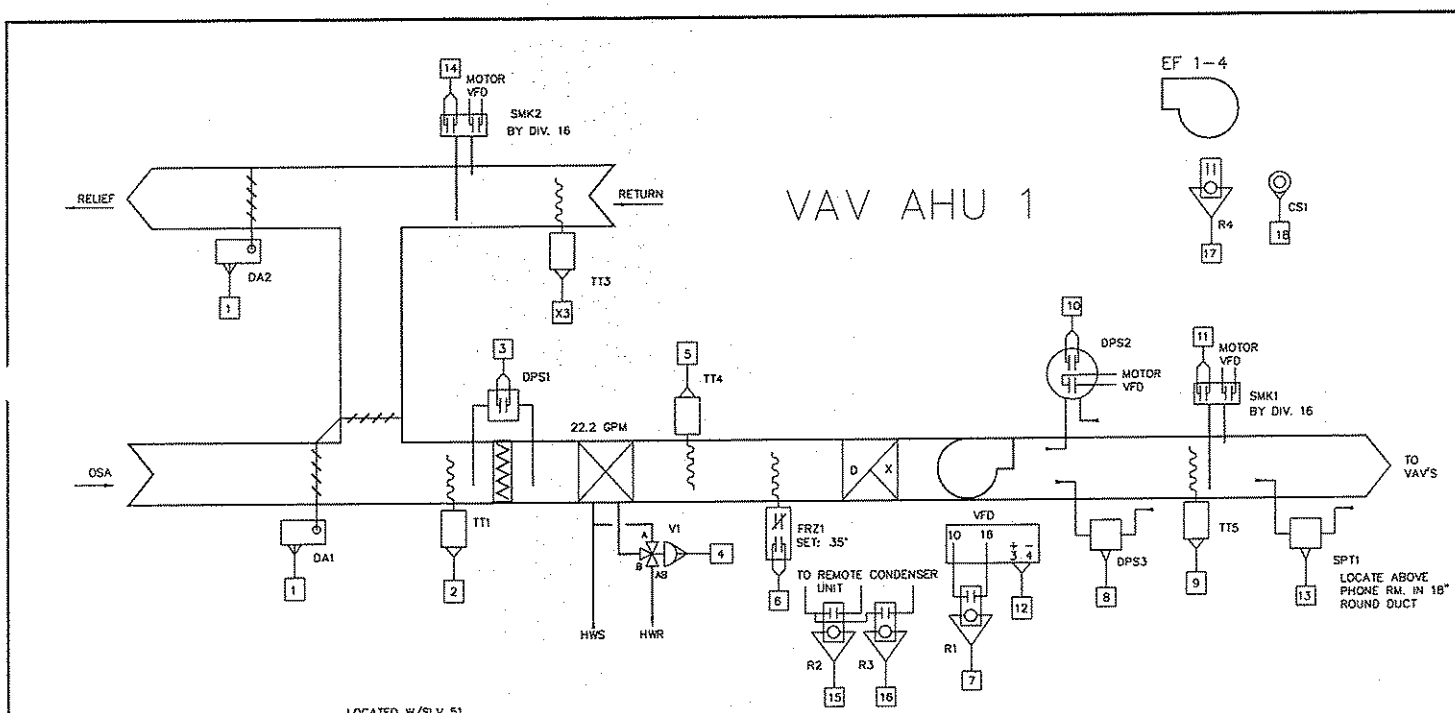

Sequence of operation AHU 1

This unit operates 24 hours a day seven days a week.

Occupied mode: The supply will be on continuously. The supply fan variable frequency drive signal will modulate to maintain .75" wc (or as set). A high static pressure switch will stop the fan if 3.0" wc is sensed (or as set), this device will have to be manually reset if tripped. The preheat coil valve will modulate to maintain 51 degree leaving coil temperature. The stages of d/x will be energized above 55 degree outside air temperature to maintain 51 degree supply air temperature. When the return air temperature is above 68 degrees and the outside air temperature is 3 degrees less than the return air temperature the economizer dampers will modulate to maintain 52 degrees mixed air temperature. When the return air is less than 68 degrees the dampers will be positioned to minimum.

A low limit thermostat will stop the fan, position the dampers to full recirculation and generate an alarm at the building automation system if 35 degrees is sensed at the leaving side of the preheat coil.
A differential pressure switch across the filter will indicate a dirty filter at 1" wc (or as set).
Smoke detectors in the supply and return air ducts will stop the supply fan and position the dampers to full recirculation if either detector senses smoke.

99027-5.doc

BILL OF MATERIALS

ID	MODEL NUMBER	DESCRIPTION	QTY
DA1,2	MS-7203	DAMPER ACTUATOR	2
TT*	TS-8405	TEMPERATURE SENSOR	4
DPS1,3	R436	DIFF. PRESSURE SW.	2
V1		SEE VALVE SCHEDULE	
FRZ1	T322	FREEZE STAT	1
DPS2	3004 W/A-601	PRESSURE SWITCH	1
SPT1	PP-2446	STATIC PRESSURE TRANSMITTER	1
R1-3	RH2B/SH2B	RELAY & BASE	3
R4	RB-01C	RELAY	4
CS1	E112-800	CURRENT SWITCH	4

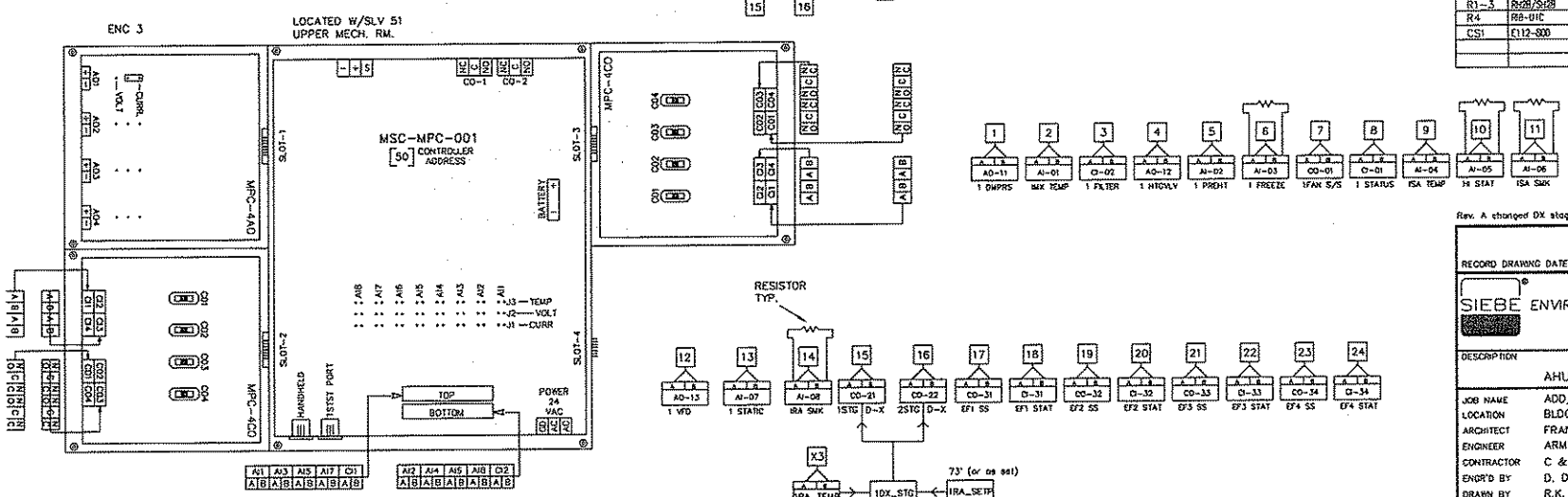

Rev. A changed DX staging ZAU001 P.Z.

REVISIONS

RECORD DRAWING DATE: 3-31-99 BY: R.K.

SIEBE ENVIRONMENTAL CONTROLS

SIEBE ENVIROMENTAL CONTROLS
7222 E. NORA
SPOKANE, WA. 99212

DESCRIPTION

AHU-1

JOB NAME	ADD/ALTER FIRE STATION
LOCATION	BLDG. 3 FAIRCHILD AIR FORCE BASE
ARCHITECT	FRANK SHORT BRUZA
ENGINEER	ARMY CORPS OF ENGINEERS
CONTRACTOR	C & R PLUMBING
ENGR'D BY	D. DARLING
DRAWN BY	R.K.
PROJECT NO.	965-99027-34

DRAWING NO. 99027-2 0003C2

DATE 1-27-99 SHEET 2 OF 7

SEE SHEET 1 FOR TRUNK AND POWER

REV. 1 ADD EF CONTROL 2-19-99

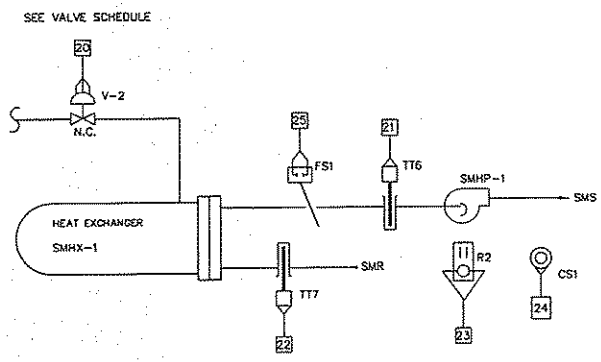

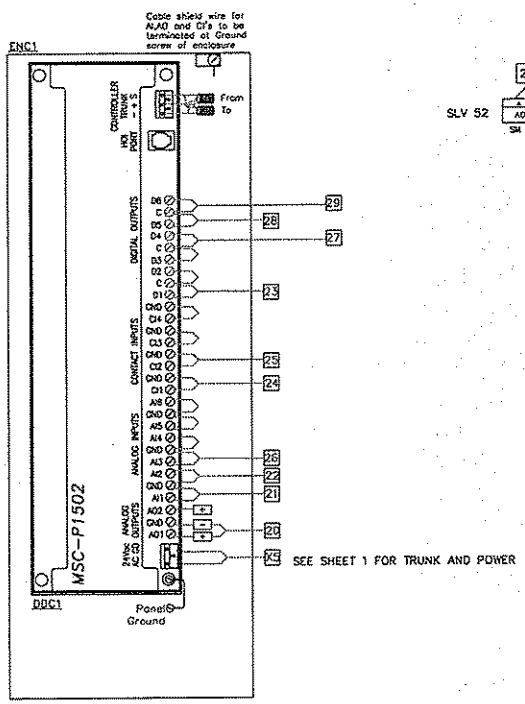

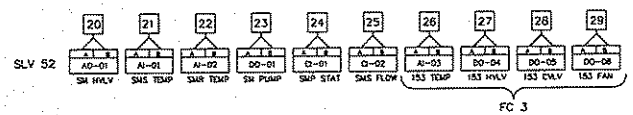

Sequence of operation Snow Melt System:

When the outside air temperature is less than 35 degrees (or as set), the snow melt heating water pump SMHP1 will be enabled. The hot water heating valve will modulate to maintain the 115 degree supply water to the snow melt piping.

The snow melt pump will be stopped when the outside air temperature rises above 40 degrees (or as set). The snow melt pump will stop if the supply water temperature rises above 115 degrees.

99027-2.doc

BILL OF MATERIALS

ID	MODEL NUMBER	DESCRIPTION	QTY
TT6,7	TS-8201-106	TEMPERATURE SENSOR	2
	AT-225	WELL	2
FS1	E-201-1	FLOW SWITCH	1
R2	RB-UIC	RELAY BASE	1
CS1	E112-800	CURRENT SENSOR	1

REVISIONS

RECORD DRAWING DATE: BY:

SIEBE ENVIRONMENTAL CONTROLS

SIEBE ENVIRONMENTAL CONTROLS
7222 E. NORA
SPOKANE, WA. 99212

DESCRIPTION

SNOW MELT SYSTEM

JOB NAME	ADD/ALTER FIRE STATION
LOCATION	BLDG. 3 FAIRCHILD AIR FORCE BASE
ARCHITECT	FRANK SHORT BRUZA
ENGINEER	ARMY CORPS OF ENGINEERS
CONTRACTOR	C & R PLUMBING
ENGR'D BY	D. DARLING
DRAWN BY	R.K.
PROJECT NO.	965-99027-34

DRAWING NO. 99027-4

DATE 1-27-99 SHEET 4 OF 7

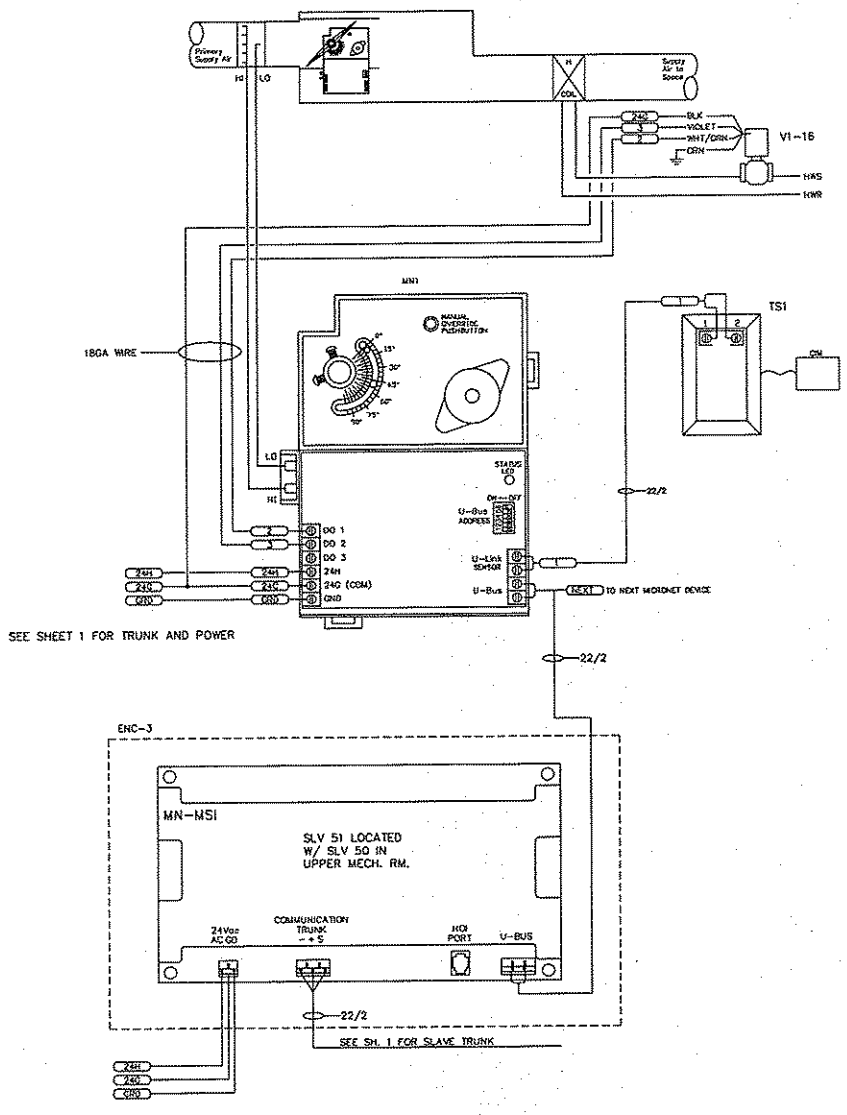

Sequence of operation Terminal Variable Air Volume Boxes:

When the space temperature is below setpoint the vav box damper will modulate to minimum air flow and the heating valve will open to the coil. As space temperature rises to heating setpoint the valve will close, a further rise in space temperature the vav box damper will modulate to maximum air flow to maintain cooling setpoint.

99027-6.doc

BILL OF MATERIALS

ID	MODEL NUMBER	DESCRIPTION	QTY
MN1	MN-FL03T	VAV CONTROLLER	16
TS1	MN-S	TEMPERATURE SENSOR	16
V1-16		SEE VALVE SCHEDULE	

REVISIONS

RECORD DRAWING DATE: 3-30-99 BY: R.K.

SIEBE ENVIRONMENTAL CONTROLS

SIEBE ENVIRONMENTAL CONTROLS
7222 E. NORA AVE
SPOKANE, WA. 99212

DESCRIPTION

VAV BOXES

JOB NAME	ADD/ALTER FIRE STATION
LOCATION	BLDG. 3 FAIRCHILD AIR FORCE BASE
ARCHITECT	FRANK SHORT BRUZA
ENGINEER	ARMY CORPS OF ENGINEERS
CONTRACTOR	C & R PLUMBING
ENGR'D BY	D. DARLING
DRAWN BY	R.K.
PROJECT NO.	965-99027-34

DRAWING NO. 99027-3

DATE 1-27-99 SHEET 3 OF 7

AHU 1/2 (LOCKER ROOMS)

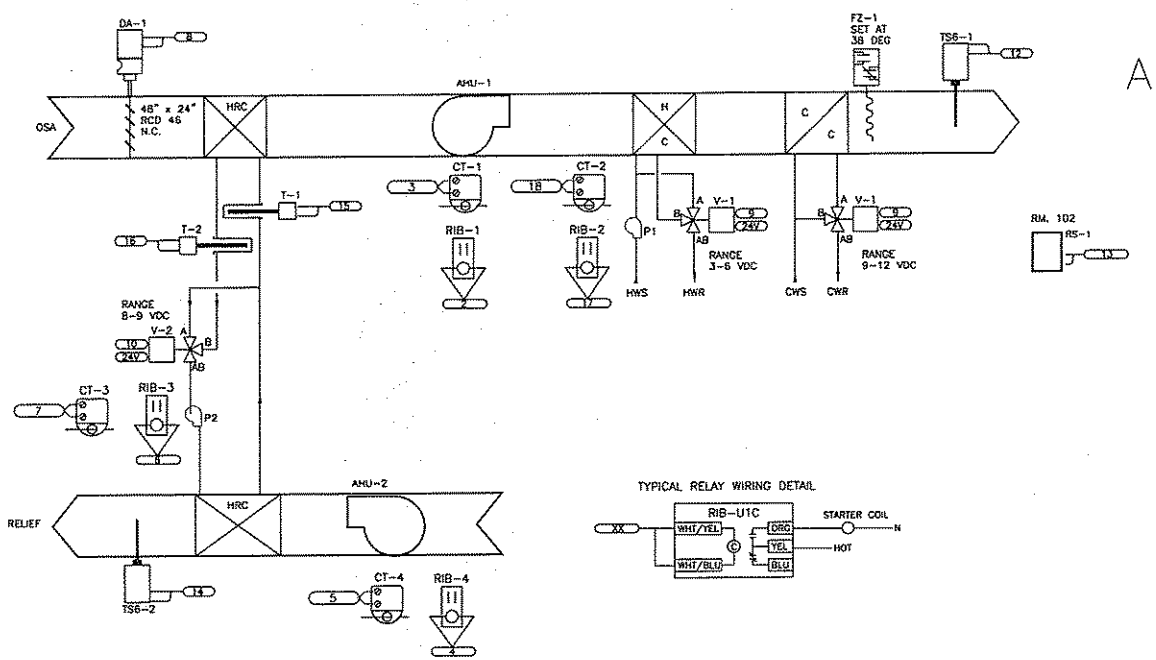

TYPICAL RELAY WIRING DETAIL

CONTROL LEVELS
1 SCHEDULE
2 HOST SCHEDULE
3 START TIME OPTIMIZATION
4 DUTY CYCLE
5 STOP TIME OPTIMIZATION
6 TEMPERATURE OVERRIDE
7 EDL SHED
8 SPECIAL 2
9 MANUAL
10 CONTROL S/S
11 OUTSIDE AIR OPTIMIZATION
12 SPECIAL 3
13 MINIMUM ON/OFF
14 EMERGENCY MANUAL
15 INTERSTART DELAY
16 SPECIAL 4
©G____ GLOBAL BROADCAST

Sequence of operation AHU 1 and AHU 2:

The AHU 1 and 2 will operate continuously with the outside air damper open. The supply air temperature will be reset based on the space temperature. The heating valve will modulated to maintain heating setpoint and the cooling valve will be modulated to maintain cooling setpoint. The freeze protection pump will operate continuously below 50 degrees outside air temperature.

A low limit thermostat will stop the fan motors, close the outside air damper, start the freeze protection pump and open the heating valve if 38 degree supply air temperature is detected.

The heat recovery pump will operate continuously below 65 degrees and above 75 degrees outside air temperature. The heat recovery coil valve will modulate to maintain minimum 32 degree discharge air temperature at AHU 2.

MSC-P1502
CONTROLLER
SLAVE # 40

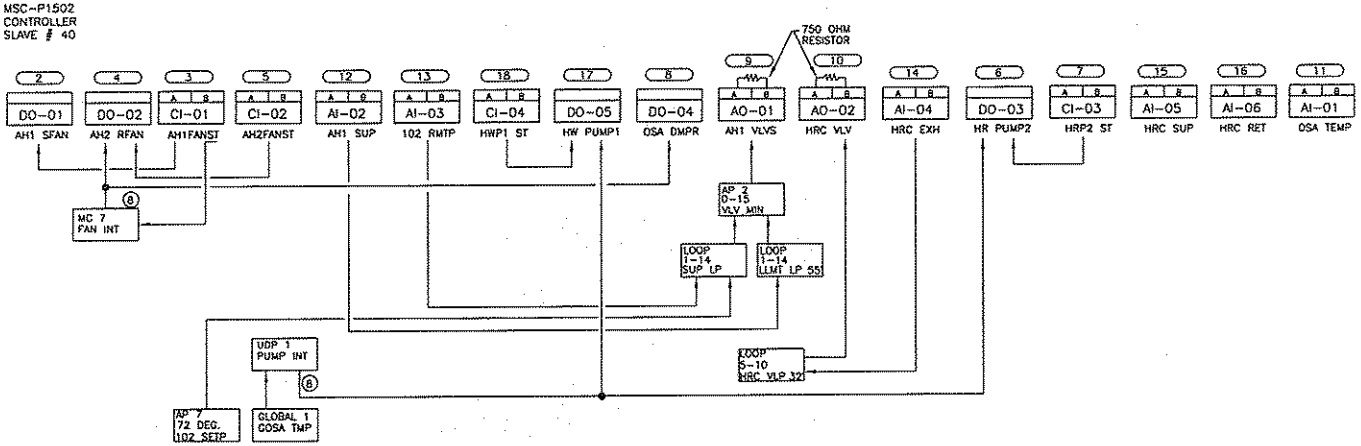

BILL OF MATERIALS

ID	MODEL NUMBER	DESCRIPTION	QTY
CT*	H-800	CURRENT STATUS SWITCH	4
DA-1	MA-7203	DAMPER ACTUATOR	1
FZ-1	T 322	FREEZE STAT	1
	MSC-P1502	PACKAGE UNIT CONTROLLER	1
RIB-*	RIB-U1C	RELAY IN A BOX	4
RS-1	TS-58811-774	ROOM SENSOR W/ OVERRIDE	1
T*	TS-5821-101	IMMERSION TEMPERATURE SENSOR	2
	AT-225	BULB WELL FOR ABOVE	2
TS6-*	TS 5821	DUCT TEMPERATURE SENSOR	2
V-1	VS 9313-247-4-6	3/4" 3-WAY VALVE	2
V-2	VS 9313-247-4-8	1" 3-WAY VALVE	1

AS-BUILT: 9/29/97

PROJECT: FIRE STATION #3 F.A.F.B.	ROBERTSHAW Control Systems Division EAST 3915 MAIN-SPOKANE, WA.		
	TITLE: AHU-1 AND AHU-2		
ARCH: BERNARDO & WILLIS	ENG: D.D.	DWN: D-A-S	CKD:
ENGR: L & S ENGINEERING	APD:	FILE: 96014-2	DATE: 12.17.96
CONTR: RAMSETT MECHANICAL	Sheet 2 of 8	DWG: 965-96014-34	

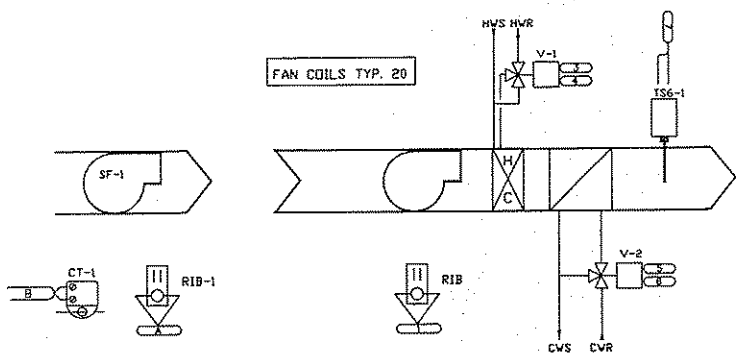

SF-1 IS CONTROLLED BY SLAVE 45 APPARATUS 4 ON SHEET 7. TYPICAL OF 1

TYPICAL FAN COIL

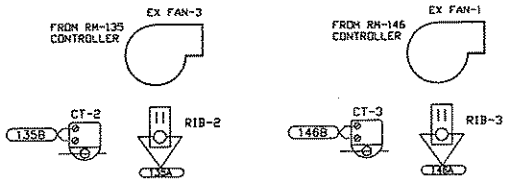

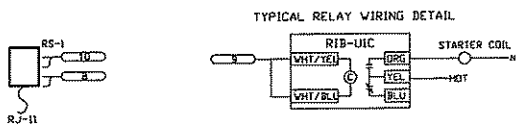

Sequence of operation Fan coils:

Occupied mode: The unit fan will operate continuously. The supply air temperature will be reset based on the space temperature. The minimum supply air temperature will be 60 degrees (or as set). The heating valve will modulate open when the space temperature is below setpoint. The cooling valve will modulate open when the space temperature is above setpoint.

Unoccupied mode: The unit fan will be off. The unit fan will cycle with the heating or cooling valve to maintain unoccupied space setpoint. The override button on the space sensor will restore the unit to the occupied mode for a predetermined time.

Sequence of operation exhaust fan 1 and 3:

The fans will be on during the occupied mode and off during the unoccupied mode.

CONTROL LEVELS
① SCHEDULE
② HOST SCHEDULE
③ START TIME OPTIMIZATION
④ DUTY CYCLE
⑤ STOP TIME OPTIMIZATION
⑥ TEMPERATURE OVERRIDE
⑦ EDL SHED
⑧ SPECIAL 2
⑨ MANUAL
⑩ CONTROL S/S
⑪ OUTSIDE AIR OPTIMIZATION
⑫ SPECIAL 3
⑬ MINIMUM ON/OFF
⑭ EMERGENCY MANUAL
⑮ INTERSTART DELAY
⑯ SPECIAL 4
BG___ GLOBAL BROADCAST

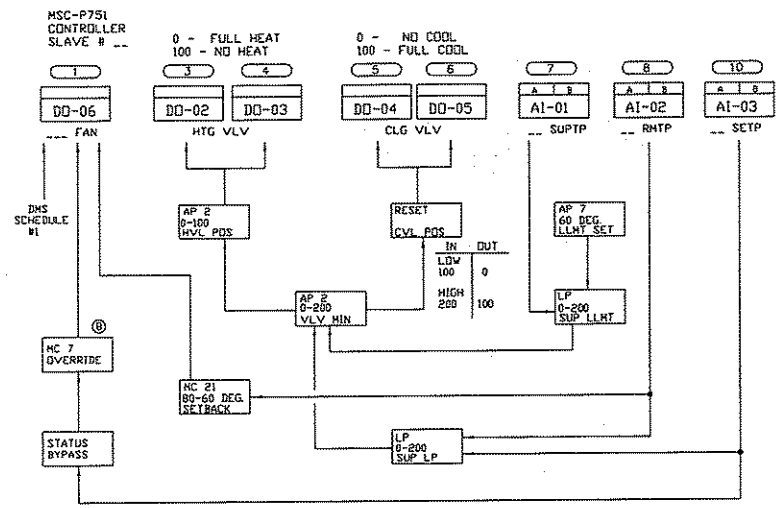

MISC. POINT LOCATION SCHEDULE			
SLAVE	FC-UNIT	POINT ID.	POINT NAME
SLV-41	RM-135	DO-05	EF3 SS
	RM-135	CI-02	EF3 ST
SLV-44	RM-146	DO-05	EF1 SS
	RM-146	CI-02	EF1 ST

BILL OF MATERIALS FOR FAN COILS

ID	MODEL NUMBER	DESCRIPTION	QTY
MSC*	MSC-P-751	PACKAGE UNIT CONTROLLER	20
RS*	TS-58501-772	ROOM SENSOR W/ SETPOINT & RJ-11	20
TS6*	TS-5821	DUCT TEMPERATURE SENSOR 6"	20
V-1	VF-9313-251-4-2	1/2" 3-WAY VALVE HEATING	20
V-2	VF-9313-251-4-2	1/2" 3-WAY VALVE COOLING	19
	VF-9313-251-4-6	1/2" 3-WAY VALVE COOLING FOR FC-19 ONLY	1
RIB*	RB-UIC	RELAY IN A BOX	20

BILL OF MATERIALS MISC.

ID	MODEL NUMBER	DESCRIPTION	QTY
CT*	H-800	CURRENT STATUS SWITCH	3
RIB--*	RB-UIC	RELAY IN A BOX	3

AS-BUILT: 9/29/97

PROJECT: FIRE STATION #3 F.A.F.B.	ROBERTSHAW Control Systems Division EAST 3915 MAIN-SPOKANE, WA.		
	FAN COILS TYPICAL OF 20		
ARCH: BERNARDO & WILLIS	ENG: D.D.	DWN: D-A-S	CKD:
EOR: L &S ENGINEERING	APD:	FILE: 96014-3	DATE: 12.17.96
CONTR: RAMSETT MECHANICAL	Sheet 3 of 8	DWG: 965-96014-34	