STATE	PROJECT	SHEET NUMBER
MT	OMAD 18(41)	K.1

U. S. DEPARTMENT OF TRANSPORTATION
FEDERAL HIGHWAY ADMINISTRATION

Project MT OMAD 18(41)

MONTANA KEY MAP

PLANS FOR PROPOSED PROJECT

MT OMAD 18(41)

MINUTEMAN MISSILE BASE ROADS

FERGUS AND WHEATLAND COUNTIES
MONTANA

BASE SCHEDULE (E-02, L-02, M-06, O-11) LENGTH 8.2 MILES
OPTION A (E-11) LENGTH 4.5 MILES
OPTION B (L-05) LENGTH 7.1 MILES
OPTION C (E-09, N-09) LENGTH 0.6 MILES

INDEX TO SHEETS

K. GENERAL INFORMATION
K.1 TITLE SHEET
K.2 PLAN SYMBOLS AND ABBREVIATIONS
K.3-10 LOCATION MAPS

L. SUMMARIES
L.1-4 SUMMARY OF QUANTITIES

M. TYPICAL SECTIONS
M.1 TABULATION OF QUANTITIES
M.2-3 TYPICAL SECTIONS
M.4-5 TYPICAL DETAILS

N. PLAN-PROFILE
N.1-3 LINE GRAPHS

O. EROSION CONTROL
O.1 EROSION CONTROL PLAN
O.2 STANDARD DRAWING

P. TEMPORARY TRAFFIC CONTROL
P.1 TRAFFIC CONTROL PLAN
P.2 STANDARD DRAWING

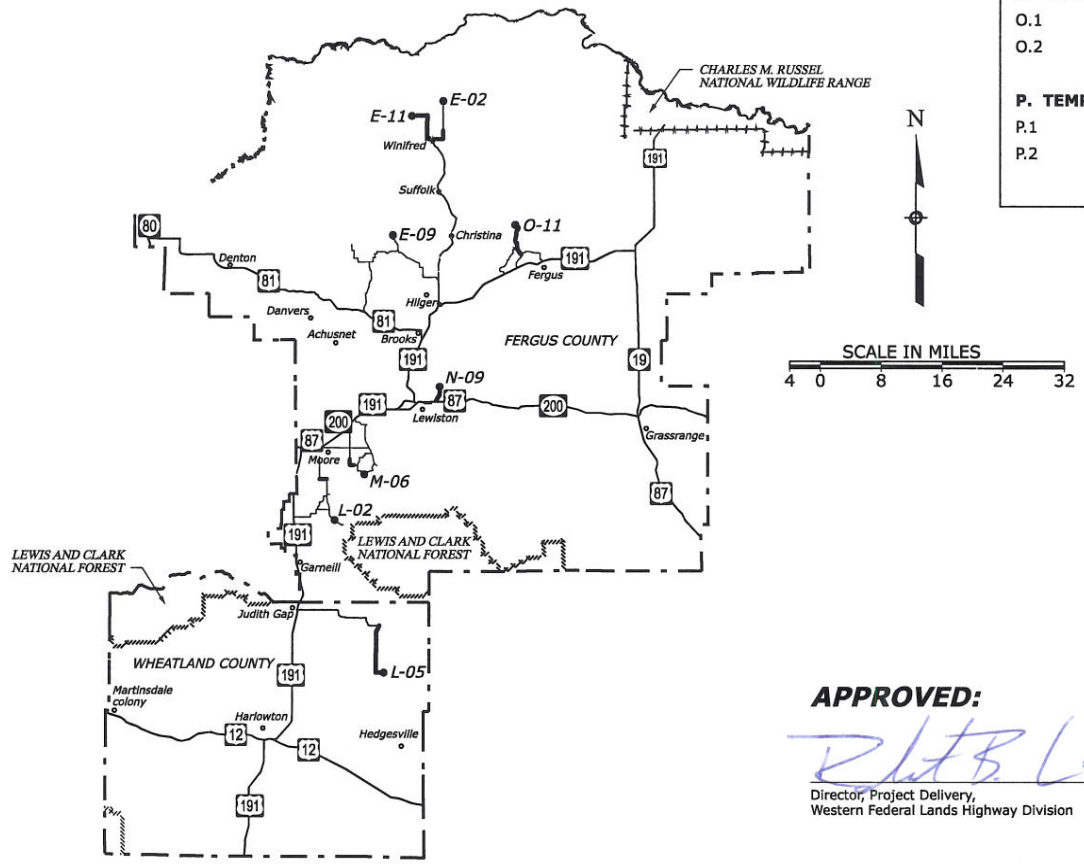

TYPE OF CONSTRUCTION:

Roadway Reconditioning, Aggregate Surfacing, Roadway Stabilization, & Bridge Rehabilitation

FEDERAL LANDS HIGHWAY
COMMITMENT TO EXCELLENCE

PLANS PREPARED BY

U.S. DEPARTMENT OF TRANSPORTATION
FEDERAL HIGHWAY ADMINISTRATION
WESTERN FEDERAL LANDS HIGHWAY DIVISION
VANCOUVER, WASHINGTON

PROJECT MANAGER
G. GIFFORD

APPROVED:

Robert B. Lutz III DATE 3/10/08

Director, Project Delivery,
Western Federal Lands Highway Division

STATE	PROJECT	SHEET NUMBER
MT	OMAD 18(41)	K.2

Δ	total central angle
Δc	curve central angle
Ø	diameter
θs	spiral central angle
abut.	abutment
ADT	average daily traffic
AH	ahead
appr.	approach
BK	back
BM	bench mark
BP	balance point
br.	bridge
brg.	bearing
cc or c. to c.	center to center
℄	centerline
clr.	clear
CMP	corrugated metal pipe
col.	column
conc.	concrete
conn.	connection
constr. jt.	construction joint
cont.	continuous
CS	point of curve to spiral
ctrs.	centers
CUFT	cubic foot (feet)
culv.	culvert
CUYD	cubic yard(s)
D	diameter
DHV	design hourly volume
dia.	diameter
diag.	diagonal
diaph.	diaphragm
dist.	distance
drwg(s).	drawing(s)
E	east
e	superelevation rate
El. 94.16 ft	elevation with number
elev.	elevation
emb.	embankment
EP	edge of pavement
EQ or eq.	equation
ER	edge of road
EW	edge of water
exc.	excavation
exp. jt.	expansion joint
fin.	finish
flg.	flange
ft2	square foot
ft3	cubic foot (feet)
ftg.	footing
ga.	gage (gauge)
galv.	galvanized
hdwl.	headwall
hex.	hexagon
HW	high water
ID	inside diameter
jt.	joint
L	length of curve
lam.	lamination
lat.	latitude
LNFT	linear foot (feet)
long.	longitudinal
LPSM	lump sum
Ls	length of spiral
lt. or LT	left
LW	low water
M.L.	main line
M.P.	mile post
matl.	material
max.	maximum
MGAL	thousand gallon
min.	minimum
mon.	monument
N	north
NC	normal crown
o. c.	on center
o. to o.	out to out
OD	outside diameter
OG	original ground
PC	point of curve
PCC	point of compound curve
PCS	point of curve to spiral
PI	point of intersection
pl.	plate
POC	point on curve
POS	point on spiral
POT	point on tangent
PS	point of tangent to spiral
PSC	point of spiral to curve
PST	point of spiral to tangent
PT	point of tangent
pvmt.	pavement
R	radius
R.	range
R/W	right-of-way
rdwy.	roadway
reinf.	reinforcement
reqd.	required
rt. or RT	right
rte.	route
S	south
SADT	seasonal average daily traffic
SC	point of spiral to curve
sec.	section
shldr.	shoulder
SLRY	slurry unit
spa.	spacing, spaces or spaced
SQFT	square foot
SQYD	square yard
SRS	point of spiral to reverse spiral
SS	point of spiral to spiral (no curve)
ST	point of spiral to tangent
STA, Sta.	station
std.	standard
stgr.	stringer
stiff.	stiffener
struc.	structural
STS	point of spiral to tangent spiral
sym.	symmetrical
T	tangent distance
T.	township
TBM	temporary bench mark
thd.	thread
TS	point of tangent to spiral
Ts	tangent distance (spiraled curve)
typ.	typical
V	design speed
vph	vehicles per hour
VPI	vertical point of intersection
W	west
yd2	square yard
yd3	cubic yard(s)

NOTE:

1. Other symbols used in the plans will be shown in a legend on the appropriate plan sheet.

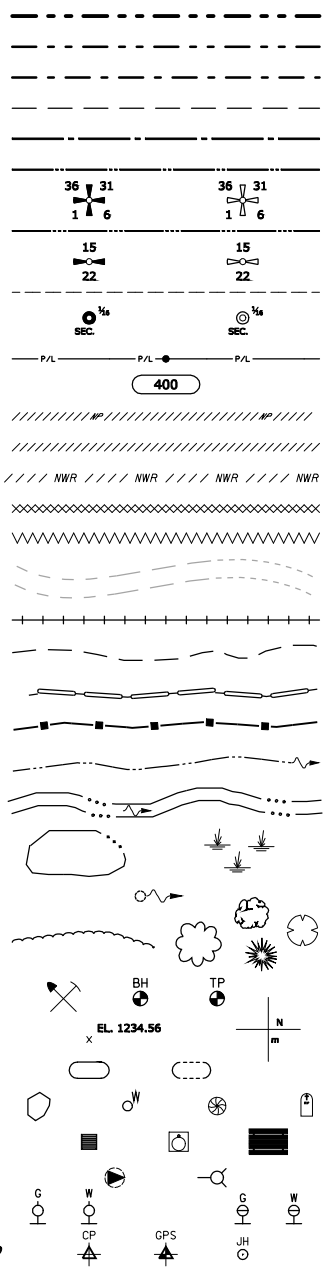

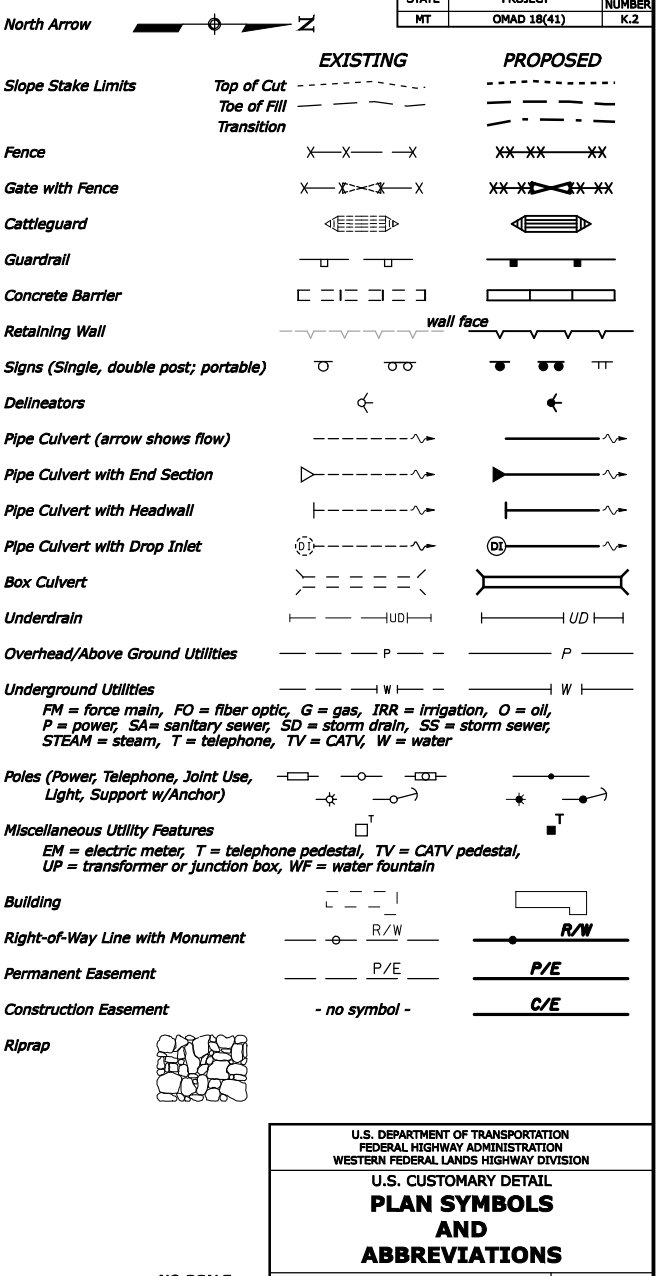

NO SCALE

U.S. DEPARTMENT OF TRANSPORTATION
FEDERAL HIGHWAY ADMINISTRATION
WESTERN FEDERAL LANDS HIGHWAY DIVISION

U.S. CUSTOMARY DETAIL

PLAN SYMBOLS AND ABBREVIATIONS

DETAIL APPROVED FOR USE 11/2001

REVISED: 9/2005 1/2007

DETAIL W101-1

F:\Montana\OMAD1841\Design\E2.dgn [US_Int2D] 11-MAR-2008 9:12AM Designed by: --/---- Checked by: --/----

STATE	PROJECT	SHEET NUMBER
MT	OMAD 18(41)	K.3

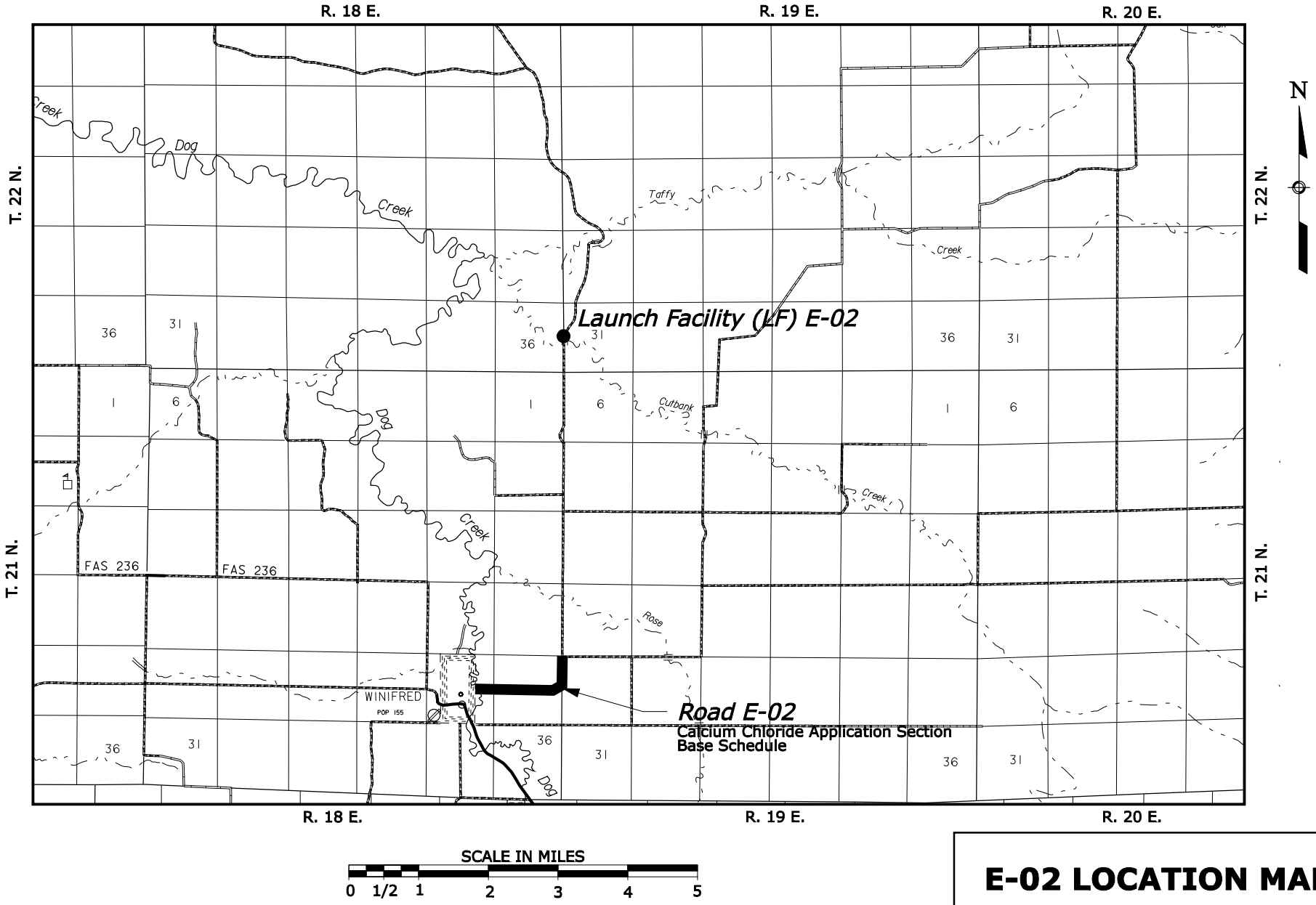

SCALE IN MILES

0 1/2 1 2 3 4 5

E-02 LOCATION MAP
FERGUS COUNTY

F:\Montana\OMAD1841\Design\L2.dgn [US_Int2D] 11-MAR-2008 9:12AM Designed by: --/---- Checked by: --/----

STATE	PROJECT	SHEET NUMBER
MT	OMAD 18(41)	K.4

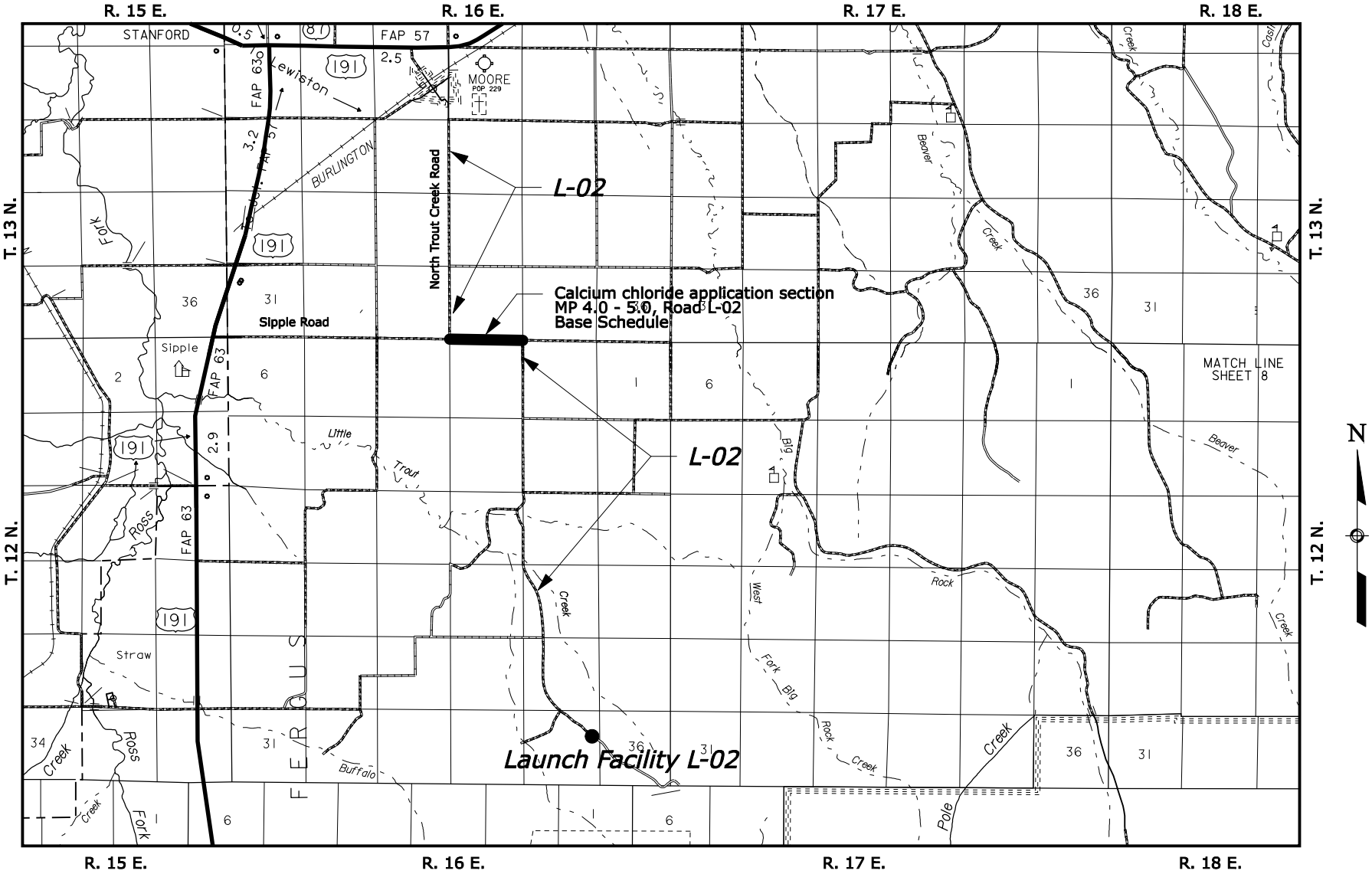

SCALE IN MILES

0 1/2 1 2 3 4 5

L-02 LOCATION MAP
FERGUS COUNTY
MP 4.0 - 5.0

F:\Montana\OMAD1841\Design\M6.dgn [US_Int2D] 11-MAR-2008 9:12AM Designed by: --/---- Checked by: --/----

STATE	PROJECT	SHEET NUMBER
MT	OMAD 18(41)	K.5

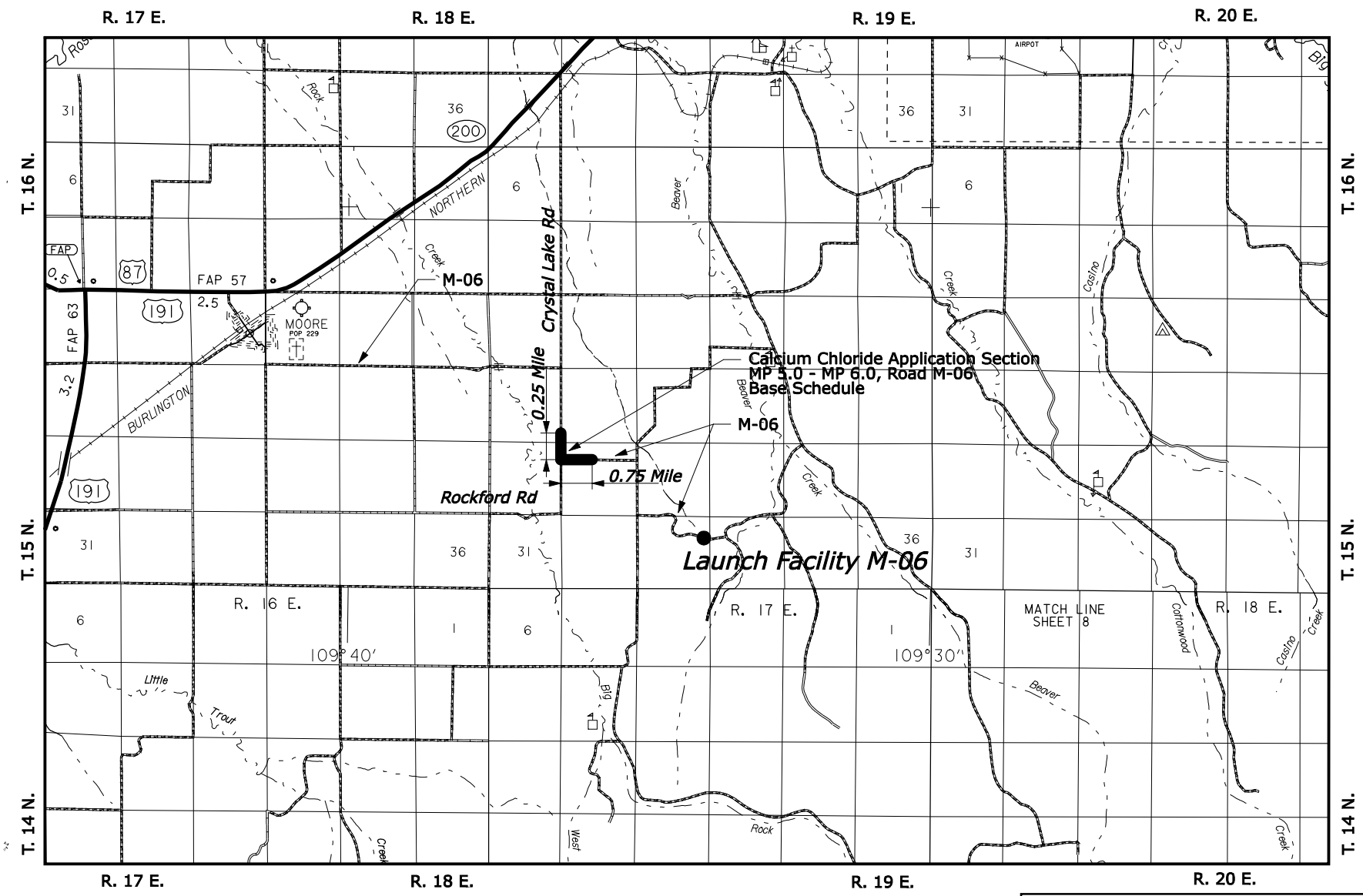

SCALE IN MILES

0 1/2 1 2 3 4 5

M-06 LOCATION MAP
FERGUS COUNTY
MP 5.0-6.0

STATE	PROJECT	SHEET NUMBER
MT	OMAD 18(41)	K.6

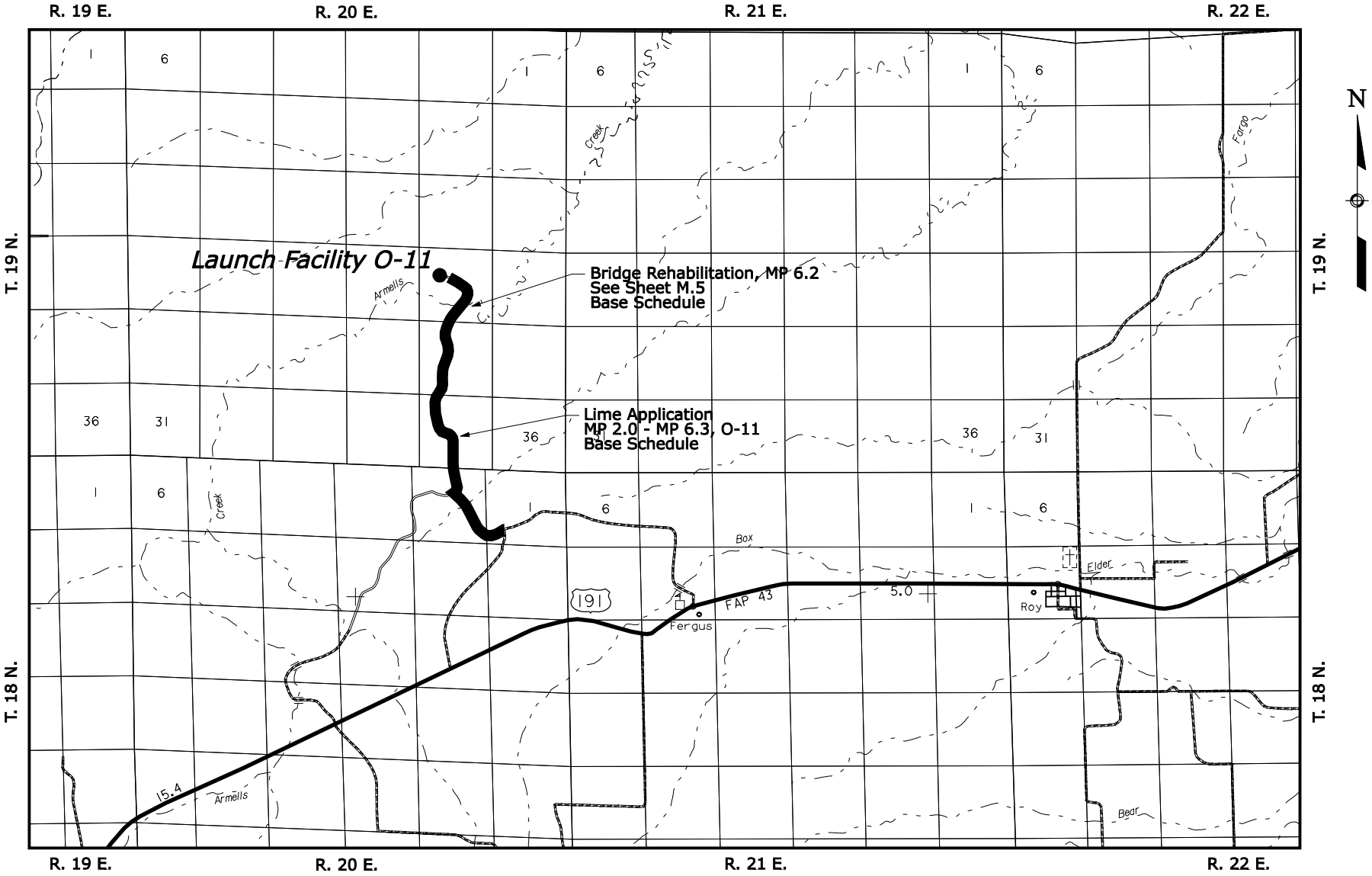

SCALE IN MILES

0 1/2 1 2 3 4 5

0-11 LOCATION MAP
FERGUS COUNTY
MP 2.0 - MP 6.3

F:\Montana\OMAD1841\Design\E11.dgn [US_Int2D] 11-MAR-2008 9:13AM Designed by: --/---- Checked by: --/----

STATE	PROJECT	SHEET NUMBER
MT	OMAD 18(41)	K.7

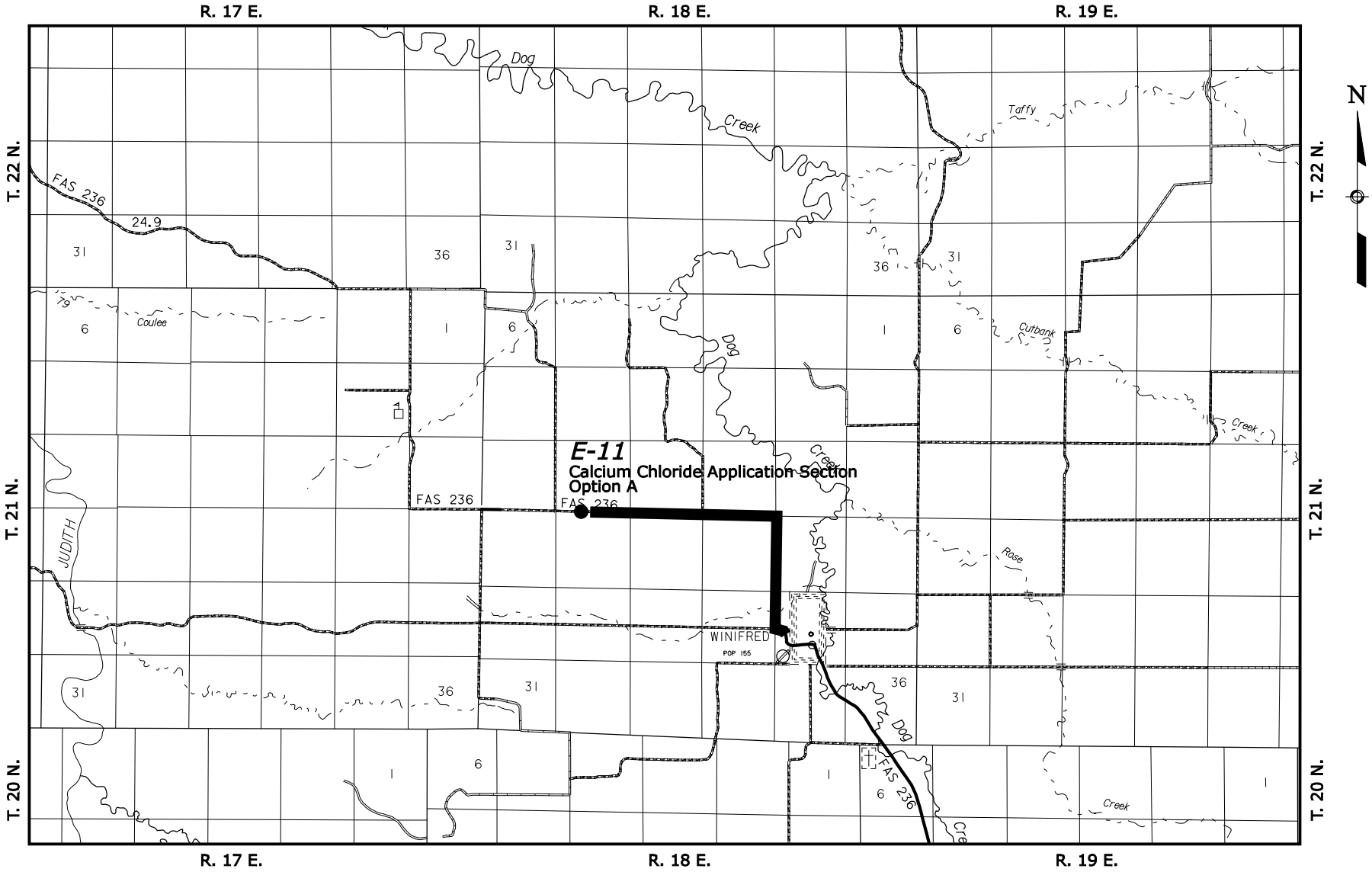

SCALE IN MILES

0 1/2 1 2 3 4 5

E-11 LOCATION MAP
FERGUS COUNTY

F:\Montana\OMAD1841\Design\L5.dgn [US_Int2D] 11-MAR-2008 9:13AM Designed by: --/---- Checked by: --/----

STATE	PROJECT	SHEET NUMBER
MT	OMAD 18(41)	K.8

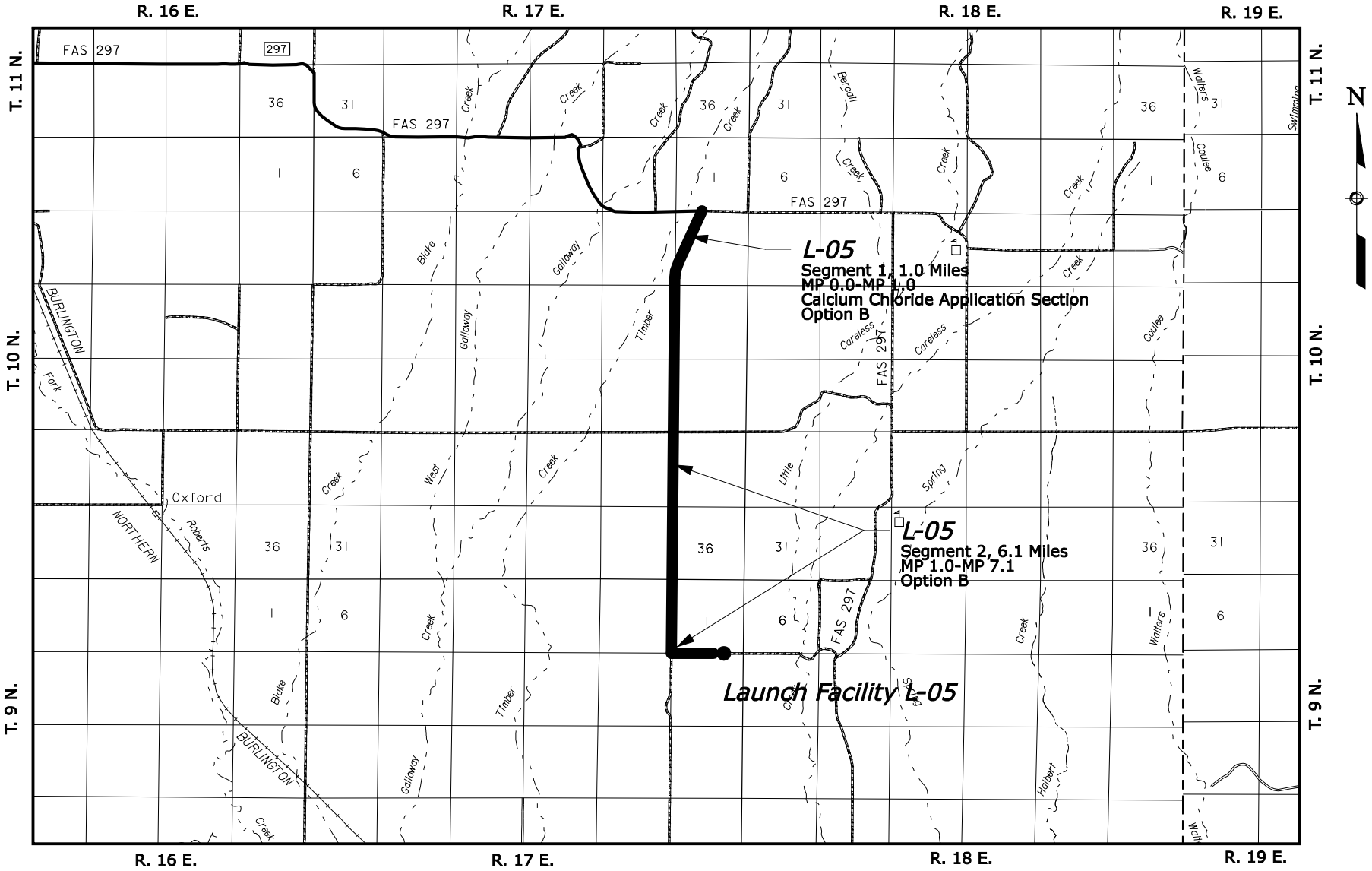

SCALE IN MILES

0 1/2 1 2 3 4 5

L-05 LOCATION MAP
WHEATLAND COUNTY

F:\Montana\OMAD1841\Design\E9.dgn [US_Int2D] 11-MAR-2008 9:13AM Designed by: --/---- Checked by: --/----

STATE	PROJECT	SHEET NUMBER
MT	OMAD 18(41)	K.9

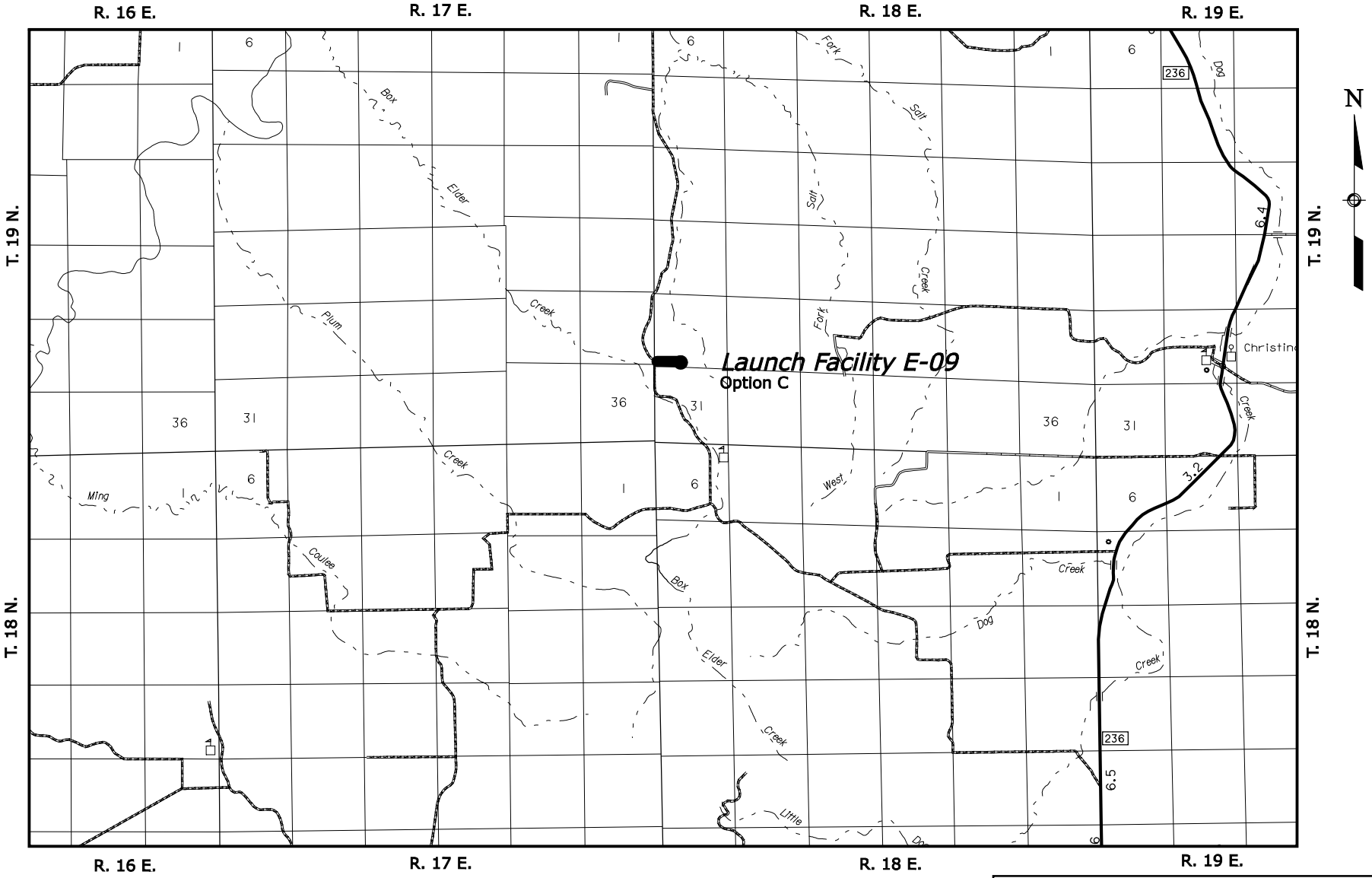

SCALE IN MILES

0 1/2 1 2 3 4 5

E-09 LOCATION MAP
FERGUS COUNTY

F:\Montana\OMAD1841\Design\N9.dgn [US_Int2D] 11-MAR-2008 9:13AM Designed by: --/---- Checked by: --/----

STATE	PROJECT	SHEET NUMBER
MT	OMAD 18(41)	K.10

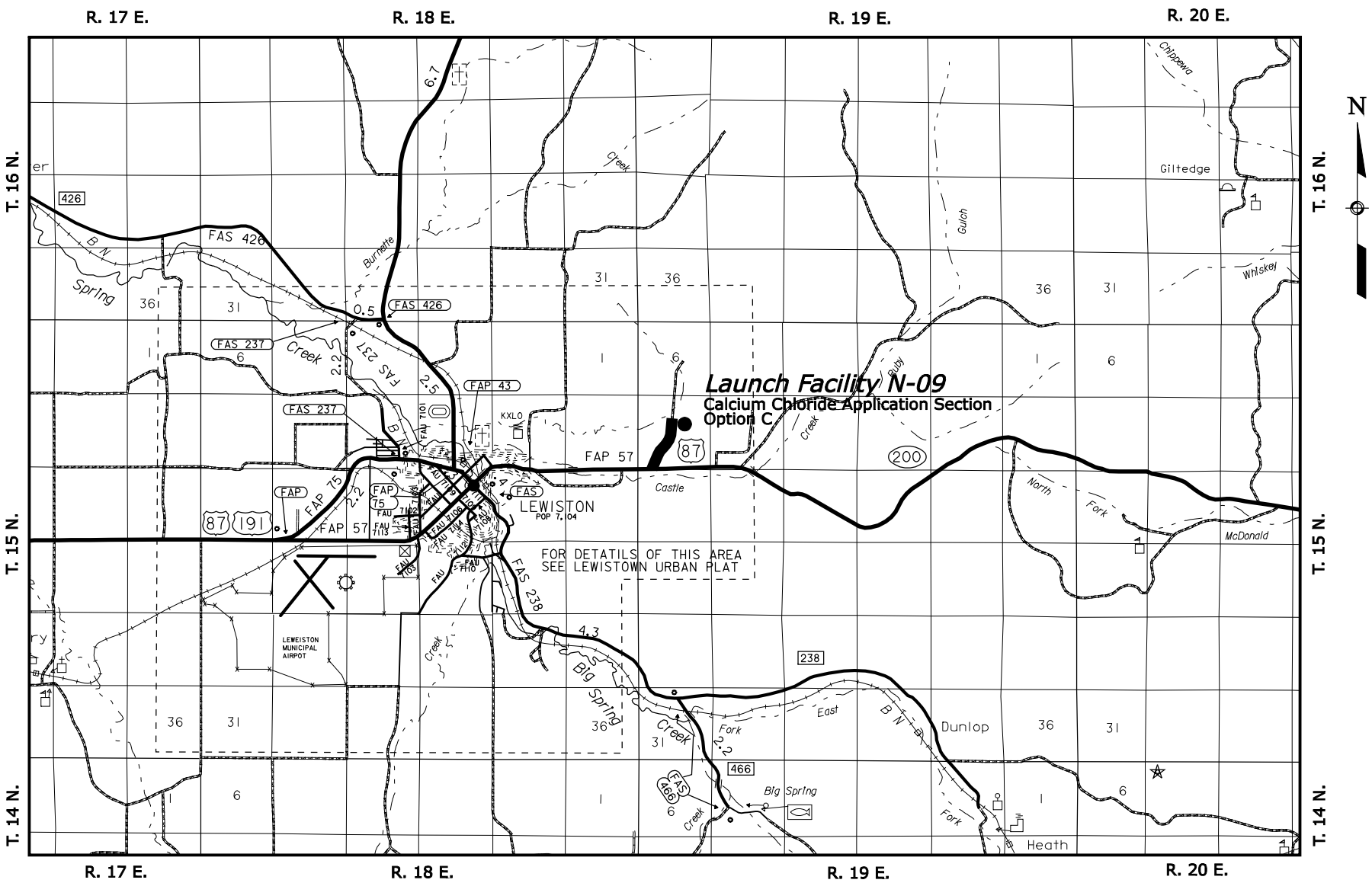

SCALE IN MILES

0 1/2 1 2 3 4 5

N-09 LOCATION MAP
FERGUS COUNTY

SUMMARY OF QUANTITIES

Base Schedule

(E-02, L-02, M-06, O-11)

ITEM	DESCRIPTION	UNIT	Section M Typical Sections	Section O Erosion Control	Section P Temporary Traffic Control											ESTIMATED QUANTITIES PLAN	ESTIMATED QUANTITIES BID SCHEDULE	
	PLAN SHEET SECTION -------->>																	
15101-0000	MOBILIZATION	LPSM														ALL	ALL	
15301-0000	CONTRACTOR QUALITY CONTROL	LPSM														ALL	ALL	
15401-0000	CONTRACTOR TESTING	LPSM														ALL	ALL	
15501-0000	CONSTRUCTION SCHEDULE	LPSM														ALL	ALL	
15705-1500	SOIL EROSION CONTROL, SEDIMENT WATTLE	LNFT		1100												1100	1,100	
15801-0000	WATERING FOR DUST CONTROL	MGAL															1,398	
30202-5010	LIME TREATED AGGREGATE COURSE, 4-INCH DEPTH	SQYD	55500													55500	55,500	
30207-0000	LIME	TON	59													59	59	
30303-3000	ROADWAY RECONDITIONING	SQYD	126972													126972	126,972	
30405-3000	CALCIUM CHLORIDE AGGREGATE STABILIZATION, IN-PLACE AGGREGATE, 3-INCH DEPTH , LOCATION L-02	SQYD	14100													14100	14,100	
30405-3000	CALCIUM CHLORIDE AGGREGATE STABILIZATION, IN-PLACE AGGREGATE, 3-INCH DEPTH , LOCATION M-06	SQYD	14100													14100	14,100	
30410-3000	CALCIUM CHLORIDE AGGREGATE STABILIZATION, IMPORTED SURFACE COURSE AGGREGATE , LOCATION E-02	TON	6360													6360	6,360	
30418-0000	CALCIUM CHLORIDE , LOCATION E-02	TON	126													126	126	
30418-0000	CALCIUM CHLORIDE , LOCATION L-02	TON	50													50	50	
30418-0000	CALCIUM CHLORIDE , LOCATION M-06	TON	50													50	50	
55701-1000	STRUCTURAL TIMBER AND LUMBER, UNTREATED	MFBM	3.0													3.0	3.0	(CQ)
62201-0300	DUMP TRUCK, 12 CUBIC YARD MINIMUM CAPACITY	HOUR															24	
62201-0550	BACKHOE LOADER, 6 CUBIC FOOT MINIMUM RATED CAPACITY BUCKET, 24-INCH WIDTH	HOUR															24	
62201-2050	ROLLER E LOADER, 6 CUBIC FOOT MINIMUM RATED CAPACITY BUCKET, 24-INCH WIDTH	HOUR															10	
62201-2850	MOTOR GRADER, 12 FOOT MINIMUM BLADE	HOUR															21	
63501-0000	TEMPORARY TRAFFIC CONTROL	LPSM														ALL	ALL	
63509-1000	TEMPORARY TRAFFIC CONTROL, FLAGGER	FIX HR RATE			512											512	512	

(CQ) means Contract Quantity

F:\Montana\OMAD1841\Design\[SummaryQuantitybase.xls]L1 29-Feb-2008 4:29 PM Designed by: Ryan Hixson, P.E. 1/2008 Checked by: Karl Gleason, P.E. 2/2008

SUMMARY OF QUANTITIES

Option A

(E-11)

		PLAN SHEET SECTION -------->>	Section M Typical Sections	Section O Erosion Control	Section P Temporary Traffic Control											ESTIMATED QUANTITIES	
ITEM	DESCRIPTION	UNIT														PLAN	BID SCHEDULE
15101-0000	MOBILIZATION	LPSM														ALL	ALL
15301-0000	CONTRACTOR QUALITY CONTROL	LPSM														ALL	ALL
15401-0000	CONTRACTOR TESTING	LPSM														ALL	ALL
15501-0000	CONSTRUCTION SCHEDULE	LPSM														ALL	ALL
15705-1500	SOIL EROSION CONTROL, SEDIMENT WATTLE	LNFT		840												840	840
15801-0000	WATERING FOR DUST CONTROL	MGAL															783
30303-3000	ROADWAY RECONDITIONING	SQYD	72864													72864	72,864
30410-3000	CALCIUM CHLORIDE AGGREGATE STABILIZATION, IMPORTED SURFACE COURSE AGGREGATE , LOCATION E-11	TON	15120													15120	15,120
30418-0000	CALCIUM CHLORIDE , LOCATION E-11	TON	297													297	297
62201-0300	DUMP TRUCK, 12 CUBIC YARD MINIMUM CAPACITY	HOUR															12
62201-0550	BACKHOE LOADER, 6 CUBIC FOOT MINIMUM RATED CAPACITY BUCKET, 24-INCH WIDTH	HOUR															12
62201-2050	ROLLER E LOADER, 6 CUBIC FOOT MINIMUM RATED CAPACITY BUCKET, 24-INCH WIDTH	HOUR															6
62201-2850	MOTOR GRADER, 12 FOOT MINIMUM BLADE	HOUR															12
63501-0000	TEMPORARY TRAFFIC CONTROL	LPSM														ALL	ALL
63509-1000	TEMPORARY TRAFFIC CONTROL, FLAGGER	FIX HR RATE			280											280	280

2/2008 Karl Gleason, P.E.
1/2008 Checked by: Ryan Hixson, P.E.
29-Feb-2008 4:31 PM Designed by:
F:\Montana\OMAD1841\Design\[SummaryQuantityA.xls]L2

SUMMARY OF QUANTITIES

Option B

(L-05)

		PLAN SHEET SECTION -------->>	Section M Typical Sections	Section O Erosion Control	Section P Temporary Traffic Control											ESTIMATED QUANTITIES	
ITEM	DESCRIPTION	UNIT														PLAN	BID SCHEDULE
15101-0000	MOBILIZATION	LPSM														ALL	ALL
15301-0000	CONTRACTOR QUALITY CONTROL	LPSM														ALL	ALL
15401-0000	CONTRACTOR TESTING	LPSM														ALL	ALL
15501-0000	CONSTRUCTION SCHEDULE	LPSM														ALL	ALL
15705-1500	SOIL EROSION CONTROL, SEDIMENT WATTLE	LNFT		450												450	450
15801-0000	WATERING FOR DUST CONTROL	MGAL															1,190
30110-0000	AGGREGATE SURFACE COURSE , GRADING H, LOCATION L-05	TON	18730													18730	18,730
30303-3000	ROADWAY RECONDITIONING	SQYD	105383													105383	105,383
30410-3000	CALCIUM CHLORIDE AGGREGATE STABILIZATION, IMPORTED SURFACE COURSE AGGREGATE , LOCATION L-05	TON	3080													3080	3,080
30418-0000	CALCIUM CHLORIDE , LOCATION L-05	TON	61													61	61
62201-0300	DUMP TRUCK, 12 CUBIC YARD MINIMUM CAPACITY	HOUR															16
62201-0550	BACKHOE LOADER, 6 CUBIC FOOT MINIMUM RATED CAPACITY BUCKET, 24-INCH WIDTH	HOUR															16
62201-2050	ROLLER	HOUR															6
62201-2850	MOTOR GRADER, 12 FOOT MINIMUM BLADE	HOUR															16
63501-0000	TEMPORARY TRAFFIC CONTROL	LPSM														ALL	ALL
63509-1000	TEMPORARY TRAFFIC CONTROL, FLAGGER	FIX HR RATE			440											440	440

1/2008 Karl Gleason, P.E.
1/2008 Checked by: Ryan Hixson, P.E.
29-Feb-2008 4:32 PM Designed by:
F:\Montana\OMAD1841\Design\[SummaryQuantity8.xls]L3

SUMMARY OF QUANTITIES

Option C

(E-09, N-09)

		PLAN SHEET SECTION -------->>	Section M Typical Sections	Section O Erosion Control	Section P Temporary Traffic Control											ESTIMATED QUANTITIES	
ITEM	DESCRIPTION	UNIT														PLAN	BID SCHEDULE
15101-0000	MOBILIZATION	LPSM														ALL	ALL
15301-0000	CONTRACTOR QUALITY CONTROL	LPSM														ALL	ALL
15401-0000	CONTRACTOR TESTING	LPSM														ALL	ALL
15501-0000	CONSTRUCTION SCHEDULE	LPSM														ALL	ALL
15705-1500	SOIL EROSION CONTROL, SEDIMENT WATTLE	LNFT		100												100	100
15801-0000	WATERING FOR DUST CONTROL	MGAL															96
30110-0000	AGGREGATE SURFACE COURSE , GRADING H, LOCATION E-09	TON	690													690	690
30303-3000	ROADWAY RECONDITIONING	SQYD	7893													7893	7,893
30410-3000	CALCIUM CHLORIDE AGGREGATE STABILIZATION, IMPORTED SURFACE COURSE AGGREGATE , LOCATION N-09	TON	970													970	970
30418-0000	CALCIUM CHLORIDE , LOCATION N-09	TON	20													20	20
62201-0300	DUMP TRUCK, 12 CUBIC YARD MINIMUM CAPACITY	HOUR															4
62201-0550	BACKHOE LOADER, 6 CUBIC FOOT MINIMUM RATED CAPACITY BUCKET, 24-INCH WIDTH	HOUR															4
62201-2050	ROLLER	HOUR															2
62201-2850	MOTOR GRADER, 12 FOOT MINIMUM BLADE	HOUR															3
63501-0000	TEMPORARY TRAFFIC CONTROL	LPSM														ALL	ALL
63509-1000	TEMPORARY TRAFFIC CONTROL, FLAGGER	FIX HR RATE			32											32	32

1/2007 Karl Gleason, P.E.
1/2007 Checked by:
Ryan Hixson, P.E.
29-Feb-2008 4:33 PM Designed by:
F:\Montana\OMAD1840\Design\[SummaryQuantityC.xls]L4

ROADWAY QUANTITIES

SCHEDULE OR OPTION	LOCATION	ITEM 15801-0000 WATERING FOR DUST CONTROL (Mgal) 1/	ITEM 30110-0000 AGGREGATE SURFACE COURSE GRADING H (Ton) 2/3/4/	ITEM 30303-3000 ROADWAY RECONDITIONING (SQYD)	ITEM 30410-3000 CALCIUM CHLORIDE AGGREGATE STABILIZATION, IMPORTED SURFACE COURSE AGGREGATE, (TON) 2/3/4/	AVERAGE TOP WIDTH (feet)
Base Schedule	E-02	330	-	30,765	6,360	24.0
Base Schedule	L-02	173	-	16,192	-	24.0
Base Schedule	M-06	173	-	16,192	-	24.0
Base Schedule	O-11	720	-	63,823	-	22.0
Base Schedule	O-11 (Bridge)	2	-	-	-	18.0
TOTAL BASE		**1,398**	**-**	**126,972**	**6,360**	
Option A	E-11	783	-	72,864	15,120	24.0
Option B	L-05	1,190	18,730	105,383	3,080	22.0
Option C	E-09	45	690	3,238	-	16.0
Option C	N-09	51	-	4,655	970	23.0

MILEAGE TABLE

SCHEDULE OR OPTION	ROAD NUMBER	MILES
Base Schedule	E-02	1.9
Base Schedule	L-02	1.0
Base Schedule	M-06	1.0
Base Schedule	O-11	4.3
TOTAL BASE		**8.2**
Option A	E-11	4.5
TOTAL OPTION A		**4.5**
Option B	L-05	7.1
TOTAL OPTION B		**7.1**
Option C	E-09	0.3
Option C	N-09	0.3
TOTAL OPTION C		**0.6**

ITEM 30202-5010 LIME TREATED AGGREGATE COURSE, 4 INCH DEPTH

SCHEDULE OR OPTION	LOCATION (ROAD NUMBER)	QUANTITY (SQYD)
Base Schedule	O-11	55,500

ITEM 30207-0000 LIME

SCHEDULE OR OPTION	LOCATION (ROAD NUMBER)	QUANTITY (TON)
Base Schedule	O-11	59

ITEM 55701-2000 STRUCTURAL TIMBER AND LUMBER

SCHEDULE OR OPTION	LOCATION (ROAD NUMBER)	QUANTITY (MFBM) 6/
Base Schedule	O-11	3.0

ITEM 30405-3000 CALCIUM CHLORIDE AGGREGATE STABILIZATION, IN PLACE AGGREGATE, 3 INCH DEPTH

SCHEDULE OR OPTION	LOCATION (ROAD NUMBER)	QUANTITY (SQYD)
Base Schedule	L-02	14,100
Base Schedule	M-06	14,100

ITEM 30418-0000 CALCIUM CHLORIDE

SCHEDULE OR OPTION	LOCATION (ROAD NUMBER)	QUANTITY (TON) 5/
Base Schedule	E-02	126
Base Schedule	L-02	50
Base Schedule	M-06	50
Option A	E-11	297
Option B	L-05	61
Option C	N-09	20

FOOTNOTE:

1/ Quantities for item 15801-0000 are based on the following:
1. 50 mgal/mile for item 30301-6000 Road Reconditioning
2. 50 mgal/mile for dust control including material source haul road
3. 0.022 mgal/ton for item 30110-0000 Aggregate Surface Course

2/ Aggregate quantity includes material for road approaches.

3/ Aggregate quantity does not include allowance for weight of water added at a stationary mixer for compaction. See Section 158.

4/ Quantities for item 30110-0000 Aggregate Surface Course Grading H and item 30410-3000 calcium chloride aggregate stabilization, imported surface course aggregate are based on 1.86 ton/cubic yard.

5/ Quantities for item 30418-0000 calcium chloride are based on an application rate of 2% by weight of surface course aggregate at 141 lb/cubic foot and 94% purity.

6/ Contract quantity.

TABULATION OF QUANTITIES

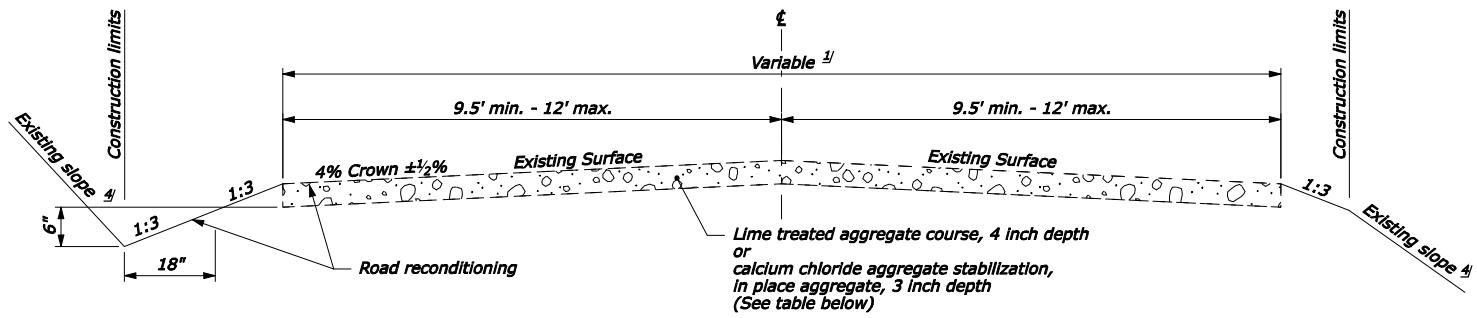

TYPICAL SECTION ON TANGENTS
ROAD STABILIZATION, IN PLACE AGGREGATE 5/

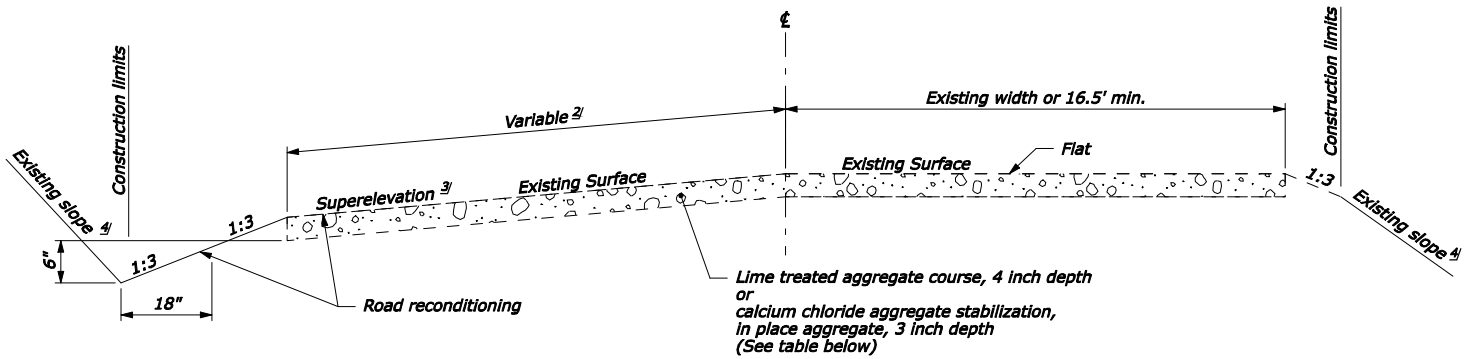

TYPICAL SECTION ON CURVES
ROAD STABILIZATION, IN PLACE AGGREGATE 5/

TREATMENT LOCATION AND METHOD

SCHEDULE OR OPTION	LOCATION (ROAD NUMBER)	ROAD STABILIZATION TREATMENT METHOD
Base Schedule	E-02	Calcium Chloride Aggregate Stabilization, In Place Aggregate
Base Schedule	L-02	Calcium Chloride Aggregate Stabilization, In Place Aggregate
Base Schedule	M-06	Calcium Chloride Aggregate Stabilization, In Place Aggregate
Base Schedule	0-11	Lime Treated Aggregate Course

FOOTNOTE:

1/ Match existing width up to 24 feet maximum.

2/ Match existing width.

3/ Match existing superelevation, not to exceed 10%.

4/ Do not disturb existing slopes unless directed by the CO.

5/ Depth of mixing dependent upon treatment method.

TYPICAL SECTIONS

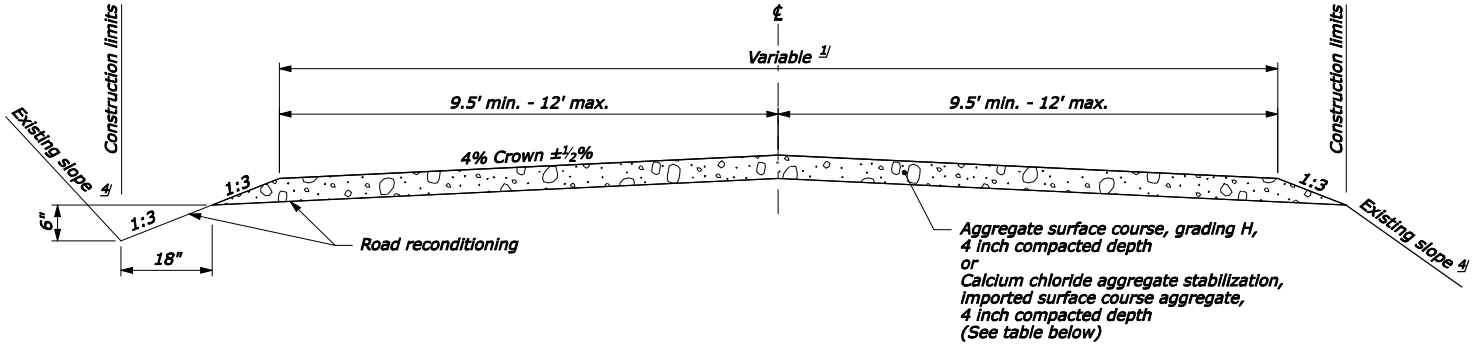

TYPICAL SECTION ON TANGENTS
IMPORTED AGGREGATE SURFACE

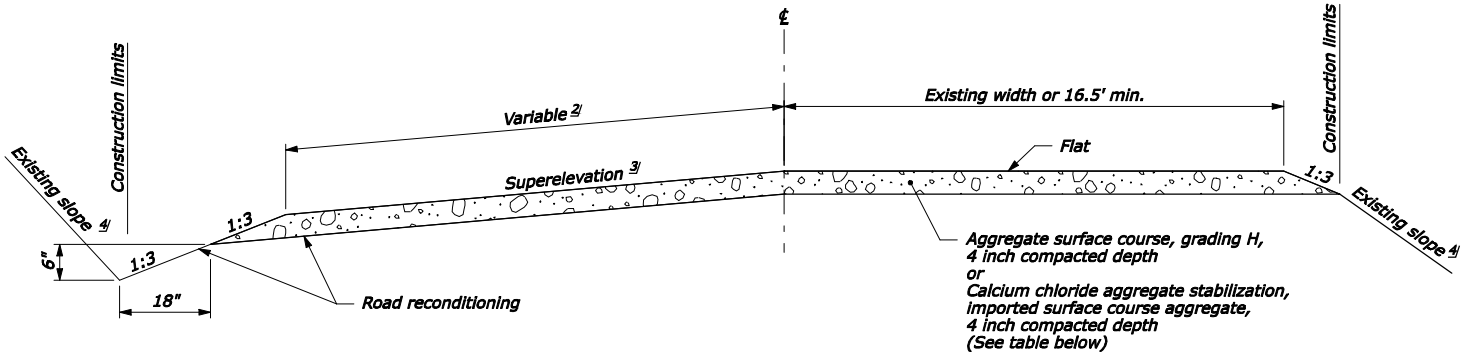

TYPICAL SECTION ON CURVES
IMPORTED AGGREGATE SURFACE

SURFACE COURSE LOCATION AND TYPE

SCHEDULE OR OPTION	LOCATION (ROAD NUMBER)	SURFACE COURSE TYPE
Option A	E-11	Calcium Chloride Aggregate Stabilization, Imported Surface Course Aggregate
Option B	L-05 MP 0.0-1.0	Calcium Chloride Aggregate Stabilization, Imported Surface Course Aggregate
Option B	L-05 MP 1.0-7.1	Aggregate surface course, grading H
Option C	E-09	Aggregate surface course, grading H
Option C	N-09	Calcium Chloride Aggregate Stabilization, Imported Surface Course Aggregate

FOOTNOTE:

1/ Match existing width up to 24 feet maximum.
Taper at a rate of 25:1 between widths. See sheet M.4.

2/ Match existing width.

3/ Match existing superelevation, not to exceed 10%.

4/ Do not disturb existing slopes unless directed by the CO.

TYPICAL SECTIONS

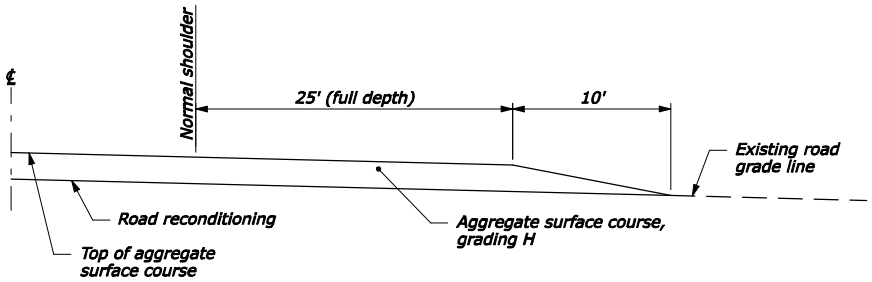

TYPICAL TREATMENT AT EXISTING GRAVEL PUBLIC ROADS OR MISSILE SITE APPROACH ROADS

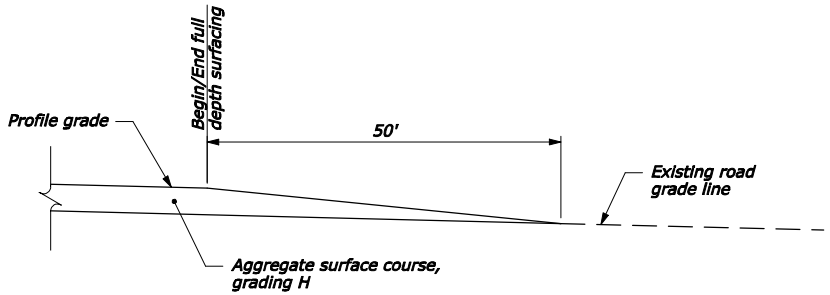

TYPICAL TREATMENT OF GRAVEL SECTIONS AT THE BEGINNING AND END OF CONNECTION WITH NONPAVED ROADWAYS

(PROFILE VIEW)

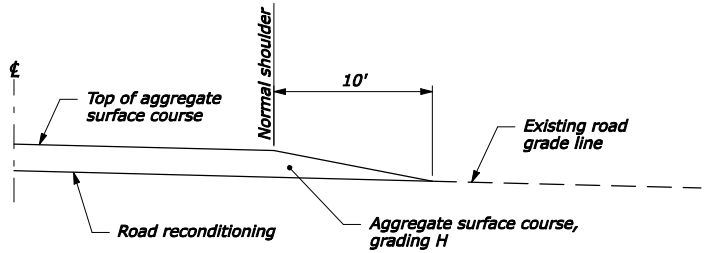

TYPICAL TREATMENT AT EXISTING PRIVATE APPROACH ROADS

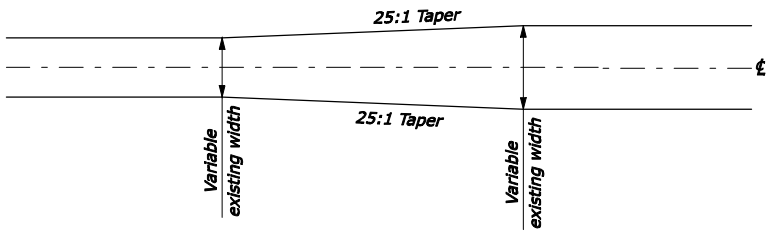

TYPICAL TAPER

(PLAN VIEW)

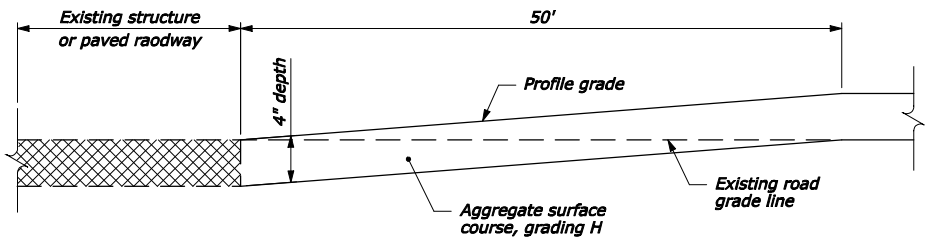

TYPICAL TREATMENT AT EXISTING CATTLEGUARDS, BRIDGES, RAILROAD CROSSINGS & PAVED INTERSECTIONS

(PROFILE VIEW)

NOTE:

1. Excavate existing gravel surfacing from the edge of intersecting roadway or from the structure. Taper profile grade from existing grade to the depth shown. Excavation and disposal of gravel surfacing will not be measured.

TYPICAL DETAILS

STATE	PROJECT	SHEET NUMBER
MT	OMAD 18 (41)	M.5

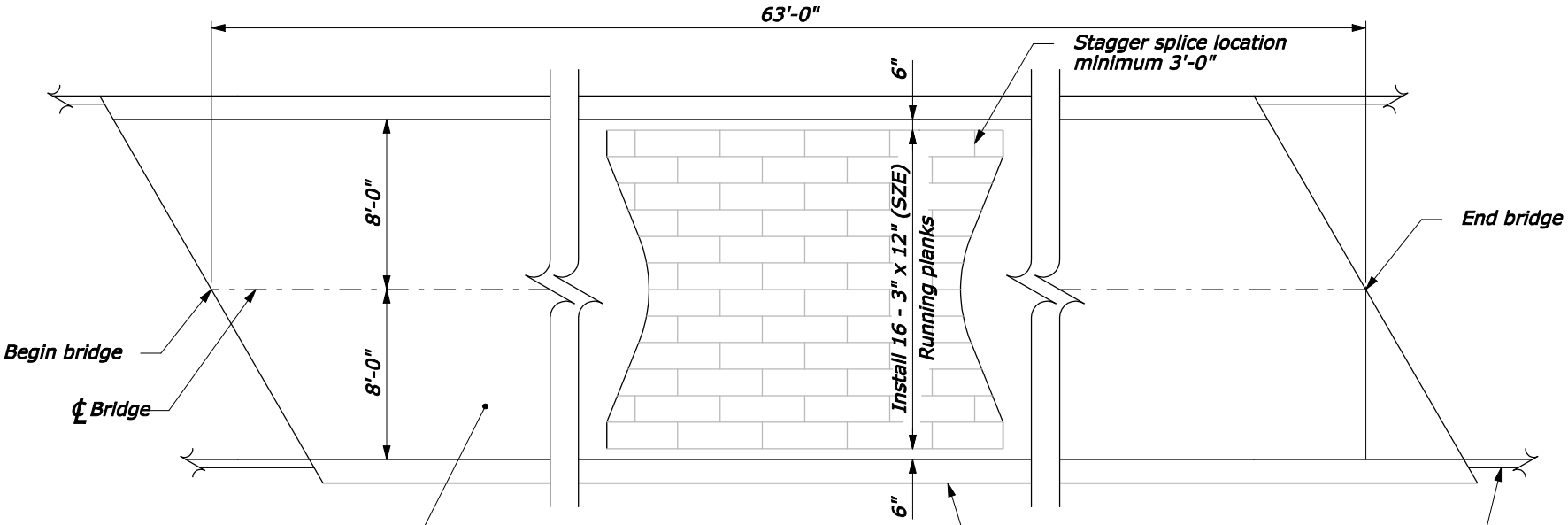

PLAN
Existing Bridge
Scale: 1" = 8'-0"
(A4 Sheet Size)

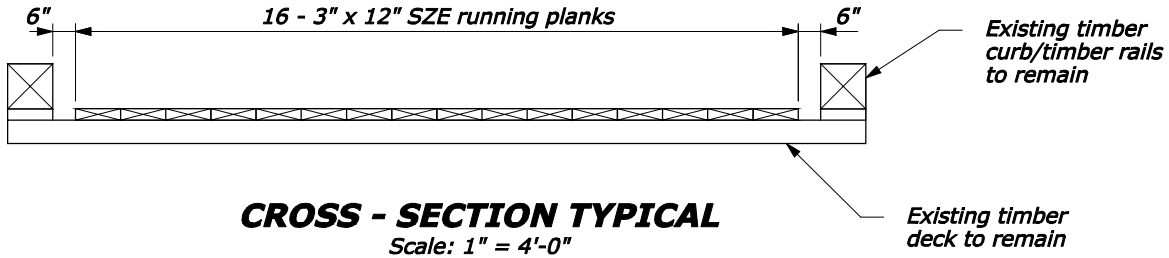

CROSS - SECTION TYPICAL
Scale: 1" = 4'-0"
(A4 Sheet Size)

NOTE:

1. Running planks timber shall be untreated Douglas Fir 3 x 12 (nominal) S2E (coast region) and shall be no. 1 or better, graded according to the Western Wood Products Association.
2. Nail 3" x 12" running plank to existing timber deck with rows of 60d ring shanks (galvanized, each plank at 2'-0" center, each row, staggered).
3. Minimum length of running plank is 8'-0".
4. Pre-level existing surface with cold asphalt mix. Place according to Section 417.
5. Match adjusted bridge wearing surface grade with existing roadway material.

FOOTNOTE:

1/ Contract quantity.

Engineering Estimates:

- Sawn timber 3" x 12" (nominal) = 3.0 MFBM 1/

BRIDGE REHABILITATION TYPICAL DETAIL

STATE	PROJECT	SHEET NUMBER
MT	OMAD 18(41)	N.1

CALCIUM CHLORIDE AGGREGATE STABILIZATION, IN PLACE AGGREGATE

SCHEDULE OR OPTION	LOCATION (ROAD NUMBER)	MILE POST (MP)	APPLICATION RATE
Base Schedule	L-02	4.0-5.0	6.4 lb/SQYD
Base Schedule	M-06	5.0-6.0	6.4 lb/SQYD

L-02 & M-06 LINE GRAPH

STATE	PROJECT	SHEET NUMBER
MT	OMAD 18(41)	N.2

LIME TREATED AGGREGATE COURSE, 4 INCH DEPTH

SCHEDULE OR OPTION	LOCATION (ROAD NUMBER)	MILE POST (MP)	APPLICATION RATE
Base Schedule	O-11	2.0-6.3	2.1 lb/SQYD

O-11 LINE GRAPH

F:\Montana\OMAD1841\Design\O11_LineGraph.dgn (US_Jm20) 11-MAR-2008 9:14AM Designed by: --/---- Checked by: --/----

L-05 LINE GRAPH

MP 0.0
BEGIN ROAD L-05
Intersection of Highwy 297
and Living Springs Road
Begin calcium chloride
aggregate stabilization,
imported surface course aggregate

MP 0.0
MP 0.25
MP 0.50
MP 0.75

MP 1.0

MP 1.0
End calcium chloride
aggregate stabilization,
imported suface course aggregate
Begin aggregate surface
course, grading H

MP 1.25
MP 1.50

MP 1.7
Beginning of
Environmentally Sensitive Area
Do Not Disturb
See Subsection 107.10(d)

MP 1.75

MP 2.0

MP 2.25
MP 2.50
MP 2.75

MP 3.0

MP 3.1
Intersection of Living Springs Road
and Judith Gap Road

MP 3.25

MP 3.50
MP 3.75

MP 4.0

MP 4.1
Historic Structures
Do Not Disturb
See Subsection 107.10(d)

MP 4.25
MP 4.50
MP 4.75

MP 5.0

MP 5.25

MP 2.1
End of
Environmentally Sensitive Area
Do Not Disturb
See Subsection 107.10(d)

MP 5.50
MP 5.75

MP 6.0

MP 6.1
Intersection of
Living Springs Road
and Lammer Road

MP 6.25

MP 6.50
MP 6.75

MP 7.0

MP 7.1
END ROAD L-05

MP 7.25

STATE	PROJECT	SHEET NUMBER
MT	OMAD 18(41)	N.3

STATE	PROJECT	SHEET NUMBER
MT	OMAD 18(41)	0.1

EROSION CONTROL QUANTITIES

SCHEDULE OR OPTION	LOCATION (ROAD NUMBER)	ITEM 15705-1500 SOIL EROSION CONTROL SEDIMENT WATTLE (Each) 1/ 2/
Base Schedule	E-02	264
Base Schedule	L-02	60
Base Schedule	M-06	64
Base Schedule	O-11	512
Base Schedule	O-11 (Bridge)	200
TOTAL BASE		**1100**
Option A	E-11	840
Option B	L-05	450
Option C	E-09	50
Option C	N-09	50

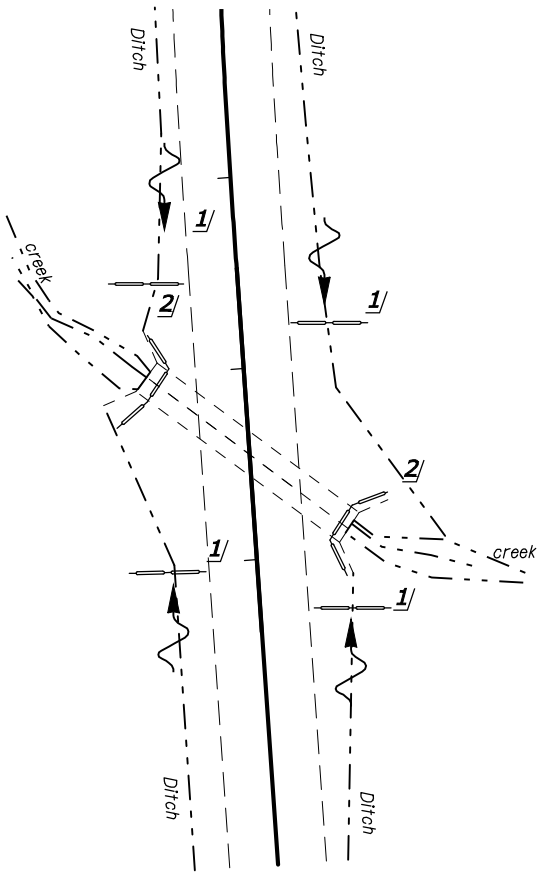

TYPICAL
SEDIMENT WATTLE PLACEMENT

FOOTNOTE:

1/ Place sediment wattles in ditches intersecting culverts and bridges with standing or flowing water - see Sediment Wattle sheet for details.

2/ Place sediment wattle around culverts with standing or flowing water.

EROSION CONTROL PLAN

F:\Montana\OMAD(41)\Design\ErosionCntlPlan.dgn (US_ft20) 11-MAR-2008 9:14AM Designed by: --/---- Checked by: --/----

STATE	PROJECT	SHEET NUMBER
MT	OMAD 18(41)	O.2

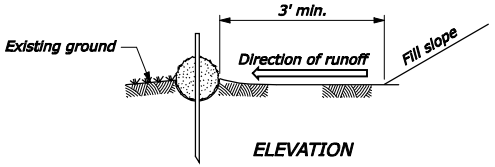

ELEVATION

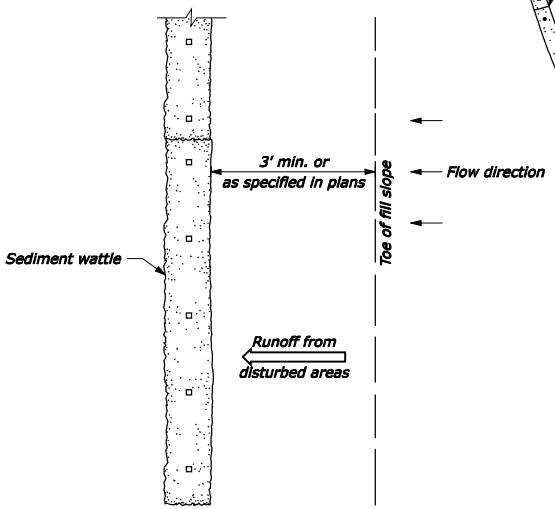

PLAN

INSTALLATION BEYOND TOE OF SLOPE

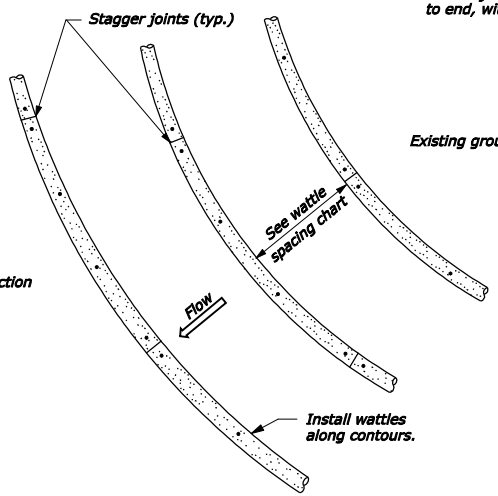

INSTALLATION ALONG SLOPES

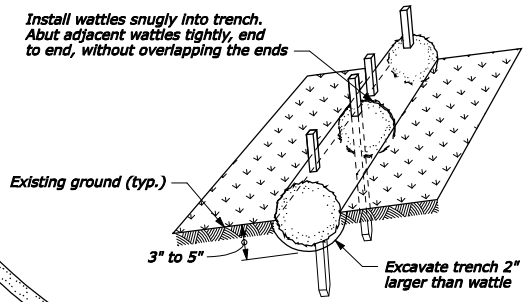

Step 1: Excavate trench and install wattles

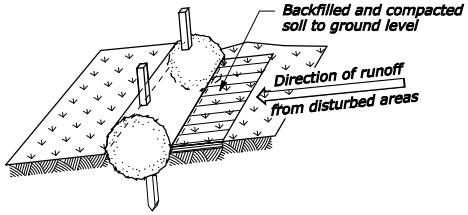

Step 2: Backfill soil against wattles

PROPERLY STAKED AND ENTRENCHED WATTLE

NOTE:

1. Drive stakes at each end and at 4' spacing until wattle is secure to slope. Do not crush wattle while staking. Live stakes may be used for permanent installations.
2. Use drainage ditch installation only in low flow conditions.

STAKES REQUIRED	
Wattle length (ft)	Stakes required for each wattle
25	8
20	6
12	4

WATTLE SPACING	
Slope	Spacing (ft)
1:4 or flatter	40
1:3	30
1:2	20
1:1	10

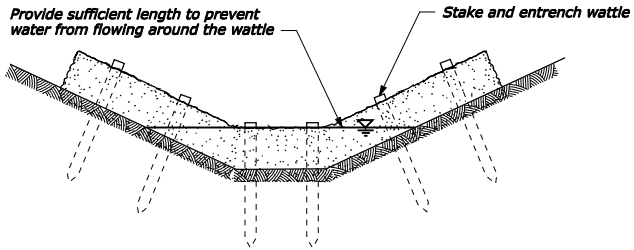

ELEVATION

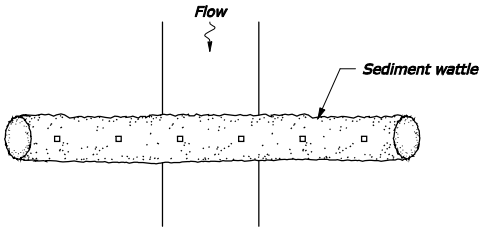

PLAN

DRAINAGE DITCH INSTALLATION

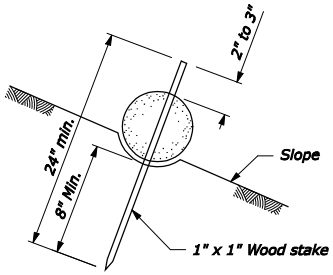

WATTLE STAKING DETAIL

NO SCALE

U.S. DEPARTMENT OF TRANSPORTATION
FEDERAL HIGHWAY ADMINISTRATION
WESTERN FEDERAL LANDS HIGHWAY DIVISION

U.S. CUSTOMARY DETAIL

SEDIMENT WATTLE

DETAIL APPROVED FOR USE 9/2007

REVISED:

DETAIL W157-20

STATE	PROJECT	SHEET NUMBER
MT	OMAD 18(40)	P.1

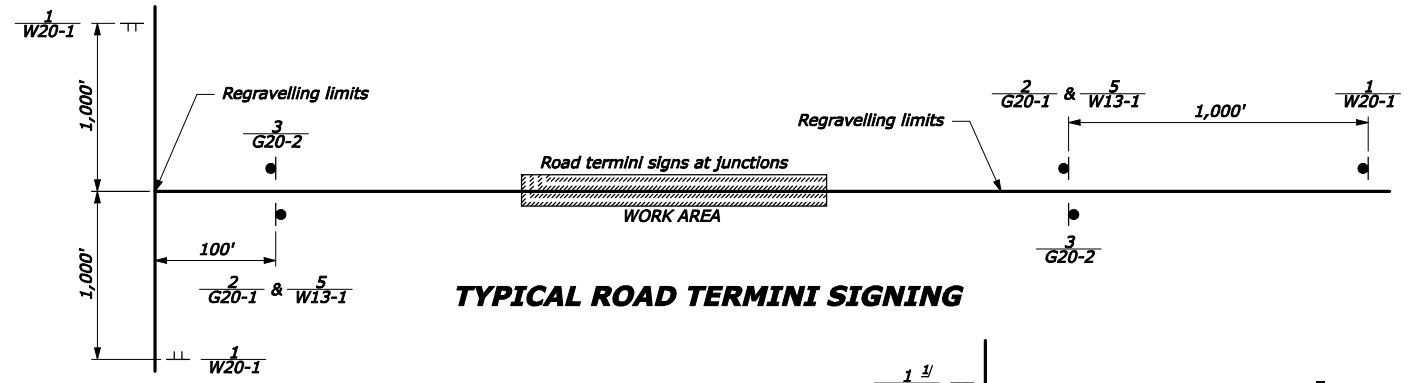

TYPICAL ROAD TERMINI SIGNING

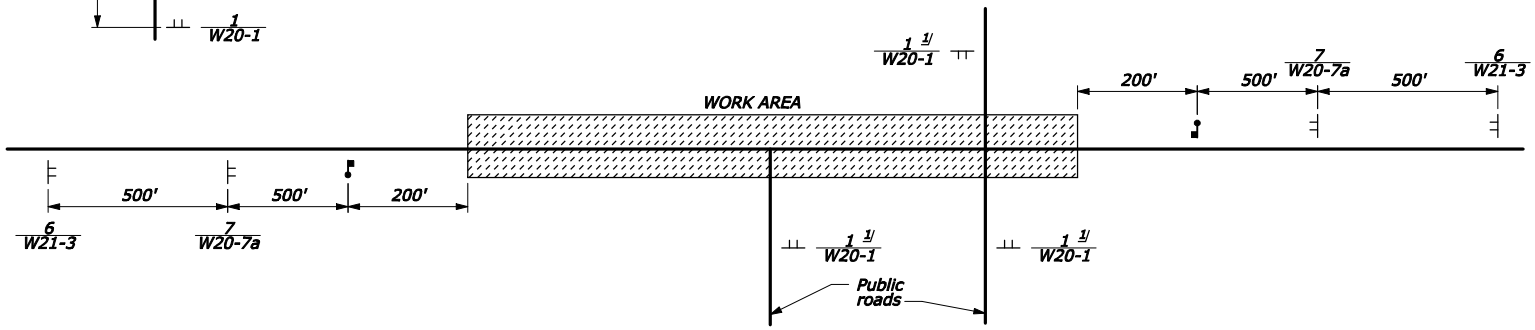

TYPICAL WORK AREA SIGNING

LEGEND:

- Flagger Location
- Post Mounted Sign
- Portable Sign
- 1 W20-1 — Plan Number / MUTCD Number

CONSTRUCTION SIGNS PER WORK AREA 4/

PLAN NUMBER	MUTCD MANUAL NO.	LEGEND	SIGN SIZE (in)	NUMBER OF SIGNS	QUANTITY (sq. ft)
1	W20-1	ROAD WORK AHEAD	36 x 36	6	54
2	G20-1	ROAD WORK NEXT * MILES	36 x 18	2	9
3	G20-2	END ROAD WORK	36 x 18	2	9
4 2/ 3/	W8-6	TRUCK CROSSING	30 x 30	2	12.5
5	W13-1	20 MPH	24 x 24	2	4.5
6	W21-3	ROAD MACHINERY AHEAD	36 x 36	2	18
7	W20-7a	FLAGGER SYMBOL	36 x 36	2	18
Total (Base Schedule and All Options)					167
*	See Mileage Table on sheet M.1, round distance to nearest mile.				

MINIMUM TEMPORARY TRAFFIC CONTROL PER WORK AREA 4/

DESCRIPTION	QUANTITY
CONSTRUCTION SIGNS	167 sq. ft
BARRICADE, TYPE 1	5 each 3/
CONE, TYPE 28 in	25 each 3/
WARNING LIGHT, TYPE A	5 each 3/

TEMPORARY TRAFFIC CONTROL

ITEM	DESCRIPTION	QUANTITY
63501-0000	TEMPORARY TRAFFIC CONTROL	LUMP SUM (base schedule and all options)
63509-1000	FLAGGER	512 fixed hourly rate - Base Schedule
		280 fixed hourly rate - Option A
		440 fixed hourly rate - Option B
		32 fixed hourly rate - Option C

NOTE:

1. Signing shown is the minimum required for one job site and one work area. Sign all active job sites and work areas. Adjust the number of signs as necessary.
2. See Sheet P.2, Construction Sign Installation Detail W635-20 for sign details.

FOOTNOTE:

1/ Use sign no. 1 (W20-1) at public road crossings.

2/ Use at junction with material source roads.

3/ Location not shown on the plans; use as directed by the CO.

4/ Information only.

TRAFFIC CONTROL PLAN

STATE	PROJECT	SHEET NUMBER
MT	OMAD 18(41)	P.2

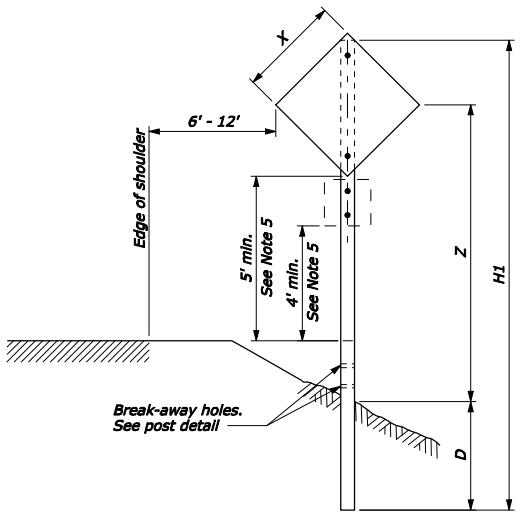

SINGLE POST SIGN

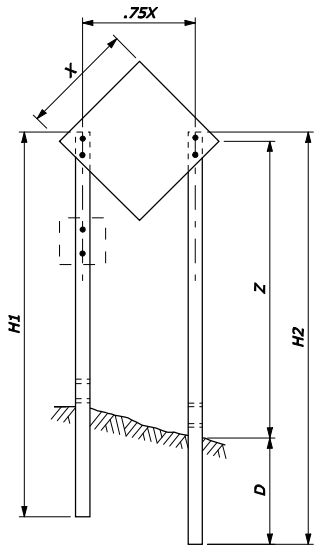

TWO POST SIGN

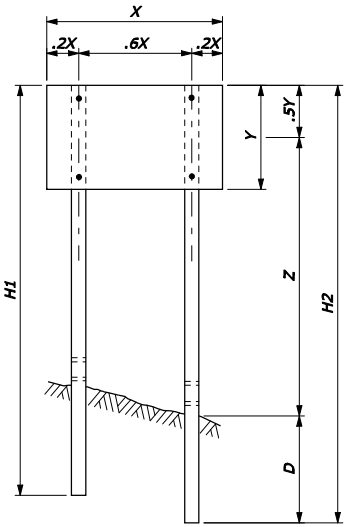

NOTE:

1. Attach sign panels with a minimum of 2 - ¼" dia. bolts per post.
2. Mount signs smaller than listed on a single 4" x 4" post. For signs not shown, use next largest size.
3. H1 and H2 = Overall post length. Select post lengths to fit field conditions.
4. D = Post embedment depth for average soil conditions.
5. When pedestrians are present, or in areas where the view obstructed, use 7' minimum mounting height.

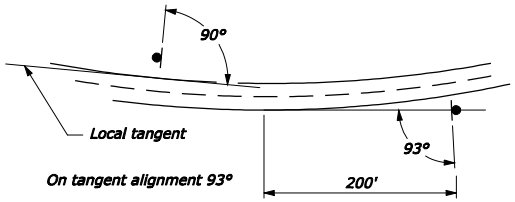

SIGN INSTALLATION ANGLE

WOOD POST SELECTION TABLE

SIGN SHAPE	X x Y	GROUNDLINE TO CENTER OF SIGN HEIGHT (Z)									
		Z IS 10' OR LESS					Z IS GREATER THAN 10'				
		NUMBER OF POSTS	POST SIZE	D	HOLE SIZE	NOTCH DEPTH	NUMBER OF POSTS	POST SIZE	D	HOLE SIZE	NOTCH DEPTH
◇ ⬡	30" x 30"	1	4" x 4"	36"	0	0	1 or 2	4" x 6" 4" x 4"	48" 36"	1½" 0	0 0
◇ ⬡ ◯	36" x 36"	1 or 2	4" x 6" 4" x 4"	48" 36"	1½" 0	0 0	1 or 2	4" x 6" 4" x 4"	48" 36"	1½" 0	0 0
◇ ⬡	48" x 48"	1	4" x 6"	48"	1½"	0	1 or 2	6" x 8" 4" x 6"	48" 48"	3" 1½"	0 1¾"
▭	60" x 30"	2	4" x 4"	36"	0	0	2	4" x 6"	48"	1½"	1¾"
▭	78" x 42"	2	4" x 6"	48"	1½"	1¾"	2	4" x 6"	48"	1½"	1¾"
▭	96" x 48"	2	4" x 6"	48"	1½"	1¾"	2	6" x 8"	48"	3"	2¼"

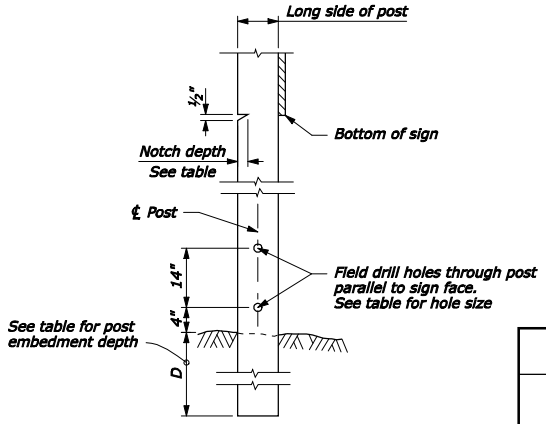

POST DETAIL

NO SCALE

U.S. DEPARTMENT OF TRANSPORTATION
FEDERAL HIGHWAY ADMINISTRATION
WESTERN FEDERAL LANDS HIGHWAY DIVISION

U.S. CUSTOMARY DETAIL

CONSTRUCTION SIGN INSTALLATION WOOD POSTS

DETAIL APPROVED FOR USE 12/2008

REVISED:

DETAIL W635-20