NPS NO.	REG	STATE	PROJECT	SHEET NO.	TOTAL SHEETS
304 / 41,920	SE	TN	TEA-21 SHIL 502(3)	A-1	152

U.S. DEPARTMENT OF THE INTERIOR
NATIONAL PARK SERVICE

SHILOH NATIONAL MILITARY PARK

PLANS FOR PROPOSED

PROJECT TEA-21 SHIL 502(3)

REHABILITATION OF ROADWAYS, BRIDGE REPLACEMENT AT TILGHMAN BRANCH, INTERSECTION IMPROVEMENTS, AND OTHER MISCELLANEOUS WORK

HARDIN COUNTY
TENNESSEE

PROJECT TEA-21 SHIL 502(3)

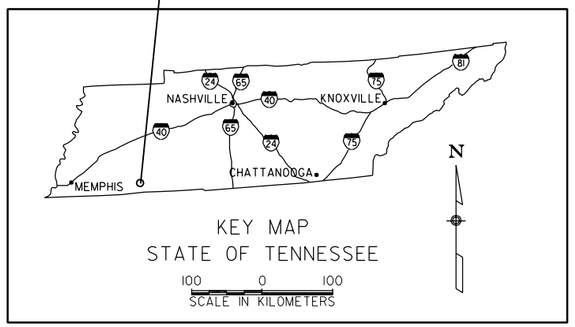

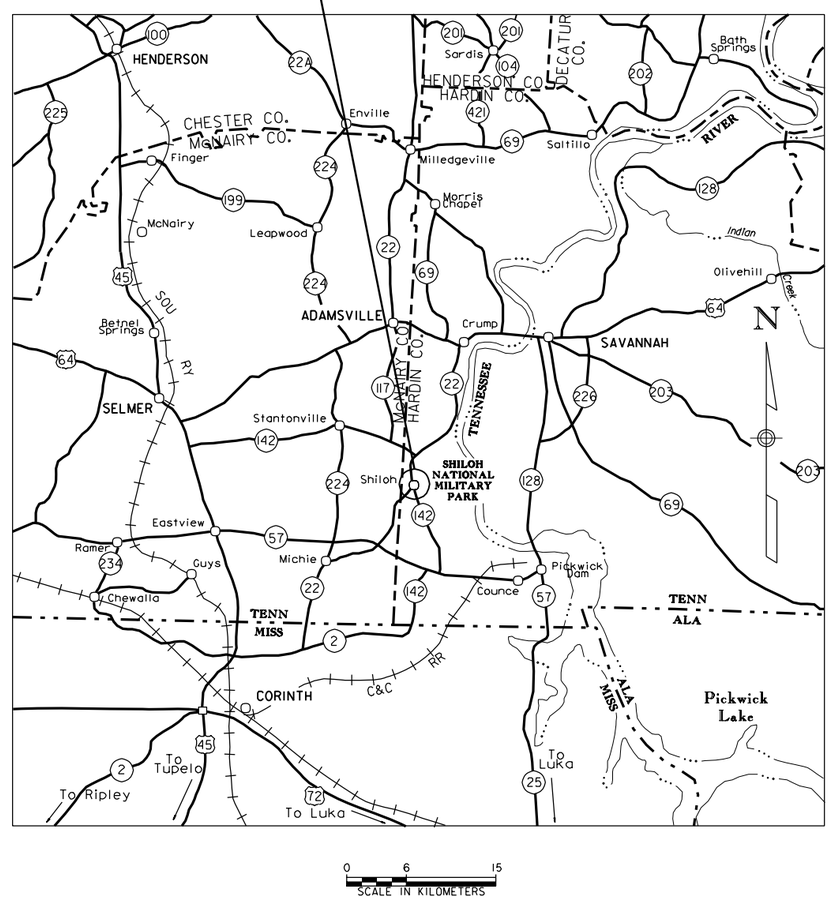

DESCRIPTION OF PROJECT
PROJECT LENGTH 5.084 km

IMPROVEMENTS: AGGREGATE BASE, SUPERPAVE ASPHALT CONCRETE PAVEMENT, BRIDGE OVER TILGHMAN BRANCH, PIPE REPLACEMENT AND OTHER MISCELLANEOUS WORK.

	PITTSBURG LANDING ROAD	SHERMAN/CAVALRY ROAD
ADT(2008)	260	40
ADT(2028)	360	360
DHV	50	50
D	50/50	100/0
V	30 km/h	30 km/h
C/A	NONE	NONE
e(max)	6%	6%

	WOOLF FIELD ROAD	HAMBURG-SAVANNAH ROAD	TENT HOSPITAL ROAD
ADT(2008)	40	370	260
ADT(2028)	50	450	360
DHV	5	65	50
D	50/50	50/50	100/0
V	30 km/h	60 km/h	30 km/h
C/A	NONE	NONE	NONE
e(max)	6%	6%	6%

SPECIFICATIONS:
"Standard Specifications for Construction of Roads and Bridges on Federal Highway Projects", FP-03 (Metric Units).

NOTE:
Unless otherwise noted, all dimensions shown without units are meters.

INDEX TO SHEETS

SHEET NO	DESCRIPTION
A-1	TITLE SHEET
A-2	SYMBOLS AND ABBREVIATIONS
B-1	LOCATION MAP
B-2 TO B-4	SURVEY INFORMATION SHEET
C-1 to C-5	TYPICAL SECTIONS
D-1 to D-7	TABULATION OF QUANTITIES
E-1 to E-10	SCHEDULES AND SUMMARIES
F-1 to F-7	SHERMAN/CAVALRY ROAD CONSTRUCTION PLANS AND PROFILES
F-8	McCLERNAND ROAD CONSTRUCTION PLAN
F-9	WOOLF FIELD ROAD CONSTRUCTION PLAN AND PROFILE
F-10 to F-11	TENT HOSPITAL ROAD CONSTRUCTION PLAN AND PROFILE
F-12 to F-13	PITTSBURG LANDING ROAD CONSTRUCTION PLAN AND PROFILE
F-14 to F-17	HAMBURG-SAVANNAH ROAD CONSTRUCTION PLANS
G-1	EROSION CONTROL NARRATIVE
G-2 to G-12	EROSION CONTROL PLANS
H-1	TRAFFIC CONTROL NARRATIVE
J-1 to J-5	DRAINAGE CROSS SECTIONS
K-1 to K-2	PITTSBURG LANDING RIPRAP PLANS
L-1 to L-31	STANDARDS AND DETAILS
M-1 to M-22	SHERMAN/CAVALRY ROAD CROSS SECTIONS
M-23 to M-26	WOOLF FIELD ROAD CROSS SECTIONS
M-27 to M-33	TENT HOSPITAL ROAD CROSS SECTIONS
M-34 to M-36	PITTSBURG LANDING ROAD CROSS SECTIONS
N-1 to N-20	TILGHMAN BRANCH BRIDGE PLANS

FEDERAL LANDS HIGHWAY
Metric
COMMITMENT TO EXCELLENCE

PLANS PREPARED BY

U.S.DEPARTMENT OF TRANSPORTATION
FEDERAL HIGHWAY ADMINISTRATION
EASTERN FEDERAL LANDS HIGHWAY DIVISION
STERLING, VIRGINIA
MAY 2008

Project Manager	Lead Designer
Jeff Johnson	Meseret Yigezu

NPS PACKAGE NUMBER: SHIL 88297

6/16/2008 11:21:33 AM M:\Projects\sh\502(3)\proj_de\CADD\title.dgn

NPS NO.	REG	STATE	PROJECT	SHEET NO.
304 41,920	SE	TN	TEA-21 SHIL 502(3)	A-2

Abutment	Abut.
Aggregate	aggr.
Ahead	AH
Alternate	alt.
Average daily traffic	ADT
Back	BK
Balance point	BP
Bearing	brg.
Begining	beg.
Bench mark	BM
Centerline	
Center to center	cc, c-c or c. to c.
Centers	ctrs.
Clear	clr.
Column	col.
Connection	conn.
Construction joint	Constr. jt.
Continuous	cont.
Corrugated metal pipe	CMP
Culvert	culv.
Curve centeral angle (spiral curve transitions)	Δ_c
Curve total angle (curve delta or deflection)	Δ
Design hourly volume	DHV
Design speed	V
Diagonal	diag.
Diameter	D, dia., or diaph.
Diaphragm	
Distance	dist.
Drawing(s)	dwg(s), or drwg(s)
Drop Inlet	DI
East	E
Edge of pavement	EP or EOP
Elevation	elev.
Elevation with number	El. 94.161 [El. 94.16]
Embankment	emb.
End section	ES
Equation	EQ or eq.
Excavation	exc.
Expansion joint	exp. jt.
Finish	fin.
Flange	flg.
Footing	ftg.
Galvanized	galv.
Gage(gauge)	ga.
Headwall	hdwl.
Hexagon	hex.
High water	HW
Inside diameter	ID
Joint	jt.
Lamination	lam.
Latitude	lat.
Left	lt., Lt. or LT
Length of curve(simple curve)	L
Length of curve (spiral curve transision)	Lc
Length of spiral	Ls
Longitudinal(longitude)	long.
Low water	LW

Mainline	M.L.
Material	matl.
Maximum	max.
Mile[Kilometer] post	M.P[K.P.]
Minimum	min.
Monument	mon.
Mechanically stabilized embankment	MSE
Original groung	OG
Out to out	o. to o.
Outside diameter	OD
On centers	o. c.
Normal crown	NC or NCR
North	N
Pavement	pvmt.
Plate	pl.
Point of compound curve	PCC
Point of curve	PC
Point of curve to spiral	PCS or CS
Point of intersection	PI
Point of spiral to curve	PSC or SC
Point of spiral to reverse spiral	SRS
Point of spiral to tangent	PST or ST
Point of tangent	PT
Point of tangent to spiral	PS or TS
Point on curve	POC
Point on spiral	POS
Point on tangent	POT
Radius	R
Range	R.
Reinforcement (reinforced)	reinf.
Required	reqd.
Right	Rt., rt.or RT
Right-of-way	R/W
Roadway	Rdwy.
Route	Rte.
Section	Sec.
South	S
Spacing, spaces or spaced	spa.
Spiral central angle	s
Standard	std.
Station	Sta.
Stiffener	stiff.
Stringer	stgr.
Structure	struc.
Superelevation rate	e
Symmetrical	sym.
Tangent distance (tangent length)	T
Tangent distance (spiral curve transision)	Ts
Temporary benchmark	TBM
Temporary construction easement	TCE
Thread	thd.
Township	T.
Typical	typ.
Vehicle per hour	vph
Vertical point of intersection	VPI
West	W

NATIONAL BOUNDARY
STATE BOUNDARY
COUNTY BOUNDARY
CITY BOUNDARY
TOWNSHIP or RANGE LINE
SECTION LINE
1/4 SECTION LINE
1/16 SECTION LINE
NATIONAL PARK or FOREST BOUNDARY
PROPERTY LINE — P/L
TRAVERSE POINT (Horizontal & Vertical) Top of Triangle Points North — T-45 2,645.9
TRAVERSE POINT (Horizontal) — T-3
BRASS CAP
STEEL PIN
HUB & TACK
SPOT ELEVATION — 99.9
COORDINATE GRID TICK

	EXISTING	PROPOSED
RIGHT-OF-WAY LINE	R/W	R/W
RIGHT-OF-WAY LINE with MONUMENT	R/W	R/W
SECTION CORNER	FOUND 36 31 1 6	PROJECTED 36 31 1 6
1/4 SECTION CORNER	15 22	15 22
1/16 SECTION		
PROPERTY CORNER		No Symbol
PARCEL NUMBER	No Symbol	400
EASEMENT (Permanent - Construction)	P/E	C/E
ROUTE NUMBERS	26 INTERSTATE	25 U.S. / 694 STATE

SLOPE STAKE — TOP OF CUT, TOE OF FILL, TRANSITION
ROADWAY, EXISTING
RAILROAD — SINGLE TRACK, MULTIPLE TRACK
TRAIL
INTERMITTENT DRAINAGE/ SMALL CREEK
SPRING
LARGE CREEK/RIVER
LAKE, POND or RESERVOIR; MARSHLAND
PAVEMENT REMOVAL/ROADWAY OBLITERATION
FULL DEPTH PAVEMENT
SIDEWALK ASPHALT/CONCRETE
MILL AND OVERLAY
OVERLAY
SILT FENCE — SF
DIVERSION BERM — DB
DIVERSION CHANNEL
CHECK DAM
RIPRAP/CULVERT RIPRAP
BORING LOCATION — B-1
TEST PIT — TP-1
NORTH ARROW — N
MATERIAL SOURCE

AREA PATTERN

	EXISTING	PROPOSED
FENCE	X X	XX XX
GATE with FENCE	X X	XX XX
CATTLEGUARD		
GUARDRAIL		
MEDIAN & SIDE (CONCRETE) BARRIER		
SIGNS — POST MOUNTED		
SIGNS — PORTABLE	No Symbol	
RETAINING WALL		wall face
OVERHEAD(POWER POLE) UTILITIES P=Electrical for transmission line E=Electrical for distribution line T=Telephone, E&T=Joint Electrical and Telephone FO=Fibre optics	P	P
SUPPORT POLE with ANCHOR		
TELEPHONE BOOTH or PEDESTAL	TB or TP	TB or TP
STREET LIGHT	or	or
UNDERGROUND UTILITIES G=gas, O=oil, P=power, SA=sanitary sewer, SS=storm sewer, T=telephone, W=water E=electrical, FO=fibre optics	W	W
BRIDGE		
PIPE CULVERT (arrow shows flow)		
PIPE CULVERT with END SECTION		
PIPE CULVERT with HEADWALL		
CULVERT with DROP INLET		
BOX CULVERT		
UNDERDRAIN	UD	UD
BUILDING		
TREELINE; TREE		

PROJECT SPECIFIC SYMBOLS AND ABBREVIATIONS:-

ASPHALT PAVEMENT REMOVAL
ROADWAY OBLITERATION
PORTLAND CEMENT CONCRETE SIDEWALK

U.S. DEPARTMENT OF TRANSPORTATION
FEDERAL HIGHWAY ADMINISTRATION
EASTERN FEDERAL LANDS HIGHWAY DIVISION
STERLING, VIRGINIA

SHILOH NATIONAL MILITARY PARK

SYMBOLS AND ABBREVIATIONS

5/30/2008 10:23:44 AM M:\Projects\shl\502(3)\proj_dev\CADD\Std-Det\V8-STANDARD\consymb.dgn

NPS NO.	REG	STATE	PROJECT	SHEET NO.
304 / 41,920	SE	TN	TEA-21 SHIL 502(3)	B-1

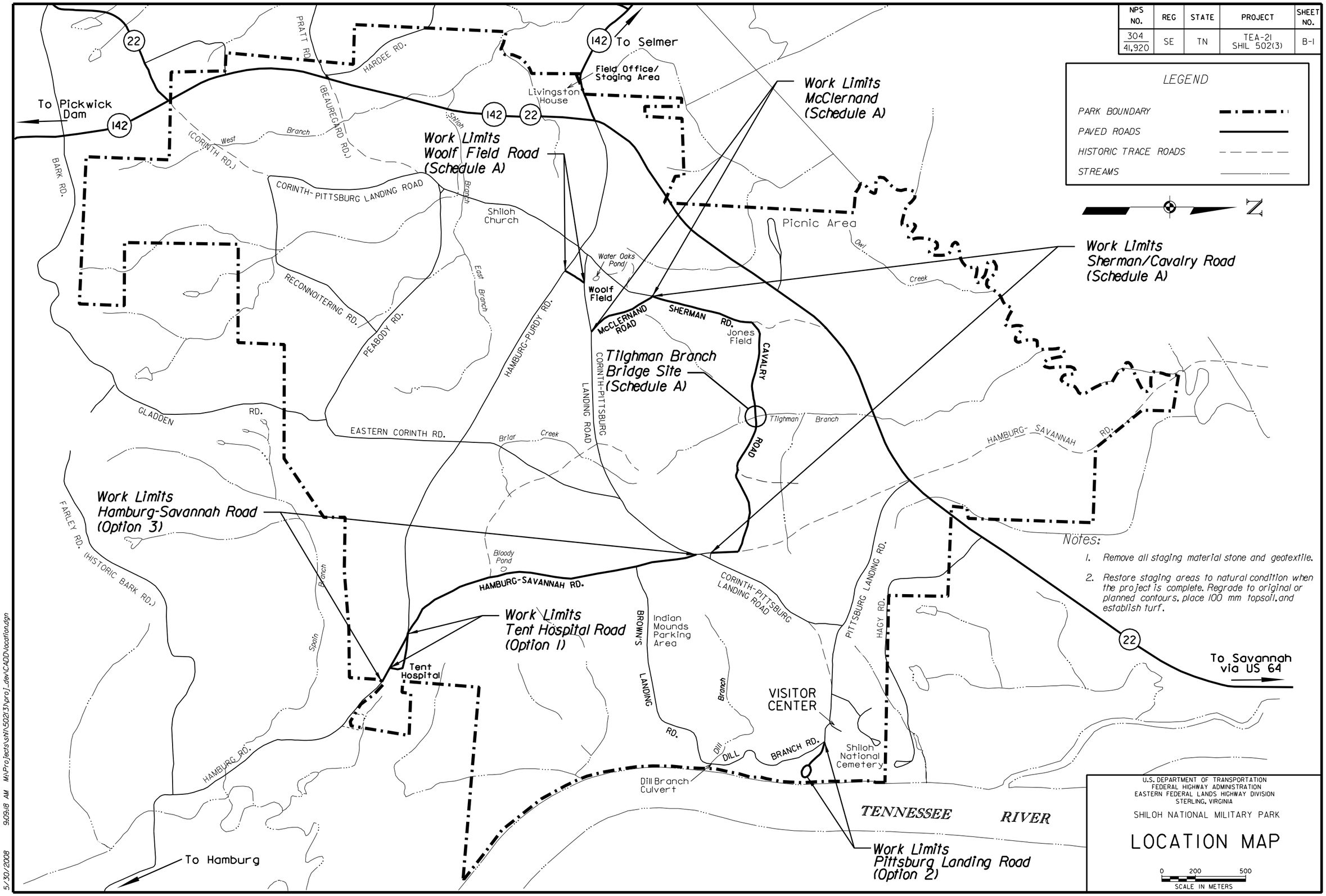

5/30/2008 9:09:18 AM M:\Projects\shil\502(3)\proj_dev\CADD\location.dgn

NPS NO.	REG	STATE	PROJECT	SHEET NO.
304 41,920	SE	TN	TEA-21 SHIL 502(3)	B-2

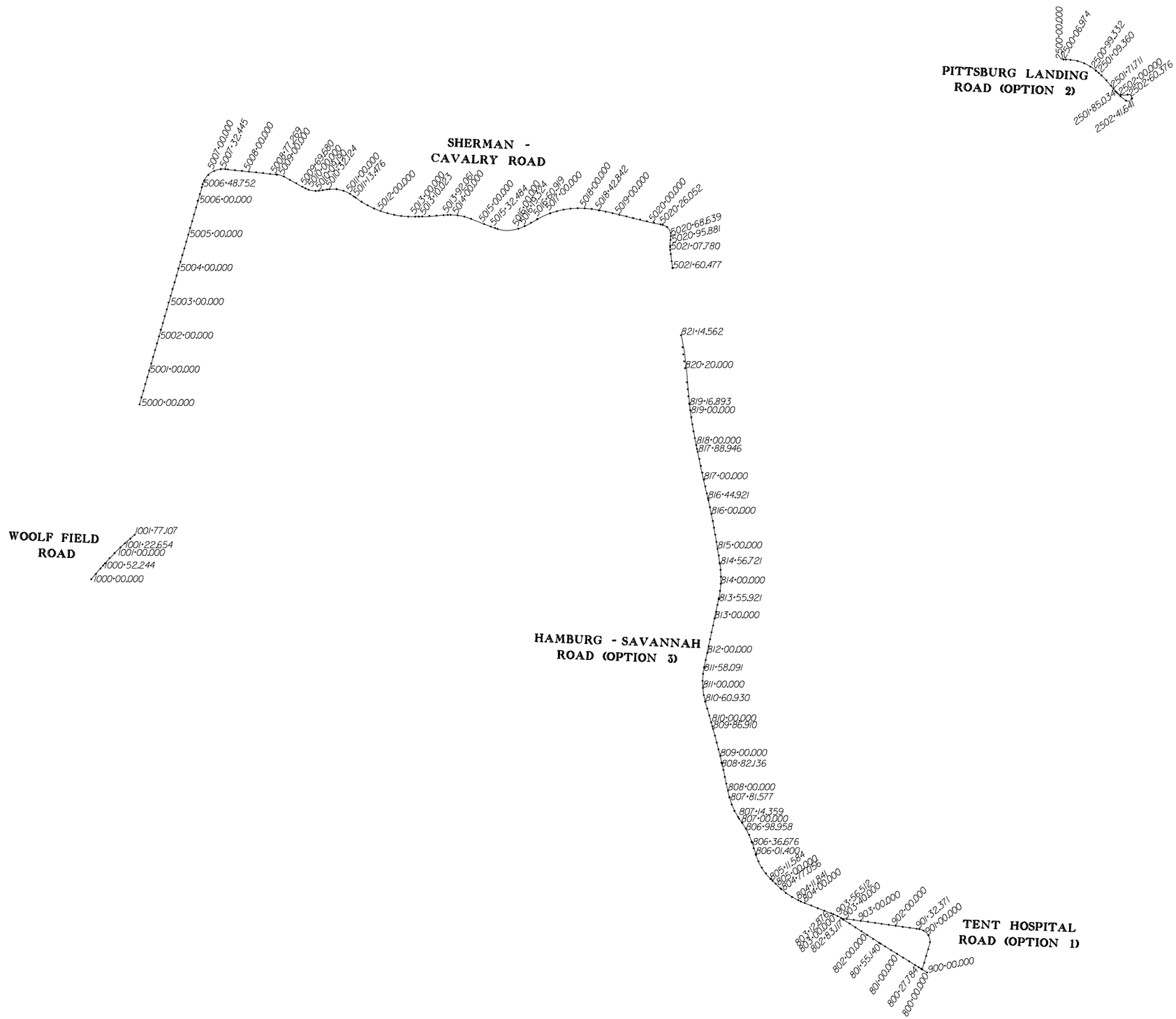

U.S. DEPARTMENT OF TRANSPORTATION
FEDERAL HIGHWAY ADMINISTRATION
EASTERN FEDERAL LANDS HIGHWAY DIVISION
STERLING, VIRGINIA

SHILOH NATIONAL MILITARY PARK

SURVEY INFO SHEET

0 200 400
SCALE IN METER

Sheet 1 of 3

6/16/2008 9:32:17 AM M:\Projects\sht\502(3)\proj_dev\CADD\02-sht(502(3)SIS.dgn

NPS NO.	REG	STATE	PROJECT	SHEET NO.
304 41,920	SE	TN	TEA-21 SHIL 502(3)	B-3

SHERMAN - CAVALRY ROAD

STAKED ALIGNMENT DATA

STATION	ELEV.	TYPE	ROAD-NAME
5000+00.000	145.792	60D-NAIL	CAVLRY
5000+20.000	145.845	60D-NAIL	CAVLRY
5000+40.000	145.946	60D-NAIL	CAVLRY
5000+60.000	146.063	60D-NAIL	CAVLRY
5000+80.000	146.098	60D-NAIL	CAVLRY
5001+00.000	146.047	60D-NAIL	CAVLRY
5001+20.000	145.859	60D-NAIL	CAVLRY
5001+40.000	145.686	60D-NAIL	CAVLRY
5001+60.000	145.458	60D-NAIL	CAVLRY
5001+80.000	145.202	60D-NAIL	CAVLRY
5002+00.000	144.849	60D-NAIL	CAVLRY
5002+20.000	144.358	60D-NAIL	CAVLRY
5002+40.000	143.892	60D-NAIL	CAVLRY
5002+60.000	143.406	60D-NAIL	CAVLRY
5002+80.000	142.925	60D-NAIL	CAVLRY
5003+00.000	142.416	60D-NAIL	CAVLRY
5003+20.000	141.888	60D-NAIL	CAVLRY
5003+40.000	141.287	60D-NAIL	CAVLRY
5003+60.000	140.858	60D-NAIL	CAVLRY
5003+80.000	140.562	60D-NAIL	CAVLRY
5004+00.000	140.406	60D-NAIL	CAVLRY
5004+00.000	140.408	60D-NAIL	CAVLRY
5004+20.000	140.318	60D-NAIL	CAVLRY
5004+40.000	140.445	60D-NAIL	CAVLRY
5004+60.000	140.668	60D-NAIL	CAVLRY
5004+80.000	140.950	60D-NAIL	CAVLRY
5005+00.000	141.199	60D-NAIL	CAVLRY
5005+20.000	141.406	60D-NAIL	CAVLRY
5005+40.000	141.494	60D-NAIL	CAVLRY
5005+60.000	141.507	60D-NAIL	CAVLRY
5005+80.000	141.788	60D-NAIL	CAVLRY
5006+00.000	142.053	60D-NAIL	CAVLRY
5006+00.000	142.039	60D-NAIL	CAVLRY
5006+00.000	142.015	60D-NAIL	CAVLRY
5006+20.000	142.084	60D-NAIL	CAVLRY
5006+40.000	142.421	60D-NAIL	CAVLRY
5006+48.752	142.490	60D-NAIL	CAVLRY
5006+60.000	142.639	60D-NAIL	CAVLRY
5006+80.000	142.849	60D-NAIL	CAVLRY
5007+00.000	143.171	60D-NAIL	CAVLRY
5007+20.000	143.354	60D-NAIL	CAVLRY
5007+20.000	143.327	60D-NAIL	CAVLRY
5007+32.445	143.378	60D-NAIL	CAVLRY
5007+40.000	143.343	60D-NAIL	CAVLRY
5007+60.000	143.075	60D-NAIL	CAVLRY
5007+80.000	142.819	60D-NAIL	CAVLRY
5008+00.000	142.614	60D-NAIL	CAVLRY
5008+20.000	142.486	60D-NAIL	CAVLRY
5008+40.000	142.335	60D-NAIL	CAVLRY
5008+60.000	142.225	60D-NAIL	CAVLRY
5008+77.269	142.122	60D-NAIL	CAVLRY
5008+80.000	142.067	60D-NAIL	CAVLRY
5008+80.000	142.074	60D-NAIL	CAVLRY
5009+00.000	141.887	60D-NAIL	CAVLRY
5009+20.000	141.716	60D-NAIL	CAVLRY
5009+40.000	141.843	60D-NAIL	CAVLRY
5009+60.000	141.551	60D-NAIL	CAVLRY
5009+69.680	141.391	60D-NAIL	CAVLRY
5009+80.000	140.882	60D-NAIL	CAVLRY
5010+00.000	140.213	60D-NAIL	CAVLRY
5010+00.000	140.203	60D-NAIL	CAVLRY
5010+09.190	139.782	60D-NAIL	CAVLRY
5010+20.000	139.230	60D-NAIL	CAVLRY
5010+32.124	138.673	60D-NAIL	CAVLRY
5010+40.000	138.022	60D-NAIL	CAVLRY
5010+60.000	136.568	60D-NAIL	CAVLRY
5010+60.000	136.584	60D-NAIL	CAVLRY
5010+80.000	135.078	60D-NAIL	CAVLRY
5011+00.000	133.674	60D-NAIL	CAVLRY
5011+13.476	132.052	60D-NAIL	CAVLRY
5011+20.000	131.362	60D-NAIL	CAVLRY

STAKED ALIGNMENT DATA

STATION	ELEV.	TYPE	ROAD-NAME
5011+40.000	129.567	60D-NAIL	CAVLRY
5011+60.000	128.113	60D-NAIL	CAVLRY
5011+80.000	127.211	60D-NAIL	CAVLRY
5011+80.000	127.205	60D-NAIL	CAVLRY
5012+00.000	126.661	60D-NAIL	CAVLRY
5012+20.000	126.457	60D-NAIL	CAVLRY
5012+40.000	126.580	60D-NAIL	CAVLRY
5012+60.000	126.559	60D-NAIL	CAVLRY
5012+80.000	126.720	60D-NAIL	CAVLRY
5013+00.000	128.071	60D-NAIL	CAVLRY
5013+10.023	129.049	60D-NAIL	CAVLRY
5013+20.000	130.122	60D-NAIL	CAVLRY
5013+40.000	133.756	60D-NAIL	CAVLRY
5013+60.000	136.451	60D-NAIL	CAVLRY
5013+80.000	138.038	60D-NAIL	CAVLRY
5013+92.061	138.820	60D-NAIL	CAVLRY
5014+00.000	139.244	60D-NAIL	CAVLRY
5014+20.000	140.346	60D-NAIL	CAVLRY
5014+40.000	141.168	60D-NAIL	CAVLRY
5014+60.000	141.494	60D-NAIL	CAVLRY
5015+00.000	141.557	60D-NAIL	CAVLRY
5015+20.000	142.063	60D-NAIL	CAVLRY
5015+32.484	142.494	60D-NAIL	CAVLRY
5015+40.000	142.739	60D-NAIL	CAVLRY
5015+60.000	143.208	60D-NAIL	CAVLRY
5015+60.000	143.213	60D-NAIL	CAVLRY
5015+80.000	143.288	60D-NAIL	CAVLRY
5016+00.000	143.397	60D-NAIL	CAVLRY
5016+19.324	143.562	60D-NAIL	CAVLRY
5016+20.000	143.555	60D-NAIL	CAVLRY
5016+40.000	143.747	60D-NAIL	CAVLRY
5016+60.000	144.004	60D-NAIL	CAVLRY
5016+60.919	144.047	60D-NAIL	CAVLRY
5016+60.919	144.027	60D-NAIL	CAVLRY
5017+00.000	144.651	60D-NAIL	CAVLRY
5017+00.000	144.659	60D-NAIL	CAVLRY
5017+20.000	145.079	60D-NAIL	CAVLRY
5017+40.000	145.554	60D-NAIL	CAVLRY
5017+60.000	146.125	60D-NAIL	CAVLRY
5017+80.000	146.633	60D-NAIL	CAVLRY
5018+00.000	146.627	60D-NAIL	CAVLRY
5018+20.000	146.091	60D-NAIL	CAVLRY
5018+20.000	146.110	60D-NAIL	CAVLRY
5018+40.000	145.441	60D-NAIL	CAVLRY
5018+42.842	145.365	60D-NAIL	CAVLRY
5018+60.000	144.830	60D-NAIL	CAVLRY
5018+80.000	144.444	60D-NAIL	CAVLRY
5019+00.000	144.166	60D-NAIL	CAVLRY
5019+20.000	143.809	60D-NAIL	CAVLRY
5019+40.000	143.305	60D-NAIL	CAVLRY
5019+40.000	143.291	60D-NAIL	CAVLRY
5019+60.000	142.872	60D-NAIL	CAVLRY
5019+80.000	143.130	60D-NAIL	CAVLRY
5020+00.000	143.836	60D-NAIL	CAVLRY
5020+20.000	144.613	60D-NAIL	CAVLRY
5020+26.052	144.828	60D-NAIL	CAVLRY
5020+40.000	145.109	60D-NAIL	CAVLRY
5020+60.000	144.914	60D-NAIL	CAVLRY
5020+68.639	144.895	60D-NAIL	CAVLRY
5020+80.000	144.751	60D-NAIL	CAVLRY
5020+95.881	144.604	60D-NAIL	CAVLRY
5021+00.000	144.554	60D-NAIL	CAVLRY
5021+07.780	144.498	60D-NAIL	CAVLRY
5021+20.000	144.391	60D-NAIL	CAVLRY
5021+40.000	144.223	60D-NAIL	CAVLRY
5021+60.000	143.960	60D-NAIL	CAVLRY
5021+60.477	143.972	60D-NAIL	CAVLRY

WOOLF FIELD ROAD

STAKED ALIGNMENT DATA

STATION	ELEV.	TYPE	ROAD-NAME
1000+00.000	143.920	60D-NAIL	WOOLF
1000+20.000	144.000	60D-NAIL	WOOLF
1000+40.000	144.368	60D-NAIL	WOOLF
1000+52.244	144.614	60D-NAIL	WOOLF
1000+60.000	144.801	60D-NAIL	WOOLF
1000+80.000	145.215	60D-NAIL	WOOLF
1001+00.000	145.626	60D-NAIL	WOOLF
1001+22.654	145.958	60D-NAIL	WOOLF
1001+40.000	146.046	60D-NAIL	WOOLF
1001+60.000	146.430	60D-NAIL	WOOLF
1001+77.107	146.033	60D-NAIL	WOOLF

TENT HOSPITAL ROAD (OPTION 1)

STAKED ALIGNMENT DATA

STATION	ELEV.	TYPE	ROAD-NAME
900+00.000	146.087	60D-NAIL	TENT
900+20.000	145.749	60D-NAIL	TENT
900+40.000	144.932	60D-NAIL	TENT
900+60.000	144.389	60D-NAIL	TENT
900+80.000	144.710	60D-NAIL	TENT
901+00.000	145.646	60D-NAIL	TENT
901+20.000	146.191	60D-NAIL	TENT
901+32.371	146.476	60D-NAIL	TENT
901+40.000	146.558	60D-NAIL	TENT
901+60.000	147.023	60D-NAIL	TENT
901+80.000	147.567	60D-NAIL	TENT
902+00.000	148.226	60D-NAIL	TENT
902+20.000	148.909	60D-NAIL	TENT
902+40.000	149.706	60D-NAIL	TENT
902+60.000	150.185	60D-NAIL	TENT
902+80.000	149.900	60D-NAIL	TENT
903+00.000	149.913	60D-NAIL	TENT
903+20.000	149.918	60D-NAIL	TENT
903+40.000	149.901	60D-NAIL	TENT
903+56.512	149.674	60D-NAIL	TENT

PITTSBURG LANDING ROAD (OPTION 2)

STAKED ALIGNMENT DATA

STATION	ELEV.	TYPE	RD-NAME
2500+00.000	142.160	60D-NAIL	PITTS
2500+06.974	141.704	60D-NAIL	PITTS
2500+20.000	140.909	60D-NAIL	PITTS
2500+40.000	139.614	60D-NAIL	PITTS
2500+60.000	138.490	60D-NAIL	PITTS
2500+80.000	137.238	60D-NAIL	PITTS
2500+99.332	135.780	60D-NAIL	PITTS
2501+00.000	135.730	60D-NAIL	PITTS
2501+09.360	134.887	60D-NAIL	PITTS
2501+20.000	133.916	60D-NAIL	PITTS
2501+40.000	131.917	60D-NAIL	PITTS
2501+60.000	129.786	60D-NAIL	PITTS
2501+71.711	128.394	60D-NAIL	PITTS
2501+80.000	127.358	60D-NAIL	PITTS
2501+85.034	126.720	60D-NAIL	PITTS
2502+00.000	124.784	60D-NAIL	PITTS
2502+20.000	122.256	60D-NAIL	PITTS
2502+40.000	121.865	60D-NAIL	PITTS
2502+41.641	121.996	60D-NAIL	PITTS
2502+60.000	122.041	60D-NAIL	PITTS
2502+60.376	122.074	60D-NAIL	PITTS
2502+80.000	124.900	60D-NAIL	PITTS
2502+93.751	0.000	60D-NAIL	PITTS

HAMBURG - SAVANNAH ROAD (OPTION 3)

STAKED ALIGNMENT DATA

STATION	ELEV.	TYPE	ROAD-NAME
800+00.000	145.738	60D-NAIL	HAMSAV-1
800+20.000	146.126	60D-NAIL	HAMSAV-1
800+27.784	146.238	60D-NAIL	HAMSAV-1
800+40.000	146.431	60D-NAIL	HAMSAV-1
800+60.000	146.659	60D-NAIL	HAMSAV-1
800+80.000	147.838	60D-NAIL	HAMSAV-1
801+00.000	147.301	60D-NAIL	HAMSAV-1
801+20.000	147.683	60D-NAIL	HAMSAV-1
801+40.000	148.115	60D-NAIL	HAMSAV-1
801+55.140	148.468	60D-NAIL	HAMSAV-1
801+60.000	148.583	60D-NAIL	HAMSAV-1
801+80.000	149.183	60D-NAIL	HAMSAV-1
802+00.000	149.826	60D-NAIL	HAMSAV-1
802+20.000	150.466	60D-NAIL	HAMSAV-1
802+40.000	150.524	60D-NAIL	HAMSAV-1
802+60.000	150.153	60D-NAIL	HAMSAV-1
802+80.000	149.798	60D-NAIL	HAMSAV-1
802+83.117	149.754	60D-NAIL	HAMSAV-1
803+00.000	149.503	60D-NAIL	HAMSAV-1
803+12.876	149.311	60D-NAIL	HAMSAV-1
803+20.000	149.213	60D-NAIL	HAMSAV-1
803+40.000	149.035	60D-NAIL	HAMSAV-1
803+60.000	149.025	60D-NAIL	HAMSAV-1
803+80.000	149.177	60D-NAIL	HAMSAV-1
804+00.000	149.491	60D-NAIL	HAMSAV-1
804+11.841	149.473	60D-NAIL	HAMSAV-1
804+20.000	149.324	60D-NAIL	HAMSAV-1
804+40.000	148.823	60D-NAIL	HAMSAV-1
804+40.000	148.820	60D-NAIL	HAMSAV-1
804+60.000	148.382	60D-NAIL	HAMSAV-1
804+77.056	147.955	60D-NAIL	HAMSAV-1
804+80.000	147.863	60D-NAIL	HAMSAV-1
805+00.000	147.014	60D-NAIL	HAMSAV-1
805+11.584	146.487	60D-NAIL	HAMSAV-1
805+20.000	146.034	60D-NAIL	HAMSAV-1
805+40.000	144.816	60D-NAIL	HAMSAV-1
805+60.000	144.001	60D-NAIL	HAMSAV-1
805+80.000	143.914	60D-NAIL	HAMSAV-1
806+00.000	144.589	60D-NAIL	HAMSAV-1
806+00.000	144.590	60D-NAIL	HAMSAV-1
806+01.400	144.666	60D-NAIL	HAMSAV-1
806+01.400	144.655	60D-NAIL	HAMSAV-1
806+20.000	145.704	60D-NAIL	HAMSAV-1
806+36.676	146.593	60D-NAIL	HAMSAV-1
806+40.000	146.739	60D-NAIL	HAMSAV-1
806+60.000	147.254	60D-NAIL	HAMSAV-1
806+80.000	147.308	60D-NAIL	HAMSAV-1
806+98.958	146.995	60D-NAIL	HAMSAV-1
807+00.000	146.976	60D-NAIL	HAMSAV-1
807+14.359	146.821	60D-NAIL	HAMSAV-1
807+20.000	146.818	60D-NAIL	HAMSAV-1
807+40.000	147.083	60D-NAIL	HAMSAV-1
807+40.000	147.086	60D-NAIL	HAMSAV-1
807+60.000	147.727	60D-NAIL	HAMSAV-1
807+80.000	148.710	60D-NAIL	HAMSAV-1
807+81.577	148.787	60D-NAIL	HAMSAV-1
808+00.000	149.558	60D-NAIL	HAMSAV-1
808+20.000	149.912	60D-NAIL	HAMSAV-1
808+40.000	149.863	60D-NAIL	HAMSAV-1
808+60.000	149.697	60D-NAIL	HAMSAV-1
808+80.000	149.580	60D-NAIL	HAMSAV-1
808+82.136	149.552	60D-NAIL	HAMSAV-1
809+00.000	149.396	60D-NAIL	HAMSAV-1
809+20.000	149.329	60D-NAIL	HAMSAV-1
809+40.000	149.324	60D-NAIL	HAMSAV-1
809+60.000	149.372	60D-NAIL	HAMSAV-1
809+80.000	149.415	60D-NAIL	HAMSAV-1
809+86.910	149.447	60D-NAIL	HAMSAV-1
810+00.000	149.509	60D-NAIL	HAMSAV-1
810+20.000	149.746	60D-NAIL	HAMSAV-1
810+40.000	149.959	60D-NAIL	HAMSAV-1
810+60.000	150.107	60D-NAIL	HAMSAV-1
810+60.930	150.102	60D-NAIL	HAMSAV-1
810+80.000	150.034	60D-NAIL	HAMSAV-1
811+00.000	149.739	60D-NAIL	HAMSAV-1
811+20.000	149.238	60D-NAIL	HAMSAV-1

STAKED ALIGNMENT DATA

STATION	ELEV.	TYPE	ROAD-NAME
811+40.000	148.729	60D-NAIL	HAMSAV-1
811+58.091	148.199	60D-NAIL	HAMSAV-1
811+60.000	148.150	60D-NAIL	HAMSAV-1
811+80.000	147.750	60D-NAIL	HAMSAV-1
812+00.000	147.565	60D-NAIL	HAMSAV-1
812+20.000	147.617	60D-NAIL	HAMSAV-1
812+40.000	147.807	60D-NAIL	HAMSAV-1
812+60.000	148.059	60D-NAIL	HAMSAV-1
812+80.000	148.148	60D-NAIL	HAMSAV-1
813+00.000	148.115	60D-NAIL	HAMSAV-1
813+20.000	148.046	60D-NAIL	HAMSAV-1
813+40.000	147.859	60D-NAIL	HAMSAV-1
813+55.921	147.721	60D-NAIL	HAMSAV-1
813+60.000	147.610	60D-NAIL	HAMSAV-1
813+80.000	147.352	60D-NAIL	HAMSAV-1
814+00.000	147.134	60D-NAIL	HAMSAV-1
814+20.000	146.885	60D-NAIL	HAMSAV-1
814+20.000	146.852	60D-NAIL	HAMSAV-1
814+40.000	146.615	60D-NAIL	HAMSAV-1
814+56.721	146.458	60D-NAIL	HAMSAV-1
814+60.000	146.426	60D-NAIL	HAMSAV-1
814+80.000	146.181	60D-NAIL	HAMSAV-1
815+00.000	145.898	60D-NAIL	HAMSAV-1
815+20.000	145.319	60D-NAIL	HAMSAV-1
815+40.000	144.689	60D-NAIL	HAMSAV-1
815+60.000	144.034	60D-NAIL	HAMSAV-1
815+80.000	143.472	60D-NAIL	HAMSAV-1
816+00.000	143.180	60D-NAIL	HAMSAV-1
816+20.000	142.959	60D-NAIL	HAMSAV-1
816+40.000	142.906	60D-NAIL	HAMSAV-1
816+44.921	142.918	60D-NAIL	HAMSAV-1
816+60.000	143.055	60D-NAIL	HAMSAV-1
816+80.000	143.339	60D-NAIL	HAMSAV-1
817+00.000	143.780	60D-NAIL	HAMSAV-1
817+20.000	144.189	60D-NAIL	HAMSAV-1
817+40.000	144.546	60D-NAIL	HAMSAV-1
817+60.000	144.856	60D-NAIL	HAMSAV-1
817+80.000	145.037	60D-NAIL	HAMSAV-1
817+88.946	145.057	60D-NAIL	HAMSAV-1
818+00.000	145.054	60D-NAIL	HAMSAV-1
818+20.000	144.983	60D-NAIL	HAMSAV-1
818+40.000	144.787	60D-NAIL	HAMSAV-1
818+60.000	144.534	60D-NAIL	HAMSAV-1
818+80.000	144.234	60D-NAIL	HAMSAV-1
819+00.000	143.932	60D-NAIL	HAMSAV-1
819+16.893	143.680	60D-NAIL	HAMSAV-1
819+20.000	143.661	60D-NAIL	HAMSAV-1
819+40.000	143.447	60D-NAIL	HAMSAV-1
819+60.000	143.280	60D-NAIL	HAMSAV-1
819+80.000	143.193	60D-NAIL	HAMSAV-1
820+20.000	143.155	60D-NAIL	HAMSAV-1
820+40.000	143.092	60D-NAIL	HAMSAV-1
820+60.000	143.128	60D-NAIL	HAMSAV-1
820+80.000	143.210	60D-NAIL	HAMSAV-1
821+14.562	143.023	60D-NAIL	HAMSAV-1

U.S. DEPARTMENT OF TRANSPORTATION
FEDERAL HIGHWAY ADMINISTRATION
EASTERN FEDERAL LANDS HIGHWAY DIVISION
STERLING, VIRGINIA

SHILOH NATIONAL MILITARY PARK

SURVEY INFO SHEET

6/16/2008 9:32:35 AM M:\Projects\sh\502(3)\proj_dev\CADD\02-sh1502(3)SIS.dgn

NPS NO.	REG	STATE	PROJECT	SHEET NO.
304 41,920	SE	TN	TEA-21 SHIL 502(3)	B-4

106
HUB&TACK

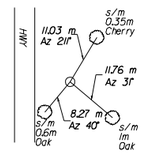

107
HUB&TACK

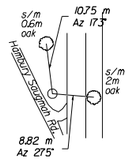

130
HUB&TACK on
knoll 11.70m Right
of Rte 142 ETP

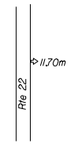

134
HUB&TACK
8.85m Rt of EP

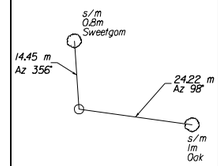

134
HUB&TACK

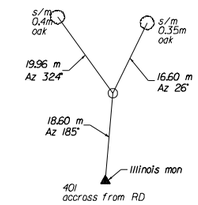

135
HUB&TACK
near Rt EP
0.4 Rt of EP

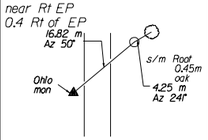

137
HUB&TACK

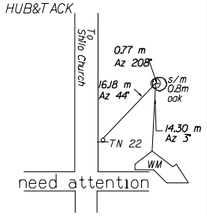

148
HUB&TACK
2.4m Rt of EP

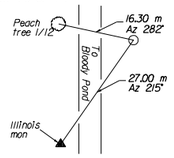

149
HUB&TACK
3.8m LT of LT EP

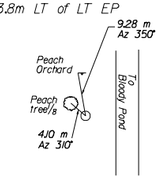

150
HUB&TACK
3.3m LT of LT EP

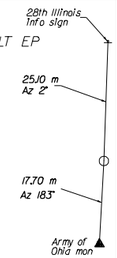

151
HUB&TACK
2.9m RT of RT EP

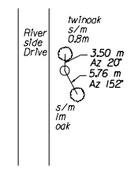

153
HUB&TACK

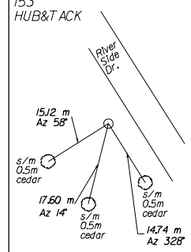

154
HUB&TACK

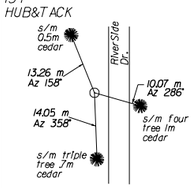

155
HUB&TACK
In woods

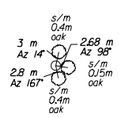

158
HUB&TACK
In woods

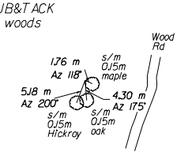

164
HUB&TACK
In Island

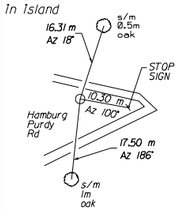

165
HUB&TACK

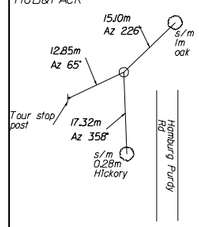

166
HUB&TACK
0.8m LT of LT EP

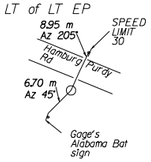

167
HUB&TACK

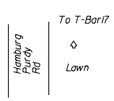

404
HUB&TACK
In gravel Rd

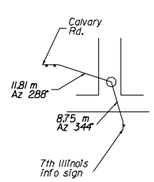

405
HUB&TACK @
woods line
4.2m RT of RD

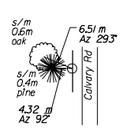

406
HUB&TACK
In Rd

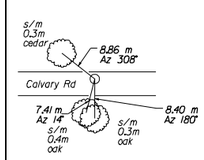

U.S. DEPARTMENT OF TRANSPORTATION
FEDERAL HIGHWAY ADMINISTRATION
EASTERN FEDERAL LANDS HIGHWAY DIVISION
STERLING, VIRGINIA

SHILOH NATIONAL MILITARY PARK

SURVEY INFO SHEET

6/16/2008 9:35:36 AM M:\Projects\shl\502(3)\proj_dev\CADD\02-shl\502(3)SIS.dgn

NPS NO.	REG	STATE	PROJECT	SHEET NO.
304 / 41,920	SE	TN	TEA-21 SHIL 502(3)	C-1

NOTES:

1. Unless otherwise shown, all dimensions are in meters.
2. Place topsoil to a minimum depth of 100 mm on all disturbed areas, except paved areas and those with aggregate-topsoil course. See Section 624.
3. Seed all disturbed areas, except paved areas, in accordance with Section 625.
4. Break up the cleared ground surface beneath proposed embankment sections less than 1 meter in height to a minimum depth of 100 mm prior to placing embankment material. See Section 204.
5. Prune back tree branches below 6 m in height over the roadway prism. Branches should be pruned back to the branch collar or as directed by the CO (no-pay).

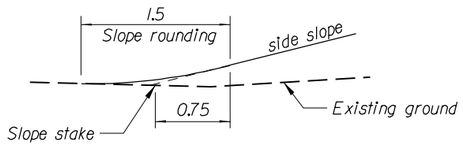

DETAIL A
Slope Rounding
(fill slope shown)

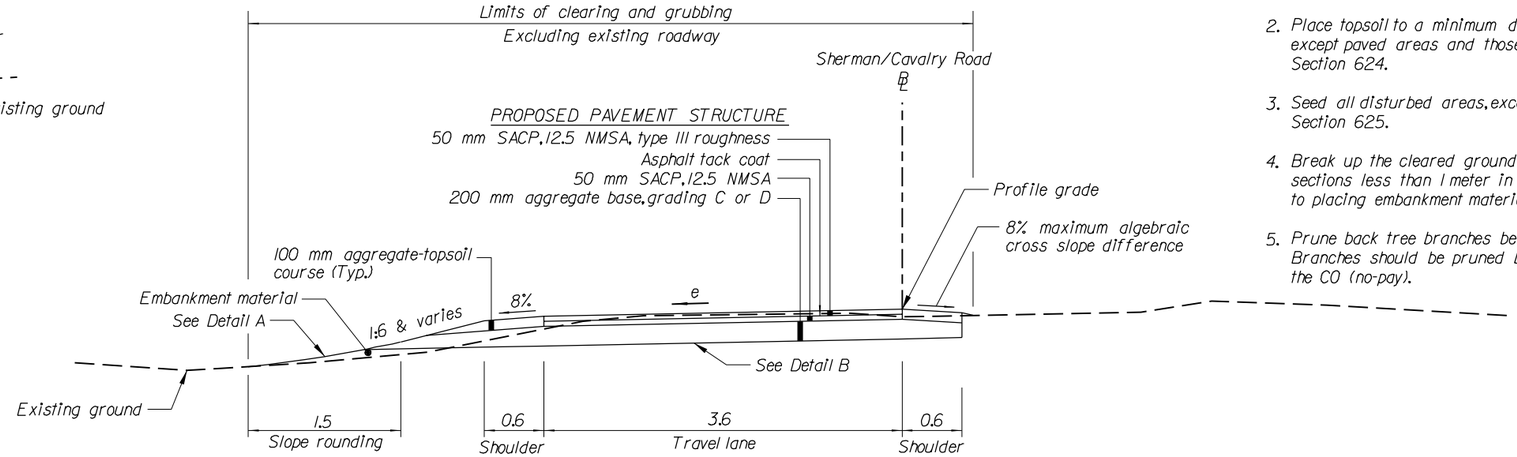

REALIGNMENT SECTION

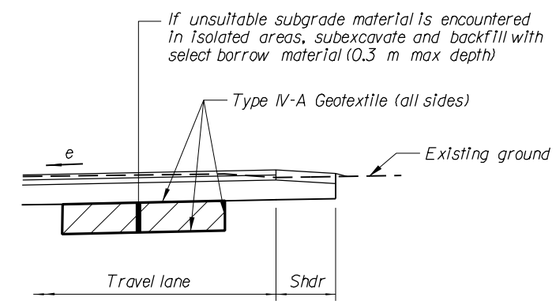

DETAIL B
Isolated Subexcavation Areas

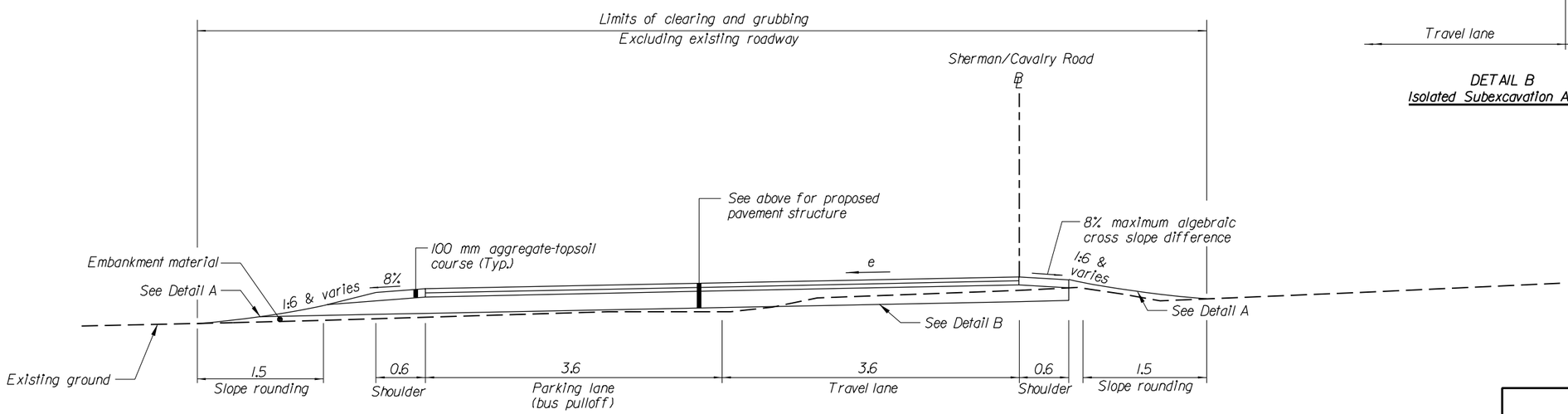

REALIGNMENT SECTION
(with pulloff)

No Scale

U.S. DEPARTMENT OF TRANSPORTATION
FEDERAL HIGHWAY ADMINISTRATION
EASTERN FEDERAL LANDS HIGHWAY DIVISION
STERLING, VIRGINIA

SHILOH NATIONAL MILITARY PARK

TYPICAL SECTIONS

SHERMAN/CAVALRY ROAD

SHEET 1 OF 5

6/11/2008 2:10:48 PM M:\Projects\shil\502(3)\proj_dev\CADD\typical.dgn

NPS NO.	REG	STATE	PROJECT	SHEET NO.
304 / 41,920	SE	TN	TEA-21 SHIL 502(3)	C-2

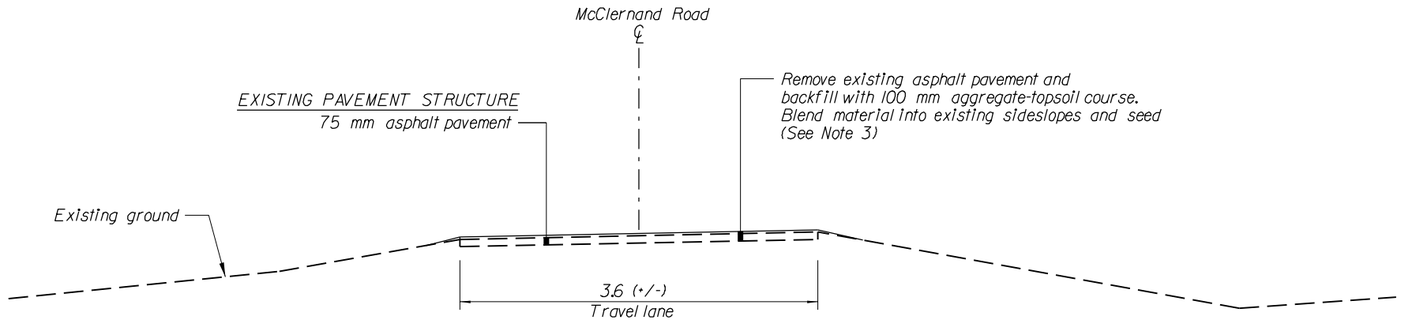

McCLERNAND ROAD

NOTES:

1. Unless otherwise shown, all dimensions are in meters.
2. Place topsoil to a minimum depth of 100 mm on all disturbed areas, except paved areas and those with aggregate-topsoil course. See Section 624.
3. Seed all disturbed areas, except paved areas, in accordance with Section 625.
4. Break up the cleared ground surface beneath proposed embankment sections less than 1 meter in height to a minimum depth of 100 mm prior to placing embankment material. See Section 204.

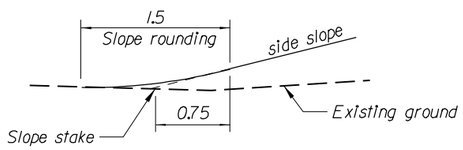

DETAIL A
Slope Rounding
(fill slope shown)

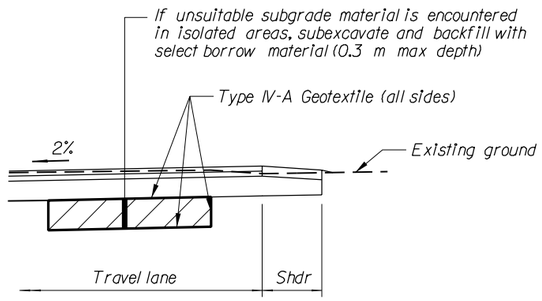

DETAIL B
Isolated Subexcavation Areas

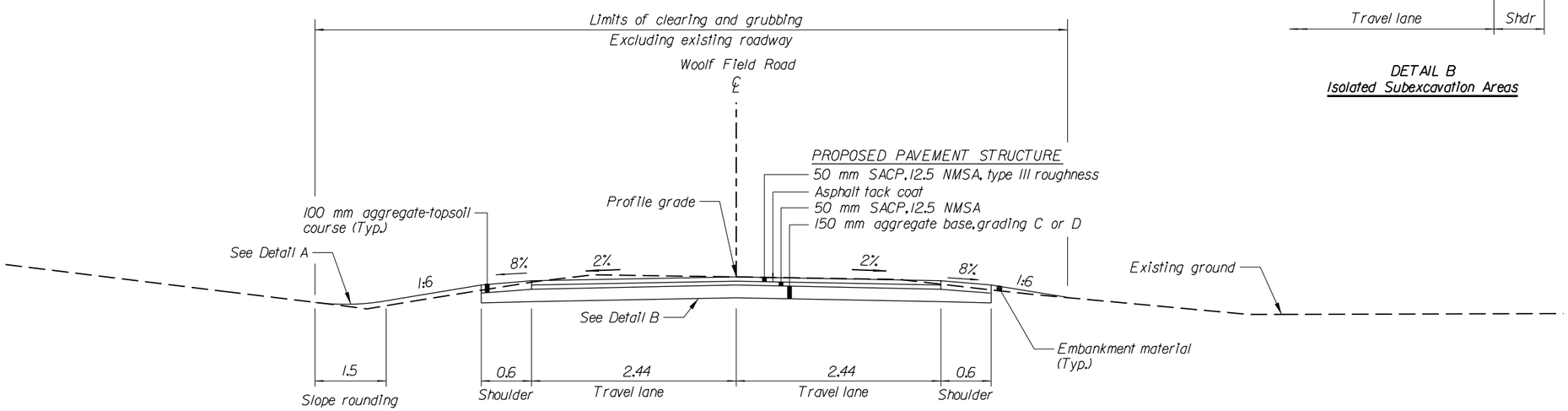

WOOLF FIELD ROAD

No Scale

U.S. DEPARTMENT OF TRANSPORTATION
FEDERAL HIGHWAY ADMINISTRATION
EASTERN FEDERAL LANDS HIGHWAY DIVISION
STERLING, VIRGINIA

SHILOH NATIONAL MILITARY PARK

TYPICAL SECTIONS

McCLERNAND ROAD
&
WOOLF FIELD ROAD

SHEET 2 OF 5

6/11/2008 2:12:27 PM M:\Projects\shil\502(3)\proj_dev\CADD\typical.dgn

NPS NO.	REG	STATE	PROJECT	SHEET NO.
304 / 41,920	SE	TN	TEA-21 SHIL 502(3)	C-3

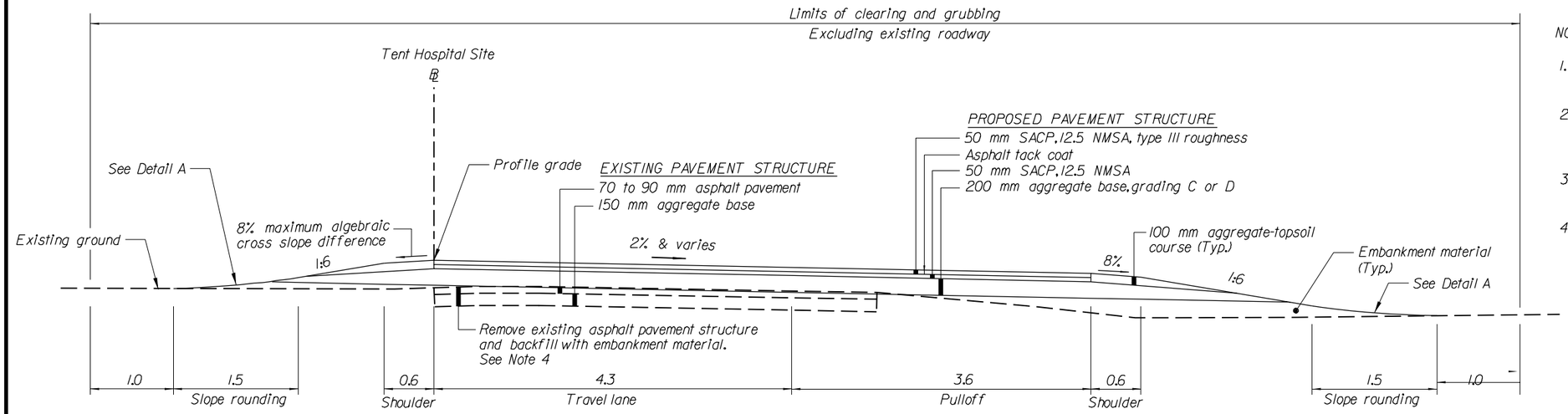

REALIGNMENT SECTION
(Tangent with pulloff)

NOTES:

1. Unless otherwise shown, all dimensions are in meters.
2. Place topsoil to a minimum depth of 100 mm on all disturbed areas, except paved areas and those with aggregate-topsoil course. See Section 624.
3. Seed all disturbed areas, except paved areas, in accordance with Section 625.
4. Break up the cleared ground surface beneath proposed embankment sections less than 1 meter in height to a minimum depth of 100 mm prior to placing embankment material. See Section 204.

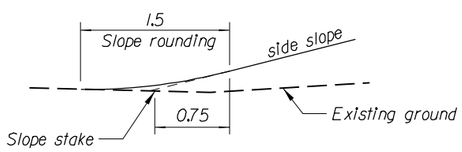

DETAIL A
Slope Rounding
(fill slope shown)

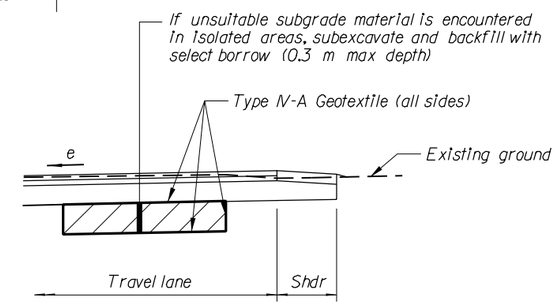

DETAIL B
Isolated Subexcavation Areas

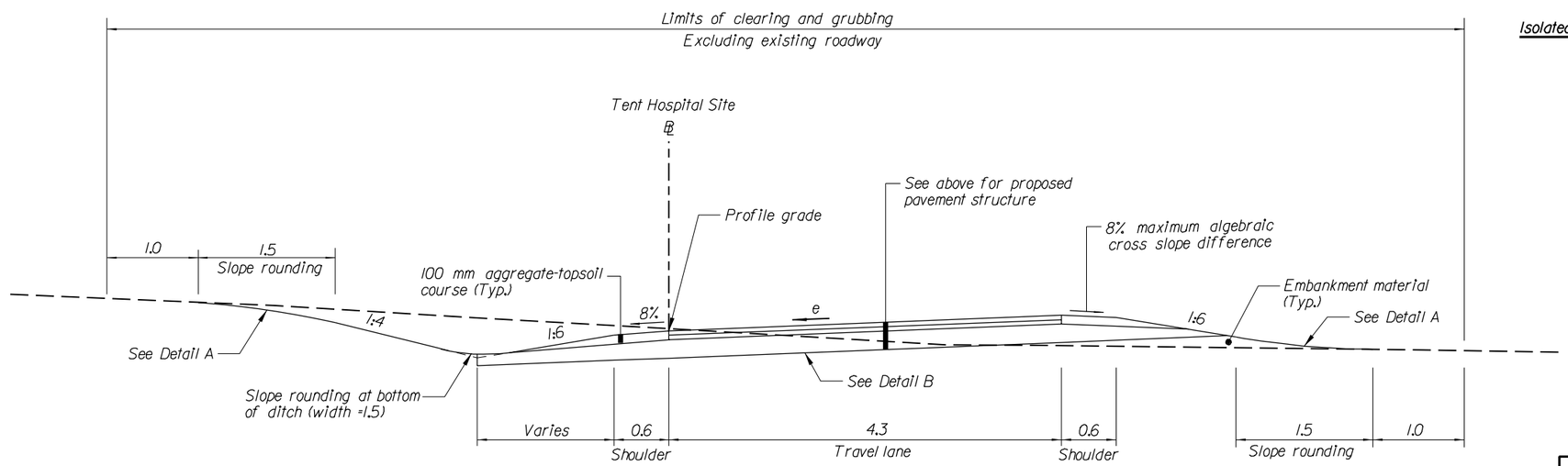

REALIGNMENT SECTION
(Superelevated)

No Scale

U.S. DEPARTMENT OF TRANSPORTATION
FEDERAL HIGHWAY ADMINISTRATION
EASTERN FEDERAL LANDS HIGHWAY DIVISION
STERLING, VIRGINIA

SHILOH NATIONAL MILITARY PARK

TYPICAL SECTIONS

TENT HOSPITAL ROAD
OPTION 1

SHEET 3 OF 5

6/11/2008 2:11:34 PM M:\Projects\shil\502(3)\proj_dev\CADD\typical.dgn

NPS NO.	REG	STATE	PROJECT	SHEET NO.
304 41,920	SE	TN	TEA-21 SHIL 502(3)	C-4

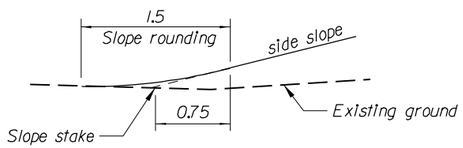

DETAIL A
Slope Rounding
(fill slope shown)

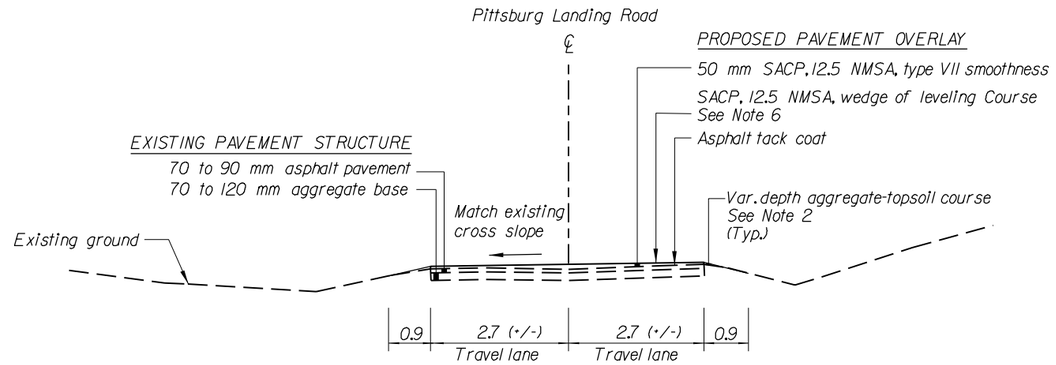

OVERLAY SECTION
(250+007 to 250+185)

NOTES:

1. Unless otherwise shown, all dimensions are in meters.
2. Place aggregate-topsoil course (var. depth), in accordance with Section 305, on all areas where the dropoff between the proposed overlay and existing shoulder exceeds 25 mm.
3. Place topsoil to a minimum depth of 100 mm on all disturbed areas, except paved areas and those with aggregate-topsoil course. See Section 624.
4. Seed all disturbed areas, except paved areas, in accordance with Section 625.
5. Break up the cleared ground surface beneath proposed embankment sections less than 1 meter in height to a minimum depth of 100 mm prior to placing embankment material. See Section 204.
6. Place asphalt wedge and leveling material, as needed, on overlay sections to ensure positive drainage exists across the roadway section.
7. Prior to overlay, clean and seal cracks in accordance with Section 414, as directed by the CO.

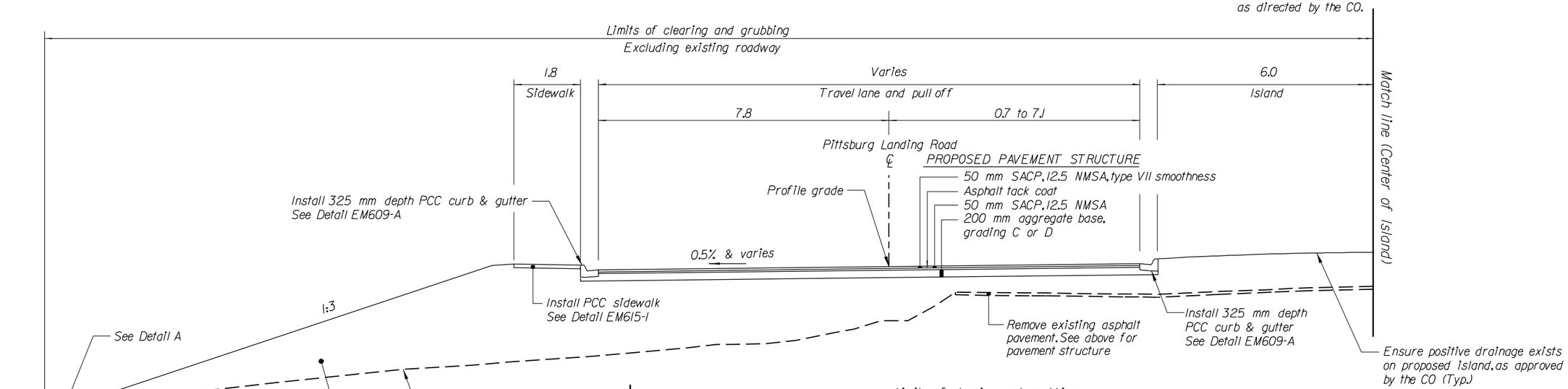

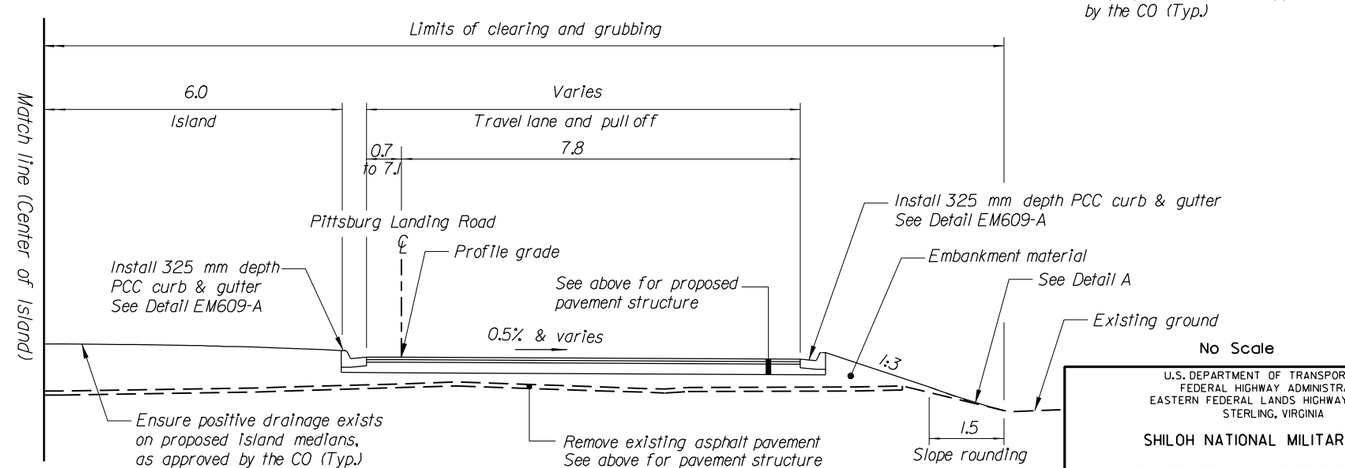

REALIGNMENT SECTION
(Turnaround with Island)

No Scale

U.S. DEPARTMENT OF TRANSPORTATION
FEDERAL HIGHWAY ADMINISTRATION
EASTERN FEDERAL LANDS HIGHWAY DIVISION
STERLING, VIRGINIA

SHILOH NATIONAL MILITARY PARK

TYPICAL SECTIONS

PITTSBURG LANDING ROAD
OPTION 2

6/11/2008 2:11:55 PM M:\Projects\sh\502(3)\proj_dev\CADD\typical.dgn

NPS NO.	REG	STATE	PROJECT	SHEET NO.
304 / 41,920	SE	TN	TEA-21 SHIL 502(3)	C-5

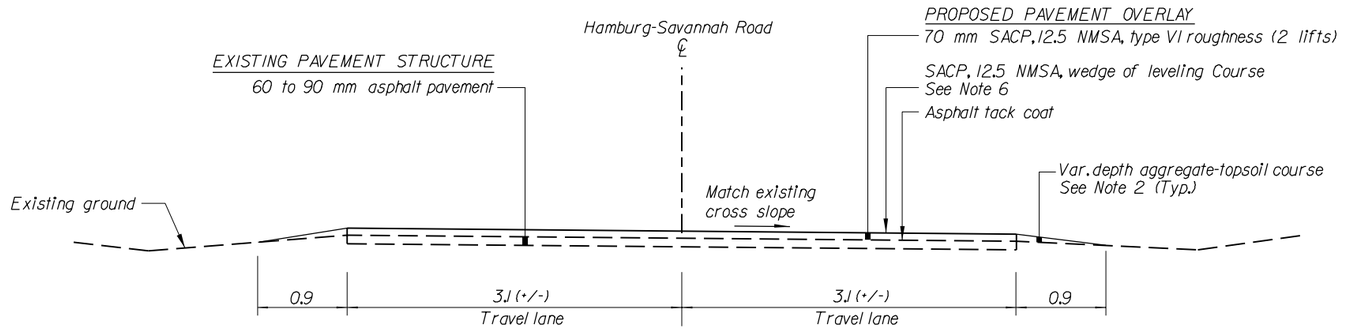

OVERLAY SECTION
80+400.0 to 82+114.6

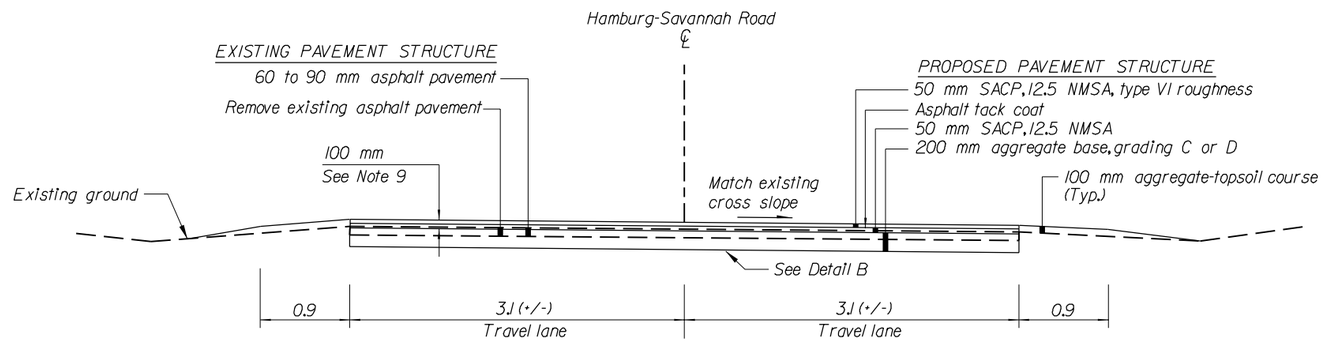

RECONSTRUCTION SECTION
80+000.0 to 80+400.0

NOTES:

1. Unless otherwise shown, all dimensions are in meters.
2. Place aggregate-topsoil course (var depth), in accordance with Section 305, on all areas where the dropoff between the proposed overlay and existing shoulder exceeds 25 mm.
3. Place topsoil to a minimum depth of 100 mm on all disturbed areas, except paved areas and those with aggregate-topsoil course. See Section 624.
4. Seed all disturbed areas, except paved areas, in accordance with Section 625.
5. Break up the cleared ground surface beneath proposed embankment sections less than 1 meter in height to a minimum depth of 100 mm prior to placing embankment material. See Section 204.
6. Place asphalt wedge and leveling material, as needed, on overlay sections to ensure positive drainage exists across the roadway section.
7. Clean and seal cracks in accordance with Section 414 prior to overlaying (no-pay).
8. Use the pavement structure found in the bus pulloff for all areas of full depth reconstruction along Hamburg-Savannah Road, including widening, paved pulloffs and pipe trench areas.
9. The proposed final pavement grade will be 100 mm higher than the existing pavement grade for the full-with reconstruction area. See Section 152 for construction survey and staking requirements.
10. Prior to overlay, clean and seal cracks in accordance to Section 414, as directed by the CO.

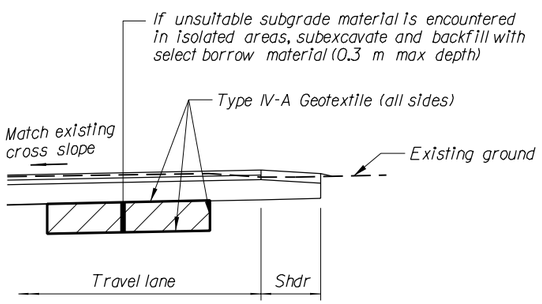

DETAIL B
Isolated Subexcavation Areas

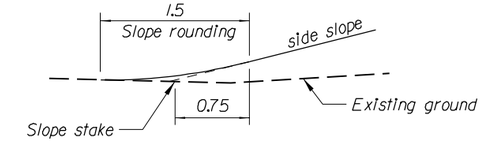

DETAIL A
Slope Rounding
(fill slope shown)

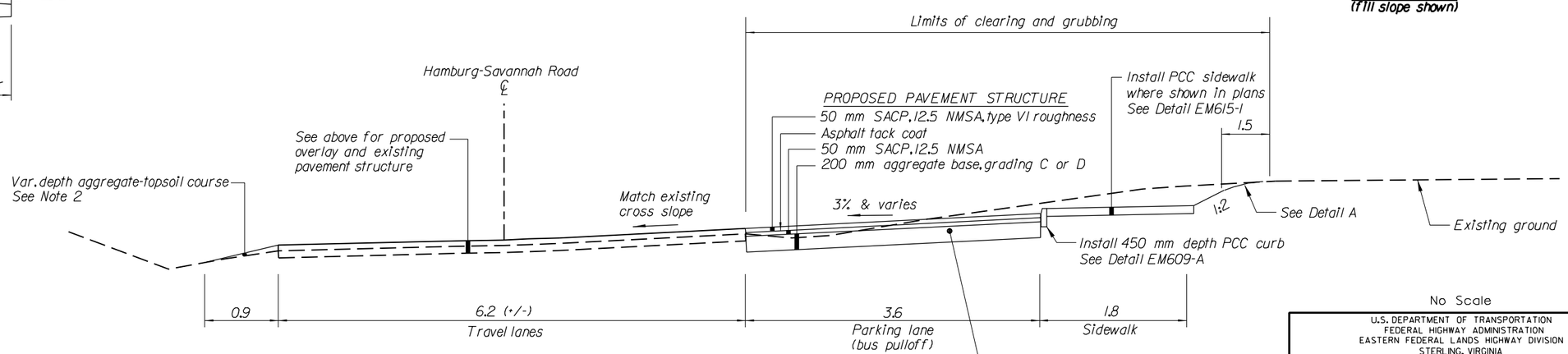

OVERLAY SECTION
(with pulloff)

Prior to paving, remove all tree roots and other organic material from the subgrade and compact according to Section 204.

No Scale

U.S. DEPARTMENT OF TRANSPORTATION
FEDERAL HIGHWAY ADMINISTRATION
EASTERN FEDERAL LANDS HIGHWAY DIVISION
STERLING, VIRGINIA

SHILOH NATIONAL MILITARY PARK

TYPICAL SECTIONS

HAMBURG-SAVANNAH ROAD
OPTION 3

SHEET 5 OF 5

6/11/2008 2:33:45 PM M:\Projects\shil\502(3)\proj_dev\CADD\typical.dgn

NPS NO.	REG	STATE	PROJECT	SHEET NO.
304 / 41,920	SE	TN	TEA-21 SHIL 502(3)	D-1

ITEM	DESCRIPTION	UNIT	Sherman / Cavalary Road	Woolf Field Road	Mc Clernand Road	ESTIMATED QUANTITIES PLAN	ESTIMATED QUANTITIES BID SCHEDULE
	PLAN SHEET SECTION -------->>						
15101-0000	Mobilization	LPSM				ALL	ALL
15201-0000	Construction survey and staking	LPSM				ALL	ALL
15401-0000	Contractor testing	LPSM				ALL	ALL
15705-0100	Soil erosion control, silt fence	m	4270	210	790	5270	5,270
15705-0400	Soil erosion control, earth berms	m	150			150	150
15705-1800	Soil erosion control, temporary diversion berm	m	60			60	60
15706-0200	Soil erosion control, check dam	Each	6	8	7	21	21
20101-0000	Clearing and grubbing	ha	1.6	0.1		1.7	1.7
20301-1200	Removal of headwall	Each	2			2	2
20301-2400	Removal of sign	Each	3			3	3
20302-2100	Removal of pipe culvert	m	70			70	70
20401-0000	Roadway excavation	m3	1420	280		1700	1,700
20402-0000	Subexcavation	m3	250	30		280	280
20403-0000	Unclassified borrow	m3	2950			2950	2,950
20410-0000	Select borrow (subexcavation areas)	m3	250	30		280	280
20701-1200	Earthwork geotextile, type IV-A	m2	1770	190		1960	1,960
20801-0000	Structure excavation	m3	440			440	440
20802-0000	Foundation fill	m3	45			45	45
21101-1000	Roadway obliteration, method 1	m2			1700	1700	1,700
25101-2000	Placed riprap, class 2	m3	3			3	3
25101-3000	Placed riprap, class 3	m3	166			166	170
30101-4000	Aggregate base grading C or D	t	6350	420		6770	6,770
30502-0700	Aggregate-topsoil course, 100mm depth	m2	2730	220		2950	2,950
40101-0500	Superpave pavement, 12.5mm nominal maximum size aggregate, *0.3 million ESAL , type III roughness (surface course)	t	1100	100		1200	1,200
40101-0500	Superpave pavement, 12.5mm nominal maximum size aggregate, *0.3 million ESAL (Base Course)	t	1100	100		1200	1,200
55201-0200	Structural concrete, class A (AE) (for structure)	m3	65			65	65
55201-0200	Structural concrete, class A (AE) (for footings)	m3	50			50	50

*0.3 million ESAL = < 0.3 million ESAL

U.S. DEPARTMENT OF TRANSPORTATION
FEDERAL HIGHWAY ADMINISTRATION
EASTERN FEDERAL LANDS HIGHWAY DIVISION
STERLING, VIRGINIA

SHILOH NATIONAL MILITARY PARK

TABULATION OF QUANTITIES

6/23/2008 1:40:38 PM M:\Projects\shl\502(3)\proj_dev\CADD\summary.dgn

NPS NO.	REG	STATE	PROJECT	SHEET NO.
304 / 41,920	SE	TN	TEA-21 SHIL 502(3)	D-2

ITEM	DESCRIPTION	UNIT	Sherman / Cavalary Road	Woolf Field Road	Mc Clernand Road	ESTIMATED QUANTITIES PLAN	ESTIMATED QUANTITIES BID SCHEDULE
	PLAN SHEET SECTION -------->>						
55201-0800	Structural concrete, class D (AE) (for bridge deck overlay)	m3	5			5	5
55202-1000	Structural concrete, class D (AE), for approach slabs, type 1	m2	70			70	70
55302-0400	Precast, prestressed concrete slabs, 36" voided	m	115			115	115
55401-1000	Reinforcing steel	kg	5659			5659	5,659
55401-2000	Reinforcing steel, epoxy coated	kg	875			875	875
55601-0700	Bridge railing, concrete, Natchez Trace Rail	m	38			38	38
56401-1000	Bearing device, elastomeric	Each	16			16	16
56501-0000	Drilled shafts , for 610 mm Diameter	m	275			275	275
60201-0600	450mm pipe culvert	m	80			80	80
60504-0000	Geocomposite sheet drain system	m2	96			96	96
60801-0500	Paved waterway, type 5	m2	330			330	330
62011-0300	Stone masonry headwall for 450mm pipe culvert	Each	12			12	12
62401-0300	Furnishing and placing topsoil, 100mm depth	m2	10950	370	1650	12970	12,970
62501-0000	Turf establishment	ha	1.6	0.1	0.20	1.9	1.9
62901-0500	Rolled erosion control product, type 2.A	m2	1920	60	175	2155	2,155
63304-0900	Signs, aluminum panels, type 3 sheeting	m2		2		2	2
63316-1000	Remove and reset sign	Each	4			4	4
63502-0600	Temporary traffic control, barricade type 3	Each	4	4		8	8
63503-0900	Temporary traffic control, snow fence	m	100			100	100
63504-1000	Temporary traffic control, construction sign	m2	5			5	5
63701-0000	Field office	Each	1			1	1

U.S. DEPARTMENT OF TRANSPORTATION
FEDERAL HIGHWAY ADMINISTRATION
EASTERN FEDERAL LANDS HIGHWAY DIVISION
STERLING, VIRGINIA

SHILOH NATIONAL MILITARY PARK

TABULATION OF QUANTITIES

6/23/2008 1:41:06 PM M:\Projects\shil\502(3)\proj_dev\CADD\summary.dgn

NPS NO.	REG	STATE	PROJECT	SHEET NO.
304 / 41,920	SE	TN	TEA-21 SHIL 502(3)	D-3

TENT HOSPITAL ROAD

ITEM	DESCRIPTION	UNIT	PLAN SHEET SECTION -------->>	ESTIMATED QUANTITIES PLAN	ESTIMATED QUANTITIES BID SCHEDULE
15101-0000	Mobilization	LPSM		ALL	ALL
15201-0000	Construction survey and staking	LPSM		ALL	ALL
15401-0000	Contractor testing	LPSM		ALL	ALL
15705-0100	Soil erosion control, silt fence	m	610	610	610
15706-0200	Soil erosion control, check dam	Each	6	6	6
20101-0000	Clearing and grubbing	ha	0.3	0.3	0.3
20301-1100	Removal of gate	Each	1	1	1
20301-2400	Removal of sign	Each	2	2	2
20303-1600	Removal of pavement, asphalt	m2	730	730	730
20401-0000	Roadway excavation	m3	620	620	620
20402-0000	Subexcavation	m3	50	50	50
20410-0000	Select borrow	m3	50	50	50
20701-1200	Earthwork geotextile, type IV-A	m2	340	340	340
20802-0000	Foundation fill	m3	15	15	15
21101-1000	Roadway obliteration, method 1	m2	250	250	250
30101-4000	Aggregate base grading C or D	t	1190	1190	1,190
30502-0700	Aggregate-topsoil course, 100mm depth	m2	450	450	450
40101-0500	Superpave pavement, 12.5mm nominal maximum size aggregate, *0.3 million ESAL , type III roughness (suface course)	t	215	215	215
40101-0500	Superpave pavement, 12.5mm nominal maximum size aggregate, *0.3 million ESAL (base course)	t	215	215	215
60201-0600	450mm pipe culvert	m	30	30	30
60403-1200	Inlet, type 5A	Each	2	2	2
62011-0300	Stone masonry headwall for 450mm pipe culvert	Each	2	2	2
62401-0300	Furnishing and placing topsoil, 100mm depth	m2	1600	1600	1,600
62501-0000	Turf establishment	ha	0.25	0.3	0.3
62901-0500	Rolled erosion control product, type 2.A	m2	210	210	210
63304-0900	Signs, aluminum panels, type 3 sheeting	m2	1	1	1
63316-1000	Remove and reset sign	Each	2	2	2
63502-0600	Temporary traffic control, barricade type 3	Each	2	2	2
63503-0900	Temporary traffic control, snow fence	m	50	50	50
63504-1000	Temporary traffic control, construction sign	m2	4	4	4

*0.3 million ESAL = < 0.3 million ESAL

U.S. DEPARTMENT OF TRANSPORTATION
FEDERAL HIGHWAY ADMINISTRATION
EASTERN FEDERAL LANDS HIGHWAY DIVISION
STERLING, VIRGINIA

SHILOH NATIONAL MILITARY PARK

TABULATION OF QUANTITIES

OPTION 1

6/23/2008 1:41:40 PM M:\Projects\shi\502(3)\proj_dev\CADD\summary.dgn

NPS NO.	REG	STATE	PROJECT	SHEET NO.
304 / 41,920	SE	TN	TEA-21 SHIL 502(3)	D-4

PITTSBURG LANDING ROAD

ITEM	DESCRIPTION	UNIT	PLAN SHEET SECTION -------->>	ESTIMATED QUANTITIES PLAN	ESTIMATED QUANTITIES BID SCHEDULE
15101-0000	Mobilization	LPSM		ALL	ALL
15201-0000	Construction survey and staking	LPSM		ALL	ALL
15401-0000	Contractor testing	LPSM		ALL	ALL
15705-0100	Soil erosion control, silt fence	m	190	190	190
20101-0000	Clearing and grubbing	ha	0.2	0.2	0.2
20301-1400	Removal of inlet	Each	1	1	1
20302-0500	Removal of curb, concrete	m	35	35	35
20302-2100	Removal of pipe culvert	m	10	10	10
20303-1400	Removal of paved waterway, concrete	m2	60	60	60
20303-1600	Removal of pavement, asphalt	m2	750	750	750
20303-3200	Removal of sidewalk, concrete	m2	130	130	130
20304-1000	Removal of structures and obstructions	LPSM		ALL	ALL
20401-0000	Roadway excavation	m3	120	120	120
20403-0000	Unclassified borrow	m3	820	820	820
20420-0000	Embankment construction (Interface)	m3	530	530	530
20701-0200	Earthwork geotextile, type I-B (Interface)	m2	1350	1350	1,350
20802-0000	Foundation fill	m3	2	2	2
25101-2000	Placed riprap, class 2	m3	2	2	2
25101-4000	Placed riprap, class 4	m3	230	230	230
30101-0000	Aggregate base (grading A or B, and No. 78 stone) Interface	†	50	50	50
30101-0000	Aggregate base (grading A & B) Interface	†	200	200	200
30101-4000	Aggregate base grading C or D	†	530	530	530
30502-0000	Aggregate-topsoil course (variable depth)	m2	340	340	340
40101-0500	Superpave pavement, 12.5mm nominal maximum size aggregate, *0.3 million ESAL , type VII smoothness (surface course)	†	240	240	240
40101-0500	Superpave pavement, 12.5mm nominal maximum size aggregate, *0.3 million ESAL (base course)	†	240	240	240
40102-0500	Superpave pavement, 12.5mm nominal maximum size aggregate, *0.3 million ESAL, wedge and leveling course	†	20	20	20

*0.3 million ESAL = < 0.3 million ESAL

U.S. DEPARTMENT OF TRANSPORTATION
FEDERAL HIGHWAY ADMINISTRATION
EASTERN FEDERAL LANDS HIGHWAY DIVISION
STERLING, VIRGINIA

SHILOH NATIONAL MILITARY PARK

TABULATION OF QUANTITIES

OPTION 2

6/23/2008 2:13:22 PM M:\Projects\shil\502(3)\proj_dev\CADD\summary.dgn

NPS NO.	REG	STATE	PROJECT	SHEET NO.
304 / 41,920	SE	TN	TEA-21 SHIL 502(3)	D-5

PITTSBURG LANDING ROAD

PLAN SHEET SECTION -------->>				ESTIMATED QUANTITIES	
ITEM	DESCRIPTION	UNIT		PLAN	BID SCHEDULE
41410-1000	Crack, cleaning and sealing	m	75	75	75
60201-0600	450mm pipe culvert	m	4	4	4
60403-1700	Inlet, type 6A	Each	1	1	1
60902-1100	Curb and gutter, concrete, 325mm depth	m	180	180	180
61501-0100	Sidewalk, concrete	m2	115	115	115
62011-0300	Stone masonry headwall for 450mm pipe culvert	Each	2	2	2
62401-0200	Furnishing and placing topsoil, 75mm depth (Interface)	m2	1450	1450	1,450
62401-0300	Furnishing and placing topsoil, 100mm depth	m2	980	980	980
62501-0000	Turf establishment	ha	0.25	0.3	0.3
62901-0500	Rolled erosion control product, type 2.A	m2	135	135	135
63304-0900	Signs, aluminum panels, type 3 sheeting	m2	1	1	1
63401-0300	Pavement markings, type B, solid	m	25	25	25
63502-0600	Temporary traffic control, barricade type 3	Each	2	2	2

U.S. DEPARTMENT OF TRANSPORTATION
FEDERAL HIGHWAY ADMINISTRATION
EASTERN FEDERAL LANDS HIGHWAY DIVISION
STERLING, VIRGINIA

SHILOH NATIONAL MILITARY PARK

TABULATION OF QUANTITIES

OPTION 2

6/23/2008 2:13:48 PM M:\Projects\shil\502(3)\proj_dev\CADD\summary.dgn

NPS NO.	REG	STATE	PROJECT	SHEET NO.
304 / 41,920	SE	TN	TEA-21 SHIL 502(3)	D-6

HAMBURG - SAVANNAH ROAD

ITEM	DESCRIPTION	UNIT	PLAN SHEET SECTION -------->>	ESTIMATED QUANTITIES PLAN	ESTIMATED QUANTITIES BID SCHEDULE
15101-0000	Mobilization	LPSM		ALL	ALL
15201-0000	Construction survey and staking	LPSM		ALL	ALL
15401-0000	Contractor testing	LPSM		ALL	ALL
15705-0100	Soil erosion control, silt fence	m	1230	1230	1,230
15706-0200	Soil erosion control, check dam	Each	4	4	4
20101-0000	Clearing and grubbing	ha	0.1	0.1	0.1
20301-1200	Removal of headwall	Each	4	4	4
20301-1400	Removal of inlet	Each	2	2	2
20301-2400	Removal of sign	Each	7	7	7
20302-2100	Removal of pipe culvert	m	36	36	36
20303-1400	Removal of paved waterway, concrete	m2	6	6	7
20303-1600	Removal of pavement, asphalt	m2	4210	4210	4,210
20401-0000	Roadway excavation	m3	740	740	740
20402-0000	Subexcavation	m3	100	100	100
20410-0000	Select borrow	m3	110	110	110
20701-1200	Earthwork geotextile, type IV-A	m2	710	710	710
20802-0000	Foundation fill	m3	10	10	10
21101-1000	Roadway obliteration, method 1	m2	1240	1240	1,240
25101-2000	Placed riprap, class 2	m3	5	5	5
30101-4000	Aggregate base grading C or D	t	1960	1960	1,960
30302-1000	Ditch reconditioning	m	5	5	5
30502-0000	Aggregate-topsoil course (variable depth)	m2	3250	3250	3,250
30502-0700	Aggregate-topsoil course, 100mm depth	m2	940	940	940
40101-0500	Superpave pavement, 12.5mm nominal maximum size aggregate, *0.3 million ESAL , type VI roughness (surface course)	t	2400	2400	2,400
40101-0500	Superpave pavement, 12.5mm nominal maximum size aggregate, *0.3 million ESAL (base course)	t	520	520	520
40102-0500	Superpave pavement, 12.5mm nominal maximum size aggregate, *0.3 million ESAL, wedge and leveling course	t	210	210	210

*0.3 million ESAL = < 0.3 million ESAL

U.S. DEPARTMENT OF TRANSPORTATION
FEDERAL HIGHWAY ADMINISTRATION
EASTERN FEDERAL LANDS HIGHWAY DIVISION
STERLING, VIRGINIA

SHILOH NATIONAL MILITARY PARK

TABULATION OF QUANTITIES

OPTION 3

6/23/2008 2:14:12 PM M:\Projects\shil\502(3)\proj_dev\CADD\summary.dgn

NPS NO.	REG	STATE	PROJECT	SHEET NO.
304 / 41,920	SE	TN	TEA-21 SHIL 502(3)	D-7

HAMBURG - SAVANNAH ROAD

PLAN SHEET SECTION -------->>				ESTIMATED QUANTITIES	
ITEM	DESCRIPTION	UNIT		PLAN	BID SCHEDULE
41410-1000	Crack, cleaning and sealing	m	75	75	75
41501-0000	Paving geotextile	m2	320	320	320
60201-0600	450mm pipe culvert	m	20	20	20
60705-0000	Reconditioning drainage structure	Each	1	1	1
60801-0400	Paved waterway, type 4	m2	7	7	7
60901-1700	Curb, concrete, 450mm depth	m	70	70	70
61501-0100	Sidewalk, concrete	m2	100	100	100
62011-0300	Stone masonry headwall for 450mm pipe culvert	Each	2	2	2
62401-0300	Furnishing and placing topsoil, 100mm depth	m2	1190	1190	1,190
62501-0000	Turf establishment	ha	0.55	0.6	0.6
62901-0500	Rolled erosion control product, type 2.A	m2	520	520	520
63304-0900	Signs, aluminum panels, type 3 sheeting	m2	3	3	3
63502-0700	Temporary traffic control, cone	Each	70	70	70
63502-1300	Temporary traffic control, drum	Each	40	40	40
63503-0900	Temporary traffic control, snow fence	m	100	100	100
63504-1000	Temporary traffic control, construction sign	m2	15	15	15
63506-0500	Temporary traffic control, flagger	Hour	470	470	470

6/23/2008 2:40:07 PM M:\Projects\sh\1502(3)\proj_dev\CADD\summary.dgn

U.S. DEPARTMENT OF TRANSPORTATION
FEDERAL HIGHWAY ADMINISTRATION
EASTERN FEDERAL LANDS HIGHWAY DIVISION
STERLING, VIRGINIA

SHILOH NATIONAL MILITARY PARK

TABULATION OF QUANTITIES

OPTION 3

NPS NO.	REG	STATE	PROJECT	SHEET NO.
304 / 41,920	SE	TN	TEA-21 SHIL 502(3)	E-1

ROADWAY	STATION TO STATION	LENGTH	
		METERS	KILOMETERS
SHERMAN / CAVALRY ROAD	500+000.0 to 502+160.4	2,160.4	2.160
WOOLF FIELD ROAD	100+002.8 to 100+171.7	168.9	0.169
	TOTAL	2,329.3	2.329

ROADWAY	STATION TO STATION	LENGTH	
		METERS	KILOMETERS
TENT HOSPITAL ROAD – OPTION 1	90+003.2 t0 90+356.5	353.3	0.353

ROADWAY	STATION TO STATION	LENGTH	
		METERS	KILOMETERS
PITTSBURG LANDING ROAD – OPTION 2	250+007.0 to 250+293.7	286.7	0.287

ROADWAY	STATION TO STATION	LENGTH	
		METERS	KILOMETERS
HAMBURG – SAVANNAH ROAD – OPTION 3	80+000.0 to 82+114.6	2,114.6	2.115

U.S. DEPARTMENT OF TRANSPORTATION
FEDERAL HIGHWAY ADMINISTRATION
EASTERN FEDERAL LANDS HIGHWAY DIVISION
STERLING, VIRGINIA

SHILOH NATIONAL MILITARY PARK

DISTANCE TABULATION

5/30/2008 10:01:08 AM M:\Projects\shil\502(3)\proj_dev\CADD\summary.dgn

NPS NO.	REG	STATE	PROJECT	SHEET NO.
304 / 41,920	SE	TN	TEA-21 SHIL 502(3)	E-2

LOCATION	PAY ITEM 20401–0000 ROADWAY EXCAVATION (m3)	PAY ITEM 20403–0000 UNCLASSIFIED BORROW (m3)
SHERMAN / CAVALRY ROAD	1,345	2,790
WOOLF FIELD ROAD	265	–
TOTAL	1,610	2,790
ROUNDED TOTAL	1,700	2,950

TENT HOSPITAL ROAD – OPTION 1	587	–
ROUNDED TOTAL	620	–

PITTSBURG LANDING ROAD – OPTION 2	110	783
ROUNDED TOTAL	120	820

HAMBURG – SAVANNAH ROAD – OPTION 3	701	–
ROUNDED TOTAL	740	–

U.S. DEPARTMENT OF TRANSPORTATION
FEDERAL HIGHWAY ADMINISTRATION
EASTERN FEDERAL LANDS HIGHWAY DIVISION
STERLING, VIRGINIA

SHILOH NATIONAL MILITARY PARK

EARTHWORK SUMMARY

5/30/2008 10:01:39 AM M:\Projects\shil\502(3)\proj_dev\CADD\summary.dgn

NPS NO.	REG	STATE	PROJECT	SHEET NO.
304 / 41,920	SE	TN	TEA-21 SHIL 502(3)	E-3

Pipe #	Roadway*	Station	Pay Item **20301-1200** Removal of headwall (Each)	Pay Item **20301-1400** Removal of inlets (Each)	Pay Item **20302-2100** Removal of pipe culverts (m)	Pay Item **20303-1400** Removal of PCC paved waterway (m^2)	Pay Item **25101-2000** Place riprap class 2 (m^3)	Pay Item **25101-3000** Place riprap class 3 (m^3)	Pay Item **30302-1000** Ditch Reconditioning (m)	Pay Item **60201-0600** 450 mm pipe culvert (m)	Pay Item **60403-1200** Inlet, type 5A (Each)	Pay Item **60403-1700** Inlet, type 6A (Each)	Pay Item **60705-0000** Reconditioning drainage structures (Each)	Pay Item **60801-0400** Paved waterway, type 4 (m^2)	Pay Item **60801-0500** Paved waterway, type 5 (m^2)	Pay Item **62011-0300** Stone masonry headwall 450 mm (Each)
SHERMAN / CAVALRY ROAD																
D-8	SCR	500+420.0					1.4			12.3						2
	SCR	500+424.8			17											
	SCR	500+559.1			8.5		1.4									
D-9	SCR	500+560.0								12.0						2
	SCR	500+607.0			8.5											
D-10	SCR	500+900.0								13.8						2
	SCR	501+150 to 501+220 (RT)						2.0							63	
	SCR	501+241 to 501+256						160.0								
	SCR	501+270 to 501+400 (RT)						2.0							117	
	SCR	501+280 to 501+440 (LT)						2.0							144	
	SCR	501+379.3			8.5											
	SCR	501+497.9	2 *		8.5											
D-11	SCR	501+503.8								14.3						2
	SCR	501+653.8			8.2											
D-12	SCR	501+660.0								12.1						2
D-13	SCR	501+960.0								11.1						2
	SCR	501+961.8			7.5											
TOTAL			**2 ***		**67**		**2.8**	**166.0**		**75.6**					**324.0**	**12**
ROUNDED TOTAL			**2 ***		**70**		**3**	**170**		**80**					**330**	**12**

*** One stone well inlet and one stone headwall at 501+ 497.9**

TENT HOSPITAL SITE ROAD - OPTION 1																
D-15	THR	90+060.0								13.6	1					1
D-16	THR	90+300.0								12.3	1					1
TOTAL										**25.9**	**2**					**2**
ROUNDED TOTAL										**30**	**2**					**2**

PITTSBURG LANDING ROAD - OPTION 2																
	PLR	250+166.2														1
	PLR	250+182.6 to END				57										
	PLR	250+224.6		1	3.7											
D-7	PLR	250+236.0					1.7			3.1		1				1
	PLR	250+256.5			3.5											
TOTAL				**1**	**7**	**57.0**	**1.7**			**3.1**		**1**				**2**
ROUNDED TOTAL				**1**	**10**	**60**	**2**			**4**		**1**				**2**

HAMBURG - SAVANNAH ROAD - OPTION 3																
	HSR	80+575.0				6	2.8							6		
	HSR	80+622.0	1	1	11											
	HSR	80+661.3	2		4											
	HSR	80+716.7							5				1			
D-14	HSR	80+990.9								16.6						2
	HSR	80+991.4	1	1	19											
	HSR	81+196.0					1.4									
TOTAL			**4**	**2**	**34**	**6.0**	**4.2**		**5**	**16.6**			**1**	**6**		**2**
ROUNDED TOTAL			**4**	**2**	**36**	**10**	**5**		**5**	**20**			**1**	**7**		**2**

PLR = PITTSBURG LANDING ROAD

SCR = SHERMAN / CAVALRY ROAD

HSR = HAMBURG - SAVANNAH ROAD

THR = TENT HOSPITAL ROAD

Notes:

1. *See Drainage Cross Sections for more details.*
2. *See Detail M602-7 for pipe installation details.*
3. *See Detail M604-5 & M604-6 for inlet, type 5A installation details.*
4. *See Detail EM604-05 for inlet, type 6A installation details.*

U.S. DEPARTMENT OF TRANSPORTATION
FEDERAL HIGHWAY ADMINISTRATION
EASTERN FEDERAL LANDS HIGHWAY DIVISION
STERLING, VIRGINIA

SHILOH NATIONAL MILITARY PARK

DRAINAGE SUMMARY

6/23/2008 9:23:18 AM M:\Projects\shil\502(3)\proj_dev\CADD\summary.dgn

NPS NO.	REG	STATE	PROJECT	SHEET NO.
304 / 41,920	SE	TN	TEA-21 SHIL 502(3)	E-4

Sign No.	Text No.	Sign Text	LOCATION Station	LOCATION Side	PANEL SIZE Width mm	PANEL SIZE Height mm	PANEL SIZE Area m^2	PANEL SIZE Corner Radii mm	PANEL SIZE Border Width mm	PANEL SIZE Margin Width mm	TEXT SIZE Numbers mm	TEXT SIZE Upper Case mm	TEXT SIZE Lower Case mm	TEXT SIZE Series	Color Combination	Quantity	Total Area m^2	Steel Support (No Pay) m	Remarks
1	R1-1		WFR: 100+005 & 100+010	-	750	750	0.56	←	—	—	See	Note 2	—	→	White on Red	2	1.12	1(4.3) =4.3	Single 50 mm x 50 mm post (weathering steel)
															Total	2	1.12	4.3	
															Rounded Total	2	2	5	

NOTES:

1. Supports shall be in accordance with Standard Detail EM633-01 and EM633-02.
2. See "Manual on Uniform Traffic Control Devices" and "Standard Highway Signs" for dimensions.

ABBREVIATION:

WFR= Woolf Field Road

U.S. DEPARTMENT OF TRANSPORTATION
FEDERAL HIGHWAY ADMINISTRATION
EASTERN FEDERAL LANDS HIGHWAY DIVISION
STERLING, VIRGINIA

SHILOH NATIONAL MILITARY PARK

PERMANENT SIGN SCHEDULE

5/31/2008 2:47:07 PM M:\Projects\shil\502(3)\proj_dev\CAD\permsign.dgn

NPS NO.	REG	STATE	PROJECT	SHEET NO.
304 41,920	SE	TN	TEA-21 SHIL 502(3)	E-5

Sign No.	Text No.	Sign Text	LOCATION		PANEL SIZE						TEXT SIZE				Color Combination	Quantity	Total Area	Steel Support (No Pay)	Remarks
			Station	Side	Width mm	Height mm	Area m^2	Corner Radii mm	Border Width mm	Margin Width mm	Numbers mm	Upper Case mm	Lower Case mm	Series			m^2	m	
1	R1-2	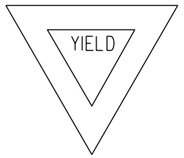	THR 90+356 = HSR 80+296	-	900	900	0.35	←			See	Note 2		→	Red on White	1	0.35	-	Mount on the back of existing sign
2	R5-1	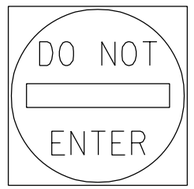	THR 90+356 = HSR 80+296;	-	750	750	0.56	←			See	Note 2		→	White on Red	1	0.56	1(4.3) = 4.3	Single 50 mm x 50 mm post (weathering steel)
															Total	2	0.91	4.3	
															Rounded Total	2	1	5	

NOTES:

1. Supports shall be in accordance with Standard Detail EM633-01 and EM633-02.
2. See "Manual on Uniform Traffic Control Devices" and "Standard Highway Signs" for dimensions.

ABBREVIATION:

THR= Tent Hospital Road
HSR= Hamburg-Savannah Road

U.S. DEPARTMENT OF TRANSPORTATION
FEDERAL HIGHWAY ADMINISTRATION
EASTERN FEDERAL LANDS HIGHWAY DIVISION
STERLING, VIRGINIA

SHILOH NATIONAL MILITARY PARK

PERMANENT SIGN SCHEDULE

OPTION 1

6/6/2008 12:05:20 PM M:\Projects\shil\50213\proj_dev\CAD\permsign.dgn

NPS NO.	REG	STATE	PROJECT	SHEET NO.
304 / 41,920	SE	TN	TEA-21 SHIL 502(3)	E-6

Sign No.	Text No.	Sign Text	LOCATION Station	LOCATION Side	PANEL SIZE Width mm	PANEL SIZE Height mm	PANEL SIZE Area m^2	PANEL SIZE Corner Radii mm	PANEL SIZE Border Width mm	PANEL SIZE Margin Width mm	TEXT SIZE Numbers mm	TEXT SIZE Upper Case mm	TEXT SIZE Lower Case mm	TEXT SIZE Series	Color Combination	Quantity	Total Area m^2	Steel Support (No Pay) m	Remarks
1	W14-1	DEAD END	PLR: 250+008	-	750	750	0.56	←			See Note 2			→	Black on Yellow	1	0.56	1(4.3) =4.3	Single 50 mm x 50 mm post (weathering steel)
															Total	1	0.56	4.3	
															Rounded Total	1	1	5	

NOTES:

1. Supports shall be in accordance with Standard Detail EM633-01 and EM633-02.
2. See "Manual on Uniform Traffic Control Devices" and "Standard Highway Signs" for dimensions.

ABBREVIATION:

PLR = Pittsburg Landing Road

U.S. DEPARTMENT OF TRANSPORTATION
FEDERAL HIGHWAY ADMINISTRATION
EASTERN FEDERAL LANDS HIGHWAY DIVISION
STERLING, VIRGINIA

SHILOH NATIONAL MILITARY PARK

PERMANENT SIGN SCHEDULE

OPTION 2

5/30/2008 10:09:53 AM M:\Projects\shil\502(3)\proj_dev\CAD\permsign.dgn

NPS NO.	REG	STATE	PROJECT	SHEET NO.
304 / 41,920	SE	TN	TEA-21 SHIL 502(3)	E-7

Sign No.	Text No.	Sign Text	LOCATION Station	LOCATION Side	PANEL SIZE Width mm	PANEL SIZE Height mm	PANEL SIZE Area m^2	PANEL SIZE Corner Radii mm	PANEL SIZE Border Width mm	PANEL SIZE Margin Width mm	TEXT SIZE Numbers mm	TEXT SIZE Upper Case mm	TEXT SIZE Lower Case mm	TEXT SIZE Series	Color Combination	Quantity	Total Area m^2	Steel Support (No Pay) m	Remarks
1	R1-1	STOP	HSR: 80+406	-	750	750	0.56	←			See Note 2			→	White on Red	3	1.68	3(4.3) = 12.9	Single 50 mm x 50 mm post (weathering steel)
2	R2-1	SPEED LIMIT 25	HSR: 80+072	-	600	900	0.54	←			See Note 2			→	Black on White	1	0.54	1(5.1) = 5.1	Single 50 mm x 50 mm post (weathering steel)
3	Special	Cars Only	Entrance of Tour Stop #13	-	450	450	0.20	63	19	45		94	63	NPS Modified Clarendon	White on Brown	1	0.20	1(3.0) = 3.0	Single 50 mm x 50 mm post (weathering steel)
4	Special	PARK CLOSED AT DARK	HSR: 80+072	-	450	600	0.27	56	16	9	-	3	-	C	Black On White	1	0.27	-	Mount under sign no.3
															Subtotal	6	2.69	21	
															Rounded Total	6	3	25	

NOTES:

1. Supports shall be in accordance with Standard Detail EM633-01 and EM633-02.
2. See "Manual on Uniform Traffic Control Devices" and "Standard Highway Signs" for dimensions.

ABBREVIATION:

HSR= Hamburg-Savannah Road

U.S. DEPARTMENT OF TRANSPORTATION
FEDERAL HIGHWAY ADMINISTRATION
EASTERN FEDERAL LANDS HIGHWAY DIVISION
STERLING, VIRGINIA
SHILOH NATIONAL MILITARY PARK

PERMANENT SIGN SCHEDULE

OPTION 3

5/30/2008 10:01:5 AM M:\Projects\shil\502(3)\proj_dev\CAD\permsign.dgn

NPS NO.	REG	STATE	PROJECT	SHEET NO.
304 / 41,920	SE	TN	TEA-21 SHIL 502(2)	E-8

Sign No.	Text No.	Sign Text	LOCATION Station	LOCATION Side	PANEL SIZE Width mm	PANEL SIZE Height mm	PANEL SIZE Area m^2	PANEL SIZE Corner Radii mm	PANEL SIZE Border Width mm	PANEL SIZE Margin Width mm	TEXT SIZE Numbers mm	TEXT SIZE Upper Case mm	TEXT SIZE Lower Case mm	TEXT SIZE Series	Color Combination	Quantity	Total Area m^2	Wood Support (No Pay) m	Remarks
1	G20-2	END ROAD WORK	See Note 3		900	450	0.41	←			See Note 2			→	Black on Orange	1	0.41	2(3.0) = 6.0	Double 100 mm x 100 mm post
2	R11-2	ROAD CLOSED	See Note 4		1200	750	0.90	←			See Note 2			→	Black on White	2	1.80	-	Mound on Type III barricades
3	W13-1	20 M.P.H.	See Note 3		600	600	0.36	←			See Note 2			→	Black on Orange	1	0.36	-	Mount under sign #6
4	W20-1	ROAD WORK AHEAD	See Note 3		900	900	0.81	←			See Note 2			→	Black on Orange	1	0.81	2(4.0) = 8.0	Double 100 mm x 100 mm post
5	W21-1A		See Note 3		900	900	0.81	←			See Note 2			→	Black on Orange	1	0.81	-	Portable sign
6	W21-5	SHOULDER WORK	See Note 3		900	900	0.81	←			See Note 2			→	Black on Orange	1	0.81	-	Portable sign
															Total	7	5	14	
															Rounded Total	8	5	15	

NOTES:

1. Supports shall be in accordance with Det. EM635-01.
2. See "Manual on Uniform Traffic Control Devices" and "Standard Highway Signs" for dimensions.
3. See Detail EM635-10.
4. See Traffic Control Narrative.

U.S. DEPARTMENT OF TRANSPORTATION
FEDERAL HIGHWAY ADMINISTRATION
EASTERN FEDERAL LANDS HIGHWAY DIVISION
STERLING, VIRGINIA

SHILOH NATIONAL MILITARY PARK

CONSTRUCTION SIGN SCHEDULE

m:\projects\shi\50211\proj_dev\cadd\consignd.gn
6/9/2008

NPS NO.	REG	STATE	PROJECT	SHEET NO.
304 / 41,920	SE	TN	TEA-21 SHIL 502(3)	E-9

Sign No.	Text No.	Sign Text	LOCATION Station	LOCATION Side	PANEL SIZE Width mm	PANEL SIZE Height mm	PANEL SIZE Area m^2	PANEL SIZE Corner Radii mm	PANEL SIZE Border Width mm	PANEL SIZE Margin Width mm	TEXT SIZE Numbers mm	TEXT SIZE Upper Case mm	TEXT SIZE Lower Case mm	TEXT SIZE Series	Color Combination	Quantity	Total Area m^2	Wood Support (No Pay) m	Remarks
1	G20-2	END ROAD WORK	See Note 3		900	450	0.41	←			See Note 2			→	Black on Orange	1	0.41	2(3.0) = 6.0	Double 100 mm x 100 mm post
2	W13-1	20 M.P.H.	See Note 3		600	600	0.36	←			See Note 2			→	Black on Orange	1	0.36	-	Mount under sign #5
3	W20-1	ROAD WORK AHEAD	See Note 3		900	900	0.81	←			See Note 2			→	Black on Orange	1	0.81	2(4.0) = 8.0	Double 100 mm x 100 mm post
4	W21-1A		See Note 3		900	900	0.81	←			See Note 2			→	Black on Orange	1	0.81	-	Portable sign
5	W21-5	SHOULDER WORK	See Note 3		900	900	0.81	←			See Note 2			→	Black on Orange	1	0.81	-	Portable sign
															Total	5	3.2	14	
															Rounded Total	5	4	15	

NOTES:

1. Supports shall be in accordance with Det. EM635-01.
2. See "Manual on Uniform Traffic Control Devices" and "Standard Highway Signs" for dimensions.
3. See Detail M635-10.
4. See Traffic Control Narrative.

U.S. DEPARTMENT OF TRANSPORTATION
FEDERAL HIGHWAY ADMINISTRATION
EASTERN FEDERAL LANDS HIGHWAY DIVISION
STERLING, VIRGINIA

SHILOH NATIONAL MILITARY PARK

CONSTRUCTION SIGN SCHEDULE

OPTION 1

m:\projects\sh\502(1)\proj_dev\cadd\consignudgn
6/9/2008

NPS NO.	REG	STATE	PROJECT	SHEET NO.
304 / 41,920	SE	TN	TEA-21 SHIL 502(3)	E-10

Sign No.	Text No.	Sign Text	LOCATION Station	LOCATION Side	PANEL SIZE Width mm	PANEL SIZE Height mm	PANEL SIZE Area m^2	PANEL SIZE Corner Radii mm	PANEL SIZE Border Width mm	PANEL SIZE Margin Width mm	TEXT SIZE Numbers mm	TEXT SIZE Upper Case mm	TEXT SIZE Lower Case mm	TEXT SIZE Series	Color Combination	Quantity	Total Area m^2	Wood Support (No Pay) m	Remarks
1	G20-2	END ROAD WORK	See Note 3		900	450	0.41	←			See Note 2			→	Black on Orange	4	1.64	4(3.0) = 12.0	Double 100 mm x 100 mm post
2	W13-1	20 M.P.H.	See Note 3		600	600	0.36	←			See Note 2			→	Black on Orange	4	1.44	-	Mount under signs #5 & 8
3	W16-2	500 FEET	See Note 3		600	450	0.27	←			See Note 2			→	Black on Orange	2	0.54	-	Mount under sign #6
4	W20-1	ROAD WORK AHEAD	See Note 3		900	900	0.81	←			See Note 2			→	Black on Orange	4	3.24	4(4.0) = 16.0	Double 100 mm x 100 mm post
5	W20-4	ONE LANE ROAD AHEAD	See Note 3		900	900	0.81	←			See Note 2			→	Black on Orange	2	1.62	-	Portable sign
6	W20-7A		See Note 3		900	900	0.81	←			See Note 2			→	Black on Orange	2	1.62	-	Portable sign
7	W21-1A		See Note 3		900	900	0.81	←			See Note 2			→	Black on Orange	2	1.62	-	Portable sign
8	W21-5	SHOULDER WORK	See Note 3		900	900	0.81	←			See Note 2			→	Black on Orange	2	1.62	-	Portable sign
															Total	22	13.3	28	
															Rounded Total	22	15	30	

NOTES:

1. Supports shall be in accordance with Det. EM635-01.
2. See "Manual on Uniform Traffic Control Devices" and "Standard Highway Signs" for dimensions.
3. See Detail M635-10.
4. See Traffic Control Narrative.

U.S. DEPARTMENT OF TRANSPORTATION
FEDERAL HIGHWAY ADMINISTRATION
EASTERN FEDERAL LANDS HIGHWAY DIVISION
STERLING, VIRGINIA

SHILOH NATIONAL MILITARY PARK

CONSTRUCTION SIGN SCHEDULE

OPTION 3

m:\projects\sh\502(1)\proj_dev\cadd\consignudgn
6/9/2008

NPS NO.	REG	STATE	PROJECT	SHEET NO.
304 41,920	SE	TN	TEA-21 SHIL 502(3)	F-1

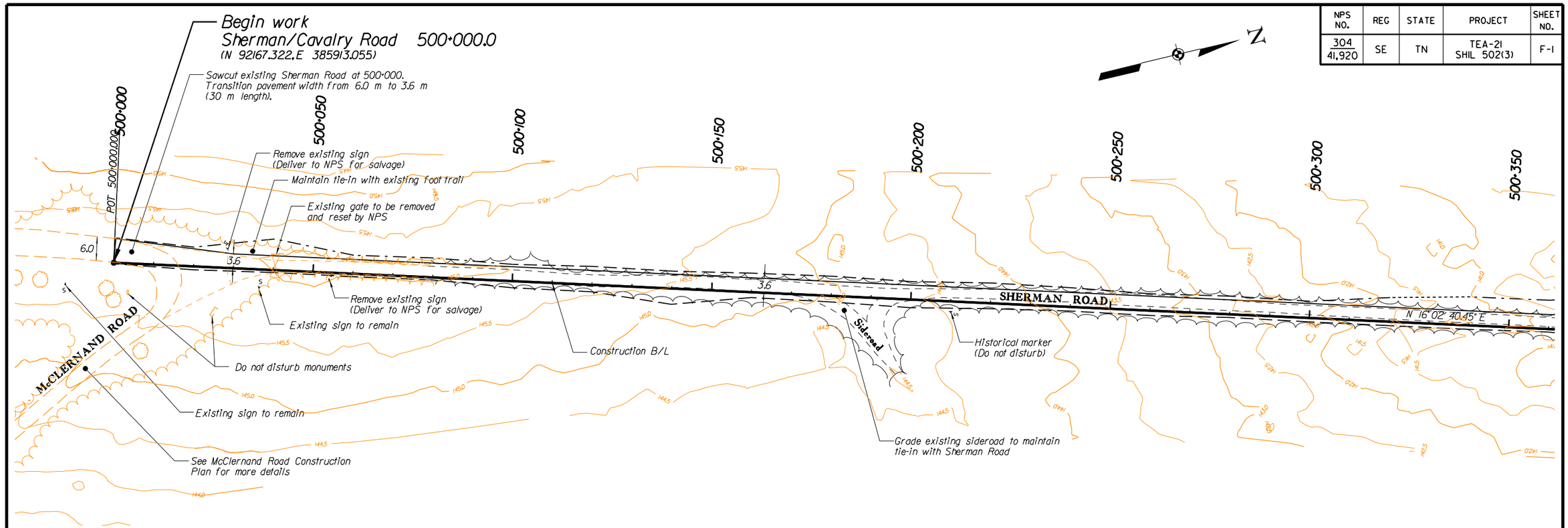

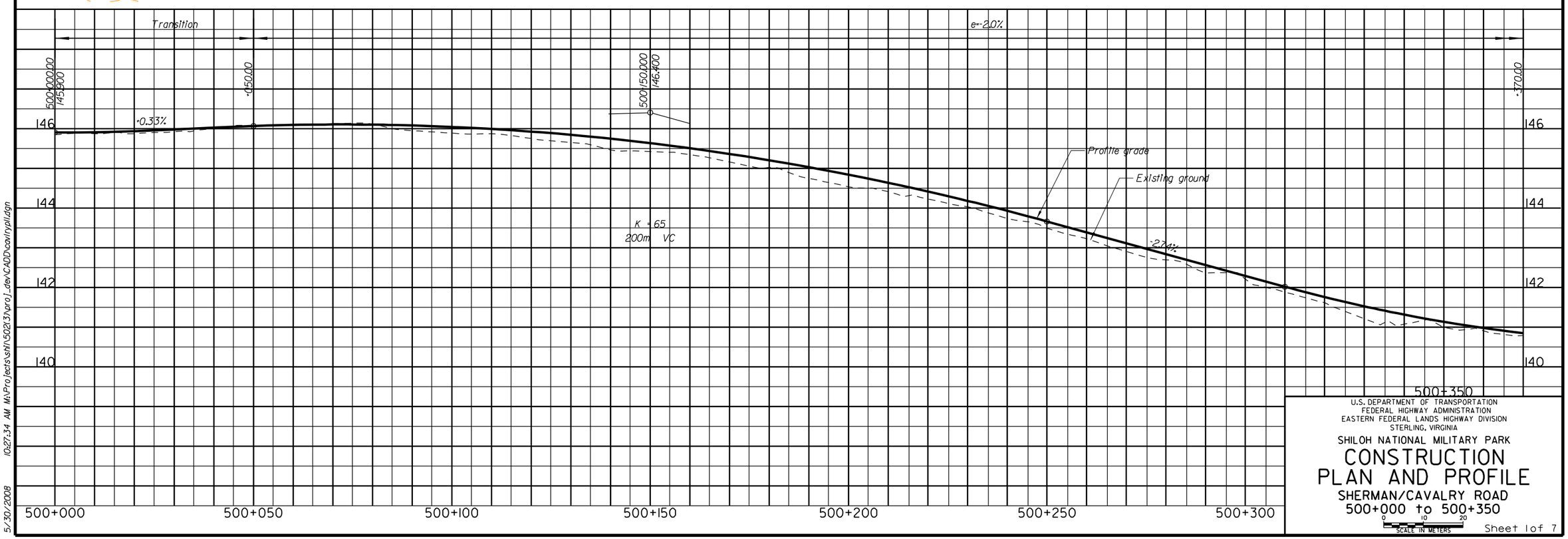

U.S. DEPARTMENT OF TRANSPORTATION
FEDERAL HIGHWAY ADMINISTRATION
EASTERN FEDERAL LANDS HIGHWAY DIVISION
STERLING, VIRGINIA

SHILOH NATIONAL MILITARY PARK

CONSTRUCTION PLAN AND PROFILE

SHERMAN/CAVALRY ROAD
500+000 to 500+350

0 10 20
SCALE IN METERS

Sheet 1 of 7

5/30/2008 10:27:34 AM M:\Projects\sh\502(3)\proj_dev\CADD\cover\ppl.dgn

NPS NO.	REG	STATE	PROJECT	SHEET NO.
304 / 41,920	SE	TN	TEA-21 SHIL 502(3)	F-2

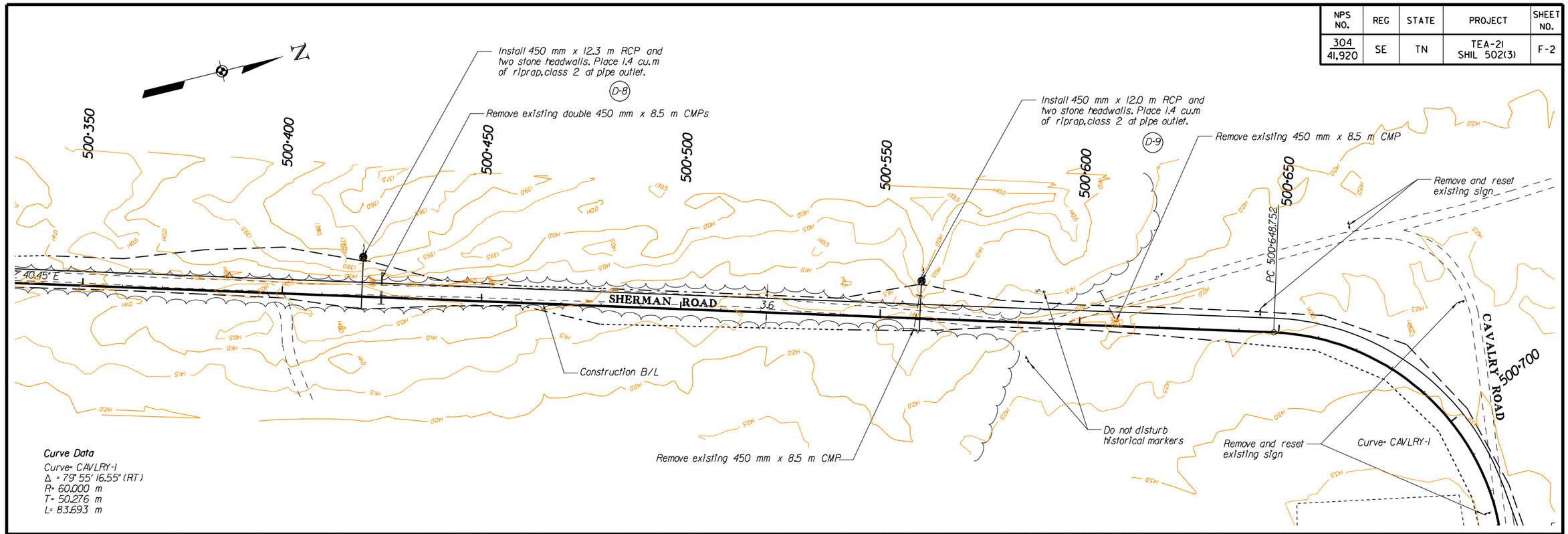

U.S. DEPARTMENT OF TRANSPORTATION
FEDERAL HIGHWAY ADMINISTRATION
EASTERN FEDERAL LANDS HIGHWAY DIVISION
STERLING, VIRGINIA

SHILOH NATIONAL MILITARY PARK

CONSTRUCTION PLAN AND PROFILE

SHERMAN/CAVALRY ROAD
500+350 to 500+700

0 10 20
SCALE IN METERS

Sheet 2 of 7

6/23/2008 9:17:55 AM M:\Projects\sh\502(3)\proj_dev\CADD\cavlryplz.dgn

NPS NO.	REG	STATE	PROJECT	SHEET NO.
304 41,920	SE	TN	TEA-21 SHIL 502(3)	F-3

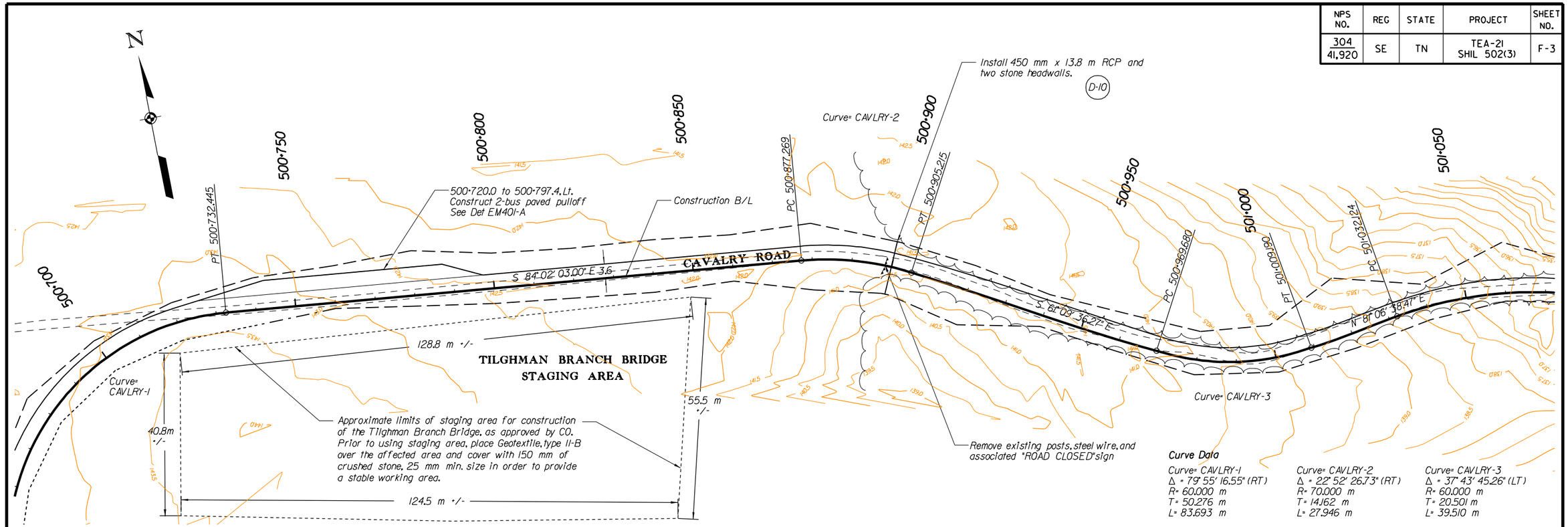

U.S. DEPARTMENT OF TRANSPORTATION
FEDERAL HIGHWAY ADMINISTRATION
EASTERN FEDERAL LANDS HIGHWAY DIVISION
STERLING, VIRGINIA

SHILOH NATIONAL MILITARY PARK

CONSTRUCTION PLAN AND PROFILE

SHERMAN/CAVALRY ROAD
500+700 to 501+050

0 10 20
SCALE IN METERS

Sheet 3 of 7

6/23/2008 11:24:44 AM M:\Projects\shl\502(3)\proj_dev\CADD\cavlryp3.dgn

NPS NO.	REG	STATE	PROJECT	SHEET NO.
304 41,920	SE	TN	TEA-21 SHIL 502(3)	F-4

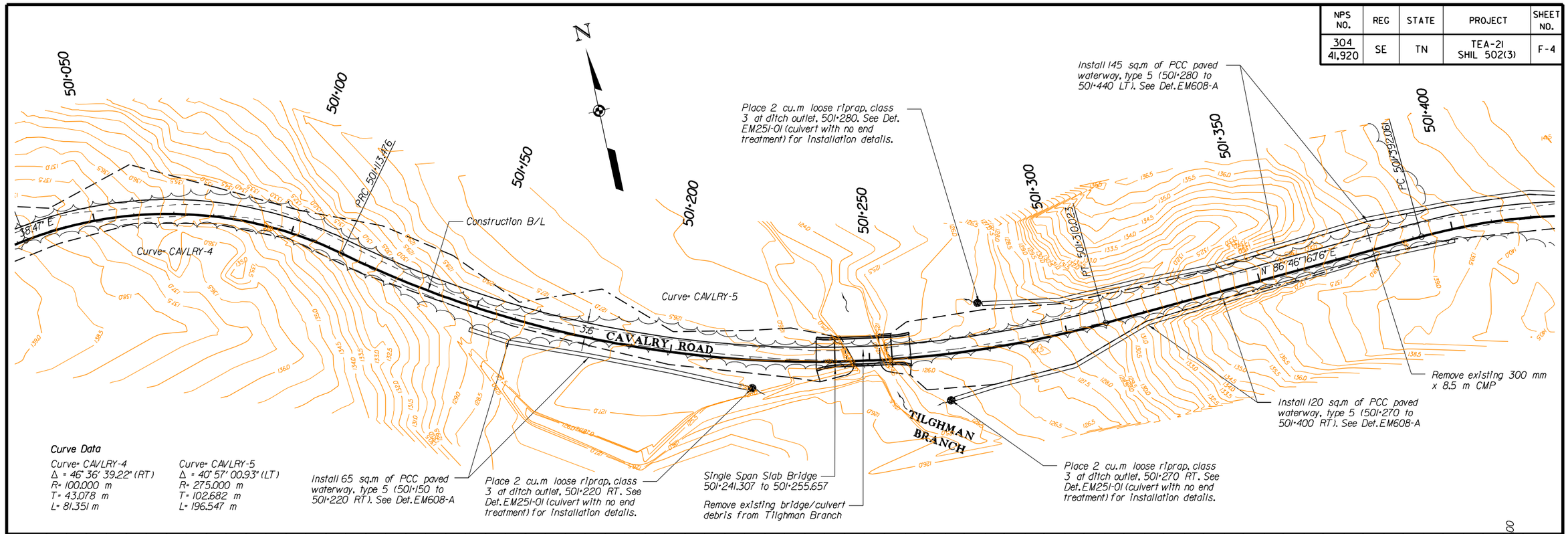

Curve Data

Curve= CAVLRY-4
Δ = 46° 36' 39.22" (RT)
R= 100.000 m
T= 43.078 m
L= 81.351 m

Curve= CAVLRY-5
Δ = 40° 57' 00.93" (LT)
R= 275.000 m
T= 102.682 m
L= 196.547 m

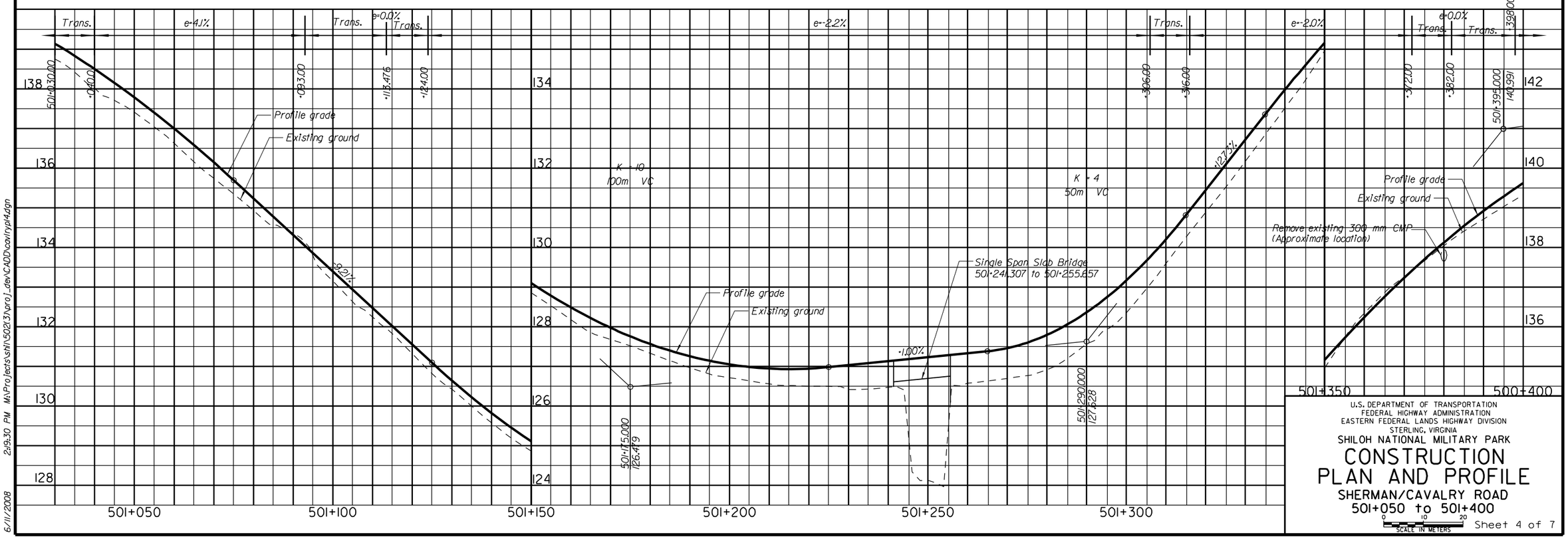

U.S. DEPARTMENT OF TRANSPORTATION
FEDERAL HIGHWAY ADMINISTRATION
EASTERN FEDERAL LANDS HIGHWAY DIVISION
STERLING, VIRGINIA

SHILOH NATIONAL MILITARY PARK

CONSTRUCTION PLAN AND PROFILE

SHERMAN/CAVALRY ROAD
501+050 to 501+400

0 10 20
SCALE IN METERS

6/11/2008 2:19:30 PM M:\Projects\sht\502(3)\proj_dev\CADD\cavlryp14.dgn

NPS NO.	REG	STATE	PROJECT	SHEET NO.
304 41,920	SE	TN	TEA-21 SHIL 502(3)	F-5

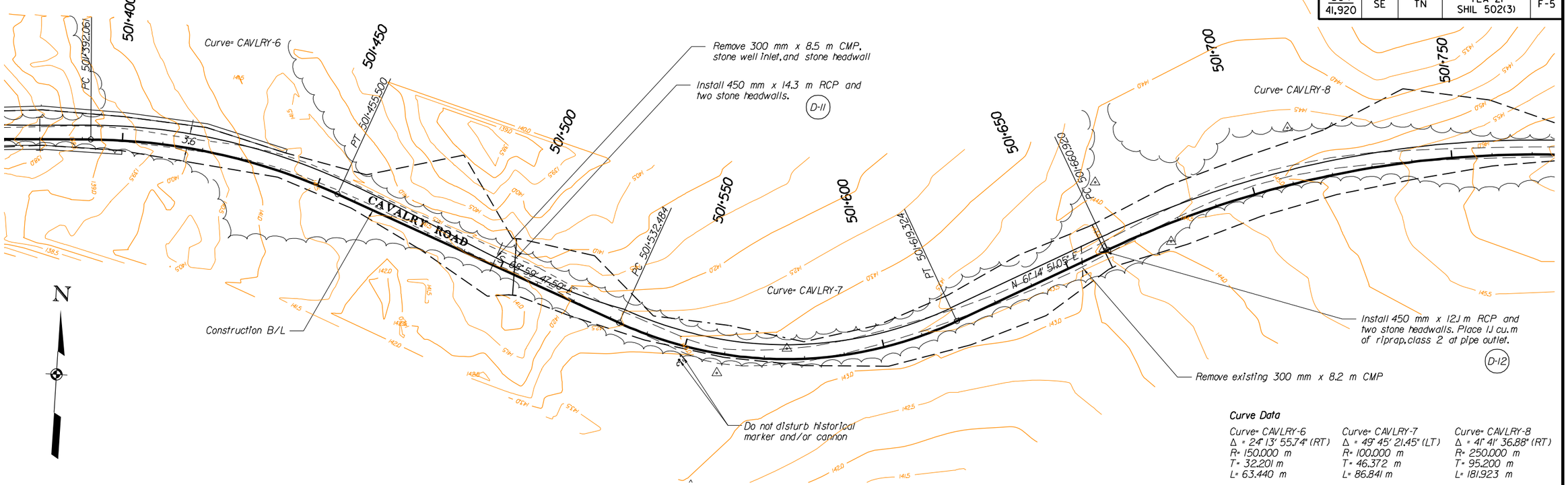

Curve Data

Curve= CAVLRY-6	Curve= CAVLRY-7	Curve= CAVLRY-8
Δ = 24° 13' 55.74" (RT)	Δ = 49° 45' 21.45" (LT)	Δ = 41° 41' 36.88" (RT)
R= 150.000 m	R= 100.000 m	R= 250.000 m
T= 32.201 m	T= 46.372 m	T= 95.200 m
L= 63.440 m	L= 86.841 m	L= 181.923 m

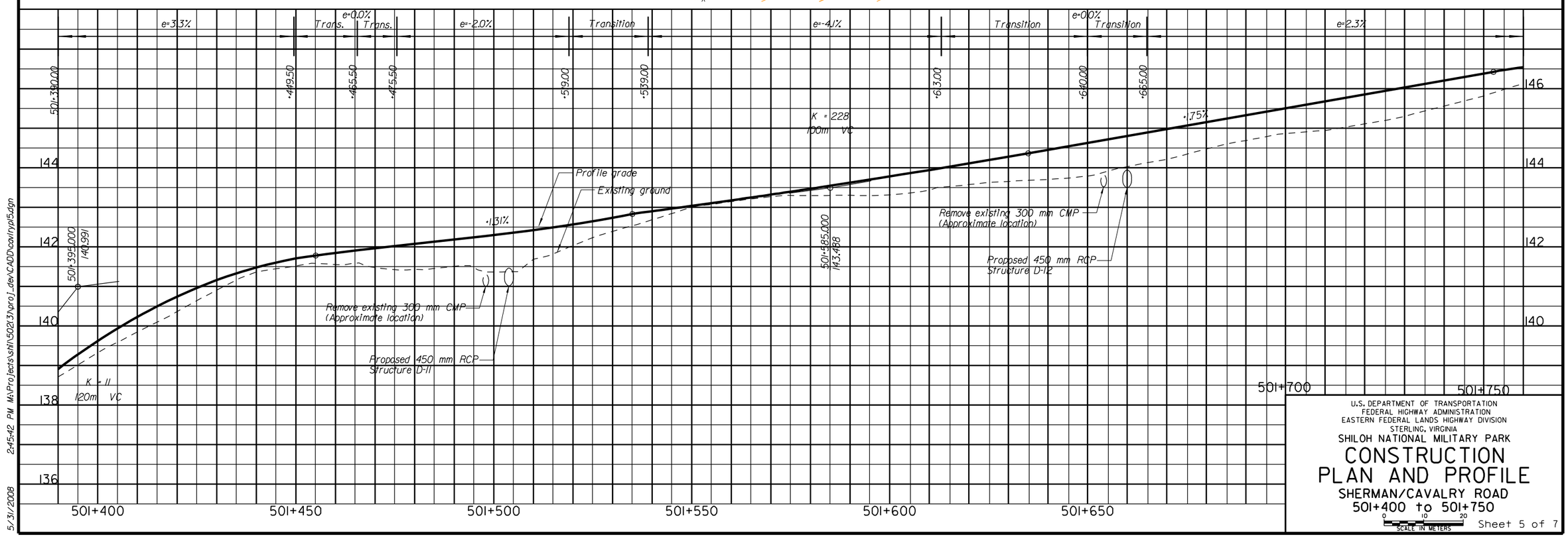

U.S. DEPARTMENT OF TRANSPORTATION
FEDERAL HIGHWAY ADMINISTRATION
EASTERN FEDERAL LANDS HIGHWAY DIVISION
STERLING, VIRGINIA

SHILOH NATIONAL MILITARY PARK

CONSTRUCTION PLAN AND PROFILE

SHERMAN/CAVALRY ROAD
501+400 to 501+750

0 10 20
SCALE IN METERS

Sheet 5 of 7

5/31/2008 2:45:42 PM M:\Projects\sh\502(3)\proj_dev\CADD\cavlryp15.dgn

NPS NO.	REG	STATE	PROJECT	SHEET NO.
304 41,920	SE	TN	TEA-21 SHIL 502(3)	F-6

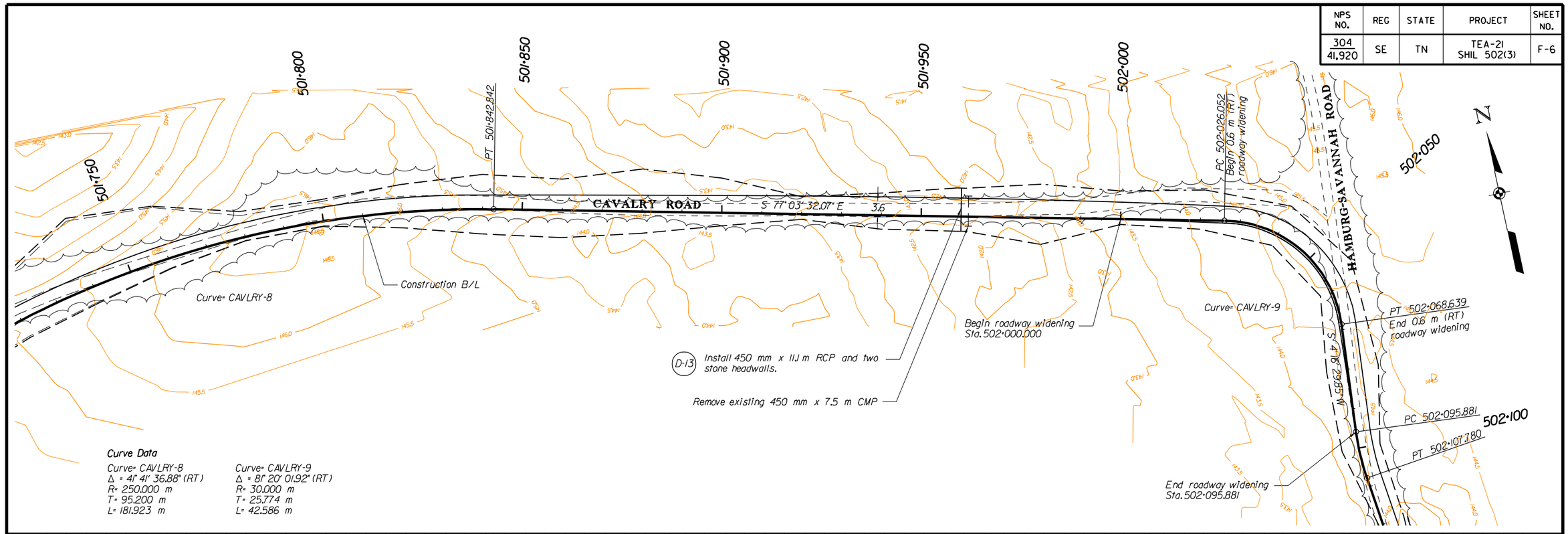

U.S. DEPARTMENT OF TRANSPORTATION
FEDERAL HIGHWAY ADMINISTRATION
EASTERN FEDERAL LANDS HIGHWAY DIVISION
STERLING, VIRGINIA

SHILOH NATIONAL MILITARY PARK

CONSTRUCTION PLAN AND PROFILE

SHERMAN/CAVALRY ROAD
501+750 to 502+100

0 10 20
SCALE IN METERS

NPS NO.	REG	STATE	PROJECT	SHEET NO.
304 41,920	SE	TN	TEA-21 SHIL 502(3)	F-7

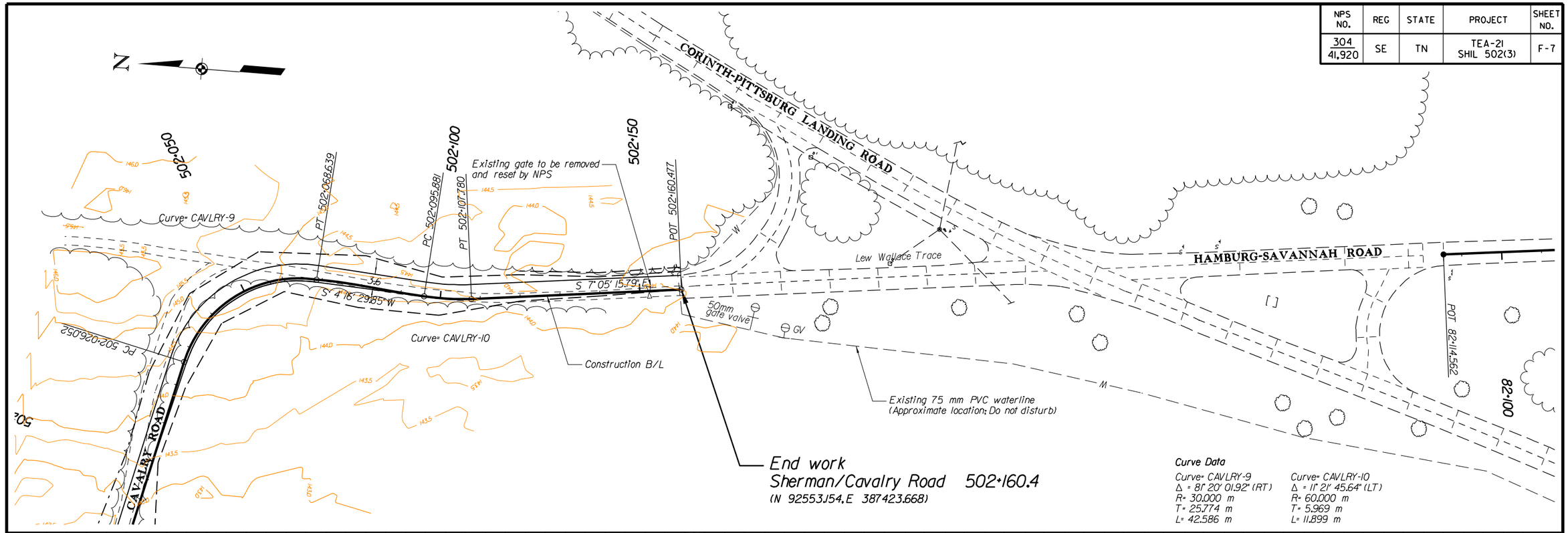

Curve Data

Curve= CAVLRY-9	Curve= CAVLRY-10
Δ = 81° 20' 01.92" (RT)	Δ = 11° 21' 45.64" (LT)
R= 30.000 m	R= 60.000 m
T= 25.774 m	T= 5.969 m
L= 42.586 m	L= 11.899 m

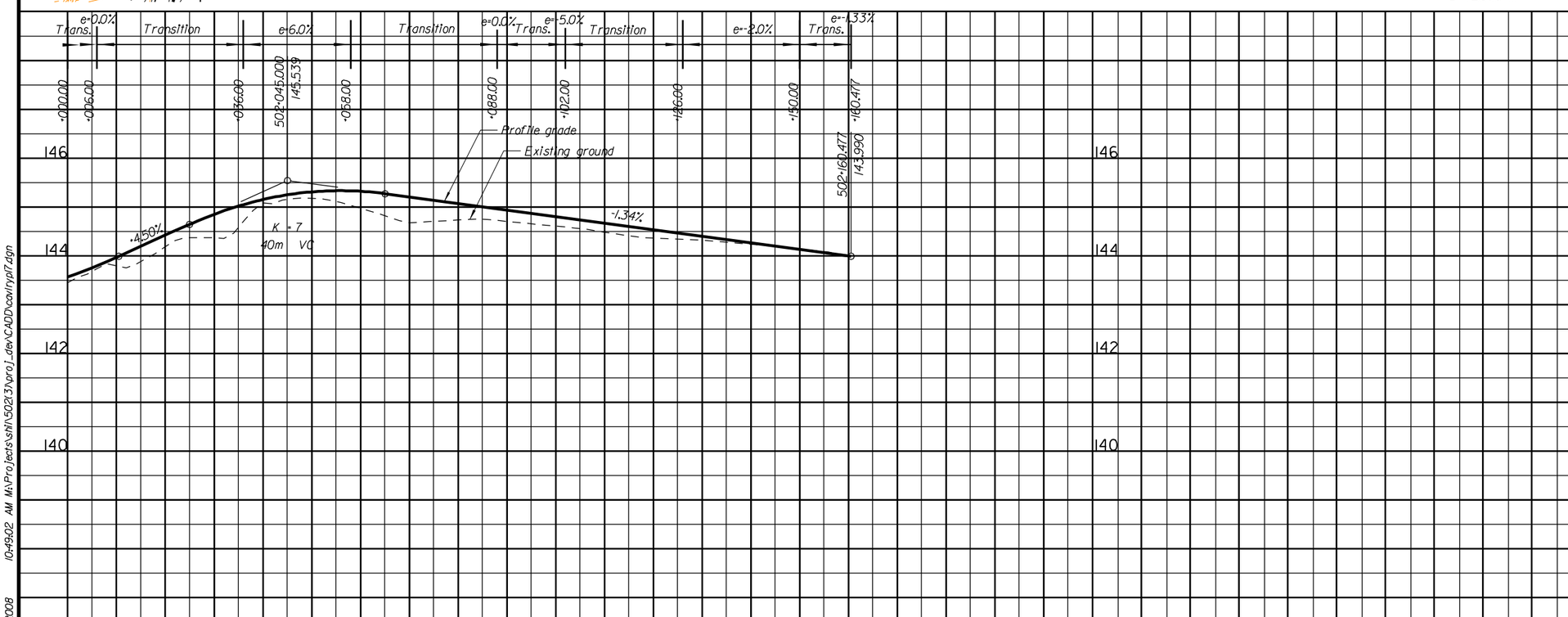

U.S. DEPARTMENT OF TRANSPORTATION
FEDERAL HIGHWAY ADMINISTRATION
EASTERN FEDERAL LANDS HIGHWAY DIVISION
STERLING, VIRGINIA

SHILOH NATIONAL MILITARY PARK

CONSTRUCTION PLAN AND PROFILE

SHERMAN/CAVALRY ROAD
502+100 to 502+160.4

0 10 20
SCALE IN METERS

Sheet 7 of 7

5/30/2008 10:49:02 AM M:\Projects\sh\502(3)\proj_dev\CADD\cavlry17.dgn

NPS NO.	REG	STATE	PROJECT	SHEET NO.
304 41,920	SE	TN	TEA-21 SHIL 502(3)	F-8

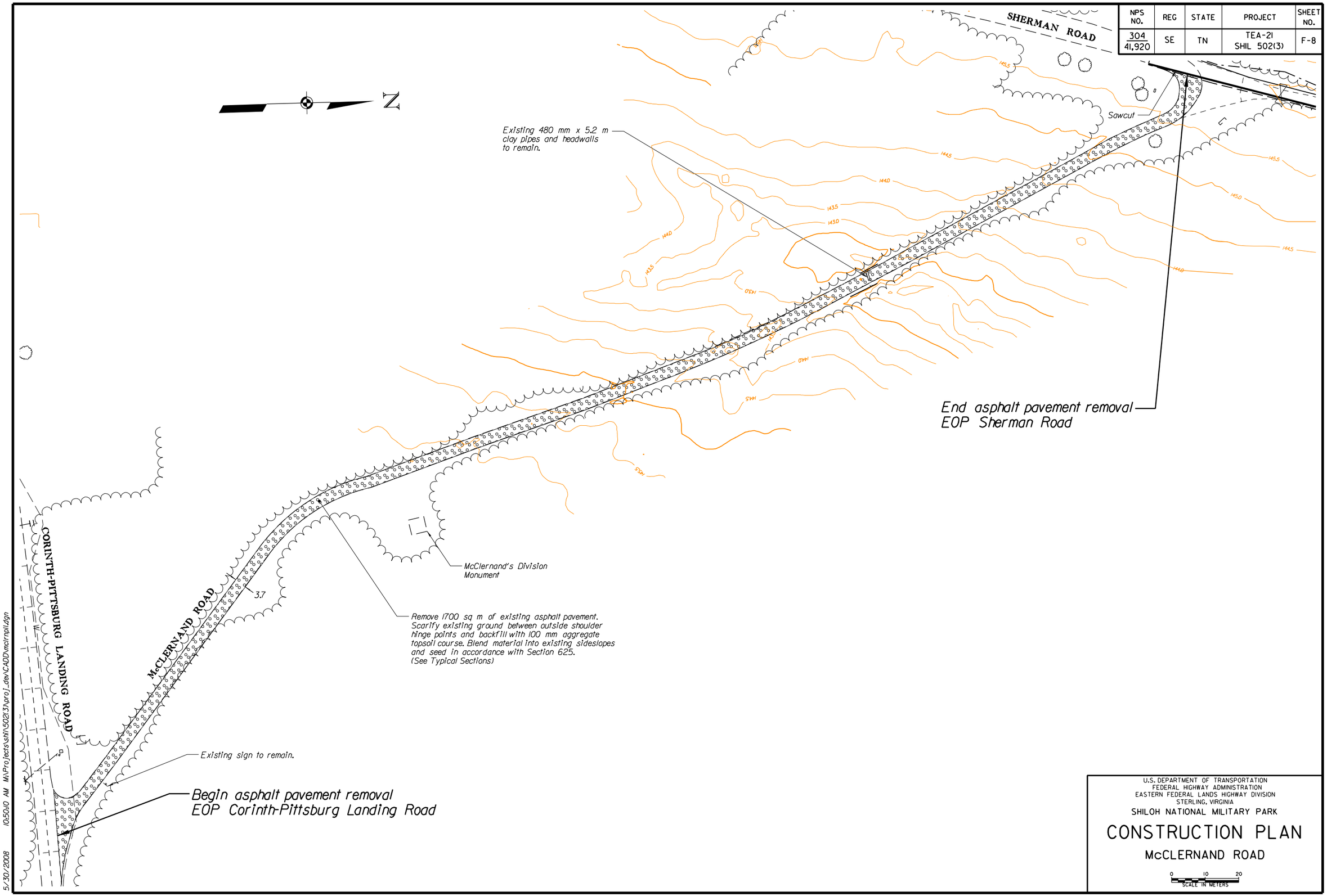

U.S. DEPARTMENT OF TRANSPORTATION
FEDERAL HIGHWAY ADMINISTRATION
EASTERN FEDERAL LANDS HIGHWAY DIVISION
STERLING, VIRGINIA

SHILOH NATIONAL MILITARY PARK

CONSTRUCTION PLAN

McCLERNAND ROAD

0 10 20
SCALE IN METERS

5/30/2008 10:50:10 AM M:\Projects\shil\50213\proj_dev\CADD\mclrnpll.dgn

NPS NO.	REG	STATE	PROJECT	SHEET NO.
304 41,920	SE	TN	TEA- 21 SHIL 502(3)	F-9

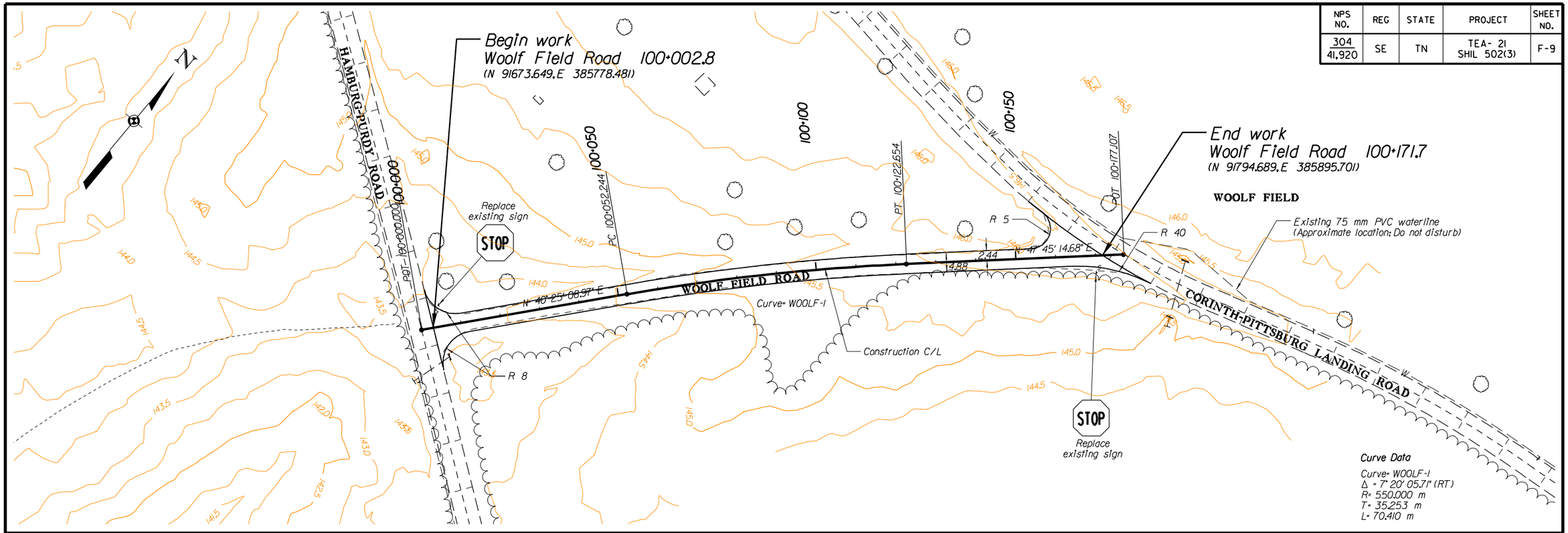

U.S. DEPARTMENT OF TRANSPORTATION
FEDERAL HIGHWAY ADMINISTRATION
EASTERN FEDERAL LANDS HIGHWAY DIVISION
STERLING, VIRGINIA

SHILOH NATIONAL MILITARY PARK

CONSTRUCTION PLAN AND PROFILE

WOOLF FIELD ROAD
100+000 to 100+177.107

0 10 20
SCALE IN METERS

5/30/2008 10:51:47 AM M:\Projects\sh\502(3)\proj_dev\CADD\woolf.pdgn

NPS NO.	REG	STATE	PROJECT	SHEET NO.
304 41,920	SE	TN	TEA-21 SHIL 502(3)	F-10

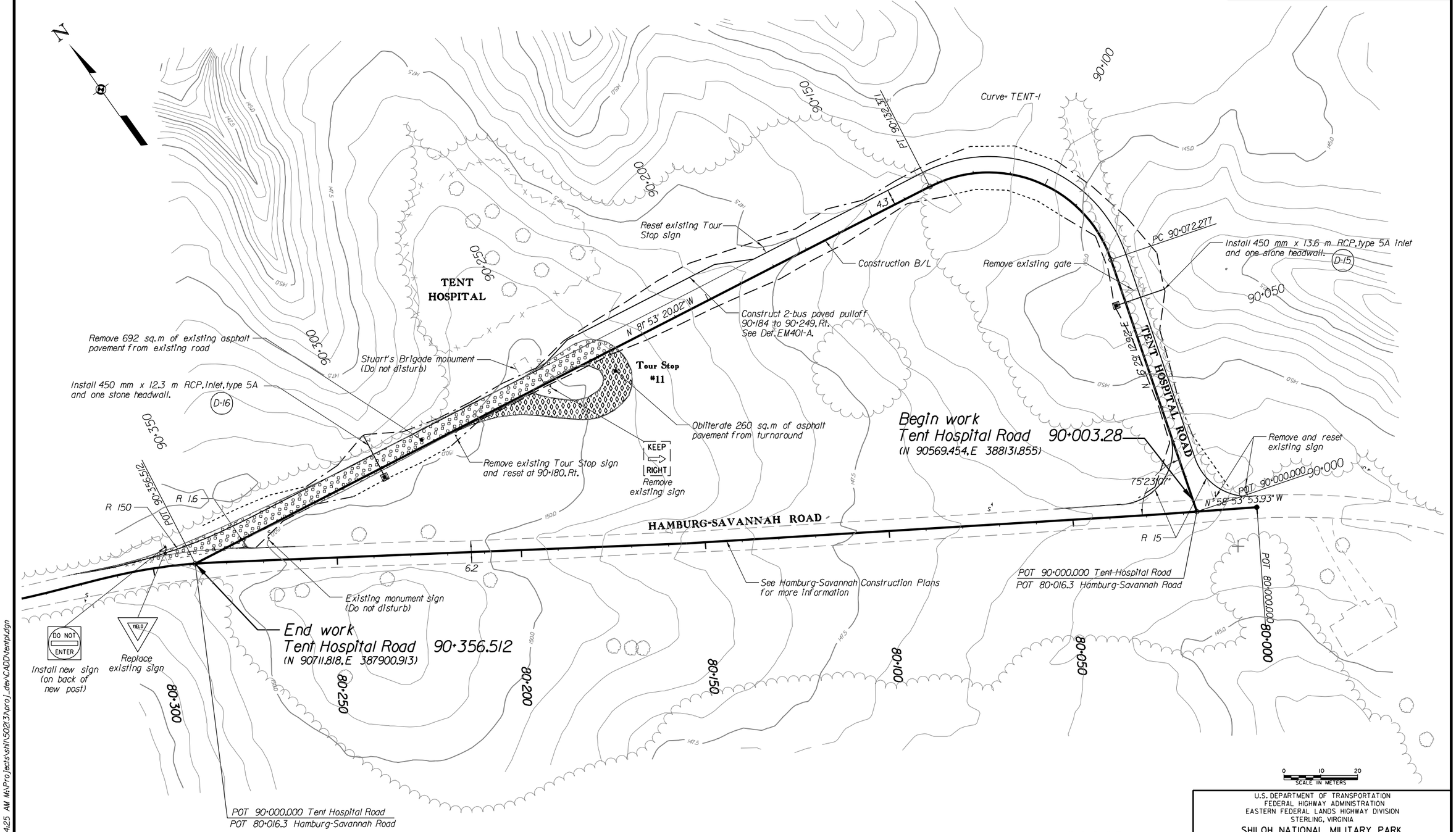

Notes:

1. Install inlet grate slots perpendicular to traffic flow.
2. Prime and paint steel inlet grates with two coats of flat black.

CURVE DATA

Curve- TENT-I
Δ = 98° 22' 32.94" (LT)
R= 35.000 m
T= 40.531 m
L= 60.094 m

U.S. DEPARTMENT OF TRANSPORTATION
FEDERAL HIGHWAY ADMINISTRATION
EASTERN FEDERAL LANDS HIGHWAY DIVISION
STERLING, VIRGINIA

SHILOH NATIONAL MILITARY PARK

CONSTRUCTION PLAN

TENT HOSPITAL ROAD
90+000 to 90+356.512

OPTION 1

5/30/2008 10:54:25 AM M:\Projects\shil\50213\proj_dev\CADD\tentpl.dgn

NPS NO.	REG	STATE	PROJECT	SHEET NO.
304 / 41,920	SE	TN	TEA-21 SHIL 502(3)	F-11

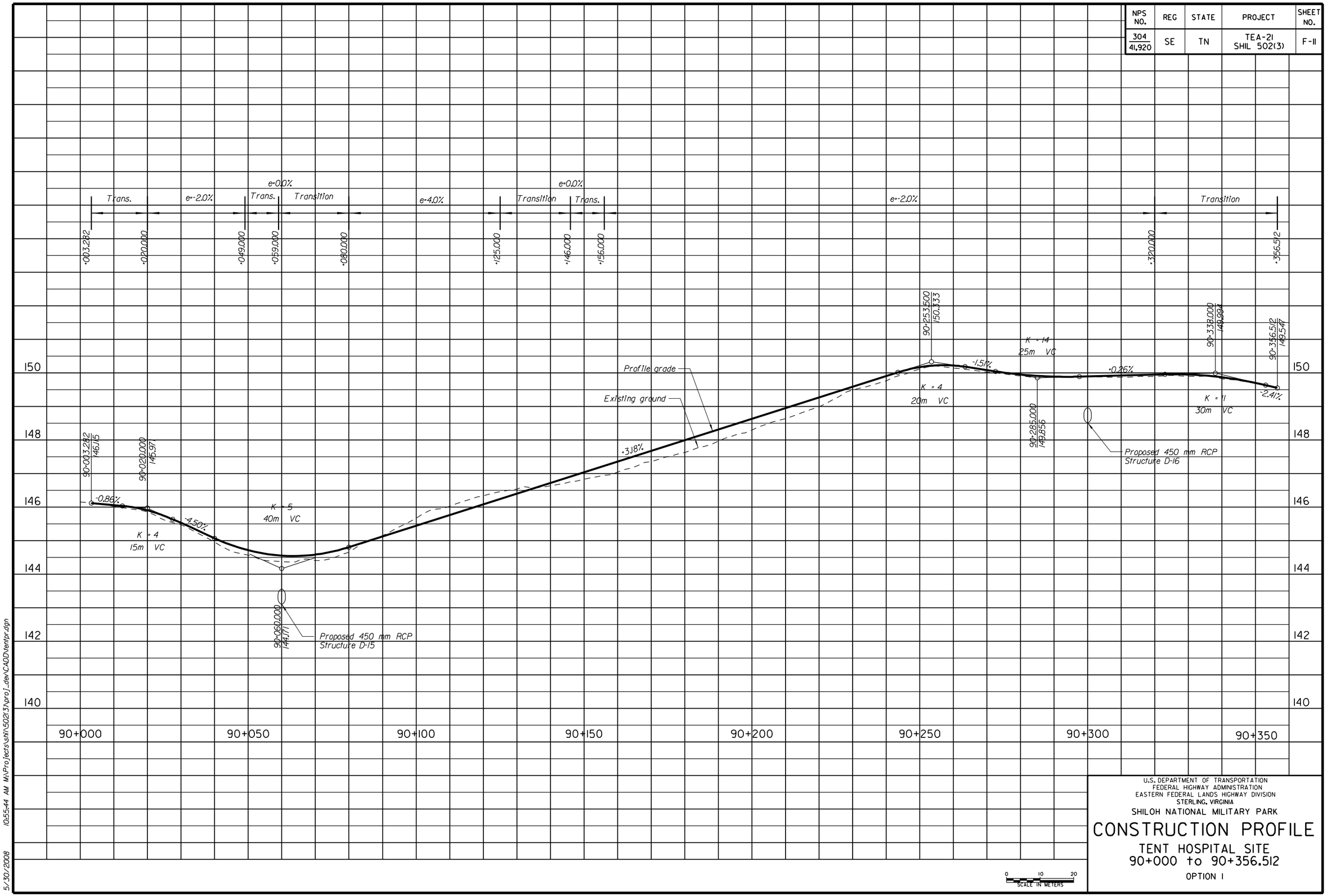

U.S. DEPARTMENT OF TRANSPORTATION
FEDERAL HIGHWAY ADMINISTRATION
EASTERN FEDERAL LANDS HIGHWAY DIVISION
STERLING, VIRGINIA

SHILOH NATIONAL MILITARY PARK

CONSTRUCTION PROFILE

TENT HOSPITAL SITE
90+000 to 90+356.512

OPTION 1

5/30/2008 10:55:44 AM M:\Projects\shil\502(3)\proj_dev\CADD\tentpr.dgn

NPS NO.	REG	STATE	PROJECT	SHEET NO.
304 41,920	SE	TN	TEA-21 SHIL 502(3)	F-12

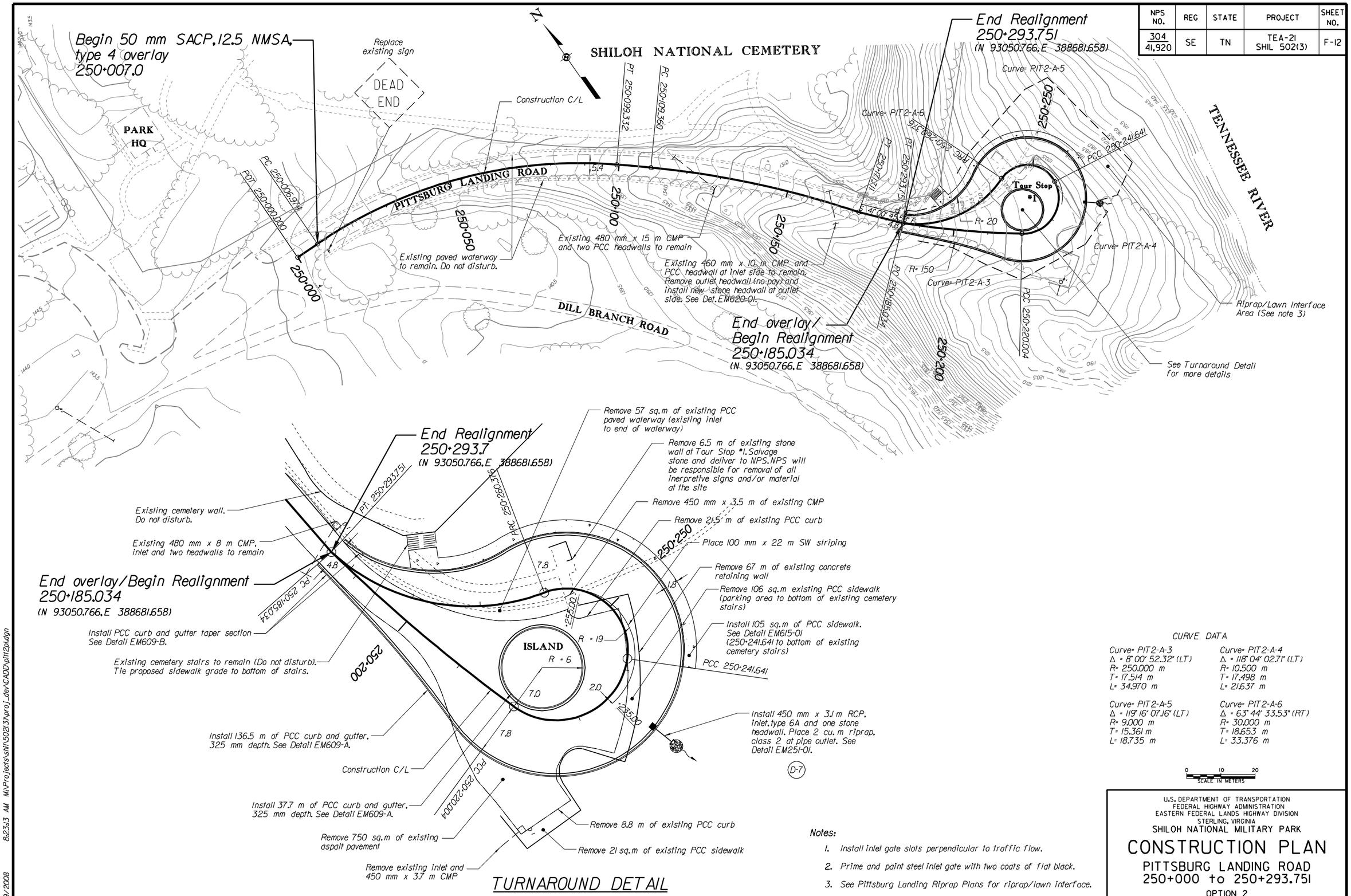

TURNAROUND DETAIL

CURVE DATA

Curve= PIT2-A-3 Δ = 8° 00' 52.32" (LT) R= 250.000 m T= 17.514 m L= 34.970 m	Curve= PIT2-A-4 Δ = 118° 04' 02.71" (LT) R= 10.500 m T= 17.498 m L= 21.637 m
Curve= PIT2-A-5 Δ = 119° 16' 07.16" (LT) R= 9.000 m T= 15.361 m L= 18.735 m	Curve= PIT2-A-6 Δ = 63° 44' 33.53" (RT) R= 30.000 m T= 18.653 m L= 33.376 m

0 10 20
SCALE IN METERS

Notes:

1. Install inlet gate slots perpendicular to traffic flow.
2. Prime and paint steel inlet gate with two coats of flat black.
3. See Pittsburg Landing Riprap Plans for riprap/lawn interface.

U.S. DEPARTMENT OF TRANSPORTATION
FEDERAL HIGHWAY ADMINISTRATION
EASTERN FEDERAL LANDS HIGHWAY DIVISION
STERLING, VIRGINIA

SHILOH NATIONAL MILITARY PARK

CONSTRUCTION PLAN

PITTSBURG LANDING ROAD
250+000 to 250+293.751

OPTION 2

6/9/2008 8:23:43 AM M:\Projects\shil\50213\proj_dev\CADD\pit2pldgn

NPS NO.	REG	STATE	PROJECT	SHEET NO.
304 / 41,920	SE	TN	TEA-21 SHIL 502(3)	F-13

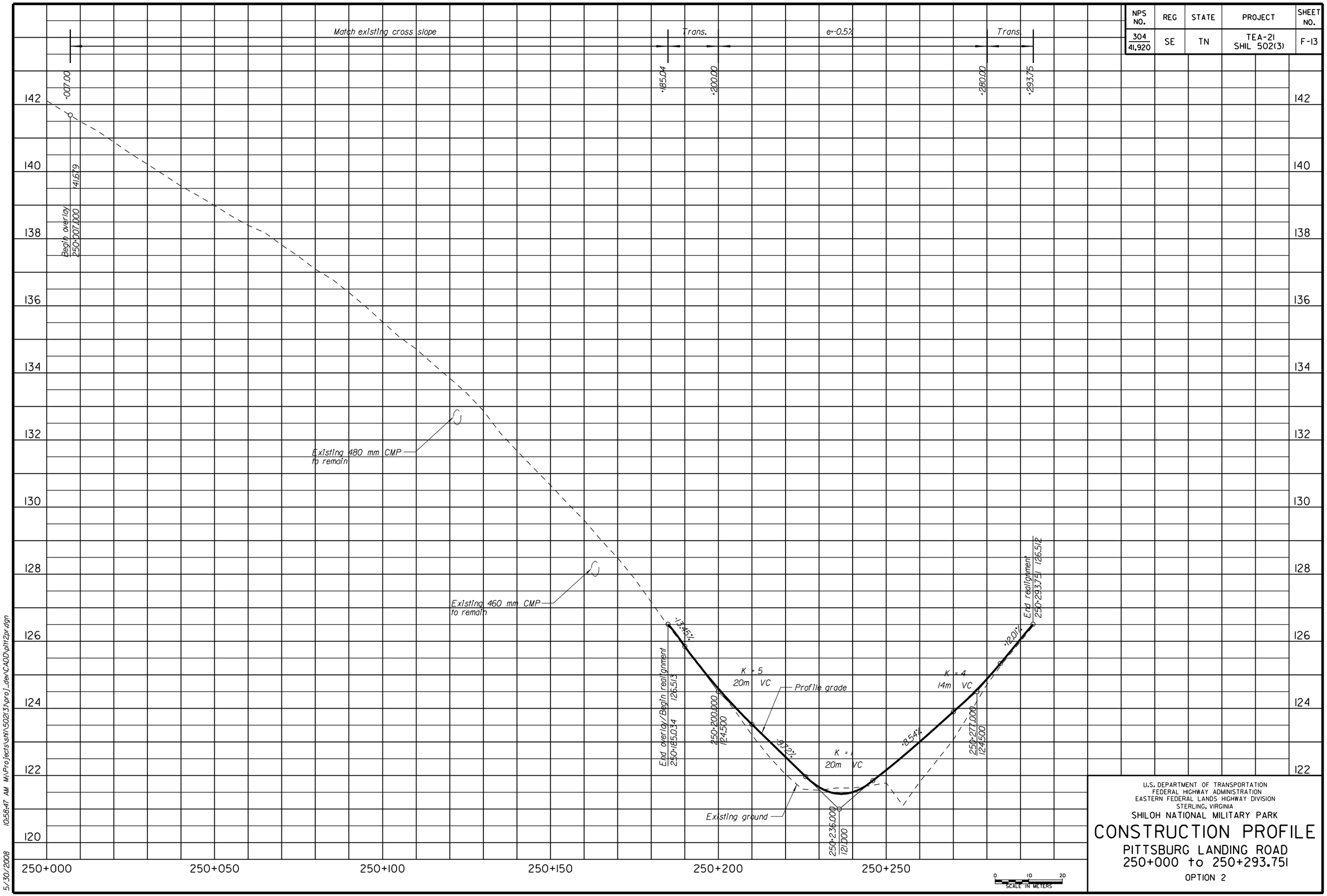

U.S. DEPARTMENT OF TRANSPORTATION
FEDERAL HIGHWAY ADMINISTRATION
EASTERN FEDERAL LANDS HIGHWAY DIVISION
STERLING, VIRGINIA

SHILOH NATIONAL MILITARY PARK

CONSTRUCTION PROFILE

PITTSBURG LANDING ROAD
250+000 to 250+293.751

OPTION 2

5/30/2008 10:58:47 AM M:\Projects\shl\502(3)\proj_dev\CADD\split2pr.dgn

NPS NO.	REG	STATE	PROJECT	SHEET NO.
304 41,920	SE	TN	TEA-21 SHIL 502(3)	F-14

NOTES:

1. The proposed final pavement grade will be 100 mm higher than the existing pavement grade for the full-width reconstruction area on Hamburg-Savannah Road from 80+000 to 80+400, and Hamburg-Purdy Road. See Section 152 for construction survey and staking requirements for the reconstruction area.
2. Provide 25 m pavement transition between the full-width reconstruction area and the existing pavement.
3. Staking for horizontal alignment in realignment areas must be approved by the CO prior to the start of grading operations. See Section 152.02 for construction survey and staking requirements for any resurvey work that may be required to stake revised horizontal alignments.

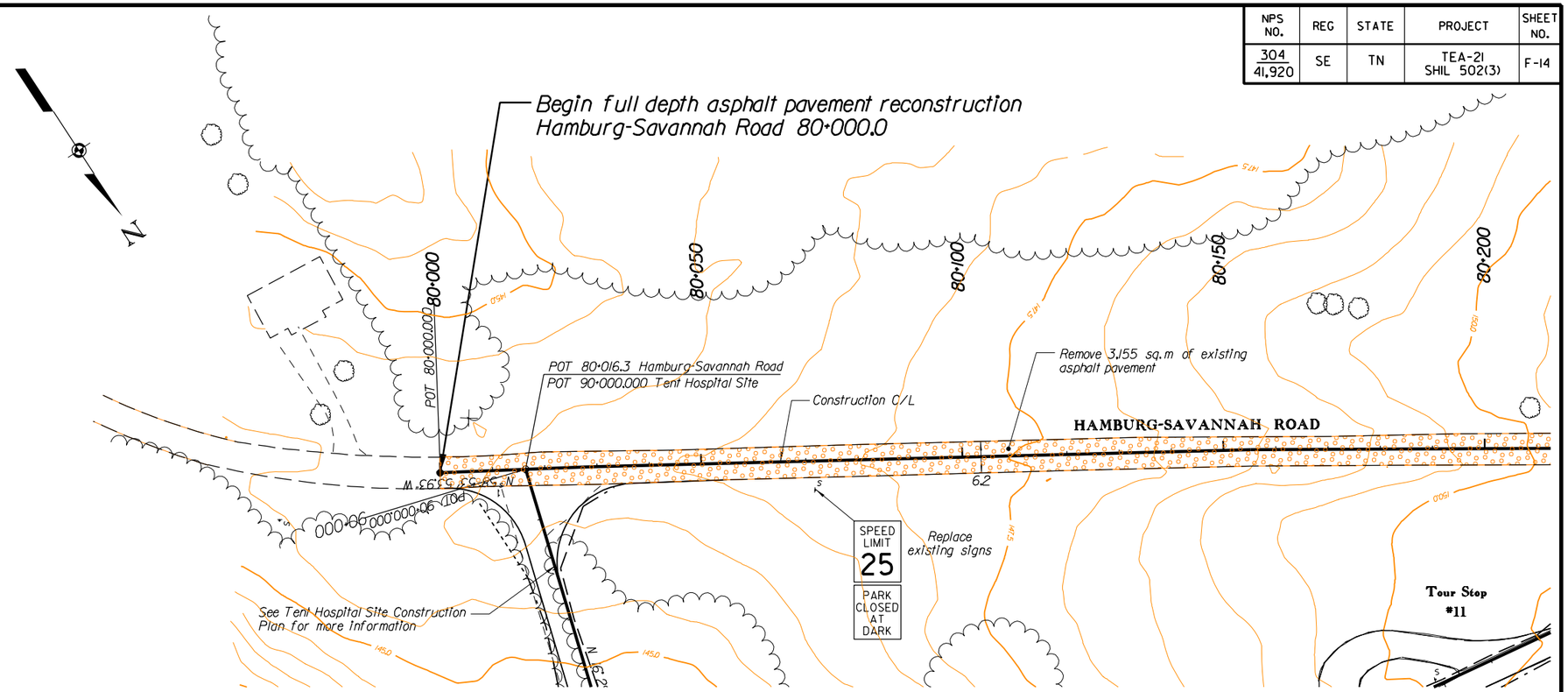

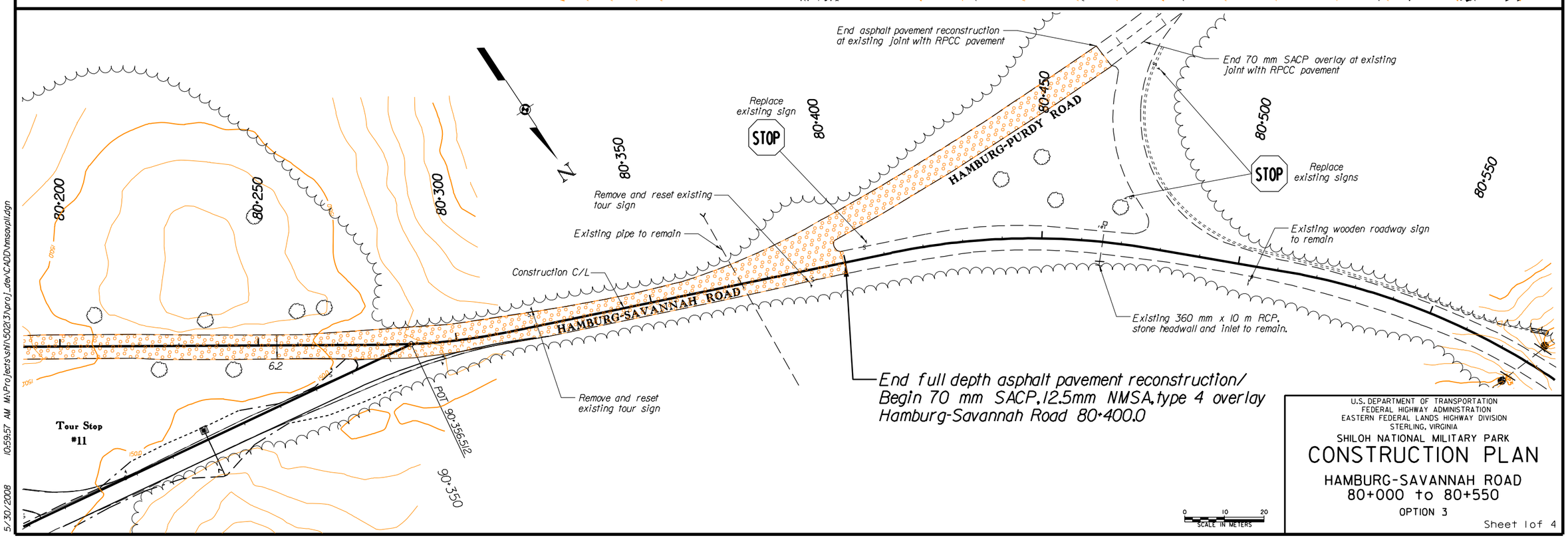

U.S. DEPARTMENT OF TRANSPORTATION
FEDERAL HIGHWAY ADMINISTRATION
EASTERN FEDERAL LANDS HIGHWAY DIVISION
STERLING, VIRGINIA

SHILOH NATIONAL MILITARY PARK

CONSTRUCTION PLAN

HAMBURG-SAVANNAH ROAD
80+000 to 80+550

OPTION 3

Sheet 1 of 4

5/30/2008 10:59:57 AM M:\Projects\shil\502(3)\proj_dev\CADD\hmsavpll.dgn

NPS NO.	REG	STATE	PROJECT	SHEET NO.
304 / 41,920	SE	TN	TEA-21 SHIL 502(3)	F-15

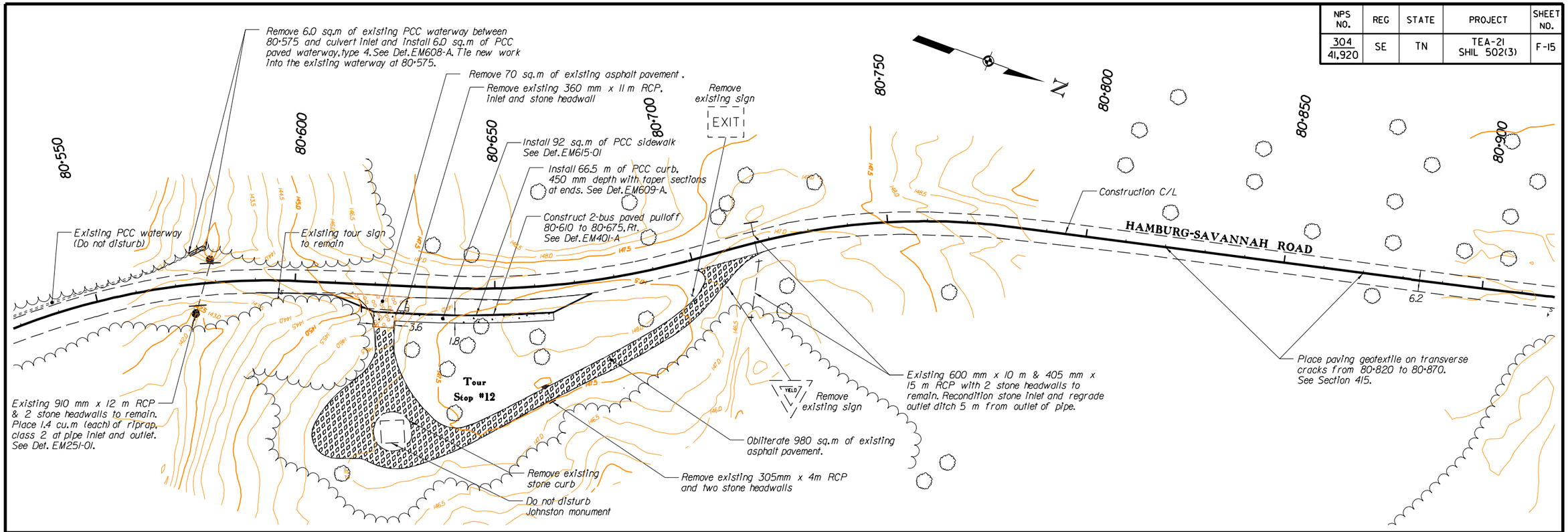

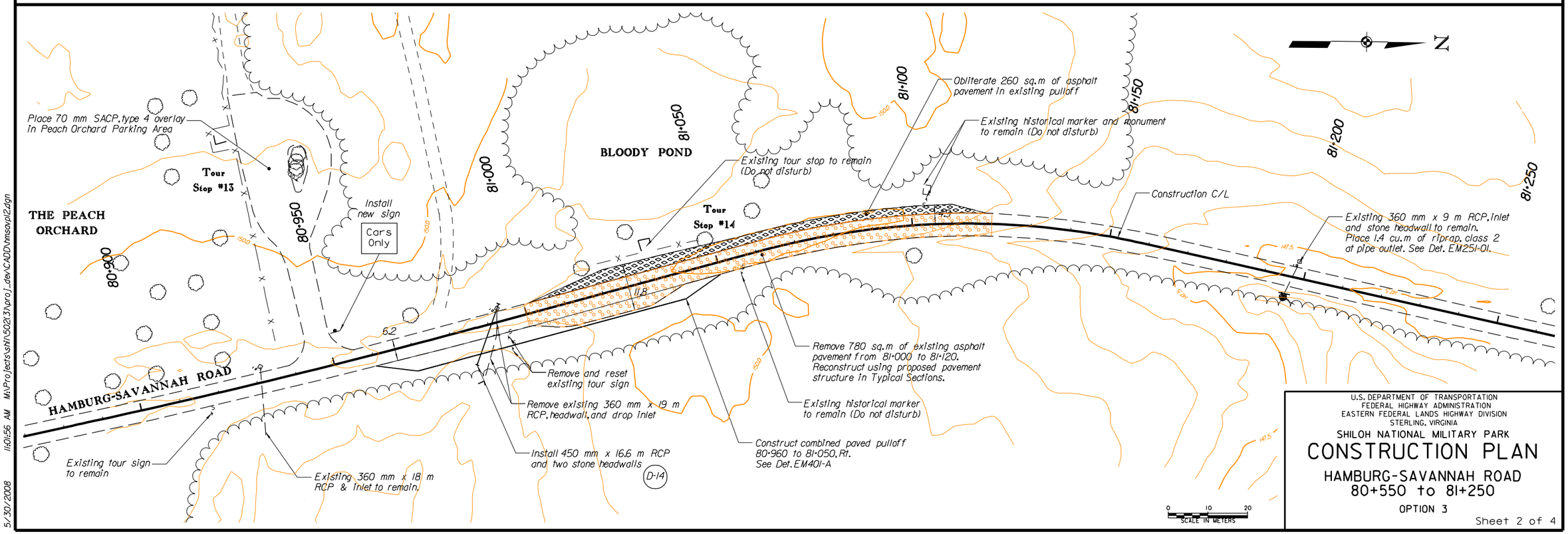

U.S. DEPARTMENT OF TRANSPORTATION
FEDERAL HIGHWAY ADMINISTRATION
EASTERN FEDERAL LANDS HIGHWAY DIVISION
STERLING, VIRGINIA

SHILOH NATIONAL MILITARY PARK

CONSTRUCTION PLAN

HAMBURG-SAVANNAH ROAD
80+550 to 81+250

OPTION 3

Sheet 2 of 4

5/30/2008 11:01:56 AM M:\Projects\shil\502(3)\proj_dev\CADD\rmsavpl2.dgn

NPS NO.	REG	STATE	PROJECT	SHEET NO.
304 / 41,920	SE	TN	TEA-21 SHIL 502(3)	F-16

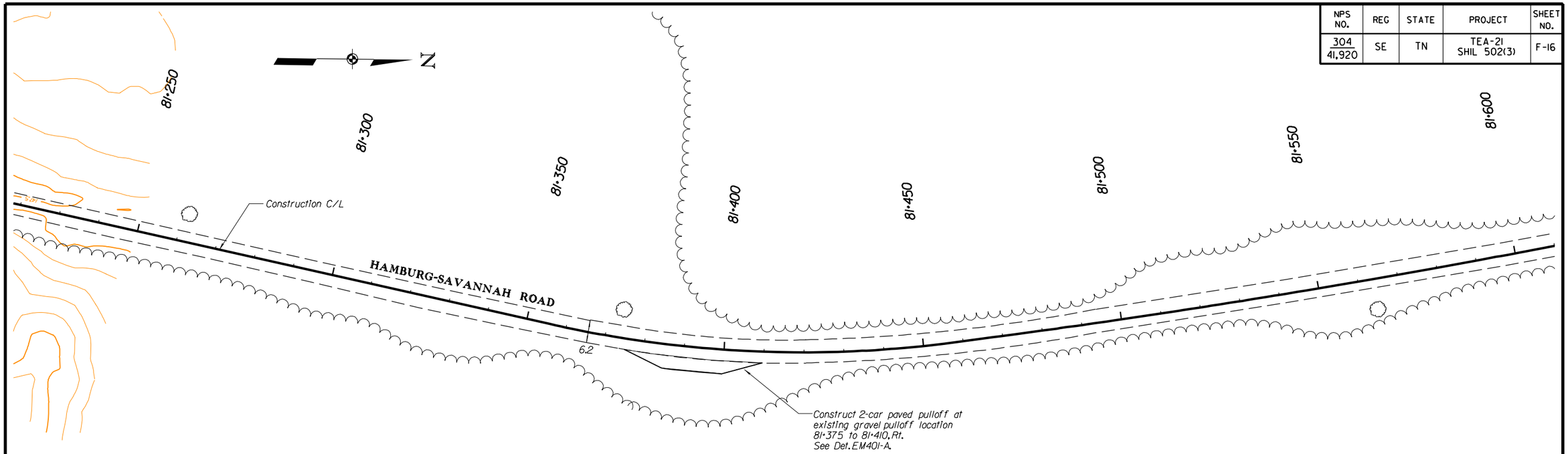

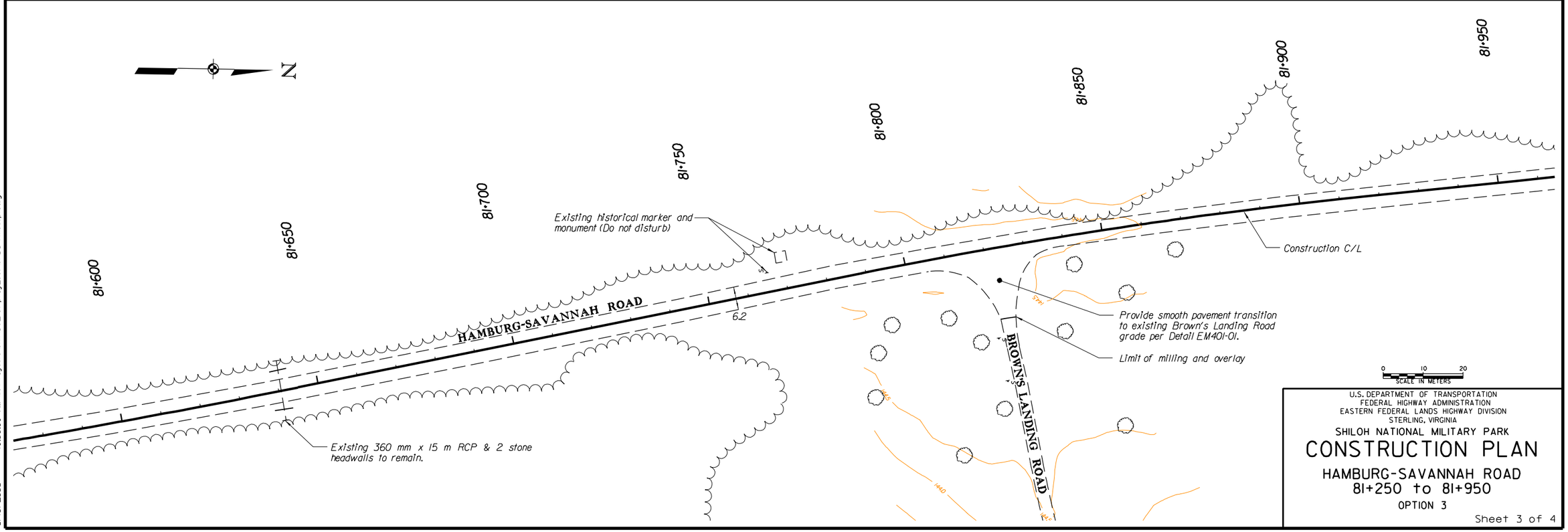

U.S. DEPARTMENT OF TRANSPORTATION
FEDERAL HIGHWAY ADMINISTRATION
EASTERN FEDERAL LANDS HIGHWAY DIVISION
STERLING, VIRGINIA

SHILOH NATIONAL MILITARY PARK

CONSTRUCTION PLAN

HAMBURG-SAVANNAH ROAD
81+250 to 81+950

OPTION 3

Sheet 3 of 4

6/10/2008 10:58:00 AM M:\Projects\shil\502(3)\proj_dev\CADD\hmsavpl3.dgn

NPS NO.	REG	STATE	PROJECT	SHEET NO.
304 / 41,920	SE	TN	TEA-21 SHIL 502(3)	F-17

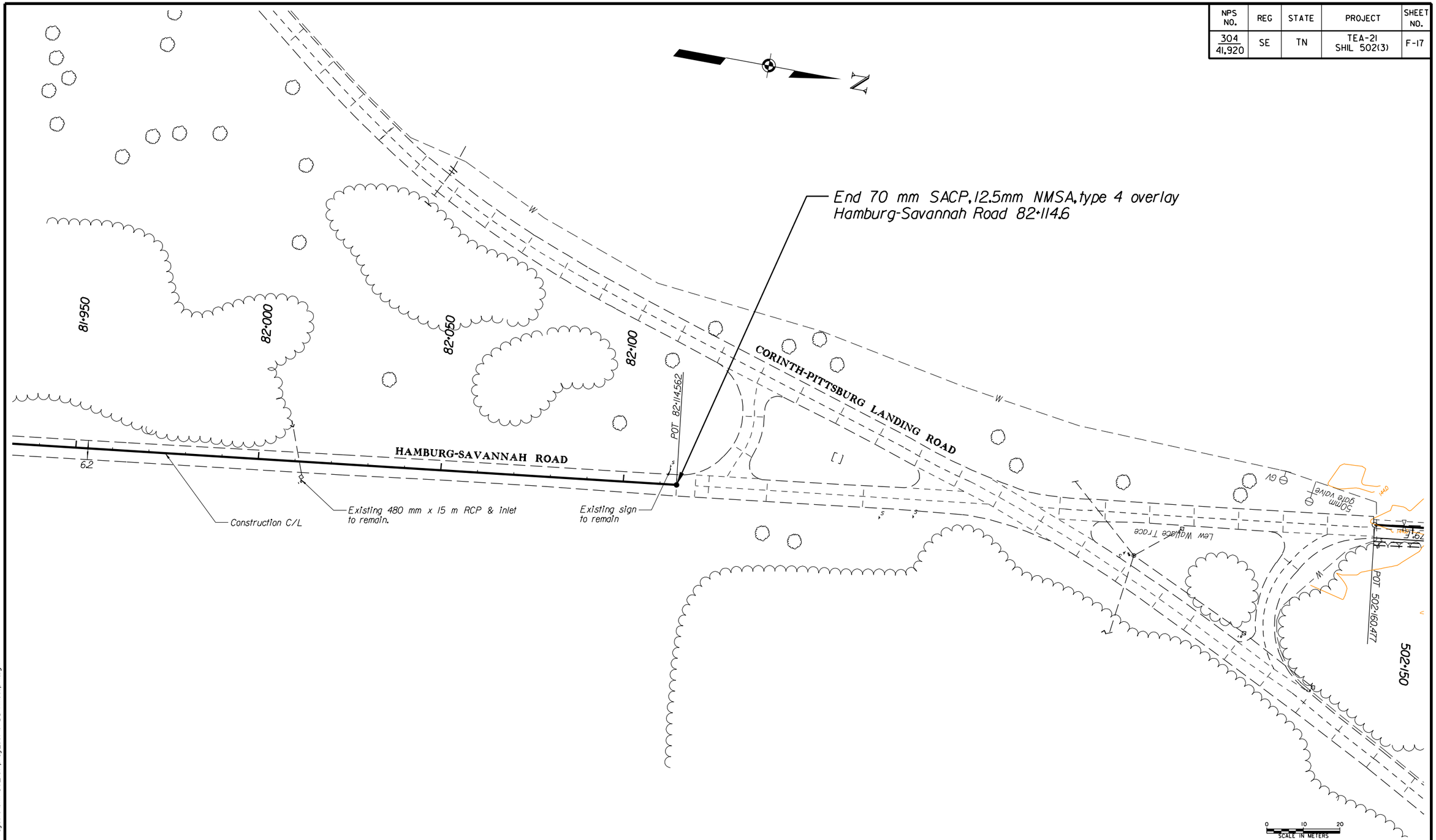

U.S. DEPARTMENT OF TRANSPORTATION
FEDERAL HIGHWAY ADMINISTRATION
EASTERN FEDERAL LANDS HIGHWAY DIVISION
STERLING, VIRGINIA

SHILOH NATIONAL MILITARY PARK

CONSTRUCTION PLAN

HAMBURG-SAVANNAH ROAD
81+950 to 82+114.6

OPTION 3

Sheet 4 of 4

5/30/2008 11:27:34 AM M:\Projects\shil\502(3)\proj_dev\CADD\hmsavpl4.dgn

NPS NO.	REG	STATE	PROJECT	SHEET NO.
304 / 41,920	SE	TN	TEA-21 SHIL 502(3)	G-1

I. EROSION AND SEDIMENT CONTROL NARRATIVE

PROJECT DESCRIPTION

Project TEA-21 SHIL 502(3) is located in Shiloh National Military Park, Harding County, Tennessee. The project is for rehabilitation, realignment and reconstruction of several roads, and the work for each road includes the following:

Sherman / Cavalry Road : Grading, aggregate base, superpave asphalt concrete pavement, bridge over Tilghman Branch, pipe replacement, and other miscellaneous work.

Woolf Field Road : Grading, aggregate base, superpave asphalt concrete pavement, and other miscellaneous work.

McClernand Road: Asphalt pavement obliteration, and other miscellaneous work.

Tent Hospital Road (Option 1): Grading, aggregate base, superpave asphalt concrete pavement, pipe replacement, and other miscellaneous work.

Pittsburg Landing Road (Option 2): Pavement overlay, grading, aggregate base, superpave asphalt concrete pavement, pipe replacement, riprap/ lawn interface, and other miscellaneous work.

Hamburg Savannah Road (Option 3): Pavement overlay, grading, aggregate base, superpave asphalt concrete pavement, pipe replacement, and other miscellaneous work.

Site Information:

Total Area of Site	5.2 ha
Area Disturbed	3.9 ha
Existing Impervious Area	2.65 ha
Proposed Impervious Area	2.67 ha

There will be no industrial discharges on-site.

EXISTING CONDITIONS

Stormwater runoff drains into Tilghman Branch, Tennessee River, and other surface waters via existing culverts and overland. The proposed Low Impact Design (LID) will treat the surface runoff for any pollutants before it goes into suface waters. There are no stormwater point source discharges directly into any surface waters, and there are no culverts in blue line streams. USFWS is in agreement that compliance with Section 7 of the Endangered Species Act has been met for the project. The terrain is rolling to flat.

CRITICAL AREAS

The land disturbances in the staging area, bridge replacement, pipe installation, riprap stabilization, and roadway and parking area construction are considered critical areas that require installation of perimeter controls (silt fence (non-intrusive), silt fence (hooked), temporary diversion berms, and check dams) to control erosion and sediment.

GENERAL GUIDELINES

The contractor is responsible for implementing the Storm Water Pollution Prevention Plan (SWPPP).

Locate the SWPPP on-site in the contractor's field office.

Post Notice of Coverage (NOC) in a publicly accessible location near the project site.

Preserve existing vegetation, trees and shrubs when possible, and where specifically shown in the plans or as directed by the CO. Do not disturb existing vegetative ground cover at a site more than 10 days before beginning construction activities at that location.

Pick up exposed litter, debris, and chemicals before anticipated storm events, or as directed by the CO.

Do not allow construction vehicles to track sediment offsite of the project limits.

Control all stormwater runoff generated by the project site. Separate and route clean, offsite runoff through or around the project using earth diversion berms, diversion channels, and culverts.

Do not discharge stormwater runoff from the roadway and work areas directly into Tilghman Branch, Tennessee River, or other surface waters.

Regularly inspect all mechanized equipment operated in or near surface waters. Perform any maintenance necessary to prevent contamination of stream waters by fuels, lubricants, hydraulic fluids, or other toxic materials.

Provide silt fence at the toe of all embankment slopes and around all stockpiled excavated roadway material. Apply mulch and turf establishment to stockpiles remaining in place longer than 14 calendar days or when directed by the CO.

SEQUENCE OF CONSTRUCTION

Obtain the CO's approval for any revisions to the sequence of construction.

1. Prior to any land disturbance or staging, install all erosion control measures according to the Erosion Control Plan (ECP).
2. Clear and grub those areas necessary for installation of perimeter sediment controls.
3. Install temporary erosion control berms, check dams, and silt fence as shown in the plans.
4. Construct proposed improvements, including bridge over Tilghman Branch, pipe culverts, riprap stabilization, and other work.
5. Stabilize finished slopes and other disturbed areas, including any soil disturbed as a result of removal of sediment controls.
6. Obtain approval from the Tennessee Department of Environment and Conservation (TDEC) inspector before removing controls.

U.S. DEPARTMENT OF TRANSPORTATION
FEDERAL HIGHWAY ADMINISTRATION
EASTERN FEDERAL LANDS HIGHWAY DIVISION
STERLING, VIRGINIA

SHILOH NATIONAL MILITARY PARK

EROSION CONTROL NARRATIVE

Sheet 1 of 2

6/6/2008 12:01:38 PM M:\Projects\shil\502(3)\proj_dev\CADD\e&cl-econarr.dgn

NPS NO.	REG	STATE	PROJECT	SHEET NO.
304 / 41,920	SE	TN	TEA-21 SHIL 502(3)	G-2

II. EROSION AND SEDIMENT CONTROL MEASURES

STRUCTURAL MEASURES WILL INCLUDE

Silt Fence (EMI57-A & EMI57-B): A system of silt fence is proposed for filtering runoff from disturbed areas before it enters any environmentally sensitive areas.

Check Dam (MI57-6): A system of temporary check dams (riprap class I) is proposed for filtering sediment from runoff and reducing the velocity of runoff in the existing ditches before it enters any environmentally sensitive areas.

Temporary Erosion Control Berm (MI57-7): A system of temporary earth berms is proposed in select locations to prevent clean water from entering work areas. Seed and mulch all toe-of-fill berms immediately after berm construction.

Temporary Diversion Berm (EMI57-C): A system of temporary diversion berms (sandbags and plastic sheeting) is proposed to prevent clean water from entering work areas that will be dewatered, and to contain sediment-laden water within the dewatering area.

Water Filtration Bag (EMI57-D): A manufactured geotextile product is proposed for filtering and containing sediment in water that is pumped from the work area during dewatering operations, before the water is released into environmentally sensitive areas.

VEGETATIVE MEASURES WILL INCLUDE

Following initial soil disturbance or redisturbance, complete permanent or temporary stabilization within ten (10) calendar days on the surface of all perimeter controls, dikes, swales, ditches, perimeter slopes, and all slopes greater than 1 vertical to 2 horizontal (1:2); and within fourteen (14) calendar days on all other disturbed or graded areas on the project site.

Stabilize all disturbed areas no more than 10 days after construction activity has temporarily or permanently ceased. Stabilization will be in the form of permanent turf establishment.

MAINTENANCE

Unless stated otherwise, construct and maintain all vegetative and structural erosion control practices according to the FP-03 (metric units), Section 157.

Inspect all erosion and sediment control measures every 72 hours, or more frequently where specified in the plans or directed by the CO, and after each significant rainfall. Identify any damaged devices and assess the adequacy of the ECP. Repair or replace all damaged erosion and sediment control devices by the end of the day. Clean all sediment control devices when they become half full of sediment, or as directed by the CO. Dispose of sediment by spreading on the site at locations approved by the CO, or by hauling offsite.

If visible sedimentation is found off-site, take immediate measures to clean up the site. Submit suggested improvements to the ECP to the CO for approval. Document the inspections according to Subsection 107.01.

Silt Fence: Check silt fence for undermining or deterioration of the fabric. Remove the accumulated sediment in order to ensure proper functioning of the silt fence installation.

Check Dam: Check temporary check dam for undermining or deterioration. Remove the accumulated sediment and rearrange the riprap in order to ensure proper functioning of the check dams.

Temporary Erosion Control Berm: Check temporary earth berms for undermining, damage, or failure. Replace damaged earth berm and rearrange the riprap in order to ensure proper functioning of the temporary erosion control berm installation.

Temporary Diversion Berm: Check temporary diversion berms for undermining, damage, or leakage. Repair or replace damaged sandbags or plastic lining to ensure proper functioning of the temporary diversion berm installation.

Water Filtration Bag: Check water filtration bags daily during dewatering operations for punctures, tears, or other damage, and for capacity. Immediately cease pumping and replace damaged filtration bags, or bags that have reached their rated capacity.

U.S. DEPARTMENT OF TRANSPORTATION
FEDERAL HIGHWAY ADMINISTRATION
EASTERN FEDERAL LANDS HIGHWAY DIVISION
STERLING, VIRGINIA

SHILOH NATIONAL MILITARY PARK

EROSION CONTROL NARRATIVE

6/6/2008 12:01:54 PM M:\Projects\shil\502(3)\proj_dev\CADD\e&cl-ecnarr.dgn

NPS NO.	REG	STATE	PROJECT	SHEET NO.
304 41,920	SE	TN	TEA-21 SHIL 502(3)	G-3

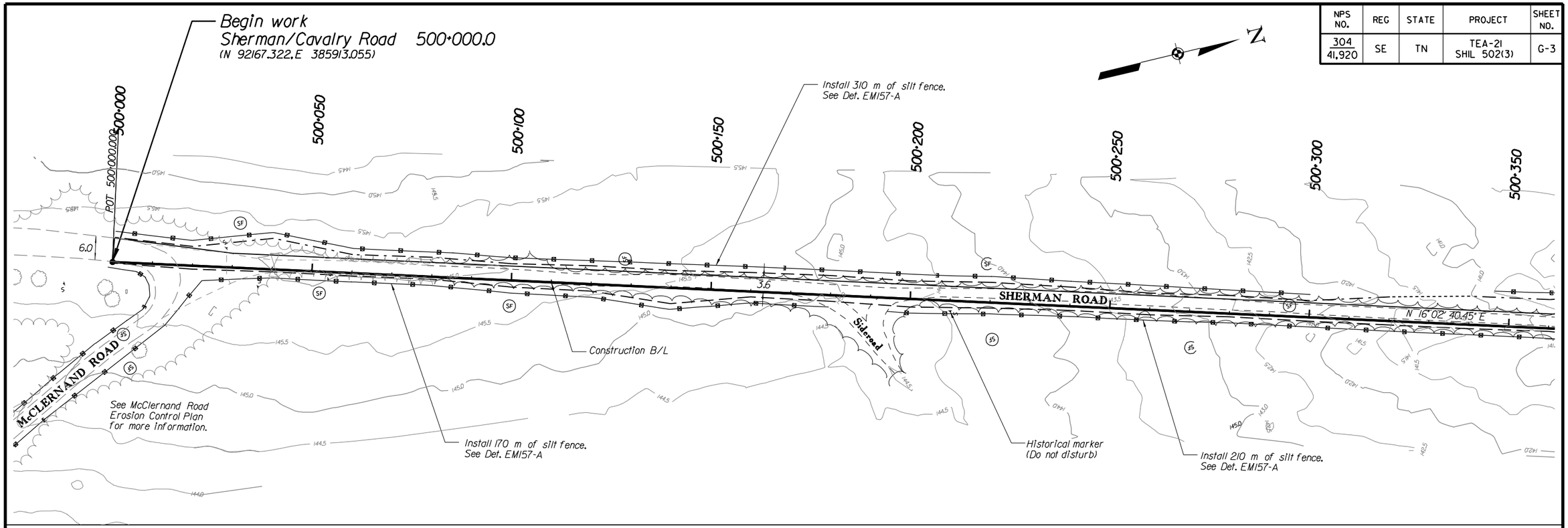

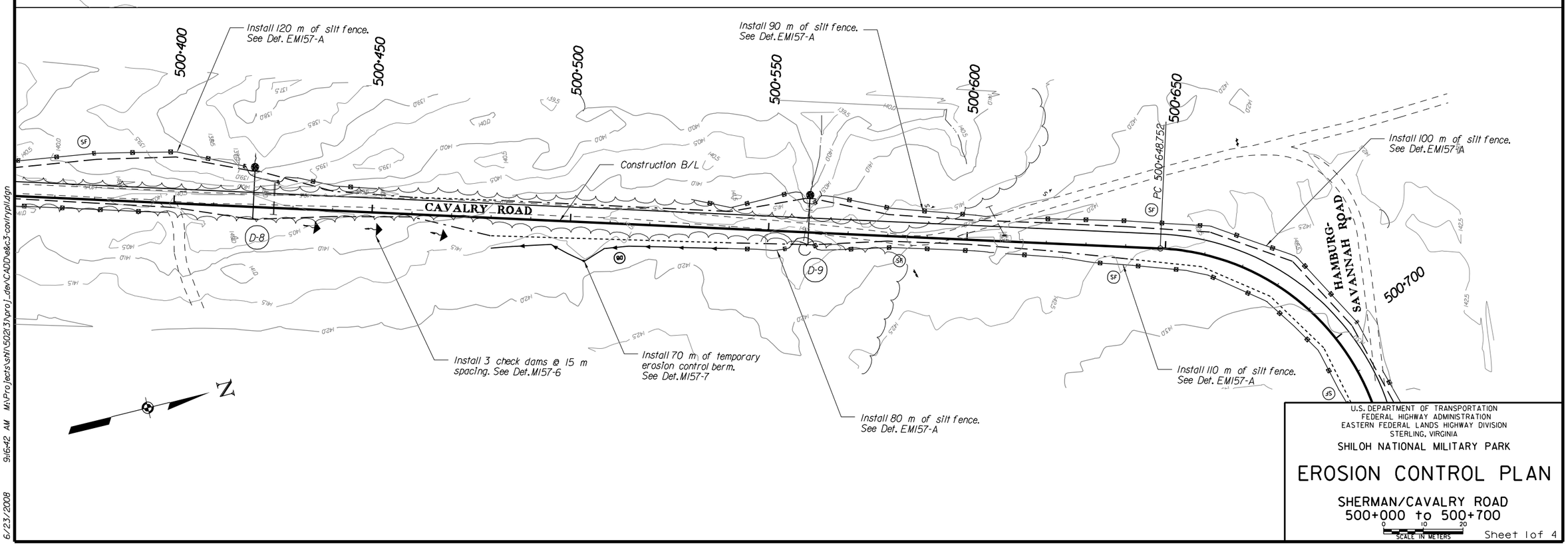

U.S. DEPARTMENT OF TRANSPORTATION
FEDERAL HIGHWAY ADMINISTRATION
EASTERN FEDERAL LANDS HIGHWAY DIVISION
STERLING, VIRGINIA

SHILOH NATIONAL MILITARY PARK

EROSION CONTROL PLAN

SHERMAN/CAVALRY ROAD
500+000 to 500+700

0 10 20
SCALE IN METERS

Sheet 1 of 4

6/23/2008 9:16:42 AM M:\Projects\shi\502(3)\proj_dev\CADD\e&c3-cavlrypll.dgn

NPS NO.	REG	STATE	PROJECT	SHEET NO.
304 41,920	SE	TN	TEA-21 SHIL 502(3)	G-4

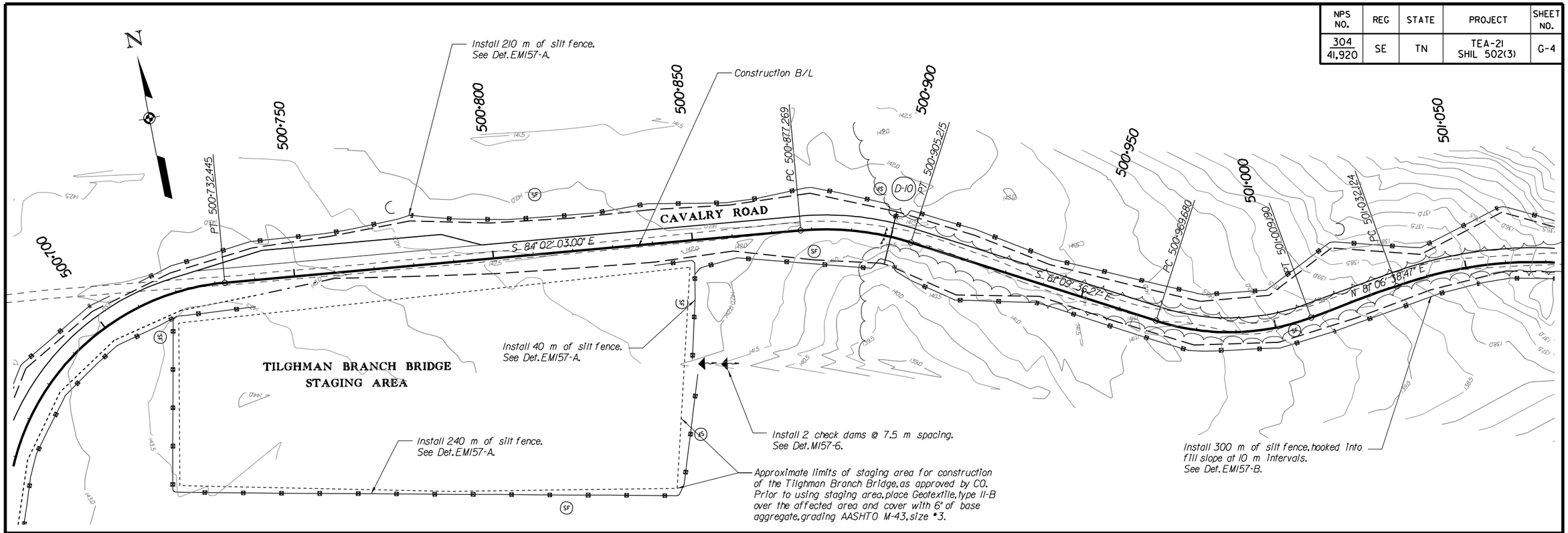

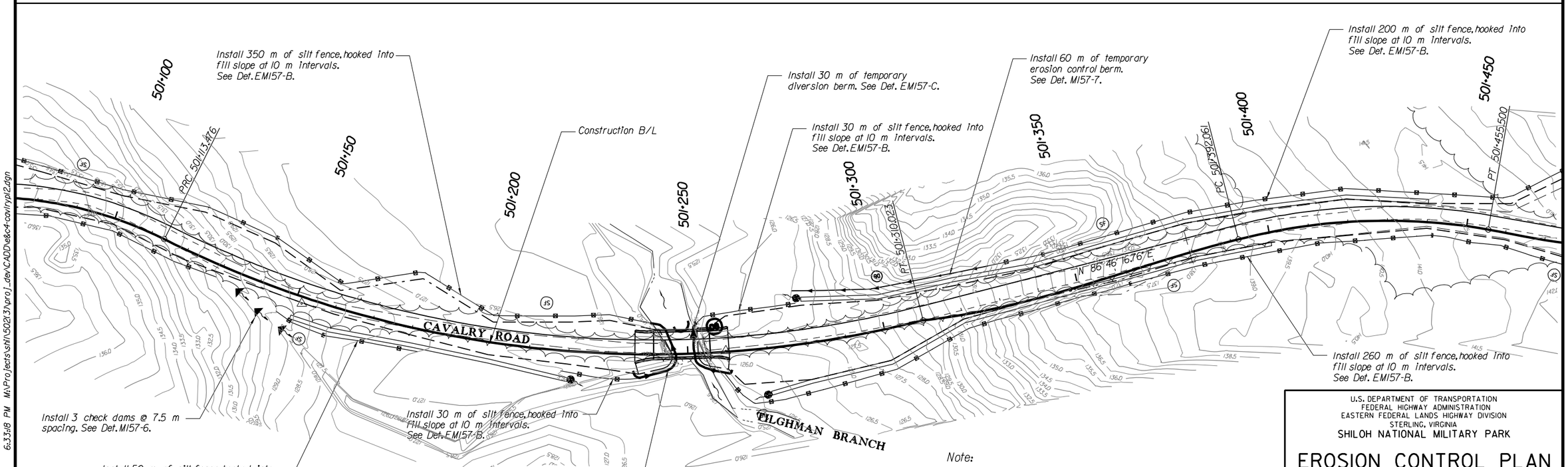

Note:

Do not install more than one temporary diversion berm in Tilghman Branch at one time during removal and/or construction of the bridge piers and abutments. Install temporary diversion berm with a minimum overtopping elevation of Q2 WSEL. See Temporary Diversion Berm Minimum Elevation table on Detail EM157-C.

U.S. DEPARTMENT OF TRANSPORTATION
FEDERAL HIGHWAY ADMINISTRATION
EASTERN FEDERAL LANDS HIGHWAY DIVISION
STERLING, VIRGINIA

SHILOH NATIONAL MILITARY PARK

EROSION CONTROL PLAN

SHERMAN/CAVALRY ROAD
500+700 to 501+400

0 10 20
SCALE IN METERS

Sheet 2 of 4

6/3/2008 6:33:48 PM M:\Projects\shl\502(3)\proj_dev\CADD\e8c4-cov1ryp12.dgn

NPS NO.	REG	STATE	PROJECT	SHEET NO.
304 / 41,920	SE	TN	TEA-21 SHIL 502(3)	G-5

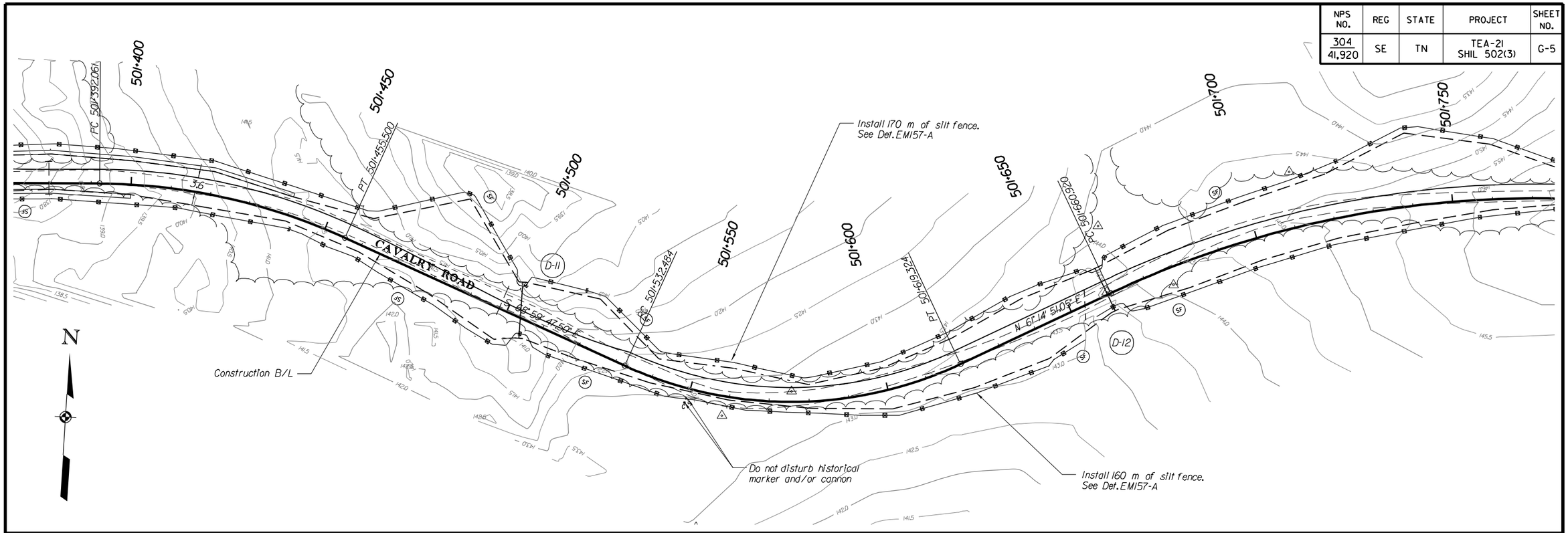

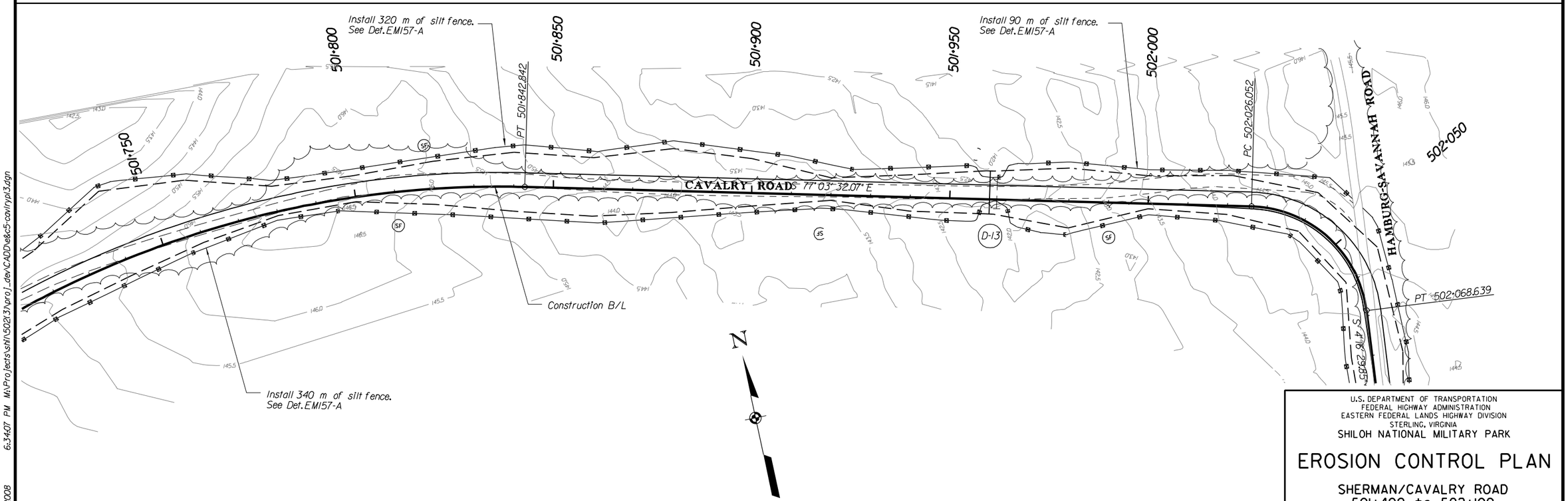

U.S. DEPARTMENT OF TRANSPORTATION
FEDERAL HIGHWAY ADMINISTRATION
EASTERN FEDERAL LANDS HIGHWAY DIVISION
STERLING, VIRGINIA

SHILOH NATIONAL MILITARY PARK

EROSION CONTROL PLAN

SHERMAN/CAVALRY ROAD
501+400 to 502+100

0 10 20
SCALE IN METERS

Sheet 3 of 4

6/3/2008 6:34:07 PM M:\Projects\sh\502(3)\proj_dev\CADD\e&c5-cov1rpl3.dgn

NPS NO.	REG	STATE	PROJECT	SHEET NO.
304 / 41,920	SE	TN	TEA-21 SHIL 502(3)	G-6

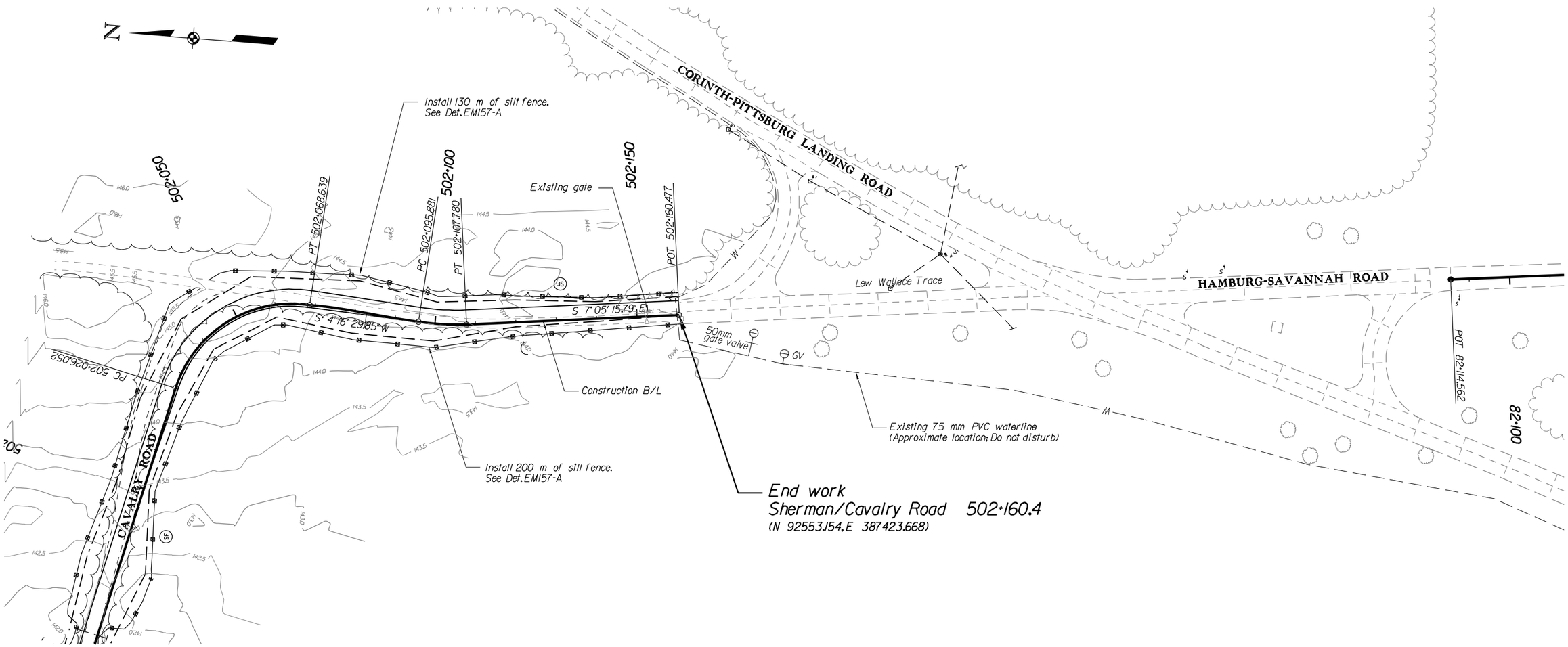

U.S. DEPARTMENT OF TRANSPORTATION
FEDERAL HIGHWAY ADMINISTRATION
EASTERN FEDERAL LANDS HIGHWAY DIVISION
STERLING, VIRGINIA

SHILOH NATIONAL MILITARY PARK

EROSION CONTROL PLAN

SHERMAN/CAVALRY ROAD
502+100 to 502+160.4

0 10 20
SCALE IN METERS

Sheet 4 of 4

6/3/2008 6:35:22 PM M:\Projects\shl\502(3)\proj_dev\CADD\e&c6-cov\rypl4.dgn

NPS NO.	REG	STATE	PROJECT	SHEET NO.
304 41,920	SE	TN	TEA-21 SHIL 502(3)	G-7

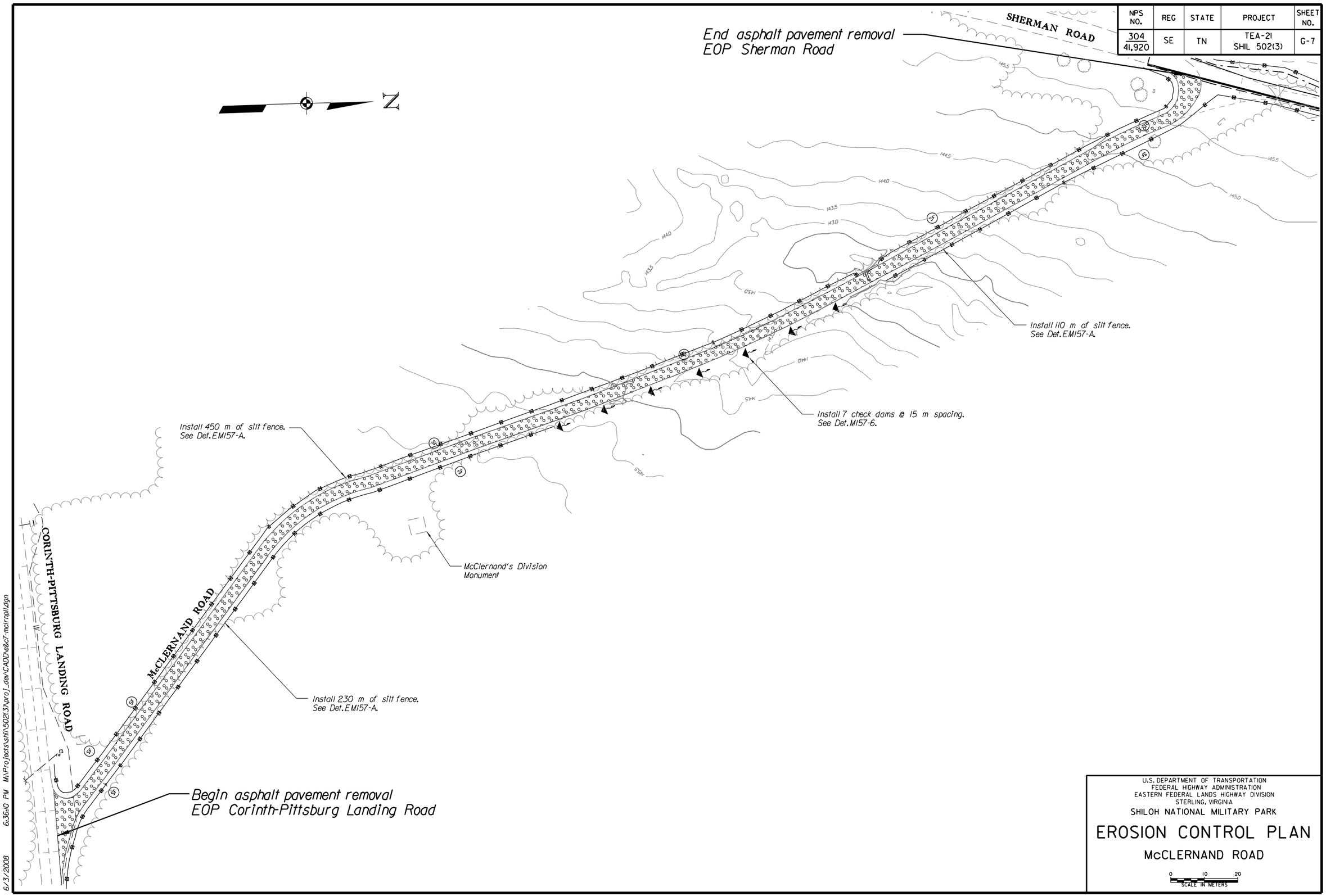

U.S. DEPARTMENT OF TRANSPORTATION
FEDERAL HIGHWAY ADMINISTRATION
EASTERN FEDERAL LANDS HIGHWAY DIVISION
STERLING, VIRGINIA

SHILOH NATIONAL MILITARY PARK

EROSION CONTROL PLAN

McCLERNAND ROAD

0 10 20
SCALE IN METERS

6/3/2008 6:36:10 PM M:\Projects\shil\502(3)\proj_dev\CADD\e8c7-mclrnpll.dgn

NPS NO.	REG	STATE	PROJECT	SHEET NO.
304 / 41,920	SE	TN	TEA- 21 SHIL 502(3)	G-8

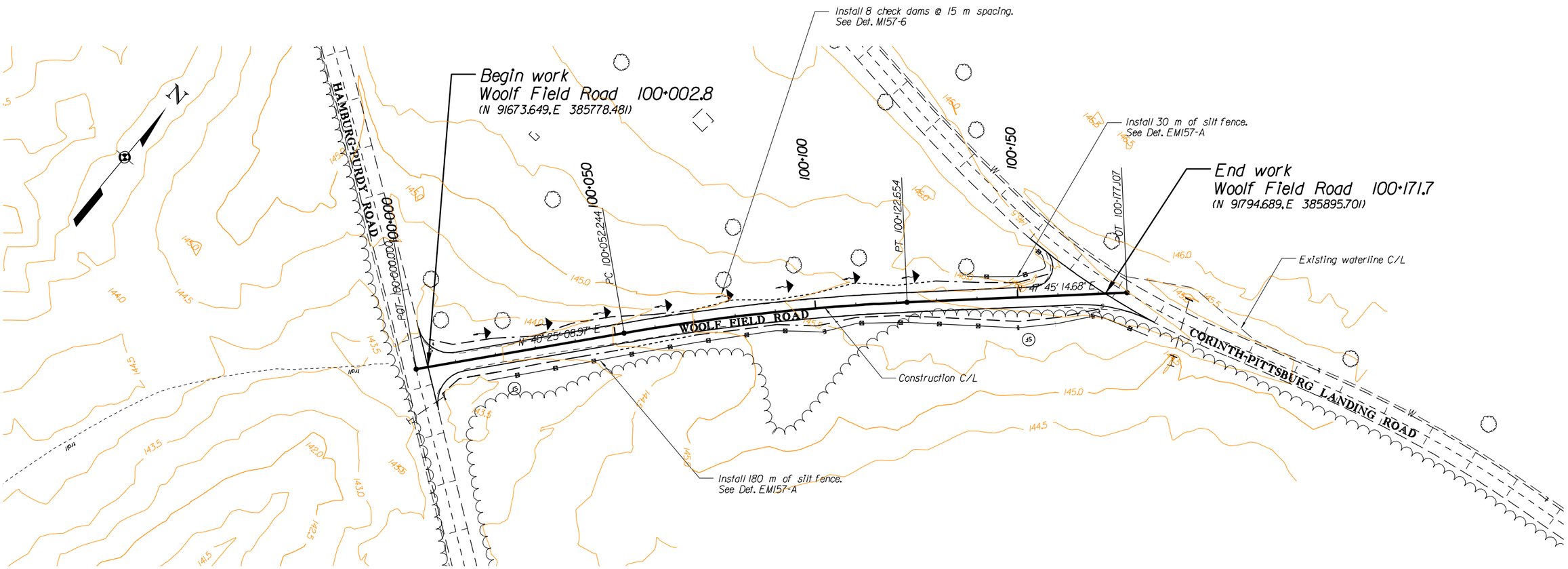

U.S. DEPARTMENT OF TRANSPORTATION
FEDERAL HIGHWAY ADMINISTRATION
EASTERN FEDERAL LANDS HIGHWAY DIVISION
STERLING, VIRGINIA

SHILOH NATIONAL MILITARY PARK

EROSION CONTROL PLAN

WOOLF FIELD ROAD
100+000 to 100+177.107

0 10 20
SCALE IN METERS

6/3/2008 6:36:55 PM M:\Projects\sh\502(3)\proj_dev\CADD\e&c8-woolf.pp.dgn

NPS NO.	REG	STATE	PROJECT	SHEET NO.
304 41,920	SE	TN	TEA-21 SHIL 502(3)	G-9

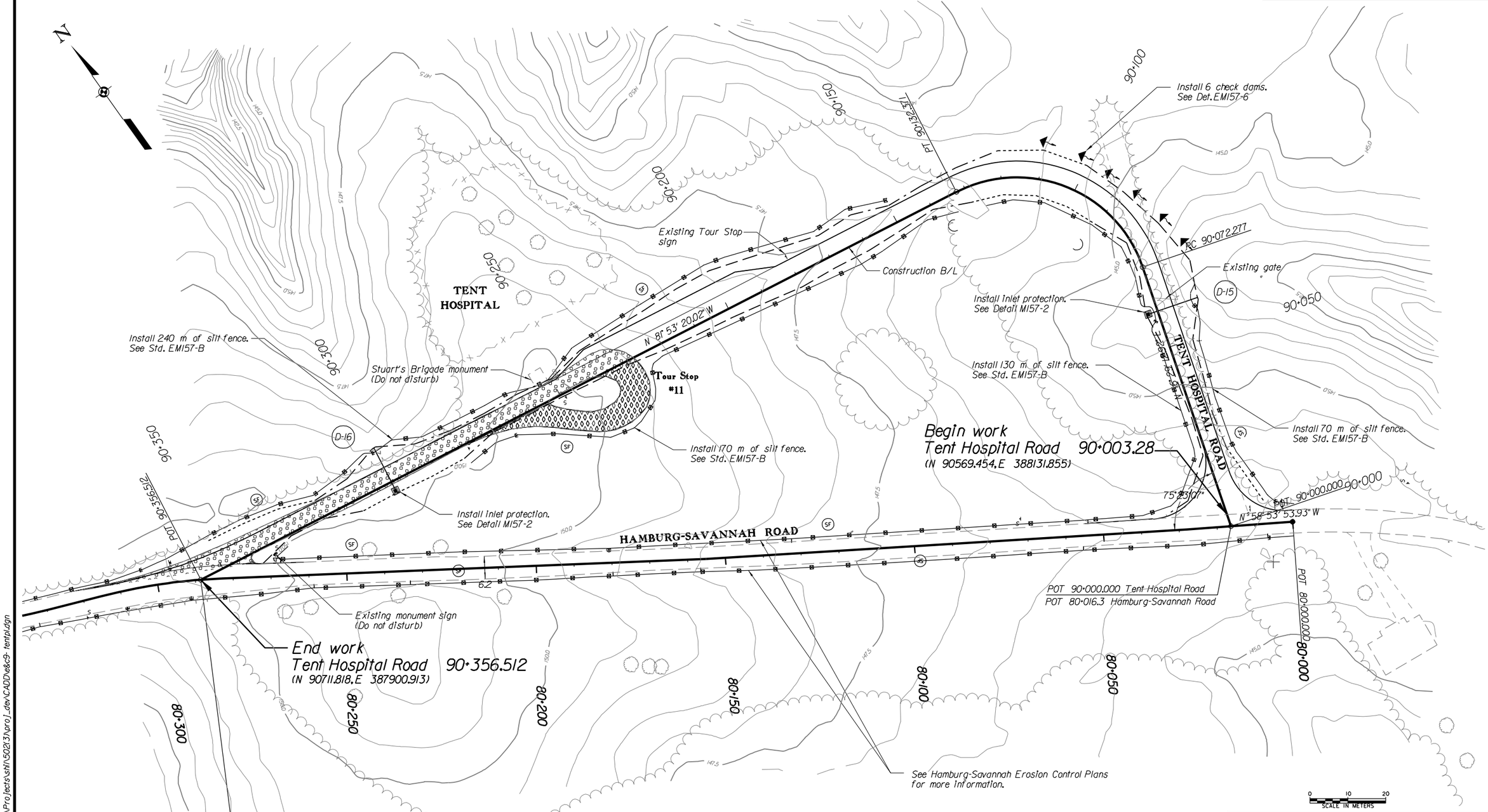

U.S. DEPARTMENT OF TRANSPORTATION
FEDERAL HIGHWAY ADMINISTRATION
EASTERN FEDERAL LANDS HIGHWAY DIVISION
STERLING, VIRGINIA

SHILOH NATIONAL MILITARY PARK

EROSION CONTROL PLAN

TENT HOSPITAL ROAD
90+000 to 90+356.512

OPTION 1

6/3/2008 6:40:58 PM M:\Projects\shil\502(3)\proj_dev\CADD\e&c9-tentpl.dgn

NPS NO.	REG	STATE	PROJECT	SHEET NO.
304 / 41,920	SE	TN	TEA-21 SHIL 502(3)	G-10

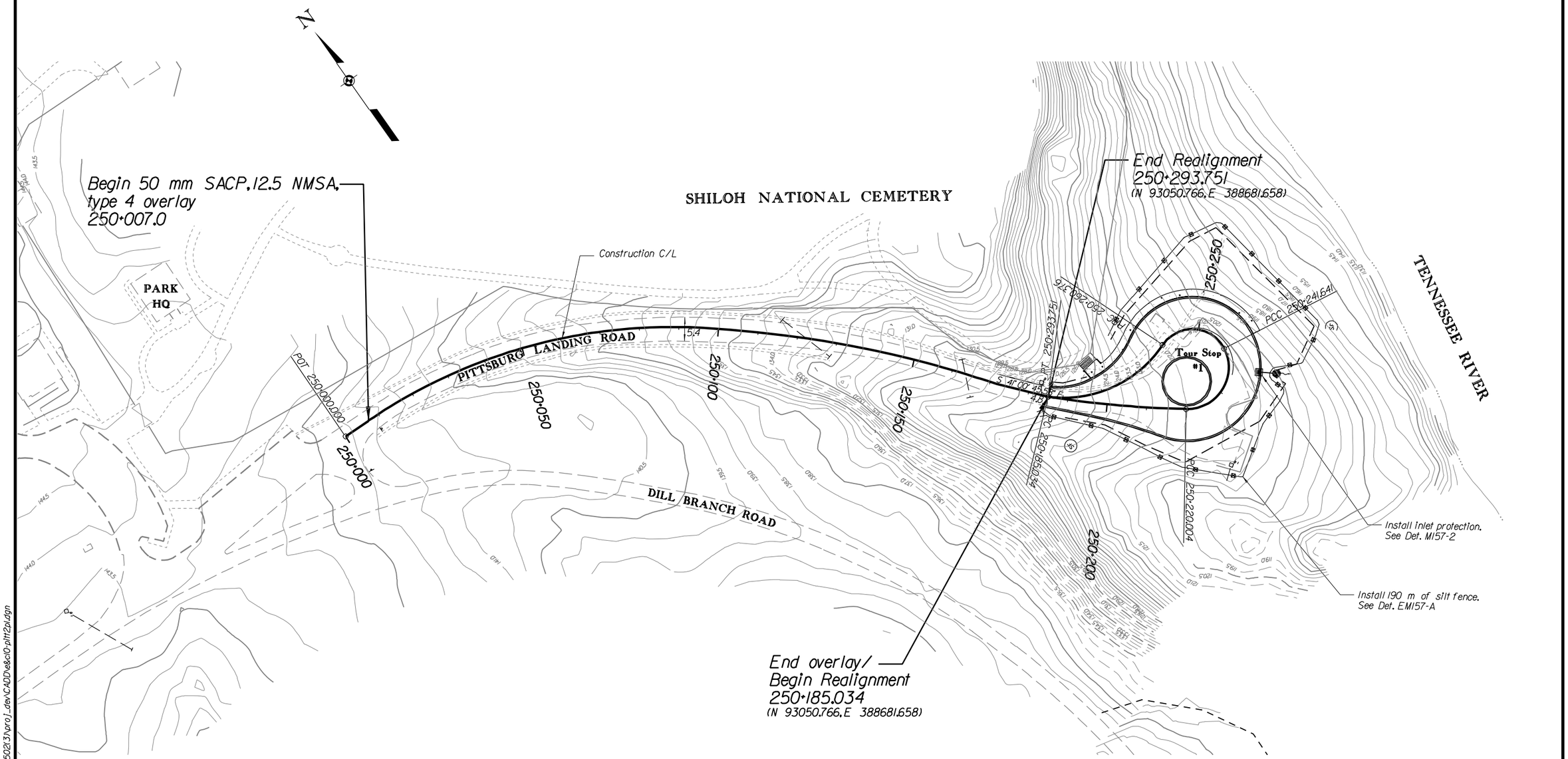

0 10 20
SCALE IN METERS

U.S. DEPARTMENT OF TRANSPORTATION
FEDERAL HIGHWAY ADMINISTRATION
EASTERN FEDERAL LANDS HIGHWAY DIVISION
STERLING, VIRGINIA

SHILOH NATIONAL MILITARY PARK

EROSION CONTROL PLAN

PITTSBURG LANDING ROAD
250+000 to 250+293.751

OPTION 2

6/3/2008 6:44:34 PM M:\Projects\shil\502(3)\proj_dev\CADD\e&c\Option2pl.dgn

NPS NO.	REG	STATE	PROJECT	SHEET NO.
304 41,920	SE	TN	TEA-21 SHIL 502(3)	G-11

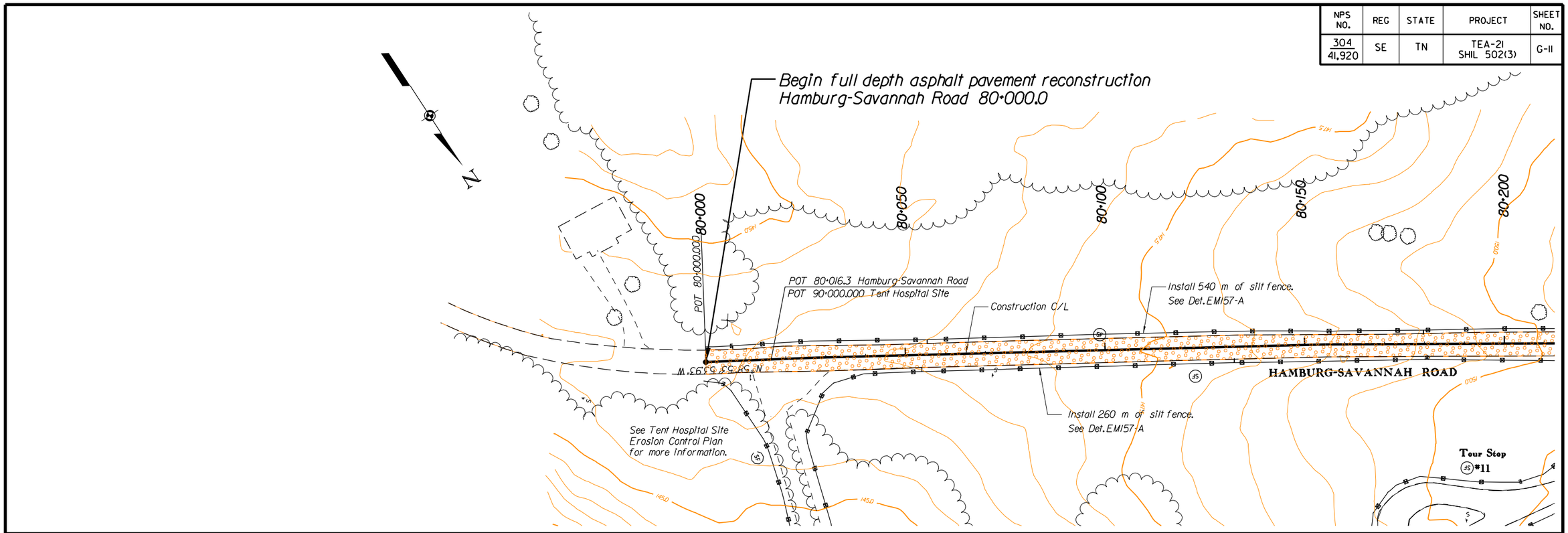

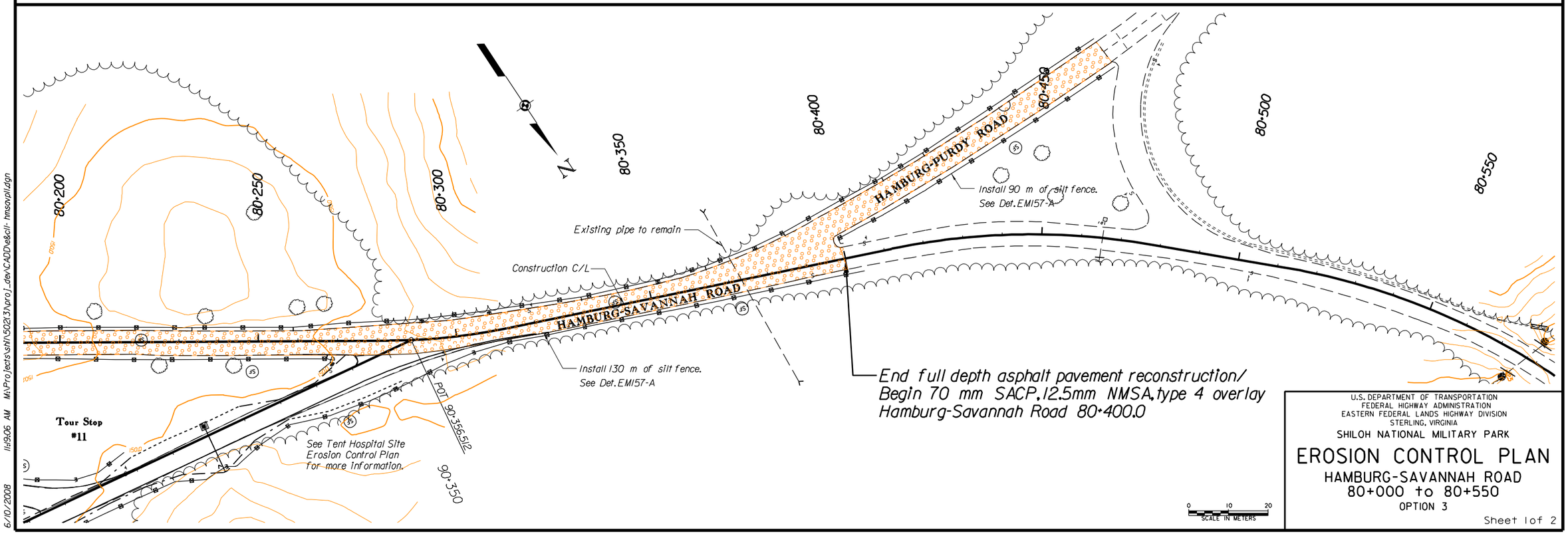

U.S. DEPARTMENT OF TRANSPORTATION
FEDERAL HIGHWAY ADMINISTRATION
EASTERN FEDERAL LANDS HIGHWAY DIVISION
STERLING, VIRGINIA

SHILOH NATIONAL MILITARY PARK

EROSION CONTROL PLAN

HAMBURG-SAVANNAH ROAD
80+000 to 80+550

OPTION 3

Sheet 1 of 2

6/10/2008 11:19:06 AM M:\Projects\shil\502(3)\proj_dev\CADD\e&c\l- hmsavpl1.dgn

NPS NO.	REG	STATE	PROJECT	SHEET NO.
304 / 41,920	SE	TN	TEA-21 SHIL 502(3)	G-12

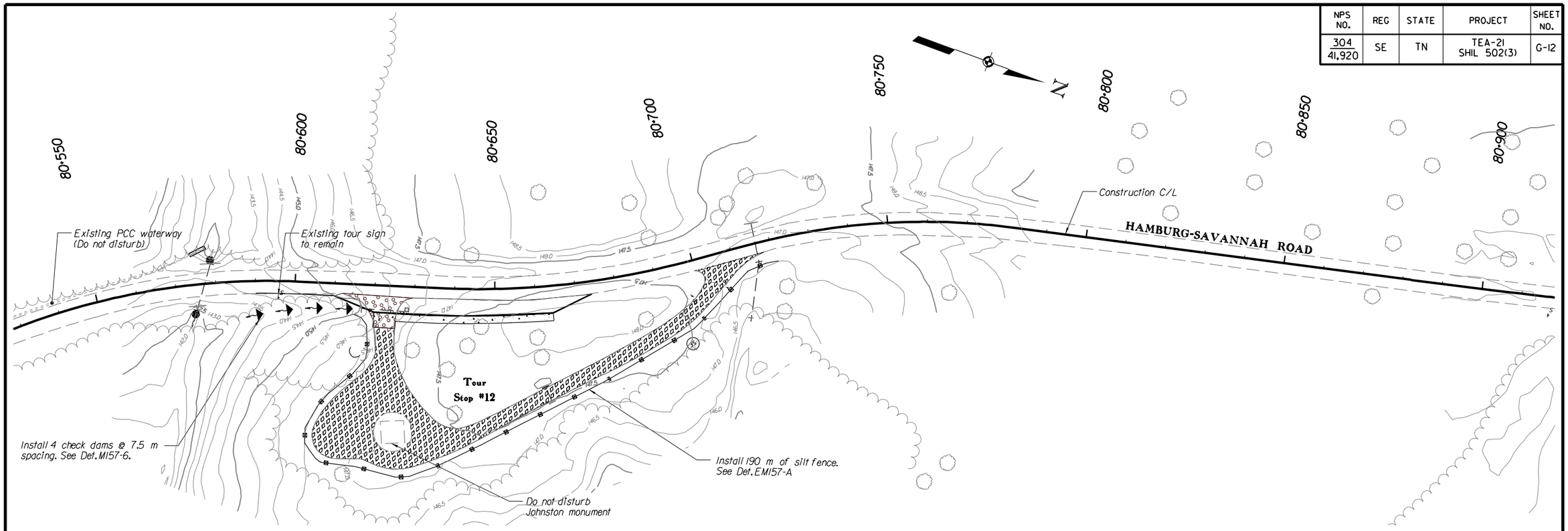

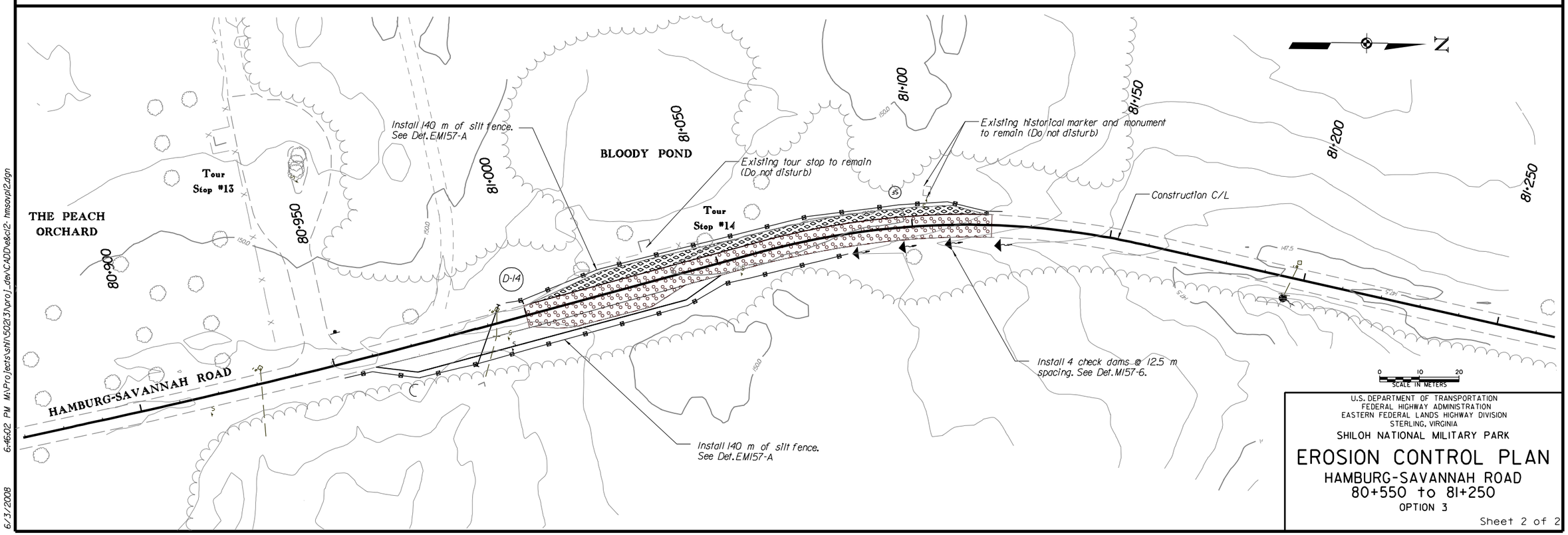

U.S. DEPARTMENT OF TRANSPORTATION
FEDERAL HIGHWAY ADMINISTRATION
EASTERN FEDERAL LANDS HIGHWAY DIVISION
STERLING, VIRGINIA

SHILOH NATIONAL MILITARY PARK

EROSION CONTROL PLAN

HAMBURG-SAVANNAH ROAD
80+550 to 81+250

OPTION 3

Sheet 2 of 2

6:46:02 PM M:\Projects\shil\502(3)\proj_dev\CADD\e&c\2- hmsoplpl2.dgn

6/3/2008

NPS NO.	REG	STATE	PROJECT	SHEET NO.
304 / 41,920	SE	TN	TEA-21 SHIL 502(3)	H-1

TRAFFIC CONTROL GENERAL NOTES

1. The CO will approve the final location and spacing of all traffic control devices.

2. The CO will approve the obliteration of any existing roads.

3. Pedestrian access, including handicapped, must be maintained at all times to the Visitor Center, Book store, & Shiloh National Cemetery.

4. Cover or remove all conflicting signs and striping during construction operations, as directed by the CO (no-pay).

5. Schedule all overlay work after completion of the realignment and reconstruction sections.

6. Minimize construction traffic on Parks roads. The Contractor will be required to repair or replace in an acceptable manner, as approved by the CO, all damages to existing roads resulting from their use at no cost to the Government.

7. During non-work periods, all work areas on roads open to the public must be left at grade and flush with the surrounding pavement.

8. The field office will be located at the Livingston House, near the Highway 22/ Highway 142 intersection. Two staging areas have been identified at the following locations:

   a. Livingston House
   b. Tilghman Branch Bridge

Sherman/Cavalry Road

1. Restrict all vehicle, bicycle, and pedestrian traffic on Sherman/Cavalry Road during construction operations.

McClernand Road

1. Restrict all vehicle, bicycle, and pedestrian access to McClernand Road during pavement removal operations. All work on Sherman/Cavalry Road must be completed prior to the closure of McClernand Road.

Woolf Field Road

1. Restrict all vehicle, bicycle, and pedestrian traffic on Woolf Field Road during construction operations.

2. Construct roadway tie-ins using lane closures and/or shoulder closures on Hamburg-Purdy Road and Corinth-Pittsburg Landing Road (See Details M635-6 & M635-10).

Tent Hospital Site (Option 1)

1. Restrict all vehicle, bicycle, and pedestrian traffic on Tent Hospital Road during construction operations.

2. Construct roadway tie-ins using lane closures and/or shoulder closures Hamburg-Savannah Road (See Details M635-6 & M635-10).

Pittsburg Landing Road (Option 2)

1. Restrict all vehicle, bicycle, and pedestrian access to Pittsburg Landing (Tour Stop 1) during construction operations.

Hamburg-Savannah Road (Option 3)

1. At least one lane must remain open at all times during construction operations.

2. Overlay Hamburg-Savannah Road and other miscellaneous work using single lane closures and/or shoulder closures (See Details M635-6 & M635-10).

U.S. DEPARTMENT OF TRANSPORTATION
FEDERAL HIGHWAY ADMINISTRATION
EASTERN FEDERAL LANDS HIGHWAY DIVISION
STERLING, VIRGINIA

SHILOH NATIONAL MILITARY PARK

TRAFFIC CONTROL NARRATIVE

5/31/2008 10:51:22 AM M:\Projects\shil\502(3)\proj_dev\CADD\tcnarr.dgn

NPS NO.	REG	STATE	PROJECT	SHEET NO.
304 41,920	SE	TN	TEA-21 SHIL 502(3)	J-1

NOTES:

1. Drainage cross sections are not shown for pipe installations at existing pipe locations.
2. See Detail M602-7 for pipe installation details.
3. Modify riprap installation dimensions on Detail EM251-01, as required by the CO, to fit existing field conditions.

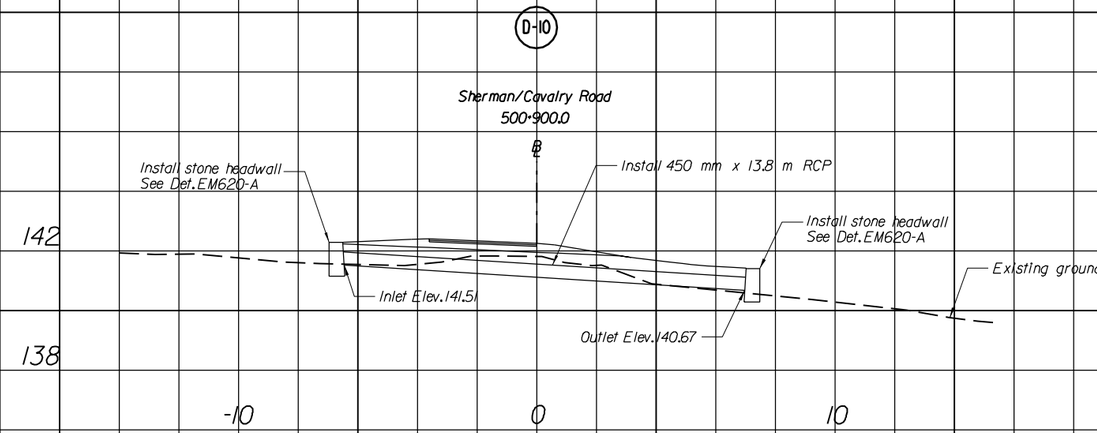

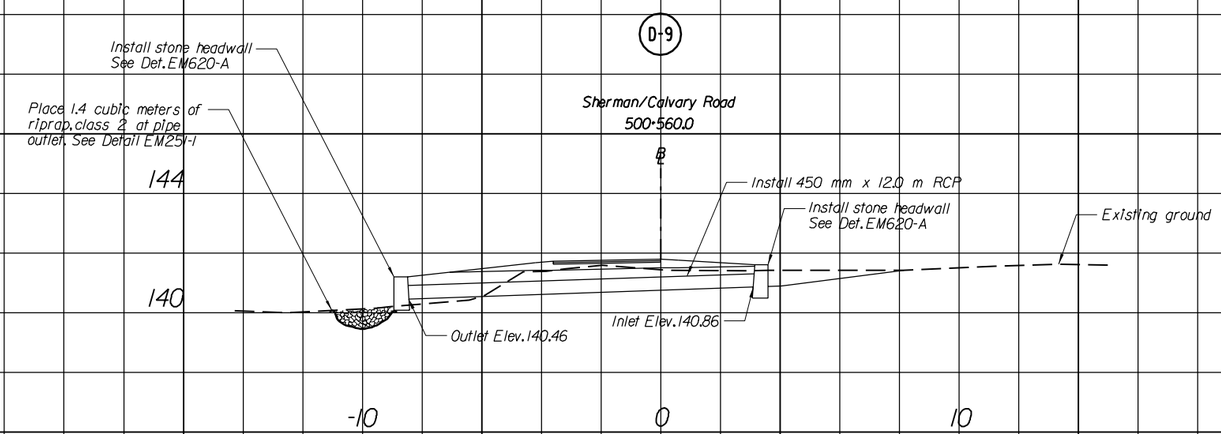

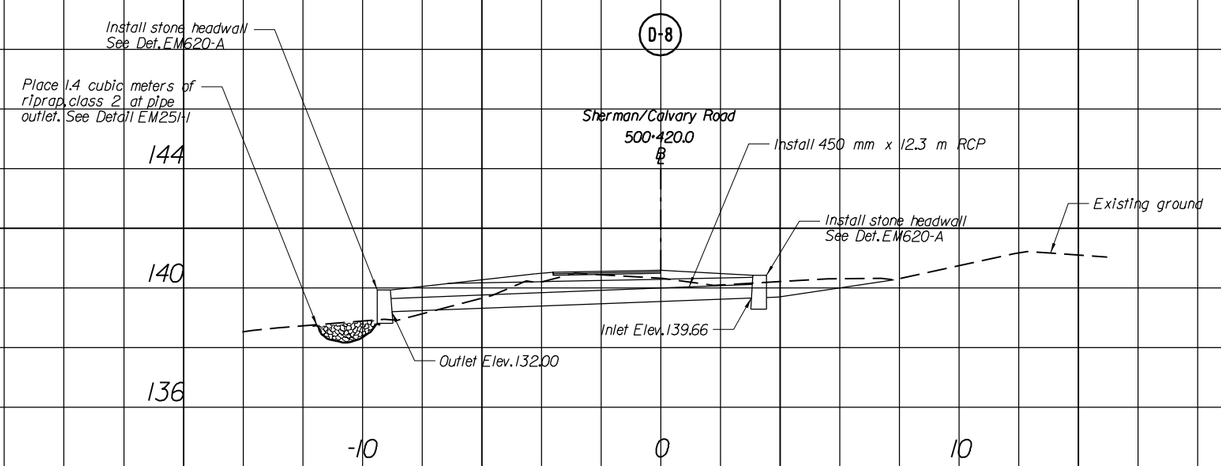

U.S. DEPARTMENT OF TRANSPORTATION
FEDERAL HIGHWAY ADMINISTATION
EASTERN FEDERAL LANDS HIGHWAY DIVISION
STERLING, VIRGINIA

SHILOH NATIONAL MILITARY PARK

DRAINAGE CROSS SECTIONS

0 2 5
SCALE IN METERS

Sheet 1 of 2

6/23/2008 10:45:37 AM M:\Projects\shil\502(3)\proj_dev\CADD\drainxs.dgn

NPS NO.	REG	STATE	PROJECT	SHEET NO.
304 / 41,920	SE	TN	TEA-21 SHIL 502(3)	J-2

NOTES:

1. Drainage cross sections are not shown for pipe installations at existing pipe locations.
2. See Detail M602-7 for pipe installation details.

D-13

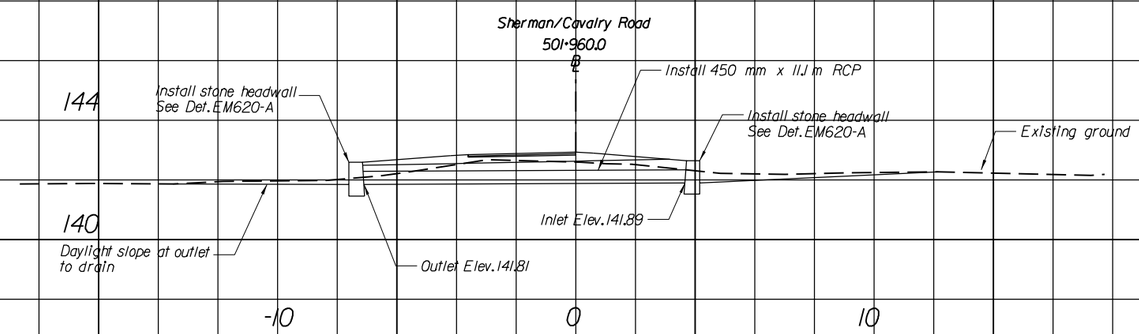

D-12

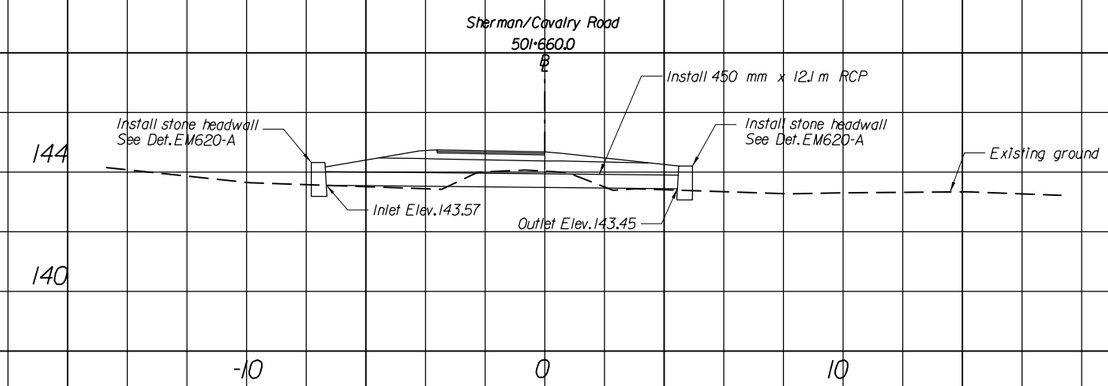

D-11

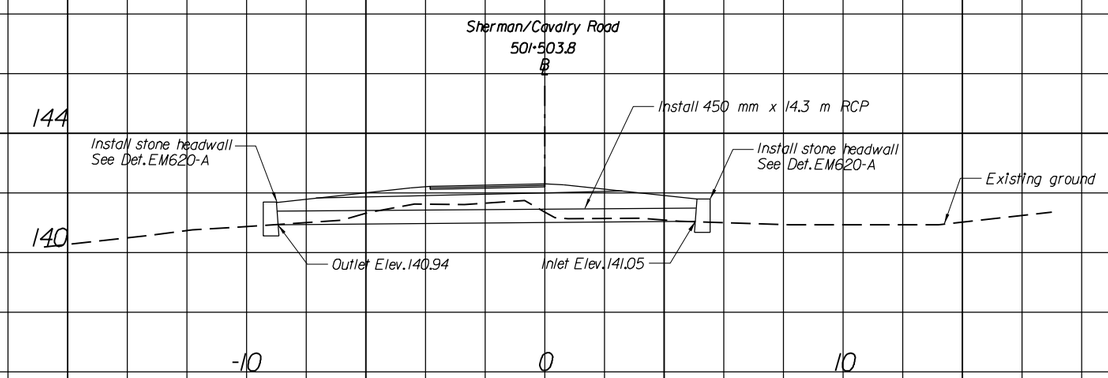

U.S. DEPARTMENT OF TRANSPORTATION
FEDERAL HIGHWAY ADMINISTATION
EASTERN FEDERAL LANDS HIGHWAY DIVISION
STERLING, VIRGINIA

SHILOH NATIONAL MILITARY PARK

DRAINAGE CROSS SECTIONS

0 2 5
SCALE IN METERS

Sheet 2 of 2

5/31/2008 10:53:46 AM M:\Projects\shil\502(3)\proj_dev\CADD\drainxs.dgn

NPS NO.	REG	STATE	PROJECT	SHEET NO.
304 / 41,920	SE	TN	TEA- 21 SHIL 502(3)	J-3

NOTE:

1. Drainage cross sections are not shown for pipe installations at existing pipe locations.
2. See Detail M602-7 for pipe installation details.

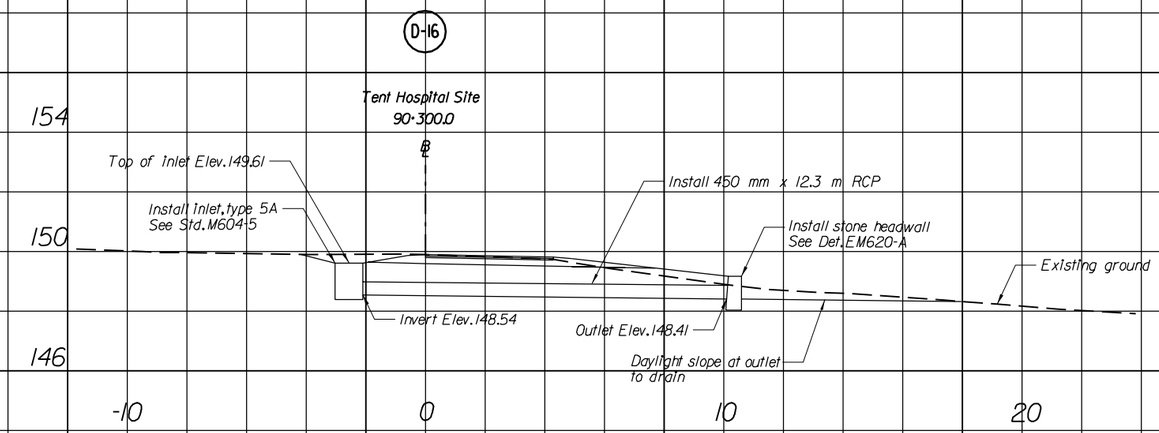

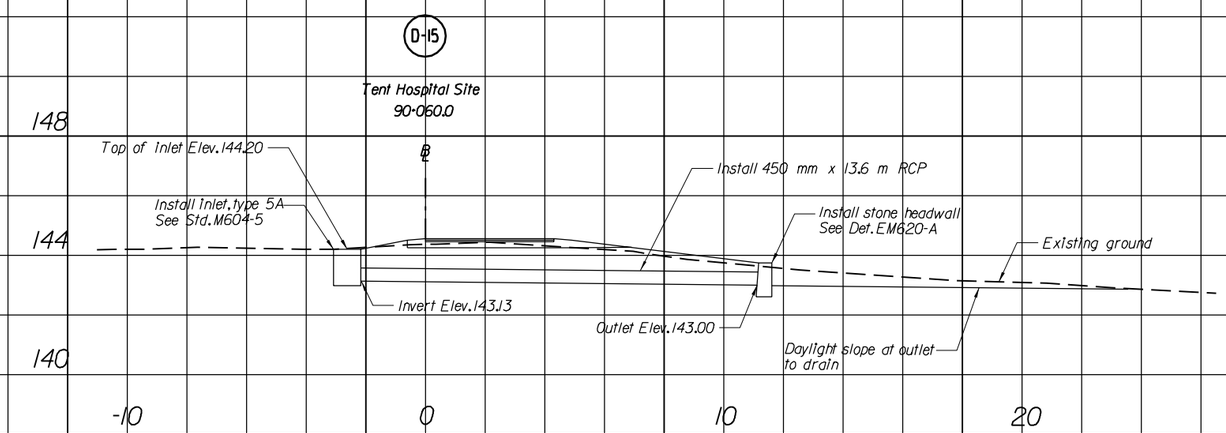

0 2 5
SCALE IN METERS

U.S. DEPARTMENT OF TRANSPORTATION
FEDERAL HIGHWAY ADMINISTATION
EASTERN FEDERAL LANDS HIGHWAY DIVISION
STERLING, VIRGINIA

SHILOH NATIONAL MILITARY PARK

DRAINAGE CROSS SECTIONS

OPTION 1

5/31/2008 10:54:53 AM M:\Projects\shl\502(3)\proj_dev\CADD\drainxs.dgn

NPS NO.	REG	STATE	PROJECT	SHEET NO.
304 / 41,920	SE	TN	TEA-21 SHIL 502(3)	J-4

NOTES:

1. Drainage cross sections are not shown for pipe installations at existing pipe locations.
2. See Detail M602-7 for pipe installation details.
3. Modify riprap installation dimensions on Detail EM251-01, as required by the CO, to fit existing field conditions.

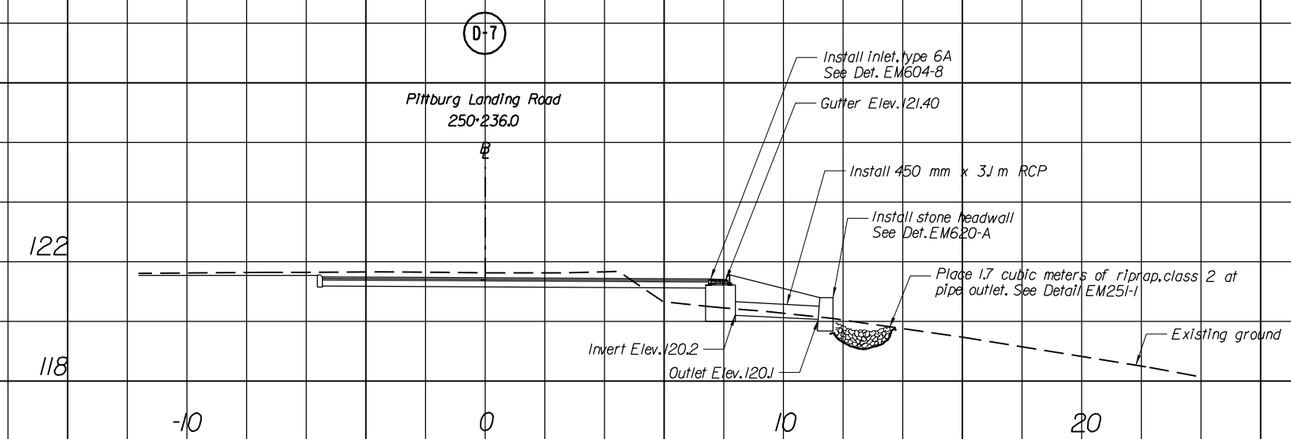

0 2 5
SCALE IN METERS

U.S. DEPARTMENT OF TRANSPORTATION
FEDERAL HIGHWAY ADMINISTATION
EASTERN FEDERAL LANDS HIGHWAY DIVISION
STERLING, VIRGINIA

SHILOH NATIONAL MILITARY PARK

DRAINAGE CROSS SECTIONS

OPTION 2

5/31/2008 10:56:27 AM M:\Projects\sfl\502(3)\proj_dev\CADD\drainxs.dgn

NPS NO.	REG	STATE	PROJECT	SHEET NO.
304 / 41,920	SE	TN	TEA- 21 SHIL 502(3)	J-5

NOTES:

1. Drainage cross sections are not shown for pipe installations at existing pipe locations.
2. See Detail M602-7 for pipe installation details.
3. Modify riprap installation dimensions on Detail EM251-01, as required by the CO. to fit existing field conditions.

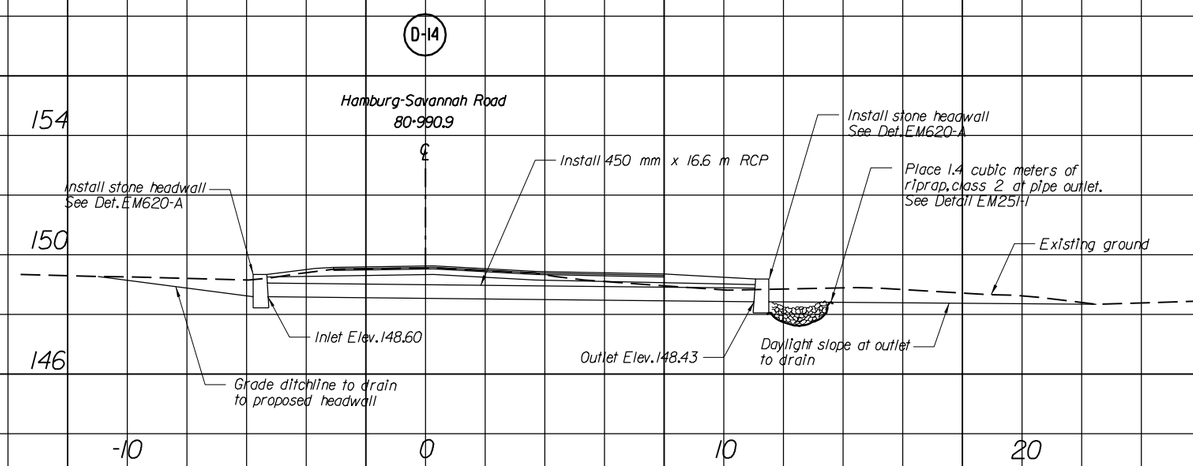

0 2 5
SCALE IN METERS

U.S. DEPARTMENT OF TRANSPORTATION
FEDERAL HIGHWAY ADMINISTATION
EASTERN FEDERAL LANDS HIGHWAY DIVISION
STERLING, VIRGINIA

SHILOH NATIONAL MILITARY PARK

DRAINAGE CROSS SECTIONS

OPTION 3

6/23/2008 10:46:52 AM M:\Projects\shil\502(3)\proj_dev\CADD\drainxs.dgn

NPS NO.	REG	STATE	PROJECT	SHEET NO.
304 / 41,920	SE	TN	TEA-21 SHIL 502(3)	K-1

Notes:

1. Unless otherwise noted, all dimensions are in English units.
2. Pittsburg Landing riprap work designed and provided by the U.S. Army Corps of Engineers, Nashville District.
3. Limits shown are approximate. Stake actual limits in the field, as directed by the CO.

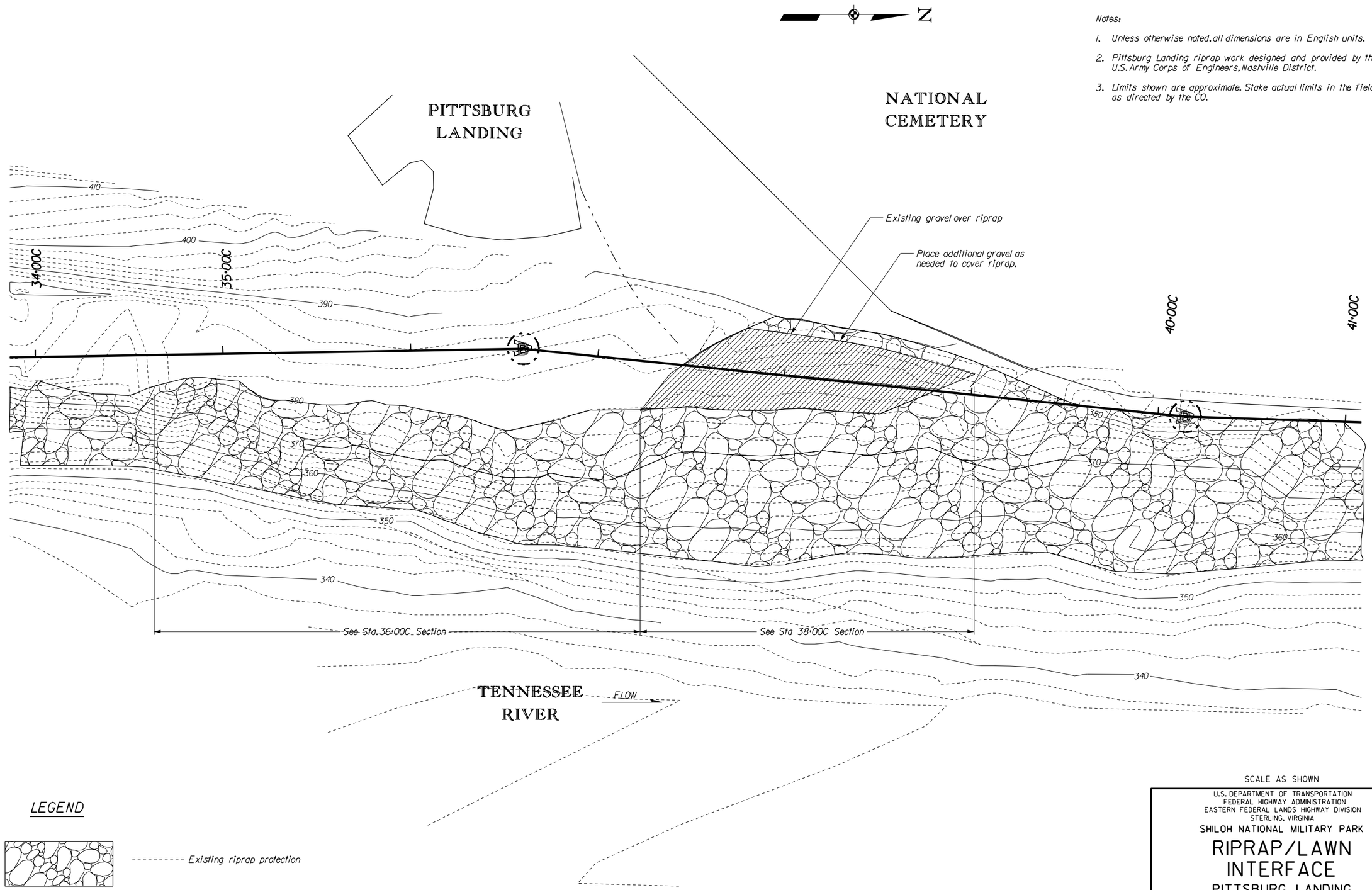

LEGEND

Existing riprap protection

SCALE AS SHOWN

U.S. DEPARTMENT OF TRANSPORTATION
FEDERAL HIGHWAY ADMINISTRATION
EASTERN FEDERAL LANDS HIGHWAY DIVISION
STERLING, VIRGINIA

SHILOH NATIONAL MILITARY PARK

RIPRAP/LAWN INTERFACE

PITTSBURG LANDING

OPTION 2

Sheet 1 of 2

5/31/2008 10:58:01 AM M:\Projects\sht\502(3)\proj_dev\CADD\riprapplan.dgn

NPS NO.	REG	STATE	PROJECT	SHEET NO.
304 / 41,920	SE	TN	TEA-21 SHIL 502(3)	K-2

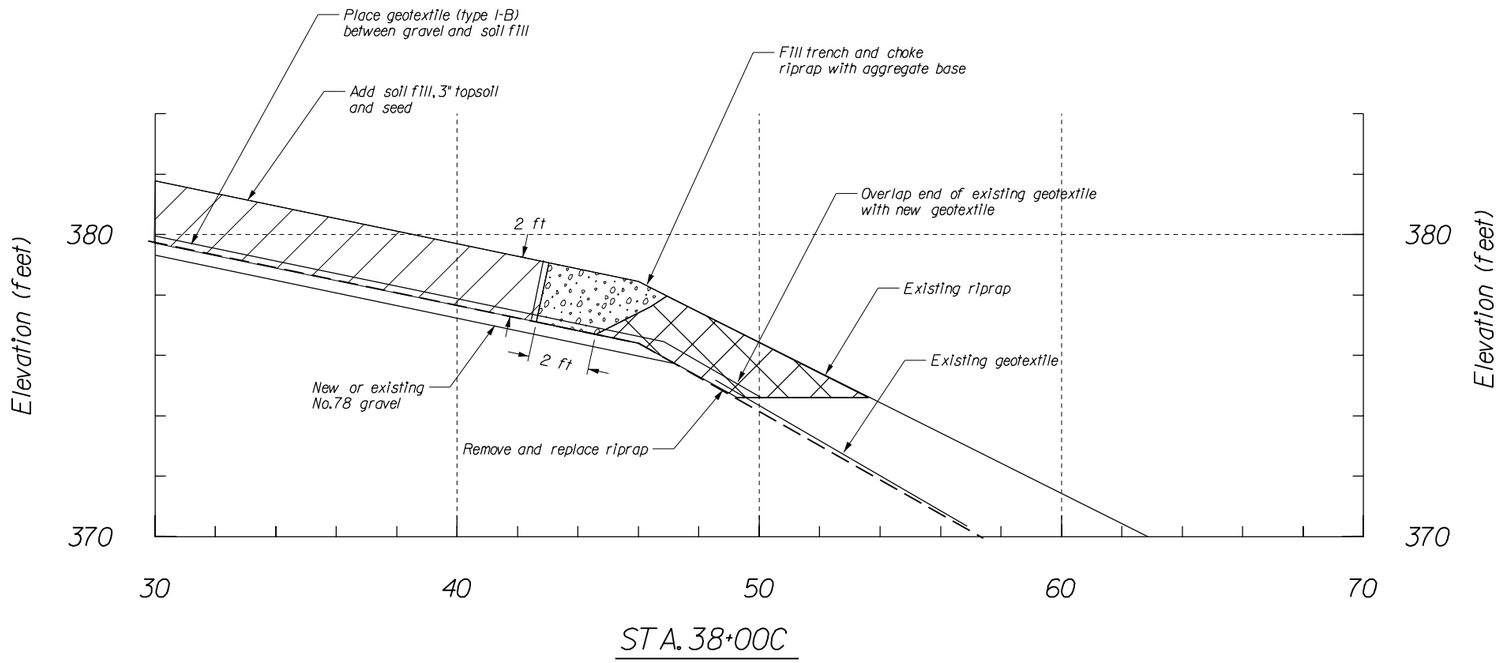

STA. 38+00C

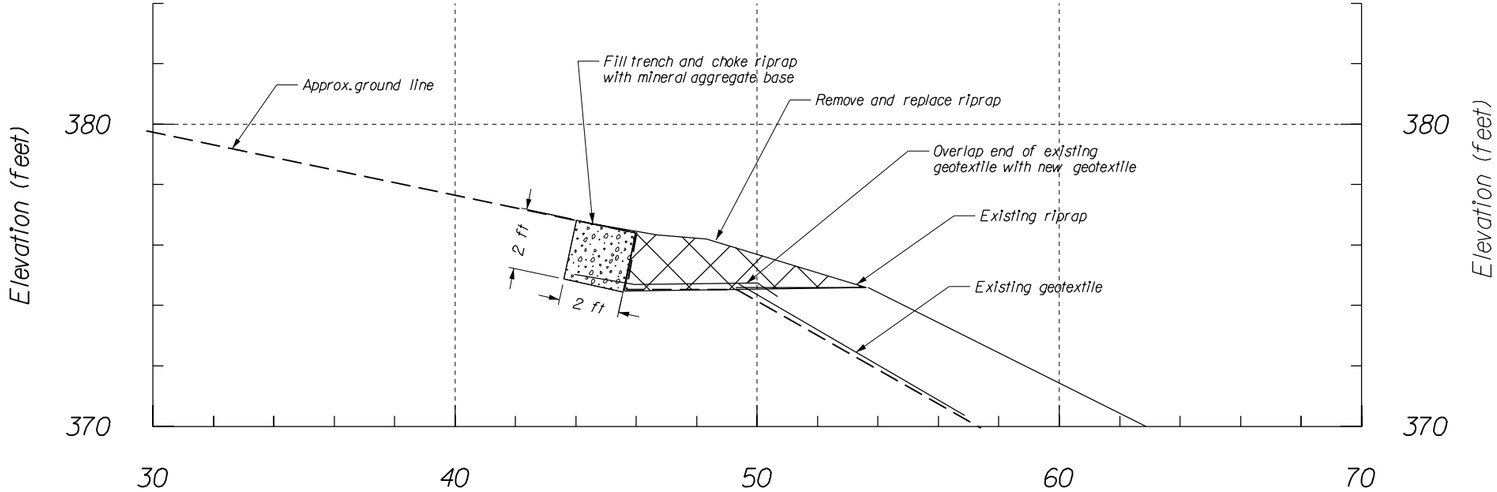

STA. 36+00C

Notes:

1. Unless otherwise noted, all dimensions are in English units.
2. Pittsburg Landing riprap work designed and provided by the U.S. Army Corps of Engineers, Nashville District.
3. Prepare soil bed and seed in accordance with Sections 624 and 625.
4. See Section 251.04 of the Special Contract Requirements for seeding requirements on all exposed riprap surfaces.

MATERIAL SPECIFICATIONS

No.78 gravel	(Section 703)
Aggregate base grading A or B	(Section 703)
Geotextile Type I-B	(Section 714)
Topsoil	(Section 713)
Seed	(Section 713)

SCALE AS SHOWN

U.S. DEPARTMENT OF TRANSPORTATION
FEDERAL HIGHWAY ADMINISTRATION
EASTERN FEDERAL LANDS HIGHWAY DIVISION
STERLING, VIRGINIA

SHILOH NATIONAL MILITARY PARK

RIPRAP/LAWN INTERFACE TYPICAL SECTIONS

PITTSBURG LANDING

OPTION 2

5/31/2008 10:59:09 AM M:\Projects\shh\502(3)\proj_dev\CADD\riprapsecs.dgn

NPS NO.	REG	STATE	PROJECT	SHEET NO.
304 41,920	SE	TN	TEA-21 SHIL 502(3)	L-1

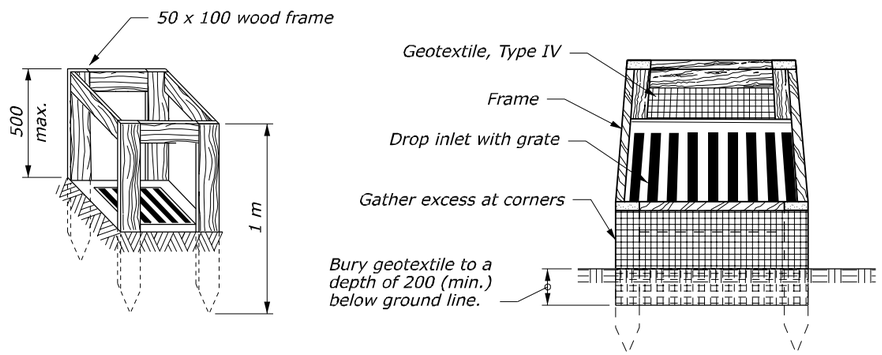

SILT FENCE DROP INLET PROTECTION (TYPE A)

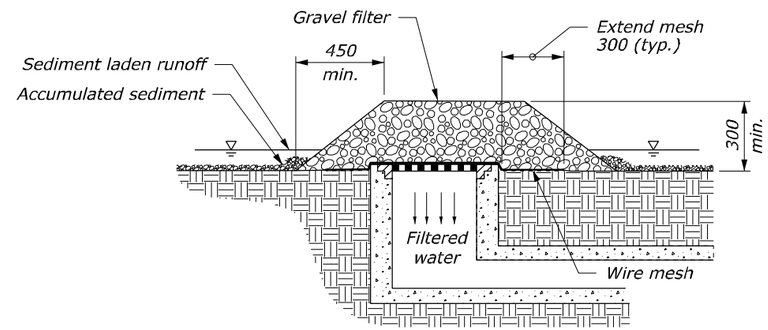

GRAVEL AND WIRE MESH DROP INLET PROTECTION (TYPE B)

NOTE:

1. For gravel filters use 50 - 75 mm diameter coarse aggregate.
2. Use wire mesh with 12 x 12 mm openings.
3. Use Type A inlet protection in sump locations only.
4. Use Type B inlet protection only in sump locations where heavy concentrated flows are not expected. Do not use where ponding around the structure might cause inconvenience or damage.
5. Dimensions without units are millimeters.

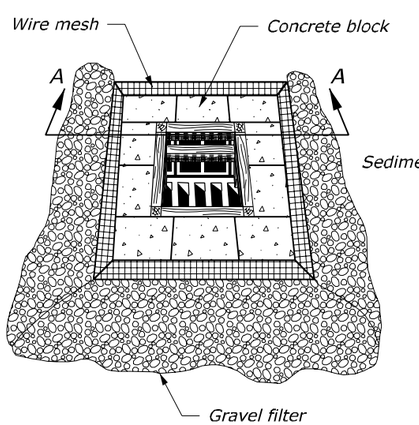

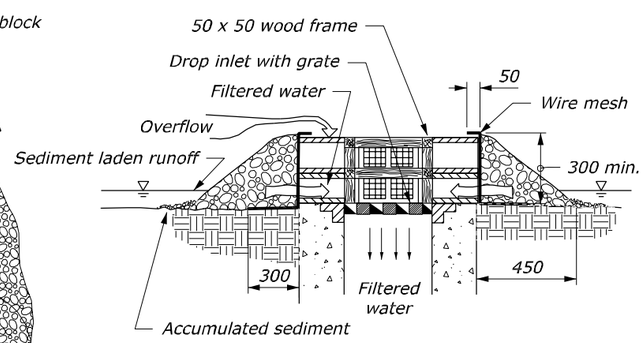

SECTION A-A

BLOCK AND GRAVEL DROP INLET PROTECTION (TYPE C)

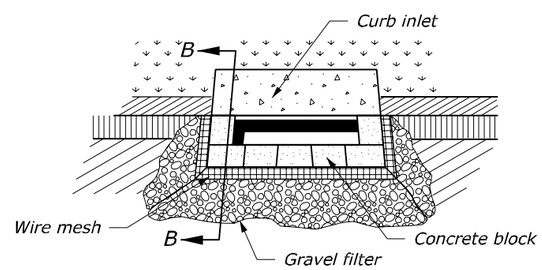

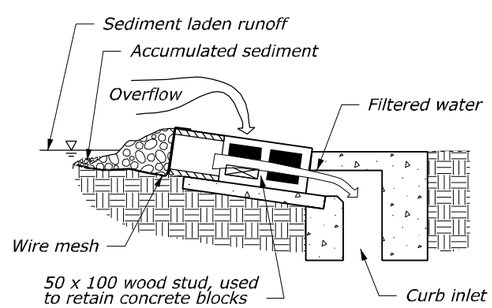

SECTION B-B

CURB INLET PROTECTION, BLOCK AND GRAVEL (TYPE D)

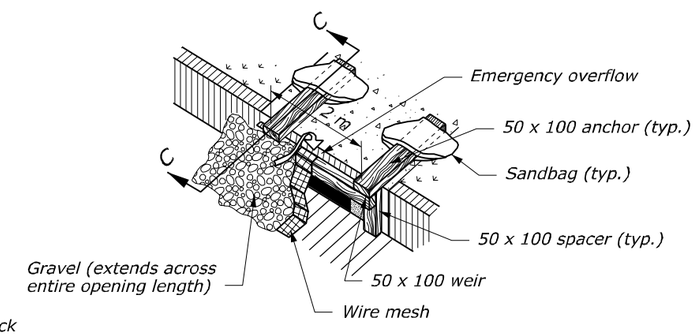

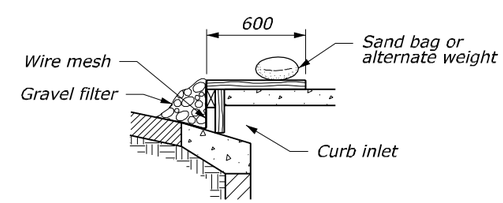

SECTION C-C

CURB INLET PROTECTION, WOODEN WEIR (TYPE E)

NO SCALE

U.S. DEPARTMENT OF TRANSPORTATION
FEDERAL HIGHWAY ADMINISTRATION
FEDERAL LANDS HIGHWAY

METRIC STANDARD

TEMPORARY INLET PROTECTION

OPTION 2

STANDARD APPROVED FOR USE 3/1996

REVISED: 6/2005

STANDARD M157-2

5/31/2008 11:34:35 AM M:\Projects\shl\502(3)\proj_dev\CADD\Std-Dev\8-STANDARD\stl5702.dgn

NPS NO.	REG	STATE	PROJECT	SHEET NO.
304 41,920	SE	TN	TEA-21 SHIL 502(3)	L-2

NOTE:

1. Dimensions without units are millimeters.

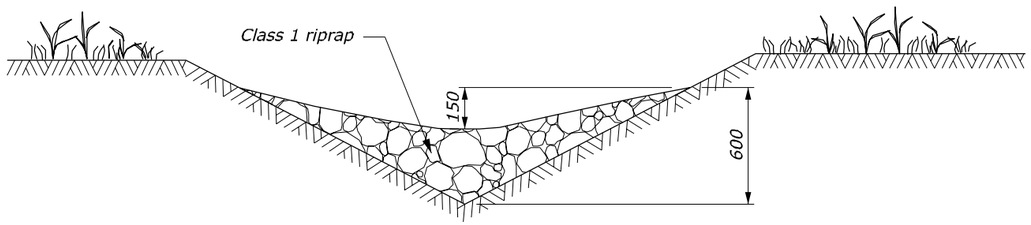

CROSS SECTION

V DITCH

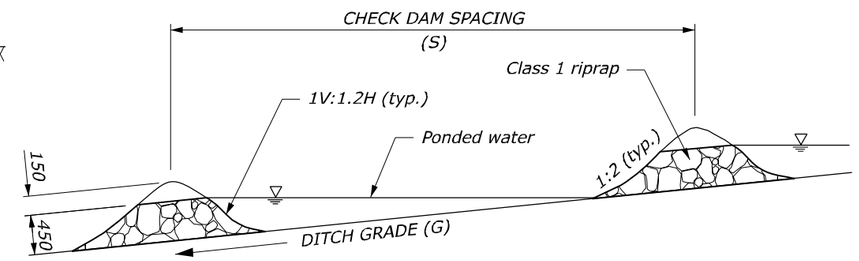

PROFILE VIEW

DITCH

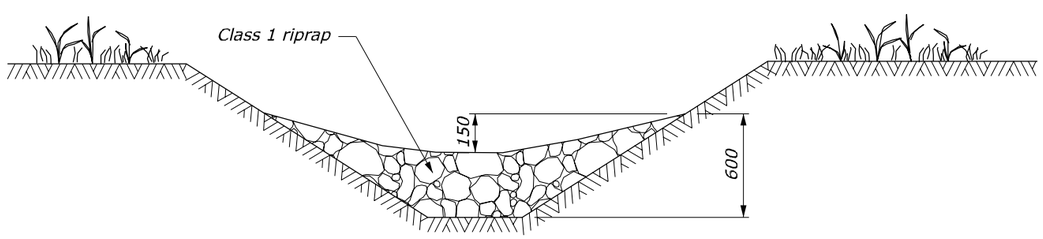

CROSS SECTION

TRAPEZOIDAL DITCH

DITCH GRADE * (G)	CHECK DAM SPACING S (m)
2%	23
3%	15
4%	12
5%	9
6%	7.5

* Do not use Check Dams below 2% or above 6% ditch grades

NO SCALE

U.S. DEPARTMENT OF TRANSPORTATION
FEDERAL HIGHWAY ADMINISTRATION
FEDERAL LANDS HIGHWAY

METRIC STANDARD

CHECK DAM

STANDARD APPROVED FOR USE 3/1996
REVISED: 6/2005 6/2007

STANDARD
M157-6

5/31/2008 11:32:26 AM M:\Projects\shl\502(3)\proj_dev\CADD\Std-Def\V8-STANDARD\sf15706.dgn

NPS NO.	REG	STATE	PROJECT	SHEET NO.
304 41,920	SE	TN	TEA-21 SHIL 502(3)	L-3

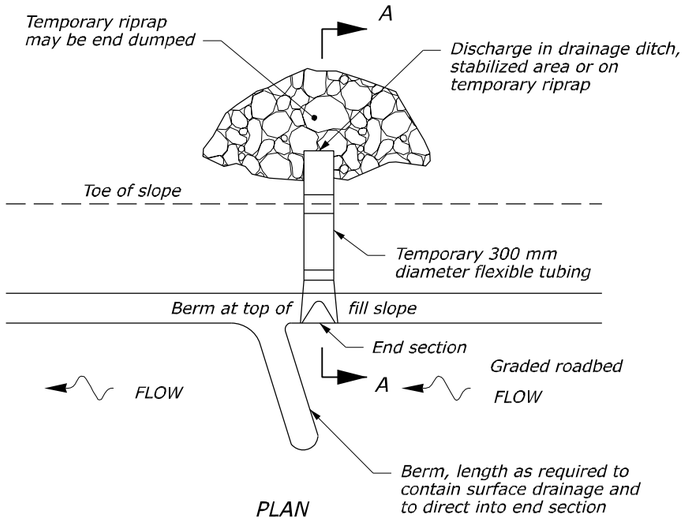

SLOPE DRAINS

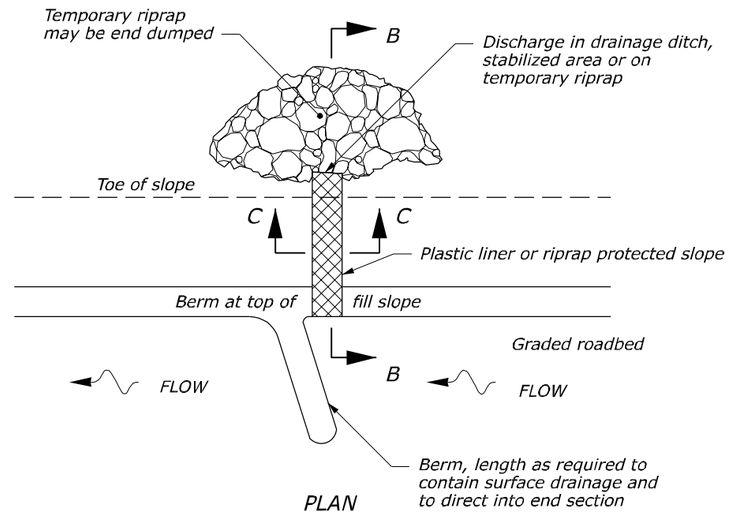

PLASTIC LINED WATERWAY

NOTE:

1. Use temporary slope drains (berms, drains, and riprap) as the embankment is constructed. Use spacings as shown on the Erosion Control Plans or as designated by the CO. Place all slope drains at the end of each work shift. Use slope drains until the slopes are permanently stabilized.
2. Construct temporary berms at the top of all erodible cut slopes as shown on the Erosion Control Plans or as designated by the CO. Use check dams to reduce the runoff velocity when existing grades are steep.
3. Do not use transverse or longitudinal joints in plastic liner. Plastic liner is not required for rock embankments.
4. Use toe-of-fill slope berms to divert offsite runoff away from disturbed areas.
5. Seed and mulch all cut slope berms and toe-of-fill berms immediately after berm construction.
6. Use Class 2 temporary riprap.
7. Dimensions without units are millimeters.

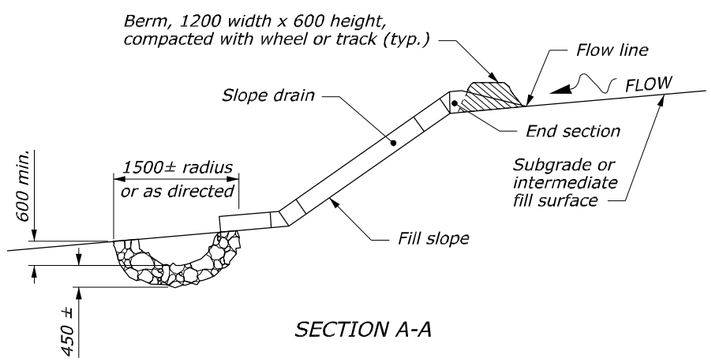

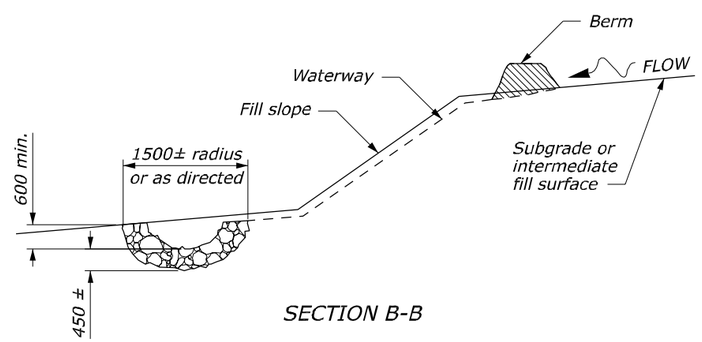

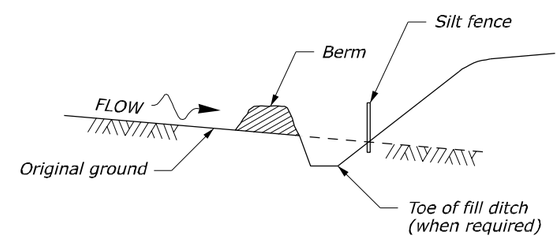

TOE-OF-FILL SLOPE BERM

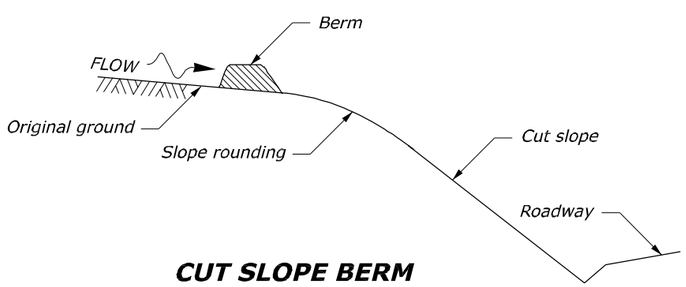

CUT SLOPE BERM

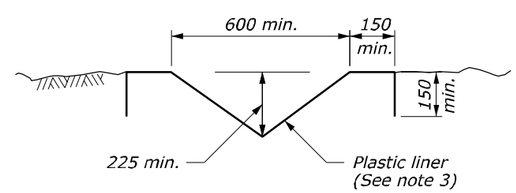

SECTION C-C

NO SCALE

U.S. DEPARTMENT OF TRANSPORTATION
FEDERAL HIGHWAY ADMINISTRATION
FEDERAL LANDS HIGHWAY

METRIC STANDARD

TEMPORARY EROSION CONTROL BERMS, SLOPE DRAINS, AND LINED WATERWAYS

STANDARD APPROVED FOR USE 3/1996
REVISED: 6/2005

STANDARD M157-7

5/31/2008 11:39:48 AM M:\Projects\shl\502(3)\proj_dev\CADD\Std-Def\V8-STANDARD\sf15707.dgn

NPS NO.	REG	STATE	PROJECT	SHEET NO.
304 / 41,920	SE	TN	TEA-21 SHIL 502(3)	L-4

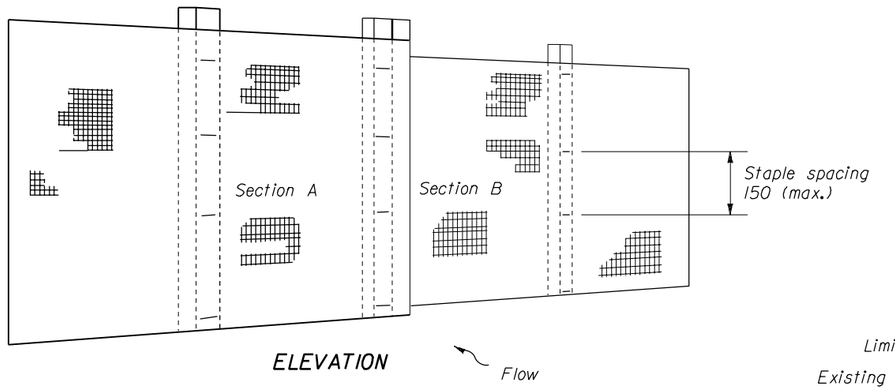

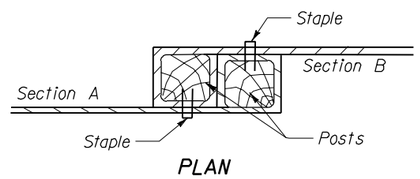

JOINING TWO ADJACENT SILT FENCE SECTIONS

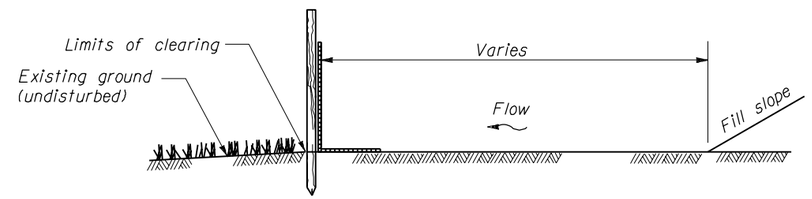

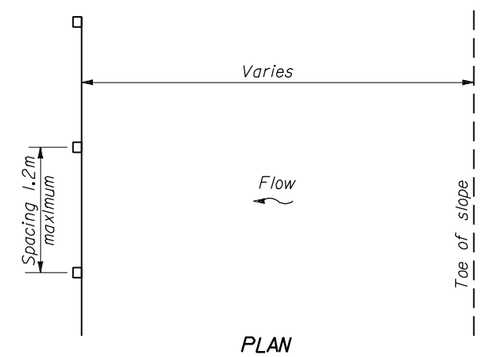

SILT FENCE INSTALLATION AT TOE OF FILL

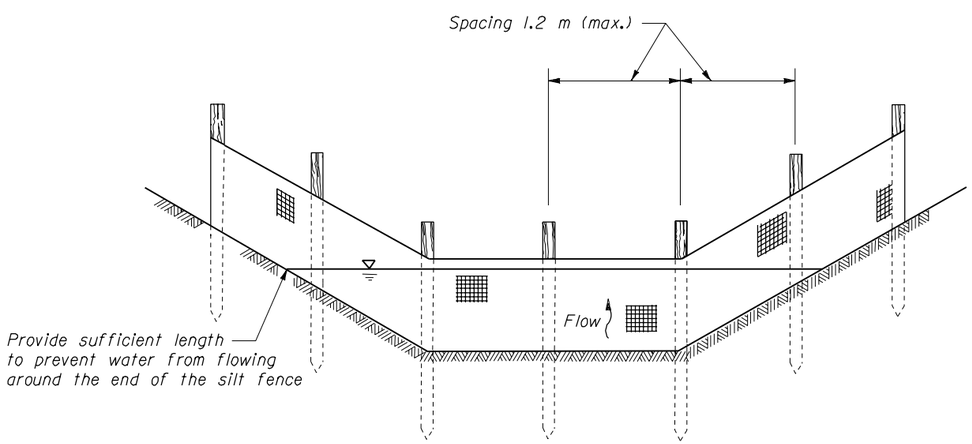

SILT FENCE INSTALLATION IN A DRAINAGE DITCH
(See note 2)

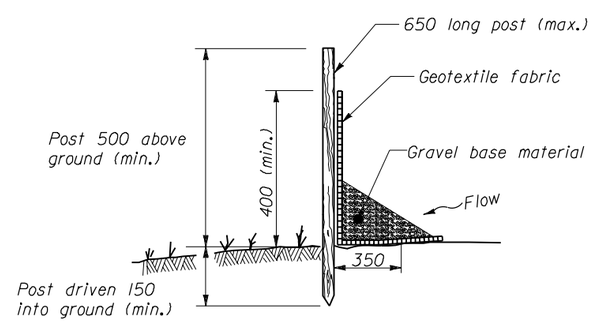

NOTES:

1. Unless otherwise shown, dimensions are in millimeters.
2. Use drainage ditch installation for low flow conditions only when specified on Erosion Control Plan.
3. Alternate pre-assembled silt fence options will be allowed as long as specified minimums are satisfied. Follow manufacture's information for installation procedures.

NO SCALE

U.S. DEPARTMENT OF TRANSPORTATION
FEDERAL HIGHWAY ADMINISTRATION
EASTERN FEDERAL LANDS HIGHWAY DIVISION

METRIC DETAIL

SILT FENCE
(NON-INTRUSIVE)

DETAIL APPROVED FOR USE xx/xx

REVISED:

DETAIL
EM157-A

5/31/2008 11:41:26 AM M:\Projects\shl\502(3)\proj_dev\CADD\Std-Det\details.dgn

NPS NO.	REG	STATE	PROJECT	SHEET NO.
304 / 41,920	SE	TN	TEA-21 SHIL 502(3)	L-5

Notes:

1. See Detail EMI57-A for silt fence installation details
2. Provide turn-ins where silt fence is shown running perpendicular to ground contours. Use small sections of silt fence to filter out sediment before run-off reaches a sag point or overtops the silt fence. Provide turn-ins and breaks as silt fence crosses temporary slope drains to keep excess water from building up against the silt fence.

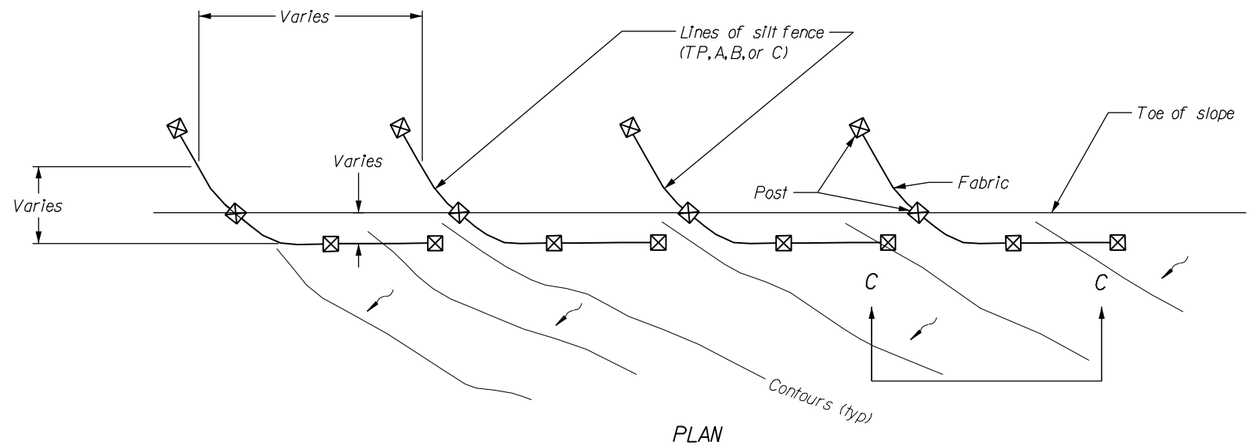

PLAN

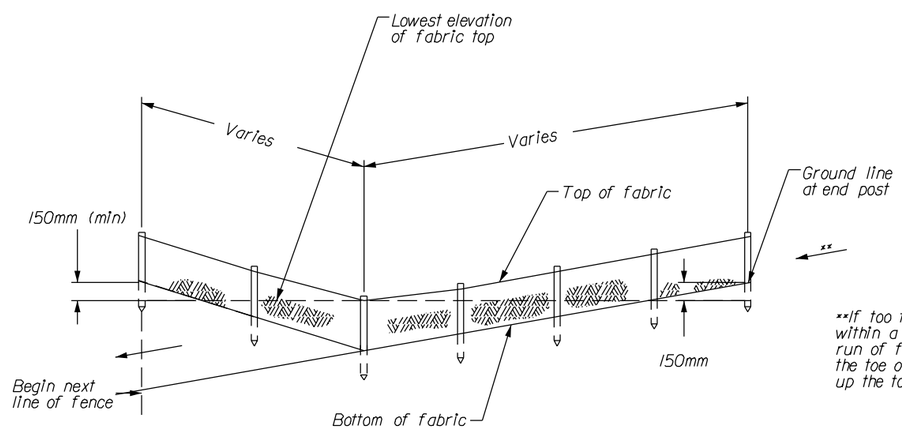

**If too flat to allow a 150mm minimum within a reasonable length, a continuous run of fence shall be installed beyond the toe of slope with spurs running up the toe of slope as shown.

SECTION C-C

NO SCALE

U.S. DEPARTMENT OF TRANSPORTATION
FEDERAL HIGHWAY ADMINISTRATION
EASTERN FEDERAL LANDS HIGHWAY DIVISION

METRIC DETAIL

SILT FENCE
(HOOKED)

DETAIL APPROVED FOR USE xx/xx

REVISED:

DETAIL
EMI57-B

5/31/2008 11:42:40 AM M:\Projects\shl\502(3)\proj_dev\CADD\Std-Det\details.dgn

NPS NO.	REG	STATE	PROJECT	SHEET NO.
304 41,920	SE	TC	TEA-21 SHIL 502(3)	L-6

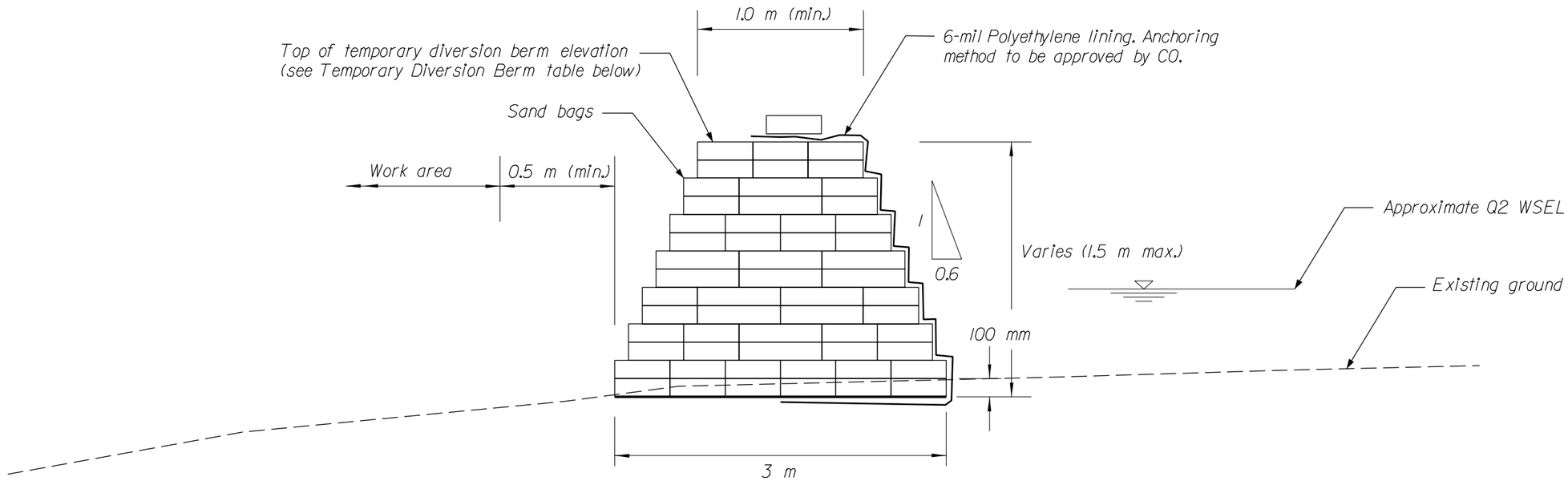

Temporary Diversion Berm

Temporary Diversion Berm Minimum Elevation - Q2 (ft.)		
West Berm	Upstream End of Berm=	125.0
	Downstream End of Berm=	125.0
East Berm	Upstream End of Berm=	125.4
	Downstream End of Berm=	124.9

Note:

Check berm for undermining, damage, or leakage. Repair or replace damaged plastic lining to ensure proper functioning of the temporary diversion berm installation.

NOT TO SCALE

U.S. DEPARTMENT OF TRANSPORTATION
FEDERAL HIGHWAY ADMINISTRATION
EASTERN FEDERAL LANDS HIGHWAY DIVISION

DETAIL

TEMPORARY DIVERSION BERM

DETAIL APPROVED FOR USE --/----

REVISED: --/--

DETAIL
EM157-C

5/31/2008 11:46:48 AM M:\Projects\shl\502(3)\proj_dev\CADD\Std-Det\detail5.dgn

NPS NO.	REG	STATE	PROJECT	SHEET NO.
304 41,920	SE	TE	TEA-21 SHIL 502(3)	L-7

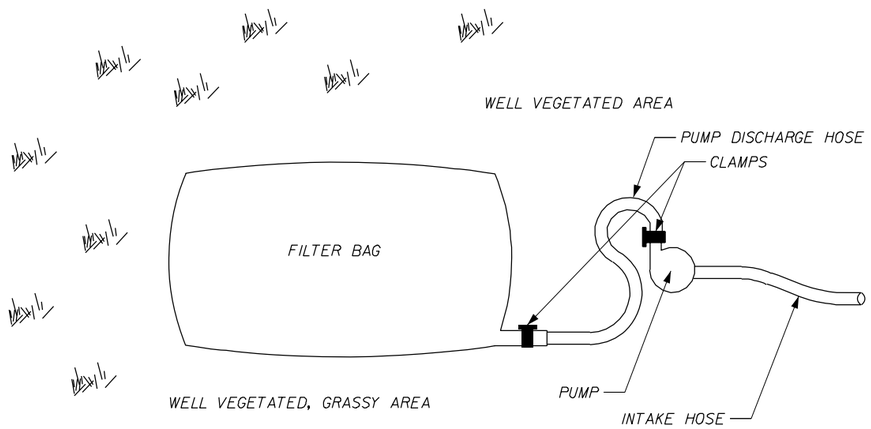

PLAN VIEW

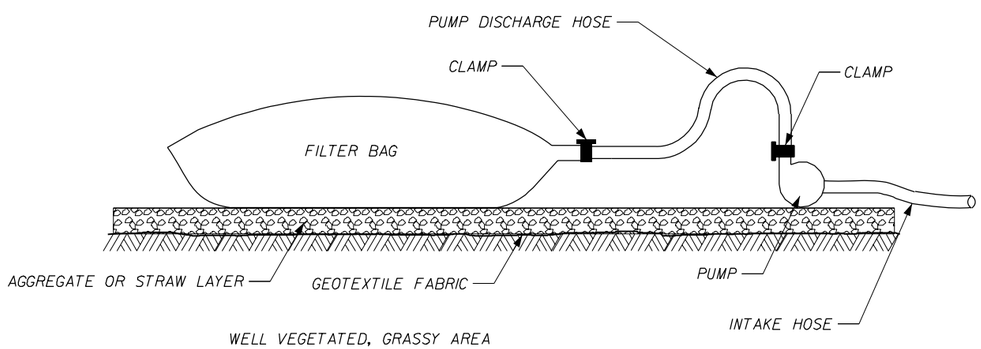

ELEVATION VIEW

WATER FILTER BAGS:

Provide filter bags that made from non-woven geotextile fabric with a minimum surface area of 20 square meter (225 square feet) per side.

Provide filter bags that have all structural seams sewn with a double stitch using a double needle machine with high strength thread. Seam strength must withstand 20 kg/cm (100 lb./in). using ASTM D-4884 test method.

Provide filter bags that have large enough sleeve to accommodate a 100 millimeter (4-inch) diameter pump discharge hose.

Seal sleeve around the pump discharge hose with a strap or similar device to prevent unfiltered water from escaping.

Place filter bag on a level or gently sloping (5% maximum) vegetated or stabilized area.

Control pump rate to prevent excessive pressure within the filter bag. As the bag becomes filled with sediment, reduce the pumping rate.

Dewater, remove, and dispose of filter bags, legally off Government property in accordance with section 203 and State or local ordinances, upon completion of pumping operations or after it has reached capacity, whichever occurs first. Restore the surface area beneath the dewatering bag to original condition upon removal of the device.

Provide the geotextile fabric to meet the following requirements with properties determined in accordance with the minimum procedures:

Weight	310 gram/meter (10 oz./yd).	ASTM D-3776
Grab tensile strength	100 kg. (210 lbs.)	ASTM D-4632
Puncture	70 kg. (150 lbs.)	ASTM D-4833
Flow rate	870 liter/min./m (70 gal./min./ft.)	ASTM D-4491
Permitivity (Sec-1)	1.3	ASTM D-4991
UV resistance	70%	ASTM D-4355
Apparent opening size (AOS)	0.425 mm - 0.18 mm (No.40 - No.80 U.S. Sieve)	ASTM D-4751

NO SCALE

U.S. DEPARTMENT OF TRANSPORTATION
FEDERAL HIGHWAY ADMINISTRATION
EASTERN FEDERAL LANDS HIGHWAY DIVISION

DETAIL

FILTER BAG

DETAIL APPROVED FOR USE --/----

REVISED: 6/99

DETAIL EMI57-D

5/31/2008 11:48:52 AM M:\Projects\shl\502(3)\proj_dev\CADD\Std-Det\details.dgn

NPS NO.	REG	STATE	PROJECT	SHEET NO.
304 / 41,920	SE	TN	TEA-21 SHIL 502(3)	L-8

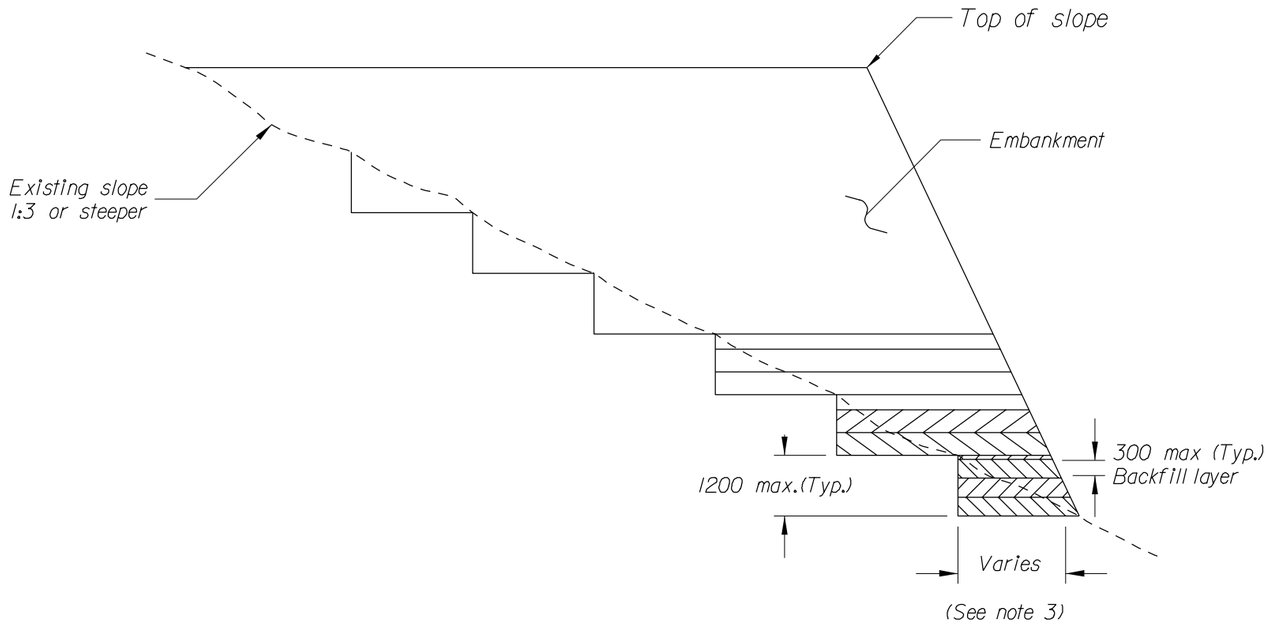

BENCHING DETAIL A

SLOPES STEEPER THAN 1:3

NOTES:

1. Unless otherwise shown, dimensions are in millimeters.
2. Where the embankment foundation is a hillside or another existing embankment, the foundation must be benched while the embankment is being constructed.
3. For slopes 1:3 or steeper, refer to Benching Detail A. Cut 2.4 m wide horizontal benches in the existing slope. Bench the slope as the embankment is placed and compacted in 0.3 m thick layers until a backfill height of 1.2 m is reached. Excavate and backfill in a similar manner until the top of slope is reached.
4. For slopes flatter than 1:3, refer to Benching Detail B. Cut into the existing slope until a maximum heigth of 0.3 m is reached, allowing the horizontal distance to vary. Place embankment material. Excavate and backfill in a similar manner until the top of slope is reached.
5. Benching is considered incidental to the item of roadway excavation and no additional measurement of quantity or payment will be made for benching.
6. Refer to Section 204 for benching specifications.

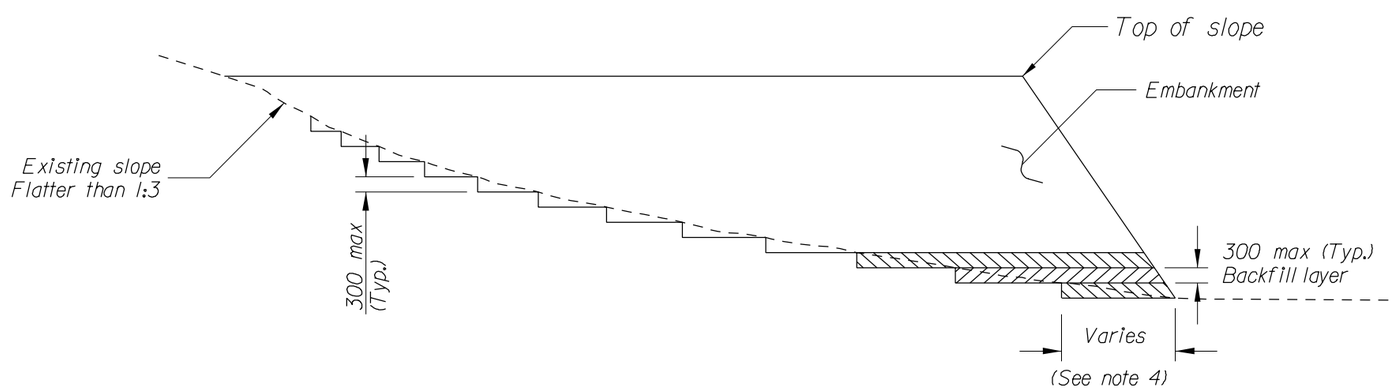

BENCHING DETAIL B

SLOPES FLATTER THAN 1:3

NO SCALE

U.S. DEPARTMENT OF TRANSPORTATION
FEDERAL HIGHWAY ADMINISTRATION
EASTERN FEDERAL LANDS HIGHWAY DIVISION

METRIC DETAIL

BENCHING DETAIL

DETAIL APPROVED FOR USE xx/xx

REVISED: 07/98

DETAIL EM204-2

5/31/2008 11:49:58 AM M:\Projects\sh\502(3)\proj_dev\CADD\Std-Det\details.dgn

em60901.dgn

NPS NO.	REG	STATE	PROJECT	SHEET NO.
304 / 41,920	SE	TN	TEA-21 SHIL 502(3)	L-9

NOTES:

1. Unsuitable or expansive material removed from other roadways may be used as embankment material for roadway obliteration.

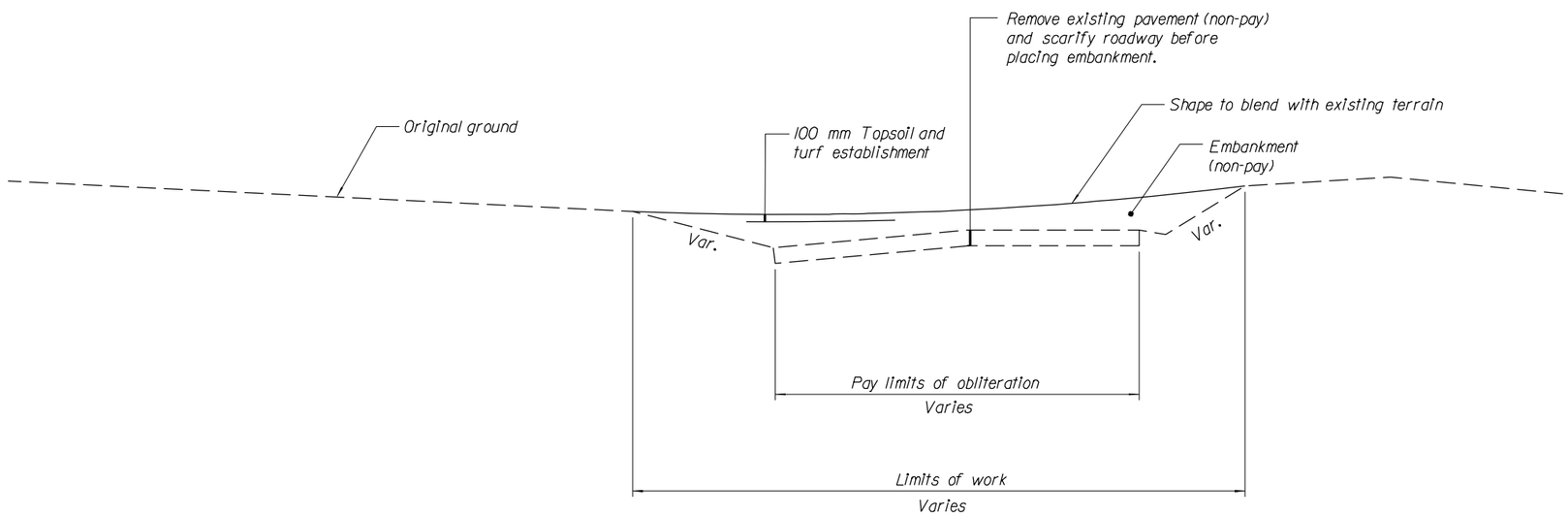

NO SCALE

U.S. DEPARTMENT OF TRANSPORTATION
FEDERAL HIGHWAY ADMINISTRATION
EASTERN FEDERAL LANDS HIGHWAY DIVISION

METRIC DETAIL

ROADWAY OBLITERATION
OPTION 3

DETAIL APPROVED FOR USE xx/xx

REVISED:

DETAIL
EM211-A

5/31/2008 11:51:03 AM M:\Projects\shl\502(3)\proj_dev\CADD\Std-Det\details.dgn

em60901.dgn

NPS NO.	REG	STATE	PROJECT	SHEET NO.
304 41,920	SE	TN	TEA-21 SHIL 502(3)	L-10

DEPTH (d)	
Riprap Class	Depth (d)-(mm)
1	300
2	450
3	600
4	760
5	1070
6	1220

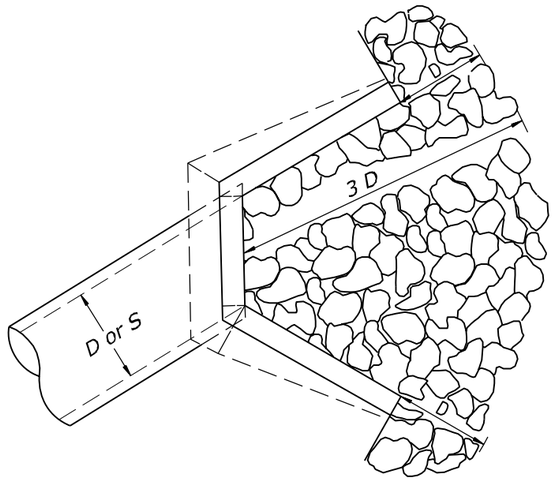

PLAN

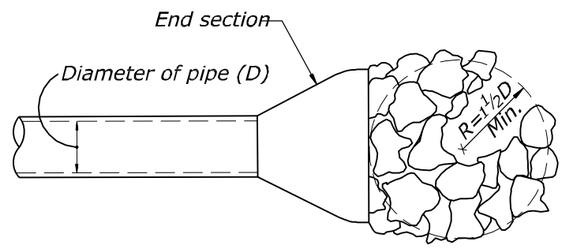

PLAN

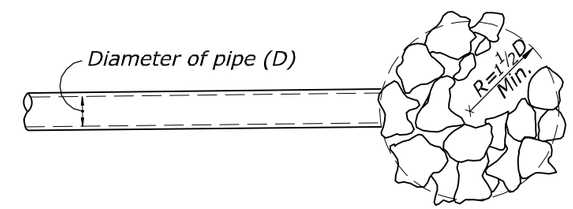

PLAN

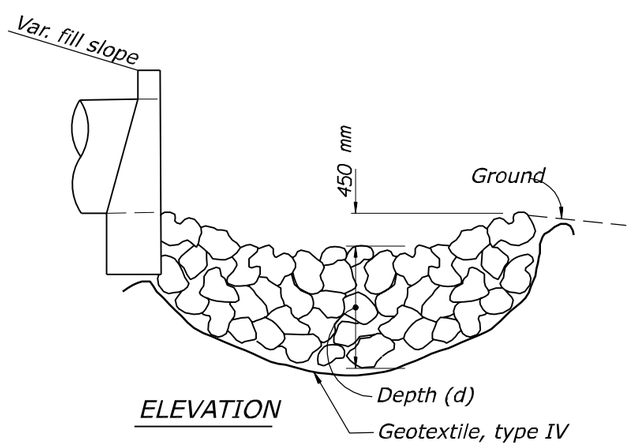

ELEVATION

CULVERT WITH HEADWALL

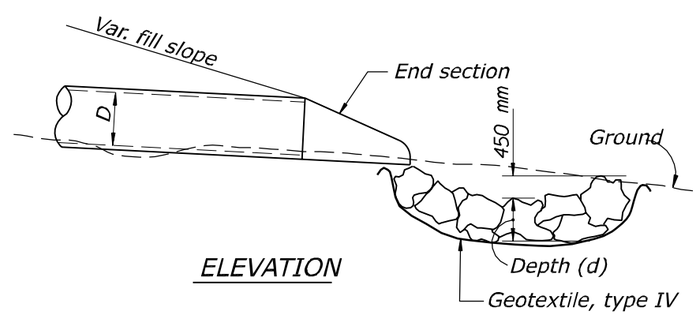

ELEVATION

CULVERT WITH END SECTION

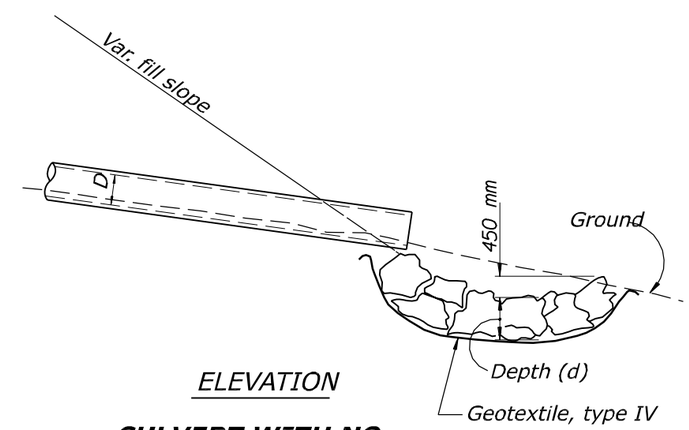

ELEVATION

CULVERT WITH NO END TREATMENT

NOTE:
For arch or elliptical pipes, use equivalent diameter for (D) dimension

NO SCALE

METRIC DETAIL

LOOSE RIPRAP AT CULVERT

DETAIL APPROVED FOR USE

REVISED: 05/07

DETAIL EM251-01

5/31/2008 11:54:58 AM M:\Projects\shil\502(3)\proj_dev\CADD\Std-Def\V8-STANDARD\st251\0l_detail.dgn

NPS NO.	REG	STATE	PROJECT	SHEET NO.
304 41,920	SE	TN	TEA-21 SHIL 502(3)	L-11

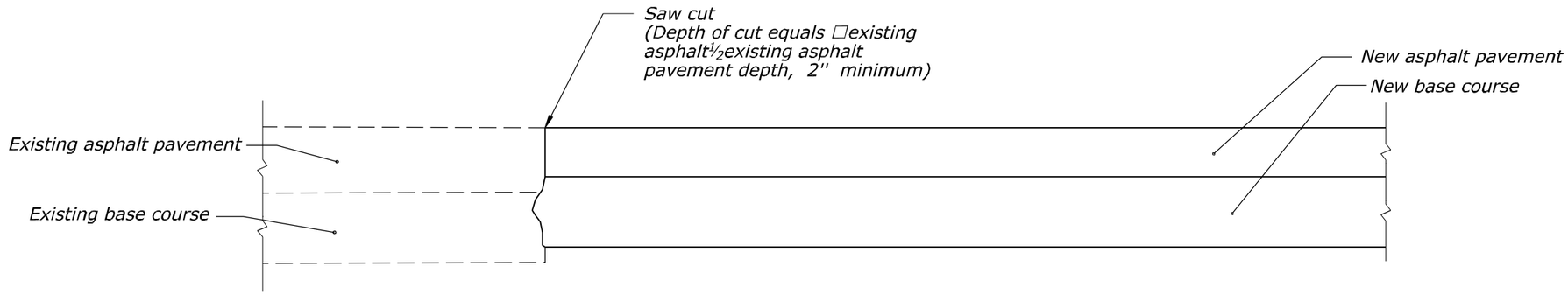

NEW PAVEMENT

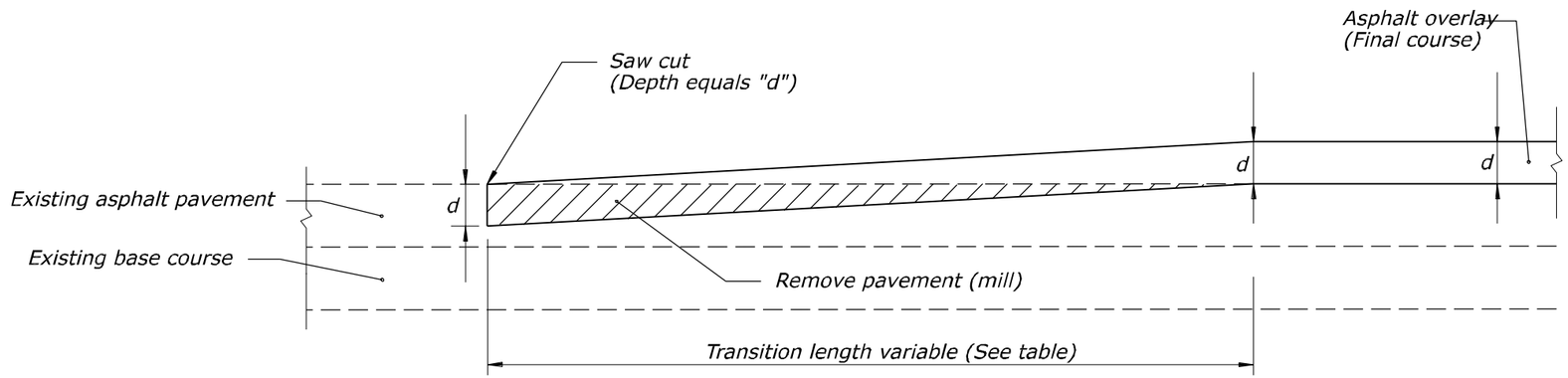

OVERLAY

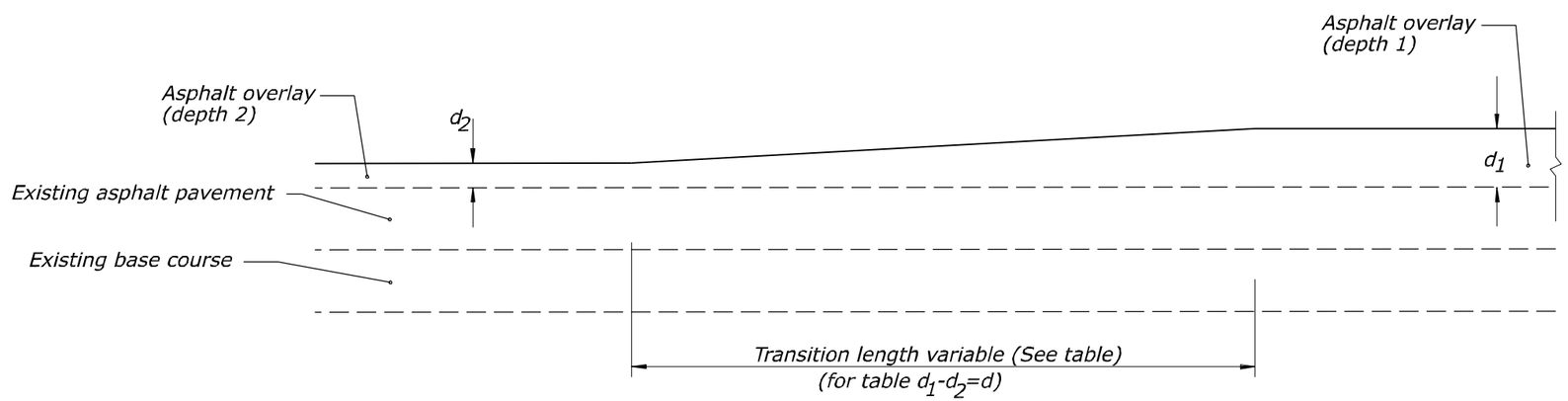

OVERLAY - DEPTH TRANSITIONS

d - mm	Transition Length - meter
25	6
40	9
50	12
65	15
75	18

NO SCALE

U.S. DEPARTMENT OF TRANSPORTATION
FEDERAL HIGHWAY ADMINISTRATION
EASTERN FEDERAL LANDS HIGHWAY DIVISION

METRIC DETAIL

PAVEMENT TRANSITIONS

DETAIL APPROVED FOR USE

REVISED: 07/07

DETAIL EM401-01

5/31/2008 12:03:00 PM M:\Projects\shil\502(3)\proj_dev\CADD\Std-Det\V8-STANDARD\st4010l_detail.dgn

NPS NO.	REG	STATE	PROJECT	SHEET NO.
304 / 41,920	SE	TN	TEA-21 SHIL 502(3)	L-12

Note:

1. *Unless otherwise shown, dimensions are in millimeters.*
2. *Match the pavement structure of the adjacent roadway in proposed pulloff.*
3. *See Pulloff Table for the pulloff types and their dimensions.*

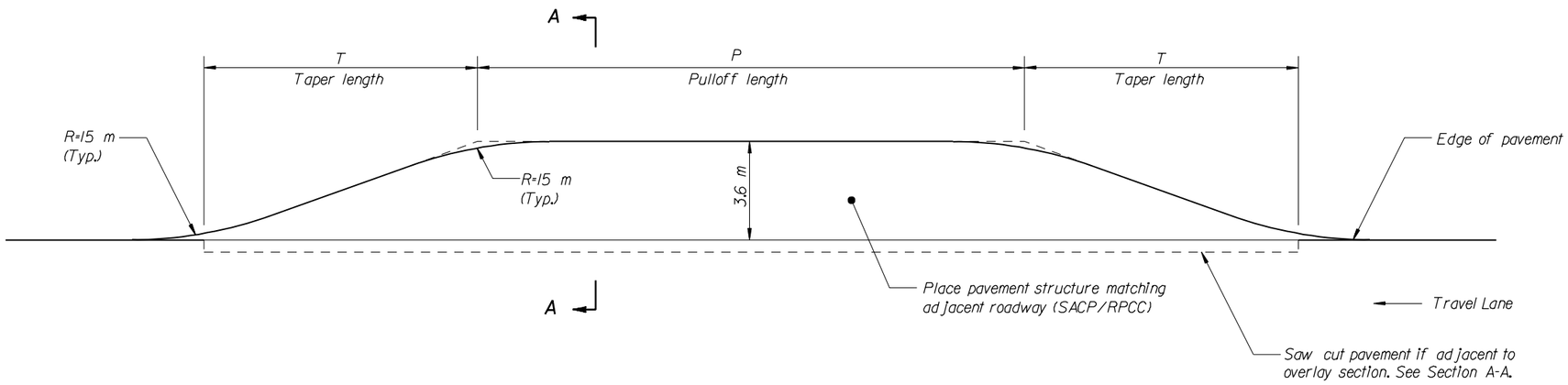

PAVED PULLOFF - PLAN VIEW

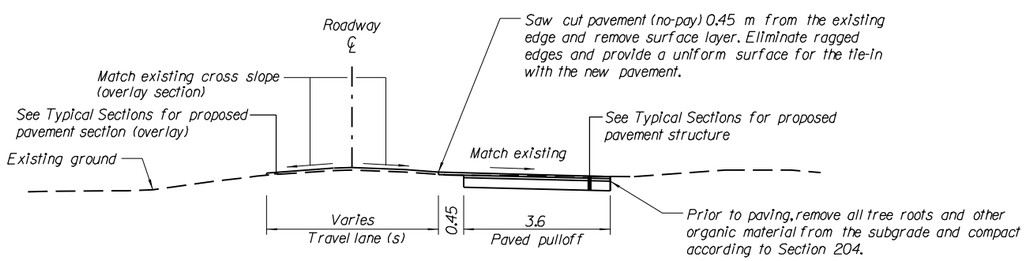

Section A-A

PULLOFF TABLE		
Pulloff Type	Taper Length T (m)	Pulloff Length P (m)
2-Car	10	15
3-Car	10	20
2-Bus	10	45
Combined	10	70

NO SCALE

U.S. DEPARTMENT OF TRANSPORTATION
FEDERAL HIGHWAY ADMINISTRATION
EASTERN FEDERAL LANDS HIGHWAY DIVISION

METRIC DETAIL

PAVED PULLOFFS

DETAIL APPROVED FOR USE xx/xx

REVISED:

DETAIL EM401-A

5/31/2008 12:05:25 PM M:\Projects\sh\1502(3)\proj_dev\CADD\Std-Dev\details.dgn

NPS NO.	REG	STATE	PROJECT	SHEET NO.
304 41,920	SE	TN	TEA-21 SHIL 502(3)	L-13

CONCRETE ROUND PIPE CULVERT

PIPE SIZE	FILL HEIGHT AND PIPE CLASS TABLE								
	EMBANKMENT					TRENCH			
DIAMETER	MINIMUM COVER	CLASS II	CLASS III	CLASS IV	CLASS V	CLASS II	CLASS III	CLASS IV	CLASS V
	MAXIMUM FILL HEIGHT ABOVE TOP OF PIPE IN METERS								
300	300	3.0	3.0	4.5	7.0	5.5	5.5	8.0	4.0
450	300	3.0	3.0	7.5	12.0	4.0	4.0	9.0	13.5
600	300	3.0	3.0	4.5	9.0	4.5	4.5	6.5	12.0
750	300	2.5	4.0	4.5	10.5	4.0	5.0	6.0	14.0
900	300	2.5	2.5	6.0	12.5	3.0	4.0	8.0	17.0
1200	300	3.5	4.0	8.0	13.5	4.5	5.0	9.0	15.0
1500	300	4.5	5.0	8.5	13.5	4.5	6.0	9.5	15.0
1800	300	4.0	5.0	9.0	12.5	4.5	6.0	10.5	15.0
2100	300	4.0	5.5	9.0		4.5	7.0	11.0	
2400	300	4.0	6.0			4.5	7.0		
2700	350	4.5	6.0			5.5	8.0		

LEGEND:

- Bedding material (uncompacted).
- Embankment material placed in layers not exceeding 150 compacted depth.
- Compacted backfill material placed in layers not exceeding 150 compacted depth meeting the following:
  - Maximum particle size = 75
  - Soil classification; A-1, A-2 or A-3
  - Or, lean concrete backfill in accordance with Section 614.
- Impermeable backfill material.

NOTE:

1. When directed, camber pipe culverts upwards from a chord through the inlet and outlet inverts an ordinate amount equal to 1% of the pipe length. Develop camber on a parabolic curve. If the midpoint elevation of the on the parabolic curve as designed exceeds the elevation of the inlet invert, reduce the amount of camber or increase the pipe culvert gradient.
2. Measure minimum cover from the top of the pipe culvert to the subgrade for flexible pavements, and to the top of the pavement for rigid pavements. Measure maximum fill height from the top of the pipe to the top of the pavement for both flexible and rigid pavements.
3. Pipe compaction limits shown are for pipe installation in an embankment. For pipe installation in a trench, the compaction limits shall be the walls of the trench.
4. Where unyielding or unstable material is encountered, install the pipe culvert according to the limits of pipe compaction shown on Standard M602-3.
5. Maximum fill heights for pipe culvert installations may be increased on approval of site-specific structural pipe designs meeting the criteria of AASHTO Standard Specifications for Highway bridges.
6. Dimensions without units are millimeters.

BEDDING DEPTH	
PIPE SIZE (H)	DEPTH
300 TO 1350	100
> 1350	150

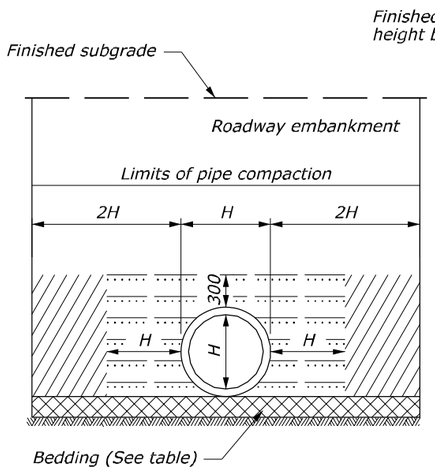

EMBANKMENT INSTALLATION

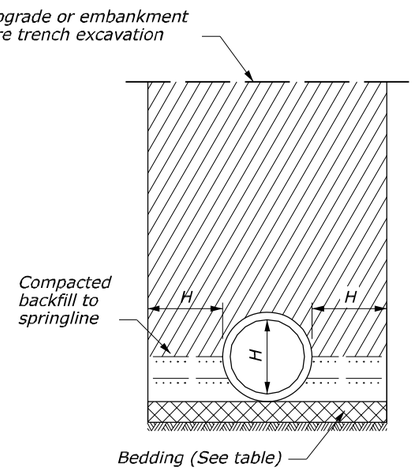

TRENCH INSTALLATION

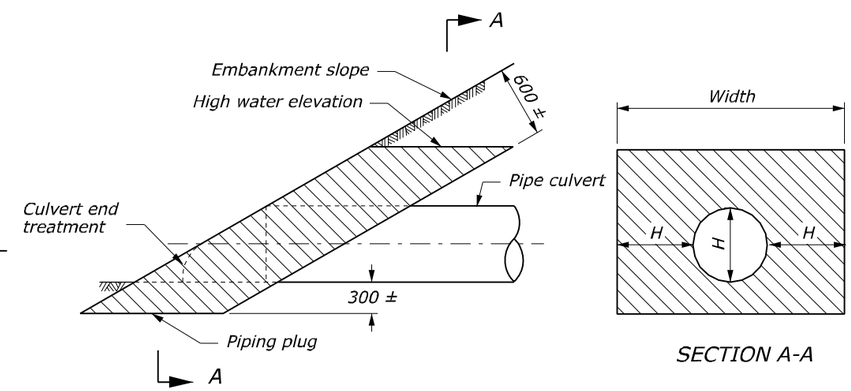

Construct a piping plug of impermeable backfill material at the pipe inlet where granular material is used for backfill. Width may be adjusted to tie into impervious material.

PIPING PLUG

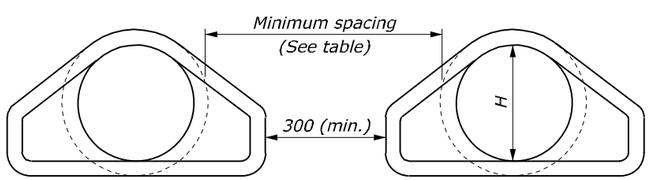

MULTIPLE ROUND PIPE INSTALLATION

MINIMUM SPACING		
DIAMETER	EMBANKMENT	TRENCH
300 - 900	380	2H
900 - 2400	0.5H	1830
OVER 2400	1220	1830

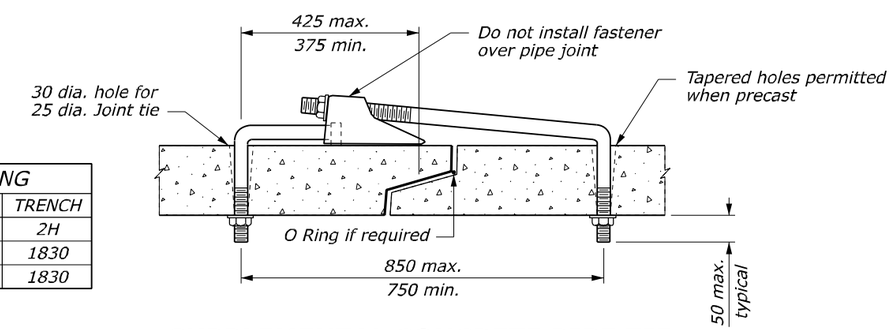

SUPPLEMENTAL CONCRETE PIPE TIE

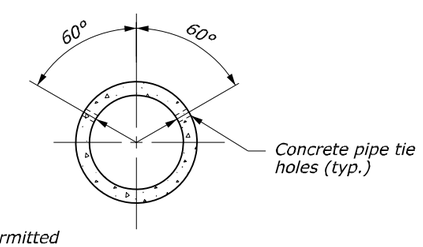

NO SCALE

U.S. DEPARTMENT OF TRANSPORTATION
FEDERAL HIGHWAY ADMINISTRATION
FEDERAL LANDS HIGHWAY

METRIC STANDARD

CONCRETE PIPE CULVERT INSTALLATION

STANDARD APPROVED FOR USE 3/1996
REVISED: 6/2005

STANDARD M602-7

5/31/2008 12:12:28 PM M:\Projects\shil\502(3)\proj_dev\CADD\Std-Def\V8-STANDARD\sf60207.dgn

NPS NO.	REG	STATE	PROJECT	SHEET NO.
304 41,920	SE	TN	TEA-21 SHIL 502(3)	L-14

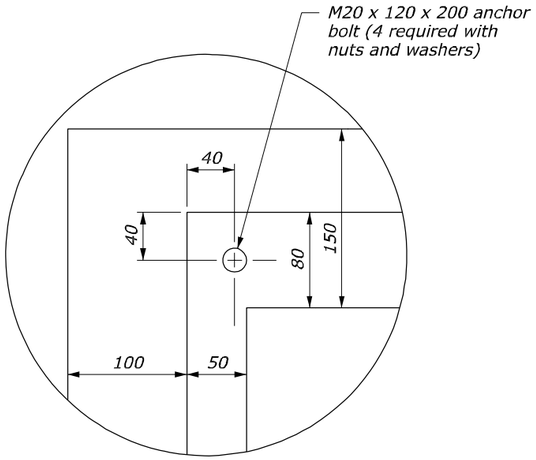

DETAIL A

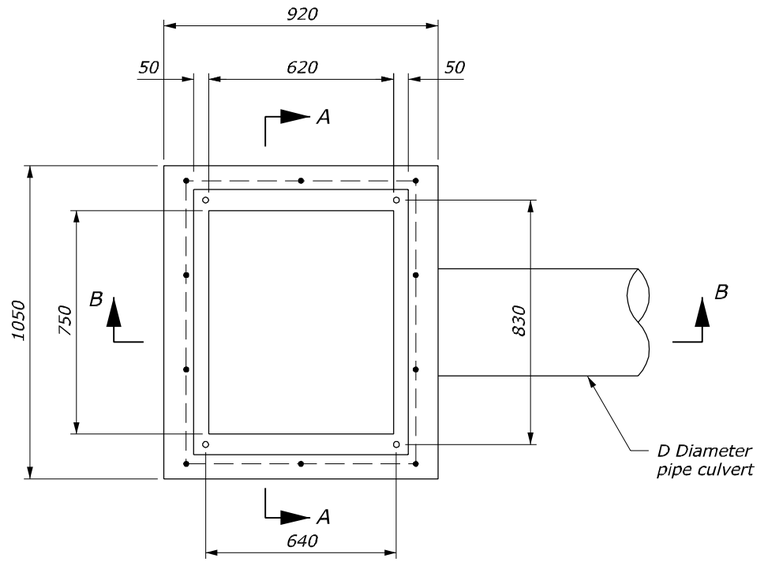

PLAN

NOTE:

1. All reinforcing bars are #16 placed a minimum 40 mm clear from face of concrete, In floors, place bars on 150 mm centers each way. In walls, place horizontal bars in 150 mm centers and vertical bars on 300 mm centers.
2. Curb shape shown for illustration only. Actual curb shape and dimensions are shown in the plans.
3. See Standard M604-6 for Frame and Grate Details.
4. If guardrail post location results in guardrail penetrating the culvert, eliminate the post and place additional nested W-beam rail sections per Standard M617-24.
5. Dimensions without units are millimeters.

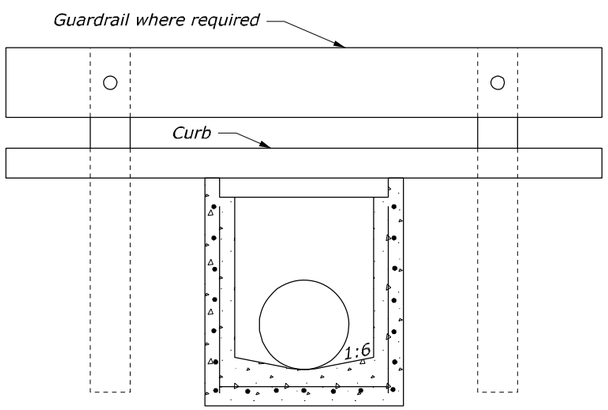

SECTION A-A

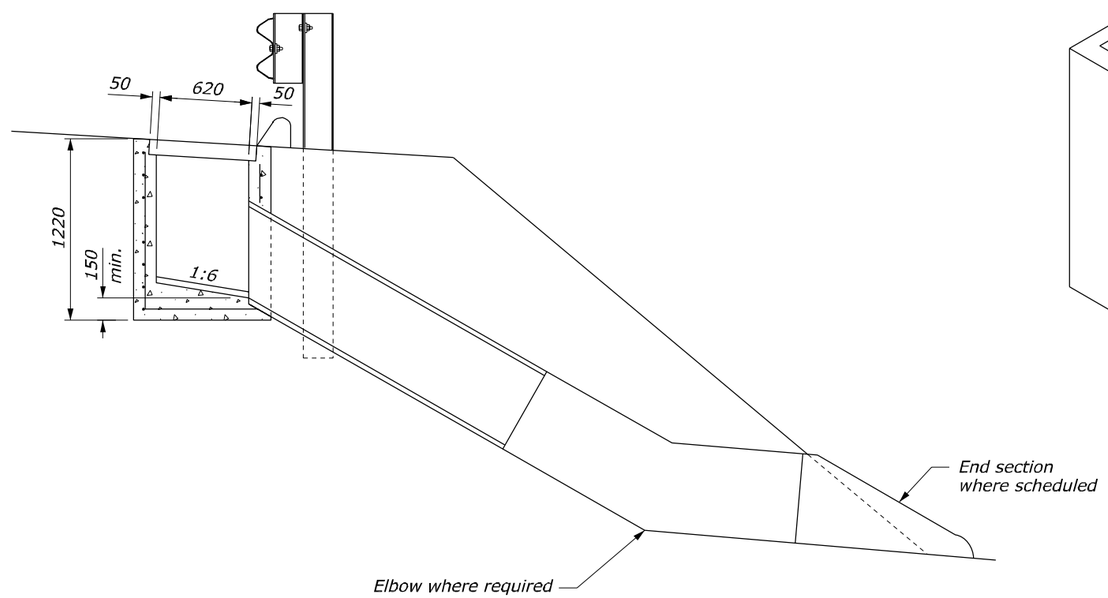

SECTION B-B

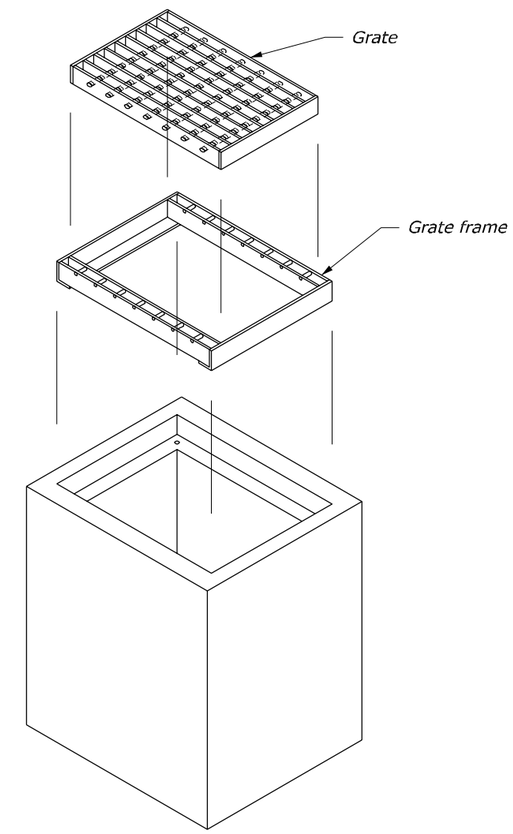

ISOMETRIC VIEW

NO SCALE

U.S. DEPARTMENT OF TRANSPORTATION
FEDERAL HIGHWAY ADMINISTRATION
FEDERAL LANDS HIGHWAY

METRIC STANDARD

INLET, TYPE 5A

OPTION 1

STANDARD APPROVED FOR USE 3/1996
REVISED: 5/1997 6/2005

STANDARD
M604-5

5/31/2008 12:18:29 PM M:\Projects\shil\502(3)\proj_dev\CADD\Std-Def\V8-STANDARD\sf60405.dgn

NPS NO.	REG	STATE	PROJECT	SHEET NO.
304 41,920	SE	TN	TEA-21 SHIL 502(3)	L-15

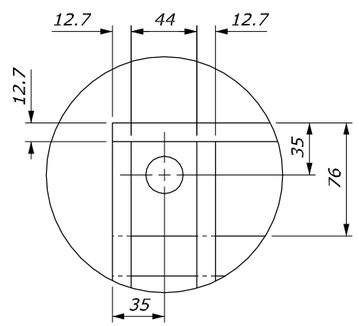

DETAIL B

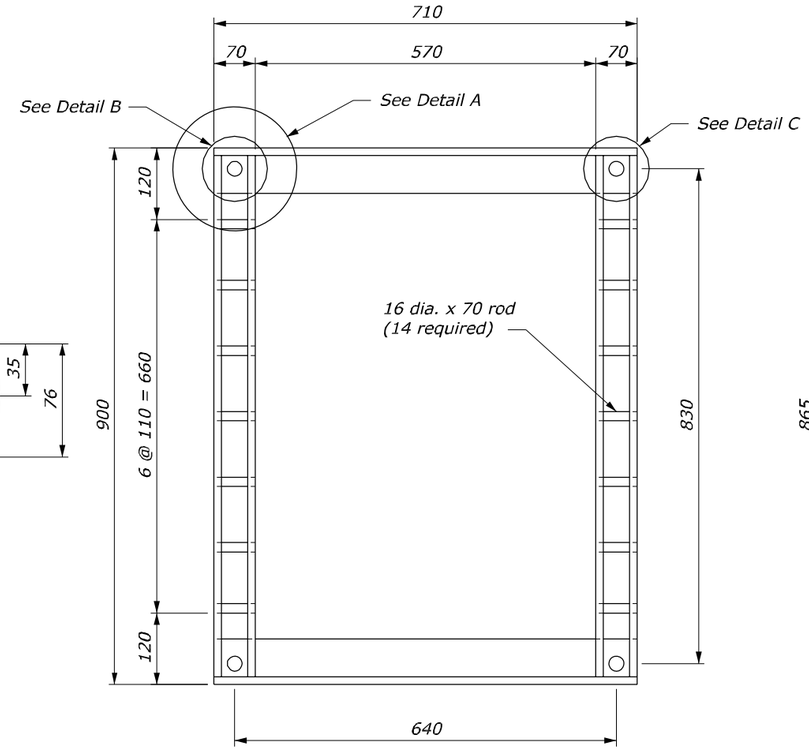

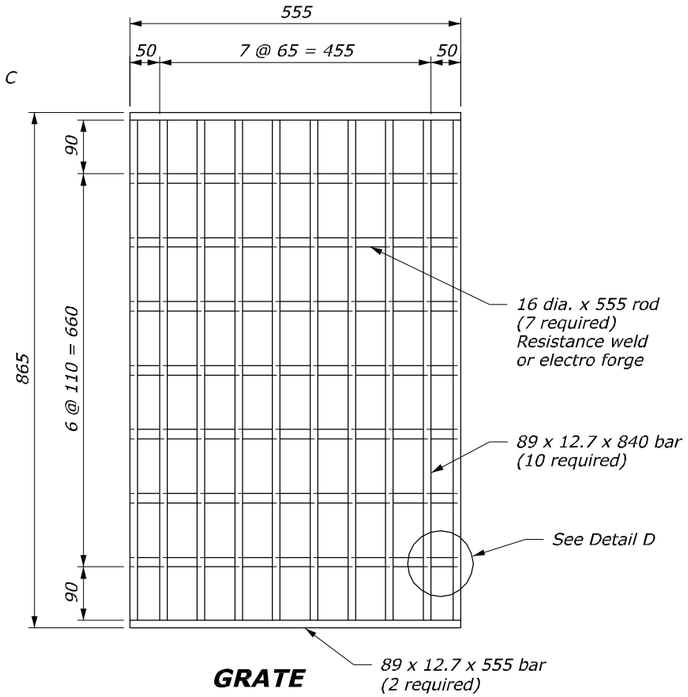

GRATE

GRATE FRAME

NOTE:

1. Hot dip galvanize all metal parts for frame and grate after fabrication.
2. Fabricate frame and grate from structural steel.
3. Furnish M20 x 120 x 200 mm anchor bolts with nuts to attach frame to inlet.
4. Cut holes in 89 x 12.7 mm bar as required to place 16 mm diameter rods.
5. Spot weld 16 mm diameter rods for frame and grate to 89 x 12.7 mm bars.
6. Furnish hardware in the metric sizes shown. Equivalent US Customary sizes may be used when metric sizes are not available.
7. Dimensions without units are millmeters.

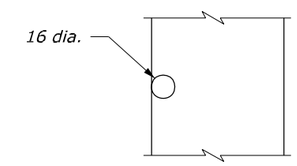

SECTION A-A

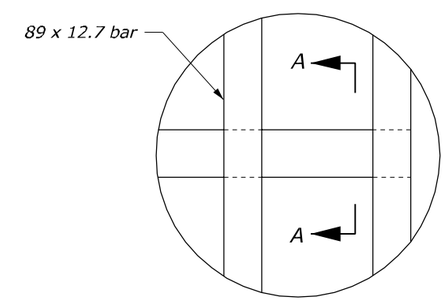

DETAIL D

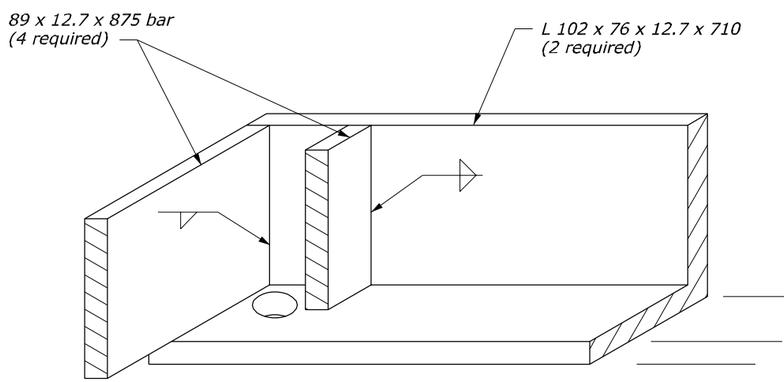

DETAIL A
(OBLIQUE)

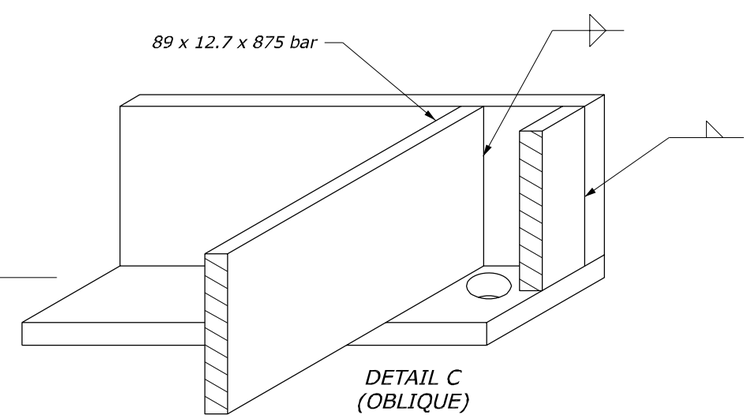

DETAIL C
(OBLIQUE)

NO SCALE

U.S. DEPARTMENT OF TRANSPORTATION
FEDERAL HIGHWAY ADMINISTRATION
FEDERAL LANDS HIGHWAY

METRIC STANDARD

FRAME AND GRATE
TYPE 5A
OPTION 1

STANDARD APPROVED FOR USE 3/1996
REVISED: 6/2005

STANDARD
M604-6

5/31/2008 12:21:28 PM M:\Projects\shil\502(3)\proj_dev\CADD\Std-Def\V8-STANDARD\sf60406.dgn

NPS NO.	REG	STATE	PROJECT	SHEET NO.
304 / 41,920	SE	TN	TEA-21 SHIL 502(3)	L-16

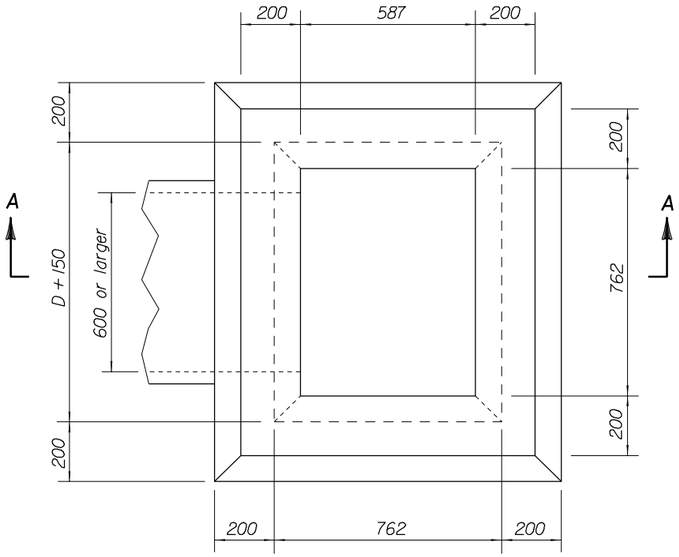

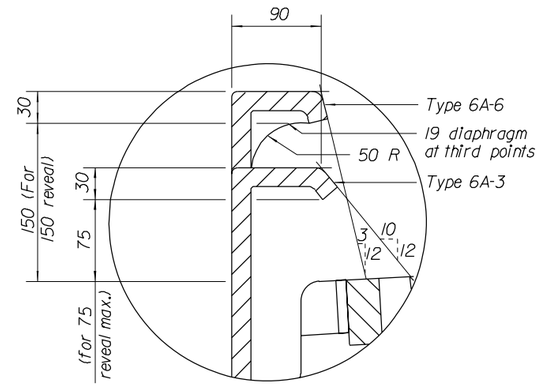

DETAIL C

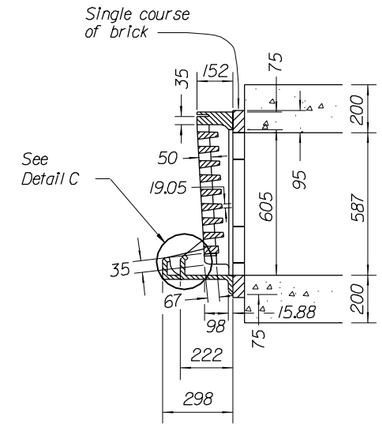

NOTES:

1. Unless otherwise shown, dimensions are in millimeters.
2. At the option of the Contractor walls less than 1200 mm may be of either concrete block or concrete as shown.
3. Construct Type A Inlets for pipes 600 mm and larger "For Ample Headroom", unless otherwise directed by the CO.
4. Construct inlets parallel to the roadway centerline and grade. For pipes on skew, adapt inlets as directed by the CO.
5. Construct ladder rungs of 20 mm round or square steel or wrought iron where depth exceeds 1200 mm.
6. For frames and gratings minor variations in design and dimensions are permitted to allow manufacturers standards.
7. Prime and paint metal frame and grate with two coats of flat black paint.

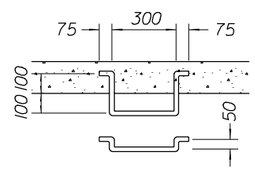

LADDER RUNG

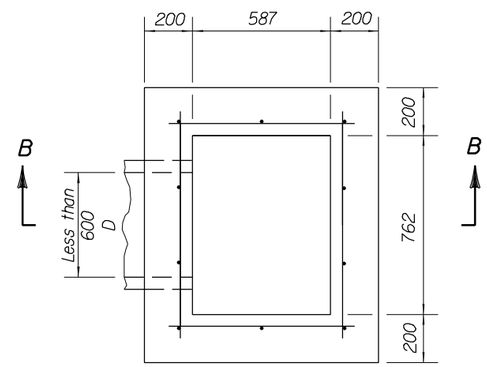

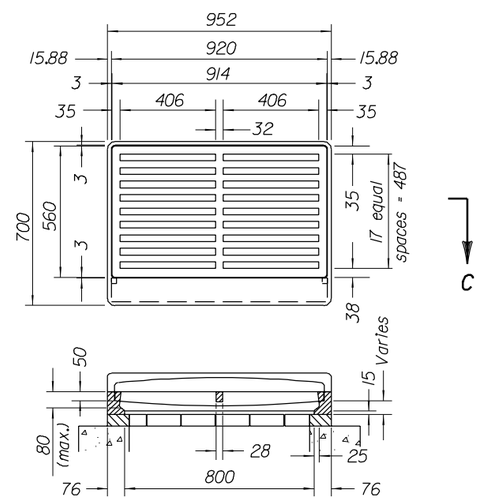

SECTION C-C

METAL FRAMES AND GRATINGS
TYPE 6A

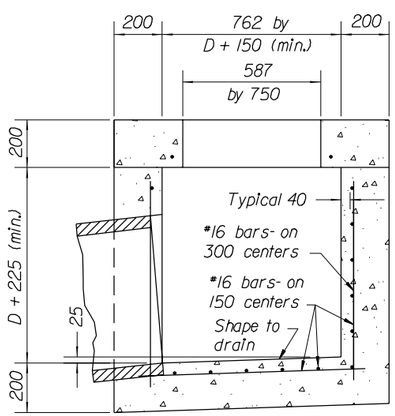

Limited Headroom

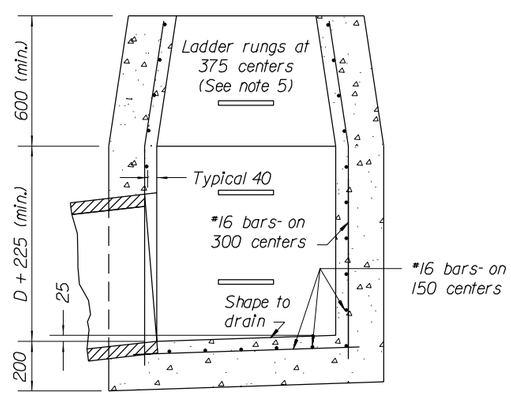

Ample Headroom

SECTION A-A

TYPE 6A INLET
(for 600 mm or larger pipes)

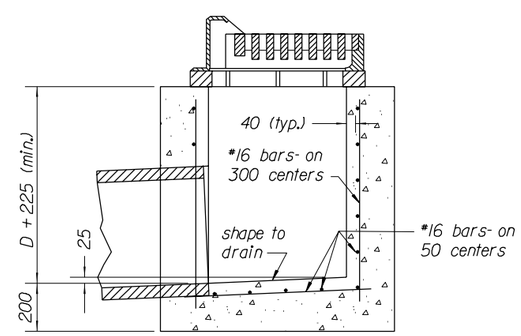

SECTION B-B

TYPE 6A INLET
(for pipes smaller than 600 mm)

NO SCALE

U.S. DEPARTMENT OF TRANSPORTATION
FEDERAL HIGHWAY ADMINISTRATION
FEDERAL LANDS HIGHWAY OFFICE

METRIC DETAIL

INLET, TYPE 6A
OPTION 2

STANDARD APPROVED FOR USE xx/xx

REVISED: 9/95 7/98

DETAIL
EM604-05

5/31/2008 12:23:10 PM M:\Projects\shl\50213\proj_dev\CADD\Std-Det\details.dgn

NPS NO.	REG	STATE	PROJECT	SHEET NO.
304 41,920	SE	TN	TEA-21 SHIL 502(3)	L-17

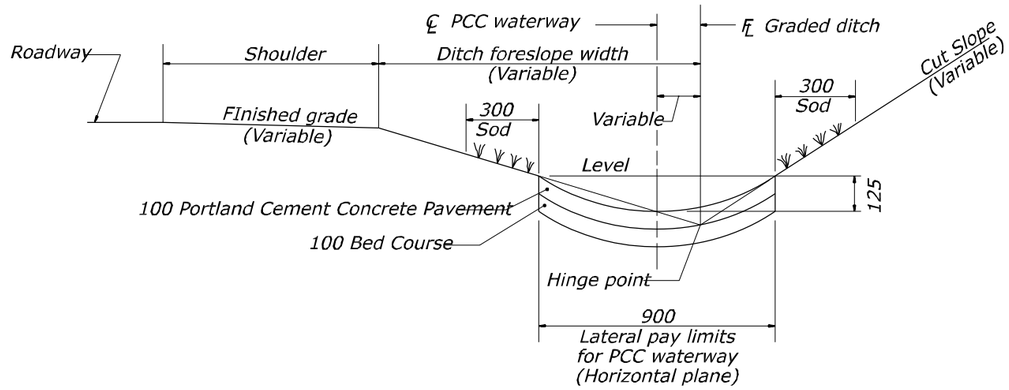

PORTLAND CEMENT CONCRETE WATERWAY

NOTES:

1. *Unless otherwise shown, dimensions are in millimeters.*
2. *The approximate shape of the Portland Cement Concrete waterway is an arc with a radius of 880 mm.*
3. *At inlets and other special locations, widen and shape paved waterway to drain.*
4. *Construct Portland Cement Concrete waterway in uniform sections 6 meters in length, except closure sections are not less than 1.5 meters in length. Place expansion joints, with curtain walls at 30 meter intervals.*
5. *At the outlet end of each Portland Cement Concrete waterway, construct a curtain wall on the downstream end of the last section of waterway.*

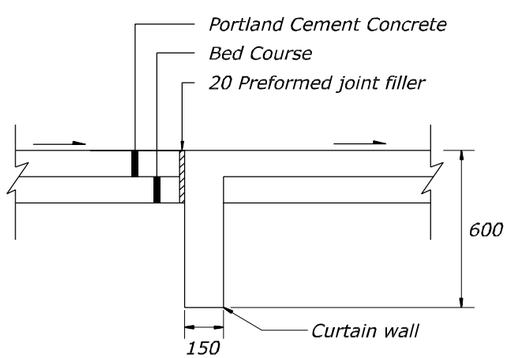

SECTION A-A

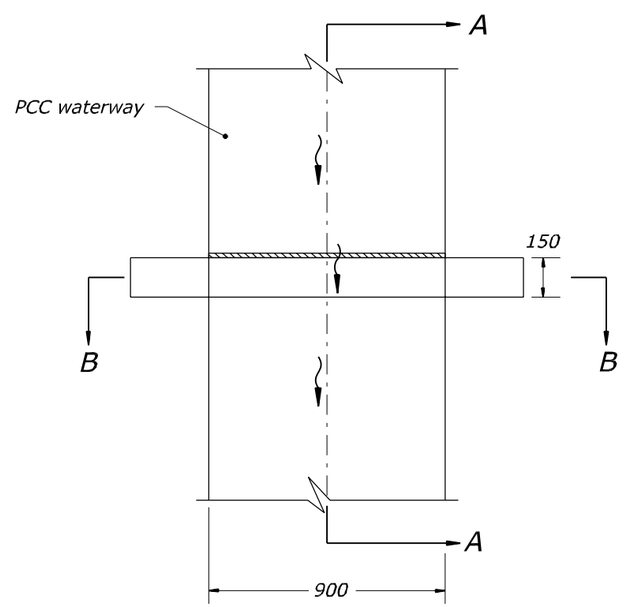

PLAN

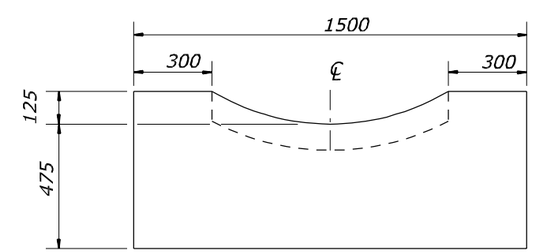

SECTION B-B

EXPANSION JOINT FOR PORTLAND CEMENT CONCRETE WATERWAY

NO SCALE

U.S. DEPARTMENT OF TRANSPORTATION
FEDERAL HIGHWAY ADMINISTRATION
EASTERN FEDERAL LANDS HIGHWAY DIVISION

METRIC DETAIL

PORTLAND CEMENT CONCRETE WATERWAY TYPE 4

DETAIL APPROVED FOR USE

REVISED: 01/08

DETAIL EM608-01

6/9/2008 4:07:40 PM M:\Projects\shl\502(3)\proj_dev\CADD\Std-Dev\8-STANDARD\sf6080l_detail.dgn

NPS NO.	REG	STATE	PROJECT	SHEET NO.
304 41,920	SE	TN	TEA-21 SHIL 502(3)	L-18

NOTES:

1. *Unless otherwise shown, dimensions are in millimeters.*
2. *The approximate shape of the paved waterway is an arc with a radius of 880 mm.*
3. *At inlets and other special locations, widen and shape paved waterway to drain.*

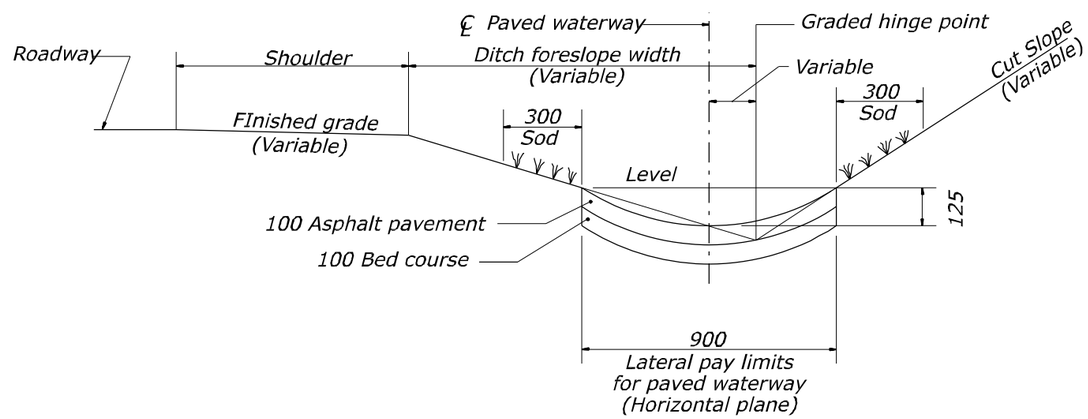

PAVED WATERWAY

NO SCALE

U.S. DEPARTMENT OF TRANSPORTATION
FEDERAL HIGHWAY ADMINISTRATION
EASTERN FEDERAL LANDS HIGHWAY DIVISION

METRIC DETAIL

ASPHALT PAVED WATERWAY

DETAIL APPROVED FOR USE

REVISED: 01/08

DETAIL
EM608-02

6/9/2008 4:06:03 PM M:\Projects\shl\502(3)\proj_dev\CADD\Std-Det\V8-STANDARD\st60802_detail.dgn

NPS NO.	REG	STATE	PROJECT	SHEET NO.
304 / 41,920	SE	TN	TEA-21 SHIL 502(3)	L-19

NOTES:

1. Unless otherwise shown, dimensions are in millimeters.
2. Center wheel stops between, and perpendicular to, stall lines.
3. Variations in wheel stops will be allowed with the approval of the CO to meet manufacturer's standards.

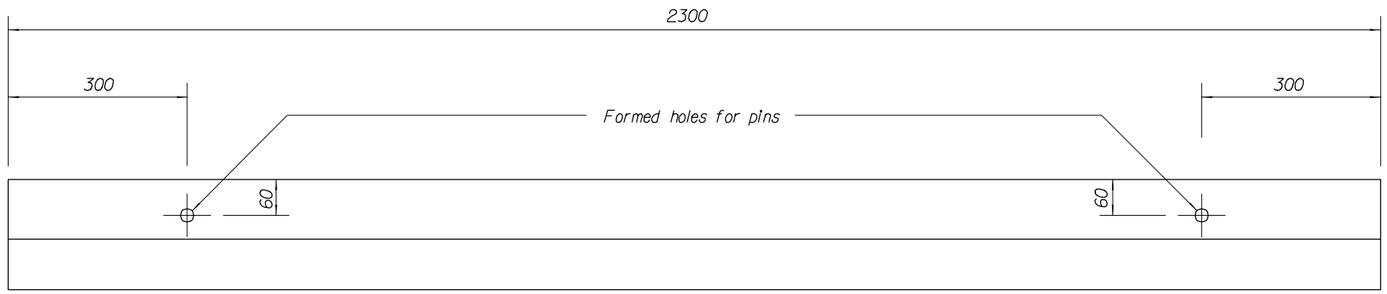

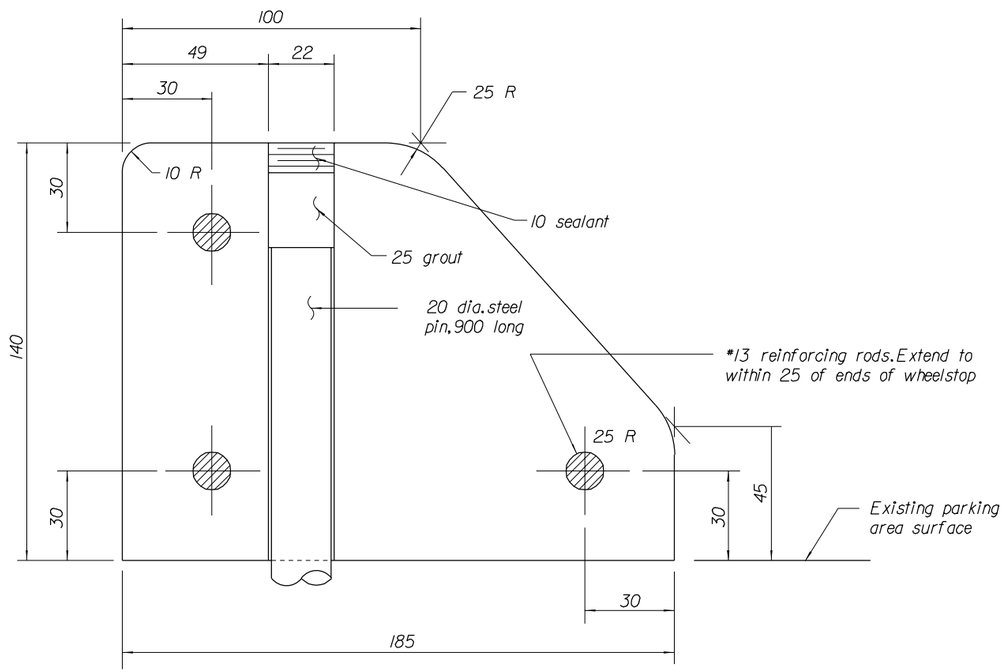

SECTION A-A

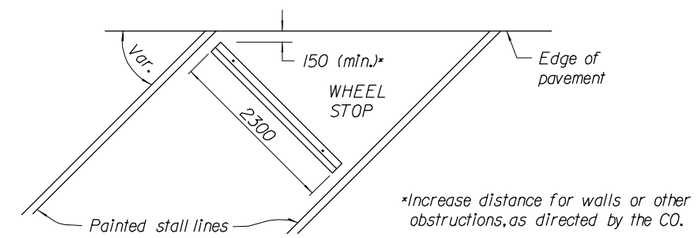

ANGULAR PARKING

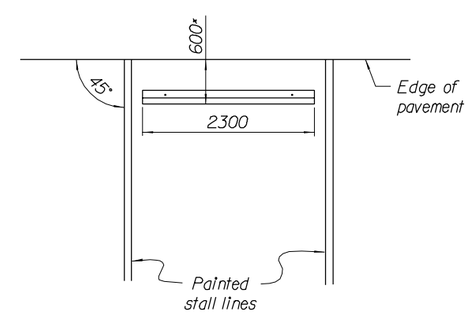

HEAD-ON PARKING

NO SCALE

U.S. DEPARTMENT OF TRANSPORTATION
FEDERAL HIGHWAY ADMINISTRATION
EASTERN FEDERAL LANDS HIGHWAY DIVISION

METRIC DETAIL

CONCRETE WHEELSTOP

DETAIL APPROVED FOR USE xx/xx

REVISED: 2/00

DETAIL EM609-2

6/9/2008 4:09:52 PM M:\Projects\sth\502(3)\proj_dev\CADD\Std-Det\details.dgn

em60902.dgn

NPS NO.	REG	STATE	PROJECT	SHEET NO.
304 41,920	SE	TN	TEA-21 SHIL 502(3)	L-20

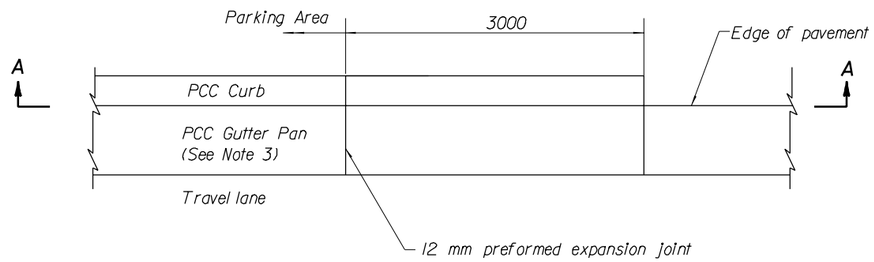

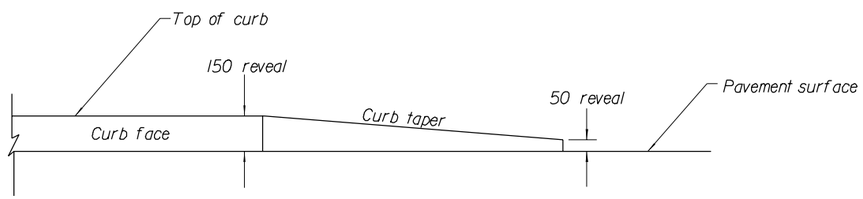

ELEVATION A-A

PORTLAND CEMENT CONCRETE CURB
TAPER DETAIL

NOTES:

1. Unless otherwise shown, dimensions are in millimeters.
2. Place 75 mm minimum aggregate bed course under all curb and gutter.
3. For PCC curb applications, eliminate gutter pan from taper detail.

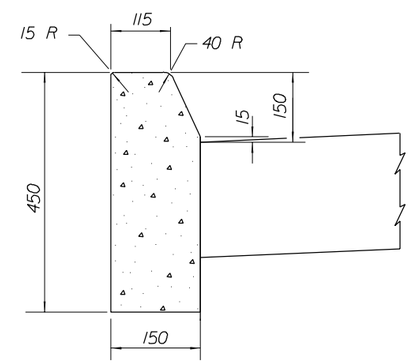

450 mm DEPTH (NON- MOUNTABLE)

PORTLAND CEMENT CONCRETE CURB

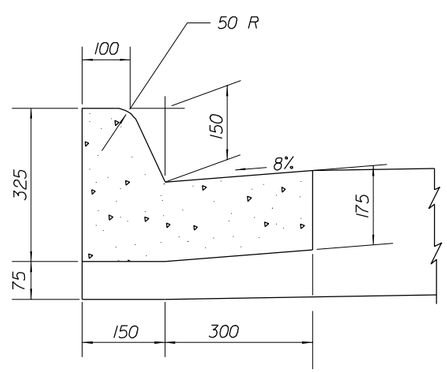

325 mm DEPTH
(NON- MOUNTABLE)

PORTLAND CEMENT CONCRETE CURB AND GUTTER

NO SCALE

U.S. DEPARTMENT OF TRANSPORTATION
FEDERAL HIGHWAY ADMINISTRATION
EASTERN FEDERAL LANDS HIGHWAY DIVISION

METRIC DETAIL

PORTLAND CEMENT CONCRETE
CURB AND GUTER TAPER SECTION
OPTIONS 2 AND 3

DETAIL APPROVED FOR USE --/----

REVISED: 07/98

DETAIL
EM609-A

6/9/2008 4:15:21 PM M:\Projects\sh\502(3)\proj_dev\CADD\Std-Dev\V7-STANDARD\EM609-Adgn

em60901.dgn

NPS NO.	REG	STATE	PROJECT	SHEET NO.
304 / 41,920	SE	TN	TEA-21 SHIL 502(3)	L-21

NOTES:

1. Unless otherwise shown, dimensions are in millimeters.
2. Place 20 mm transverse expansion joints at intervals of not more than 18 meters to match adjacent curb expansion joints.
3. Place dummy joints in sidewalk at locations matching adjacent curb joints.
4. See Section 615 for more details.

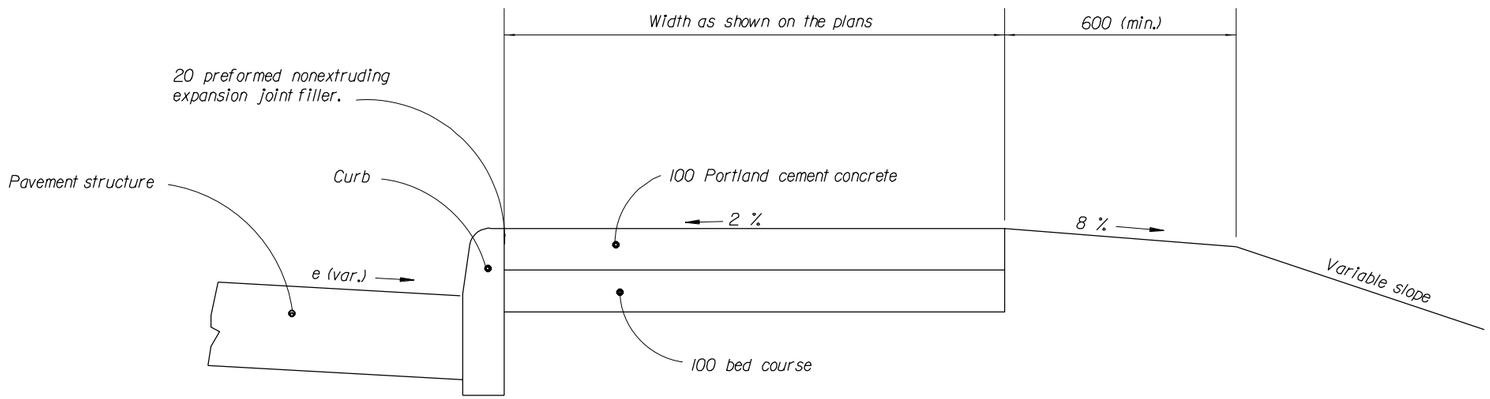

SIDEWALK WITH CURB

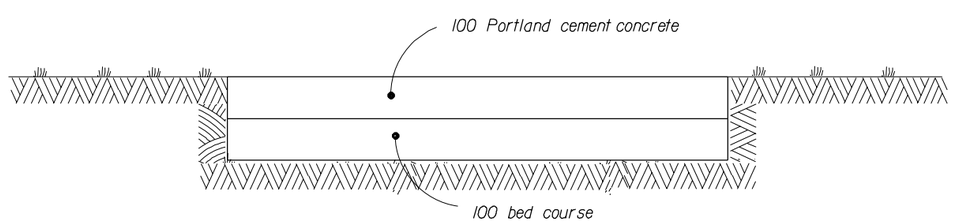

SIDEWALK

NO SCALE

U.S. DEPARTMENT OF TRANSPORTATION
FEDERAL HIGHWAY ADMINISTRATION
EASTERN FEDERAL LANDS HIGHWAY DIVISION

METRIC DETAIL

PORTLAND CEMENT CONCRETE SIDEWALK
OPTIONS 2 AND 3

DETAIL APPROVED FOR USE xx/xx

REVISED: 7/98

DETAIL EM615-01

6/9/2008 4:11:00 PM M:\Projects\shl\502(3)\proj_dev\CADD\Std-Det\details.dgn

em61501.dgn

NPS NO.	REG	STATE	PROJECT	SHEET NO.
304 / 41,920	SE	TN	TEA-21 SHIL 502(3)	L-22

Note:

1. Unless otherwise shown dimensions are in millimeters.

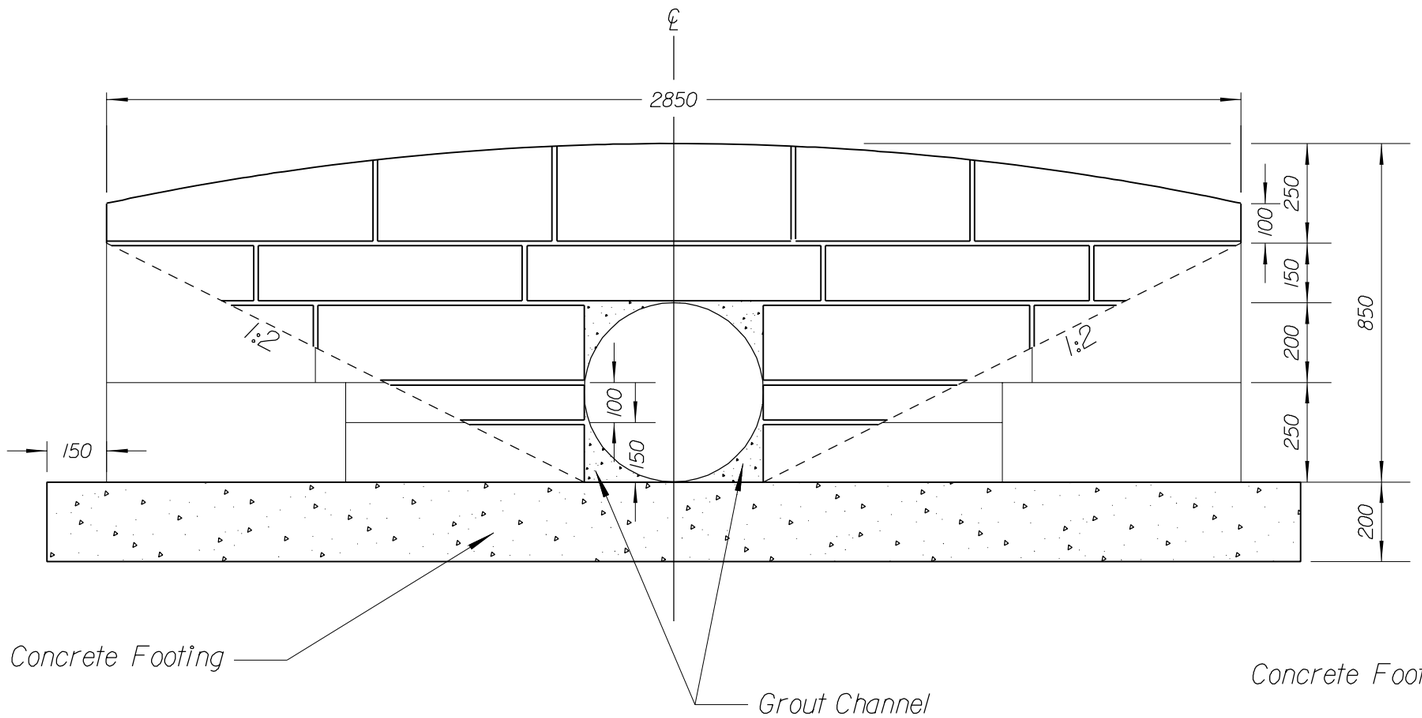

450 MM HEADWALL

NOT TO SCALE

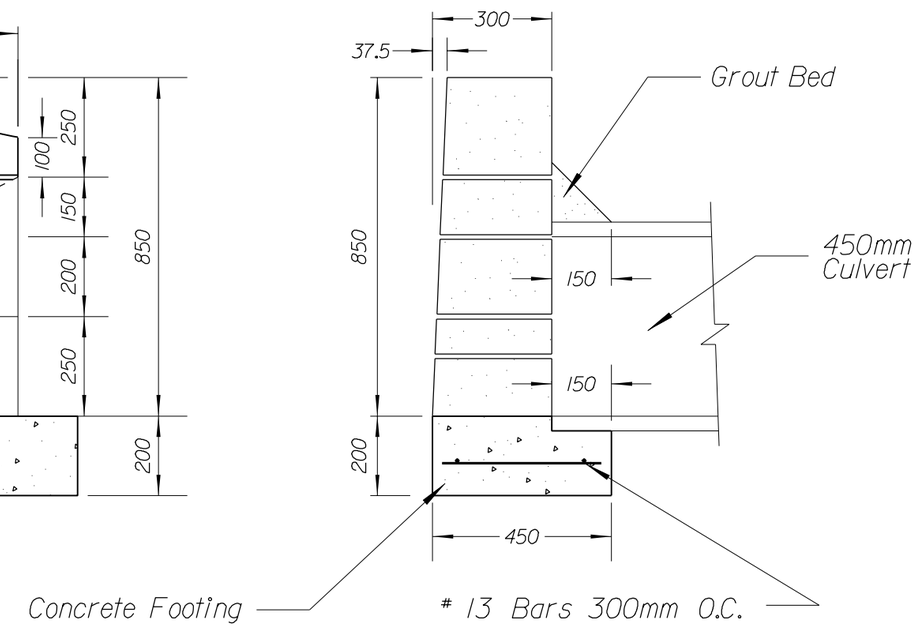

TYPICAL SECTION
450 MM HEADWALL

NOT TO SCALE

U.S. DEPARTMENT OF TRANSPORTATION
FEDERAL HIGHWAY ADMINISTRATION
EASTERN FEDERAL LANDS HIGHWAY DIVISION

METRIC DETAIL

STONE MASONRY HEADWALLS
450 MM CULVERT

Sheet 1 of 2

DETAIL APPROVED FOR USE xx/xx

REVISED:

DETAIL
EM620-A

6/9/2008 4:11:57 PM M:\Projects\shil\502(3)\proj_dev\CADD\Std-Def\details.dgn

em62001.dgn

NPS NO.	REG	STATE	PROJECT	SHEET NO.
304 / 41,920	SE	TN	TEA-21 SHIL 502(3)	L-23

SKEW ANGLE (Degrees)	LENGTH (L)
80	462
70	487
60	537
50	587
40	700
30	912
20	1325

Note:

1. Unless otherwise shown dimensions are in millimeters.

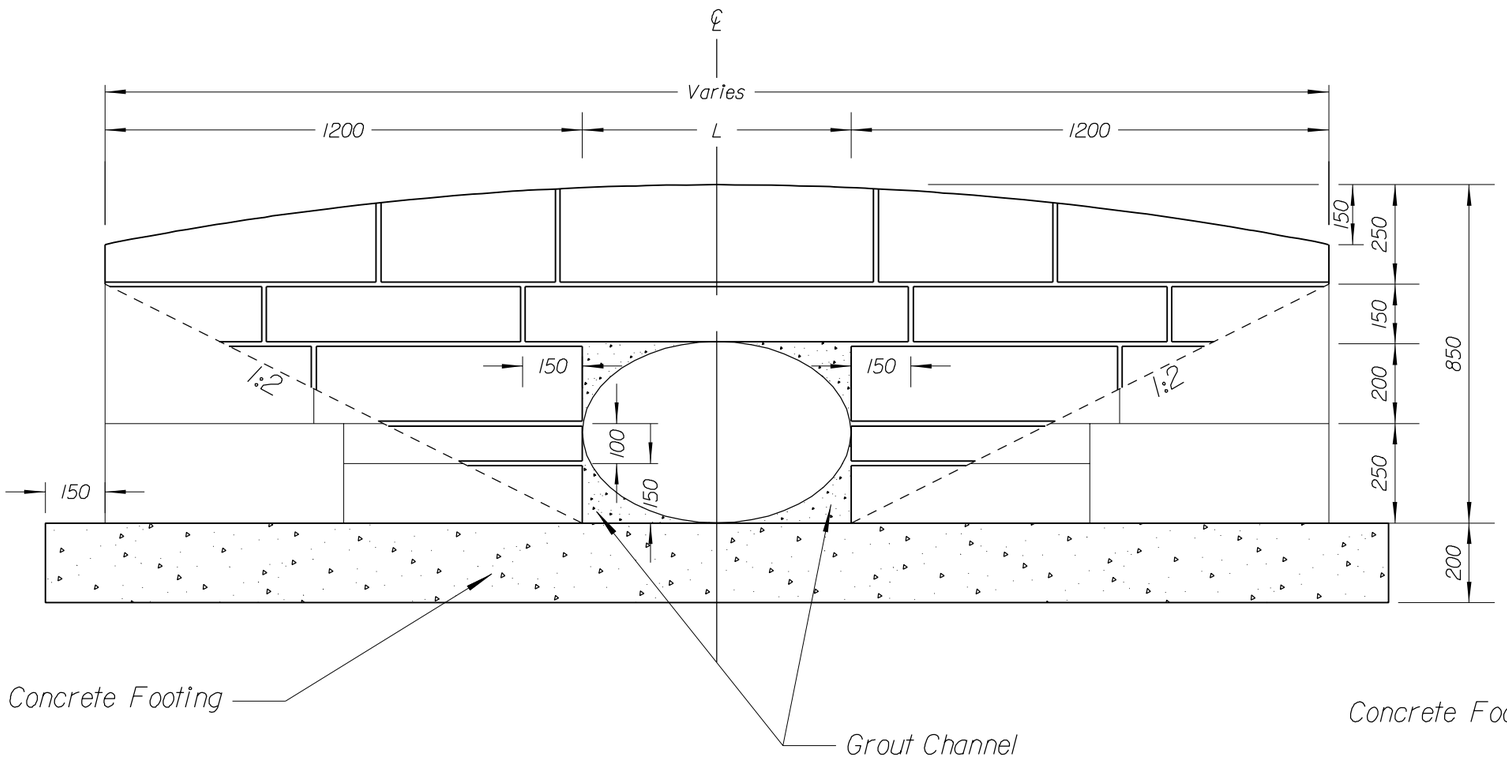

450 MM HEADWALL (SKEW)

NOT TO SCALE

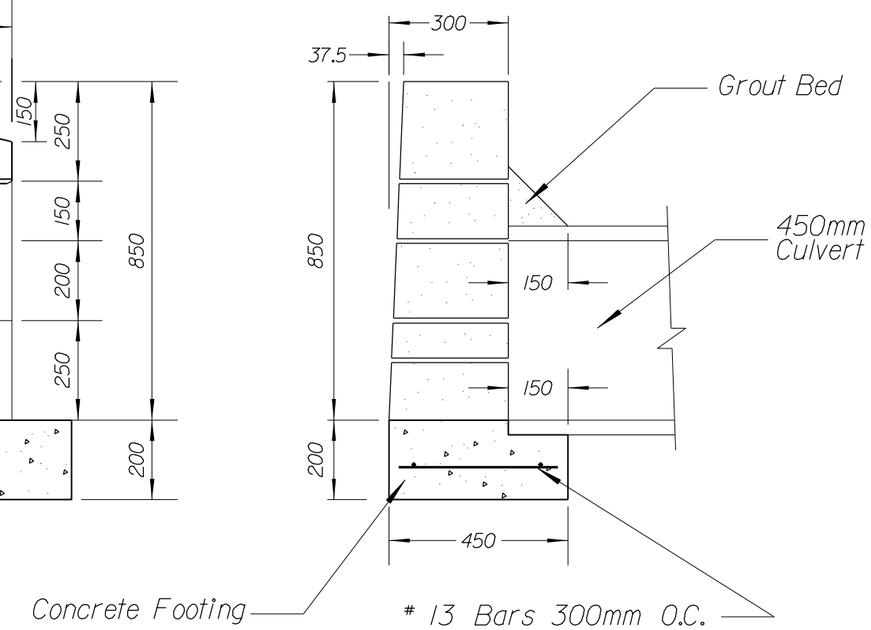

TYPICAL SECTION
450 MM HEADWALL

NOT TO SCALE

U.S. DEPARTMENT OF TRANSPORTATION
FEDERAL HIGHWAY ADMINISTRATION
EASTERN FEDERAL LANDS HIGHWAY DIVISION

METRIC DETAIL

STONE MASONRY HEADWALLS
450 MM CULVERT

Sheet 2 of 2

DETAIL APPROVED FOR USE xx/xx

DETAIL

REVISED:

EM620-A

6/9/2008 4:12:30 PM M:\Projects\sh\502(3)\proj_dev\CADD\Std-Det\details.dgn

em62001.dgn

NPS NO.	REG	STATE	PROJECT	SHEET NO.
304 / 41,920	SE	TN	TEA-21 SHIL 502(3)	L-24

NOTES:

1. Unless otherwise shown, dimensions are in millimeters.

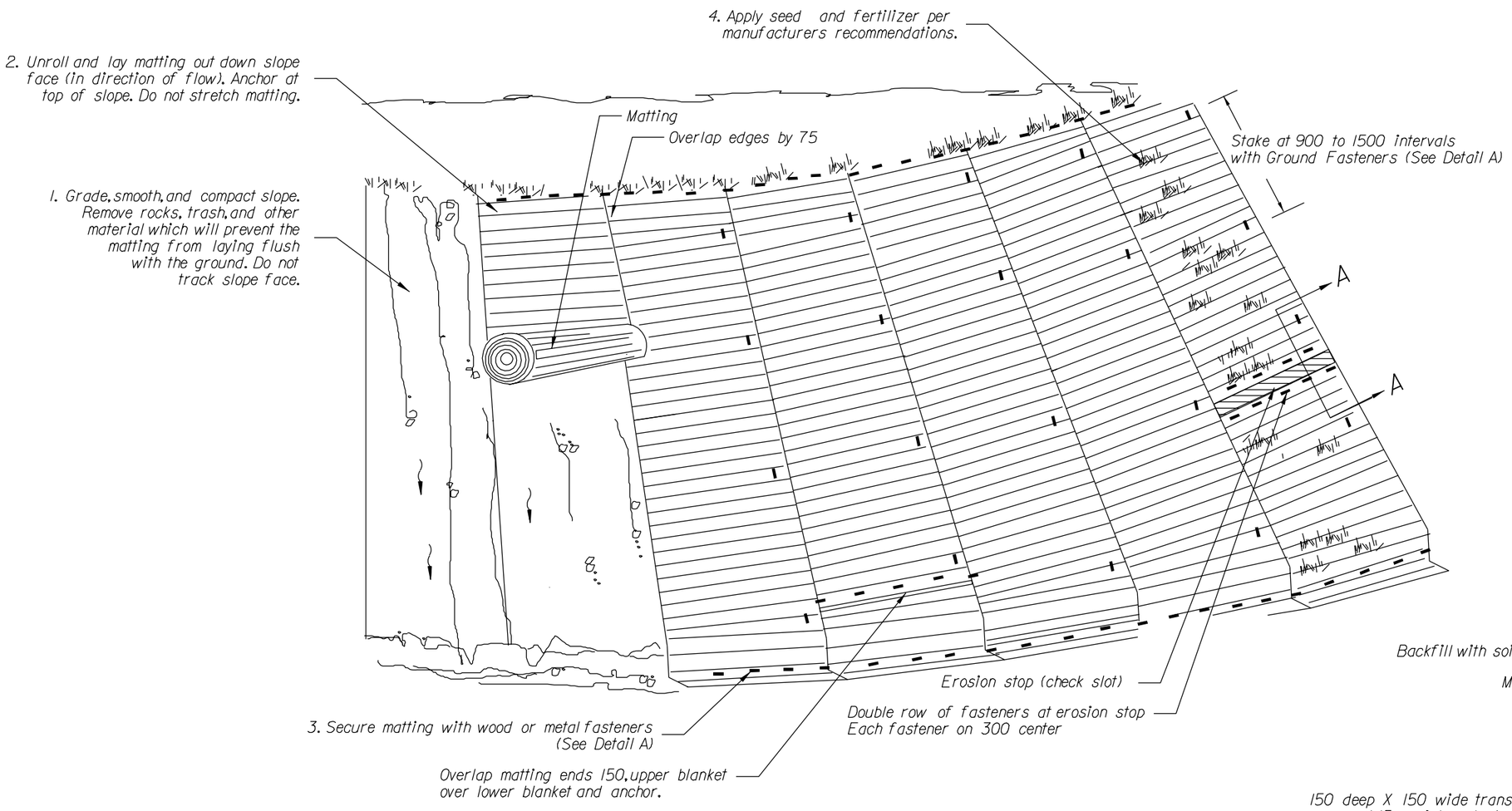

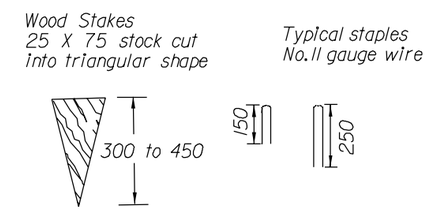

DETAIL A
Typical Ground Fasteners

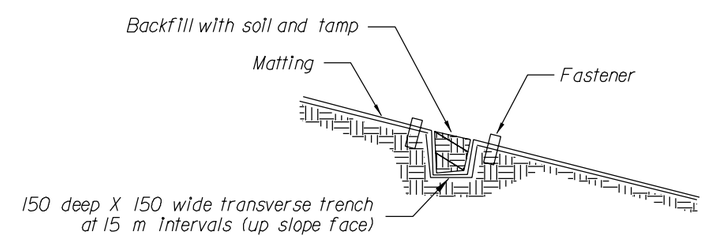

SECTION A-A
Erosion Stop (Check Slot) Detail

DETAIL FOR STABILIZING SLOPES WITH MATTING

NO SCALE

U.S. DEPARTMENT OF TRANSPORTATION
FEDERAL HIGHWAY ADMINISTRATION
EASTERN FEDERAL LANDS HIGHWAY DIVISION

METRIC DETAIL

SLOPE STABILIZATION WITH MATTING

DETAIL APPROVED FOR USE xx/xx

REVISED: 8/98

DETAIL EM629-1

6/9/2008 4:13:19 PM M:\Projects\sh\502(3)\proj_dev\CADD\Std-Det\details.dgn

NPS NO.	REG	STATE	PROJECT	SHEET NO.
304 / 41,920	SE	TN	TEA-21 SHIL 502(3)	L-25

ROADSIDE SIGN RURAL DISTRICT

NO SHOULDER

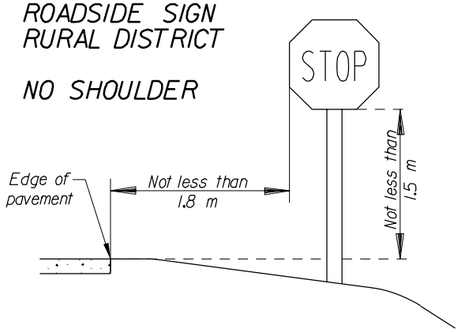

WARNING SIGN WITH ADVISORY SPEED PLAQUE RURAL DISTRICT

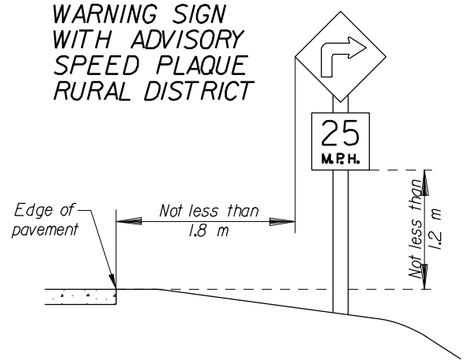

ROADSIDE SIGN BUSINESS OR RESIDENCE DISTRICT

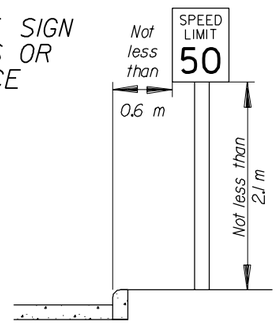

ROADSIDE SIGN RURAL DISTRICT

WITH SHOULDER

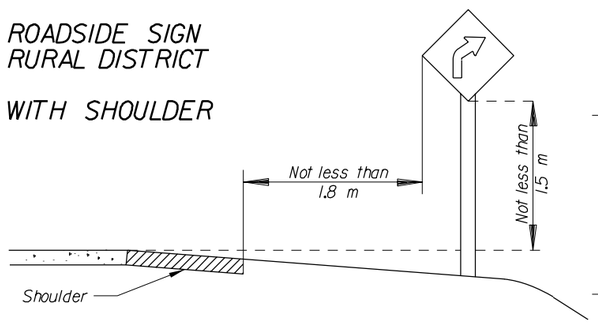

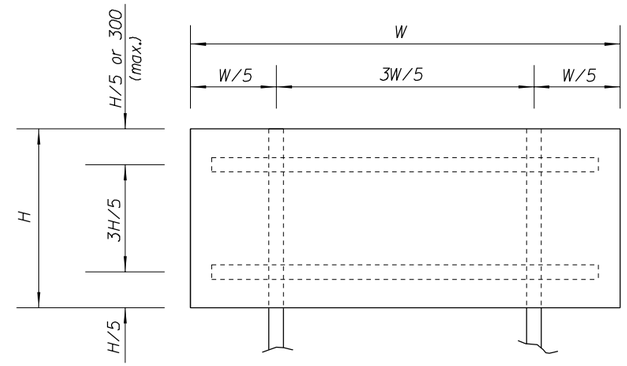

DOUBLE POST

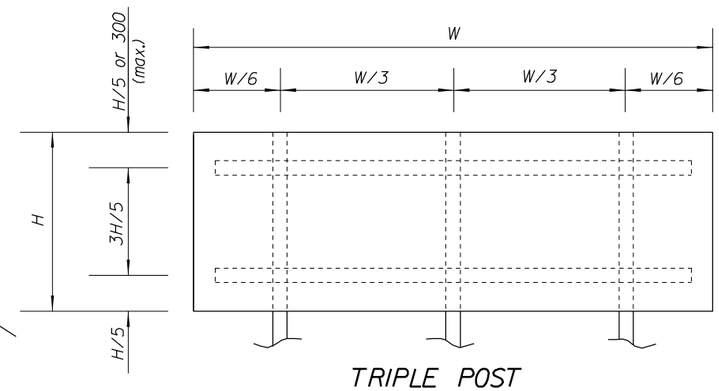

TRIPLE POST

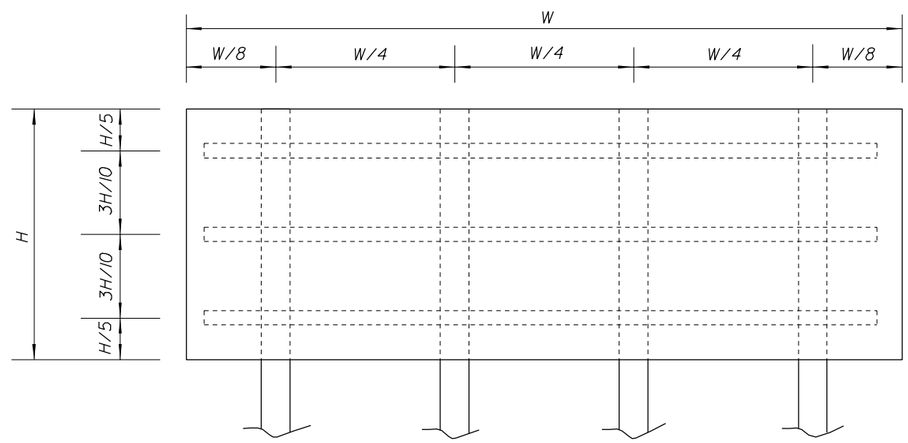

QUADRUPLE POST

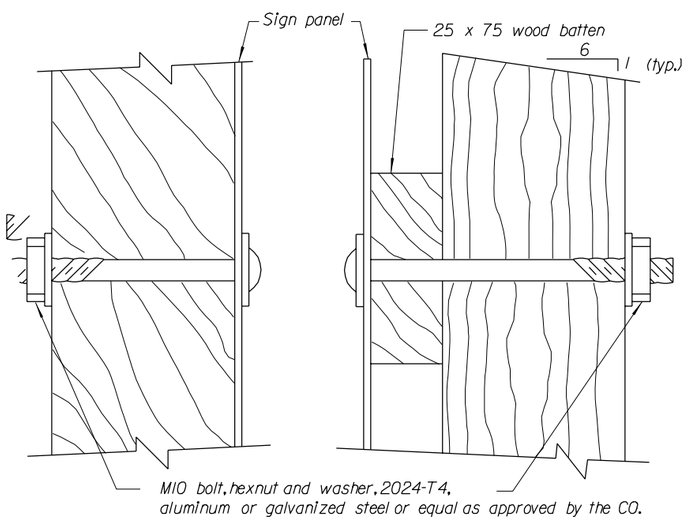

WITHOUT BATTEN

WITH BATTEN

FASTENER DETAIL

Post Size (millimeters)	D (min.) *	Maximum Sign Area (square meters)			
		Single Post	Double Post	Triple Post	Quadruple Post
100 x 100 (Wood)	900	0.9	1.8		
100 x 150 (Wood)	1200	1.4	3.3	4.2	5.6
150 x 150 (Wood)	1200	1.8	4.6	6.9	9.3

*See note 7

NOTES:

1. Unless otherwise shown, dimensions are in millimeters.
2. Locations and height to be in accordance with the "Manual on Uniform Traffic Control Devices for Streets and Highways" (MUTCD). Latest edition.
3. Use wood battens bolted to post at vertical spacings not to exceed 750 mm.
4. Use double posts if W is over 900 mm.
5. For sign punching details, See the blank standards in the "Standard Highway Signs" as specified in the MUTCD, latest edition.
6. For steel posts, provide a 6.4 x 150 mm soil plate. Use the same type of steel for the soil plate as for the post. Soil plate is not required for breakaway design.
7. For signs requiring post size 150 x 150 mm and greater, signs are considered to be non-breakaway if multiple posts are required and posts cannot be spaced a minimum of 2 meters apart. Place non-breakaway signs outside the clearzone or shield with approved barrier. Do not place holes in non-breakaway signs.
8. Furnish hardware in the metric sizes shown. Equivalent imperial sizes may be used when metric sizes are not available.
9. Depth, D, is to be in accordance with the 'Manual on Uniform Traffic Control Devices for Streets and Highways' (MUTCD), latest edition, Section 2A.21 and the AASHTO manual 'Specifications for Structural Supports for Highway Signs, Luminaires, and Traffic Signals', latest edition or as directed by the CO. D (min) is given in CHART A.

Post Size	Hole Diameter
100 x 100	None Required
100 x 150	40
150 x 150	50
150 x 200	75

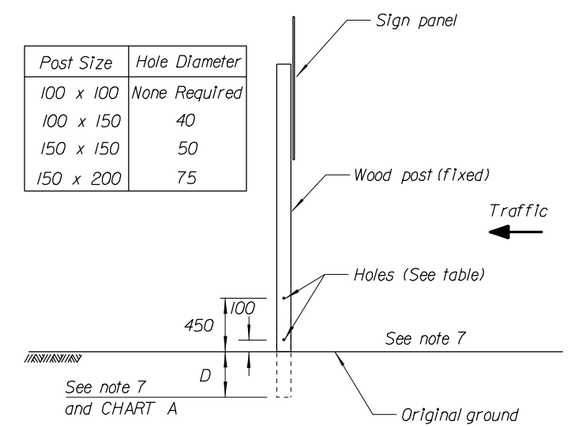

BREAKAWAY SUPPORT DETAIL

NO SCALE

U.S. DEPARTMENT OF TRANSPORTATION
FEDERAL HIGHWAY ADMINISTRATION
EASTERN FEDERAL LANDS HIGHWAY DIVISION

METRIC DETAIL

SIGN STRUCTURES

DETAIL APPROVED FOR USE --/----

REVISED: 09/95 07/98 03/2004 03/2006

DETAIL EM633-01

6/9/2008 4:16:23 PM M:\Projects\sh\502(3)\proj_dev\CADD\Std-Dev\7-STANDARD\EM633O1.dgn

em633O1.dgn

NPS NO.	REG	STATE	PROJECT	SHEET NO.
304 / 41,920	SE	TN	TEA-21 SHIL 502(3)	L-26

STEEL POST FOOTING DATA TABLE

POST SIZE	NOMINAL SIZE (mm)	STUB PROJ.	STUB LENGTH	FOOTING DIA.	FOOTING MINIMUM DEPTH
a	50 x 50	100	600	300	900
b	75 x 100	100	600	375	900
c	100 x 150	100	600	375	900

STEEL POST FOR MOUNTED SIGNS

POST SIZE	NOMINAL SIZE (mm)	BOLT SPECIFICATIONS	A	B	C	D	E	F	t_1	t_2	w	R
			BASE CONNECTION DATA TABLE (mm)									
a	50 x 50	M16 x 65 HS	165	100	125	40	20	30	15.88	4.76	4	18
b	75 x 100	50 N.m	215	100	175	40	20	30	15.88	4.76	6	18
c	100 x 150	M16 x 75 HS 50 N.m	250	125	215	65	17.5	30	19.05	6.35	8	18

FUSE PLATE DATA TABLE

POST SIZE	G	H	J	K	L	M	N	d_1	t_3	c_1	BOLT	TORQUE N.m
a	100	55	28	50	22	14	17	12	6.35	5	M10	25
b	100	55	28	75	31	22	17	14	7.94	5	M12	25
c	115	60	32	100	44	28	23	18	9.52	10	M16	25

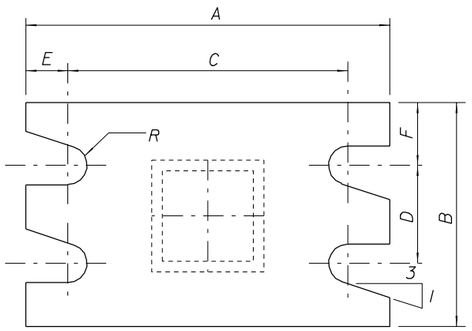

SECTION A-A

BREAKAWAY PLATE

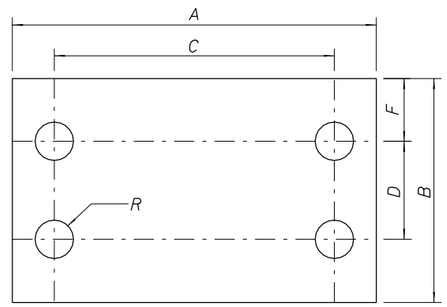

BOND BREAKING PLATE

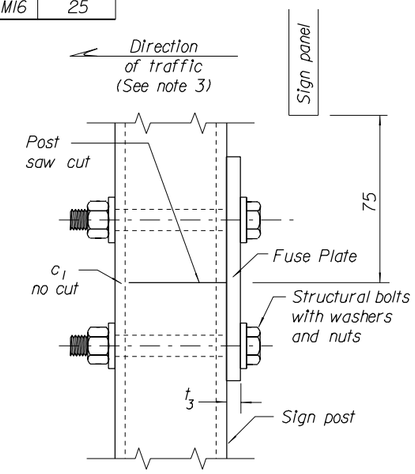

SIDE ELEVATION

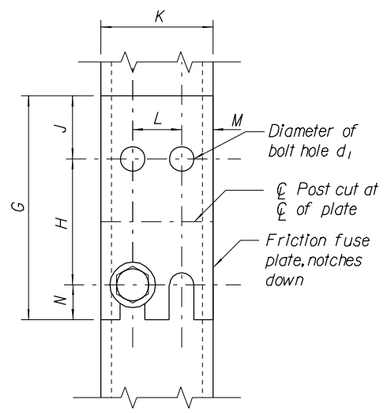

FRONT ELEVATION
(See Note 5)

FUSE PLATE

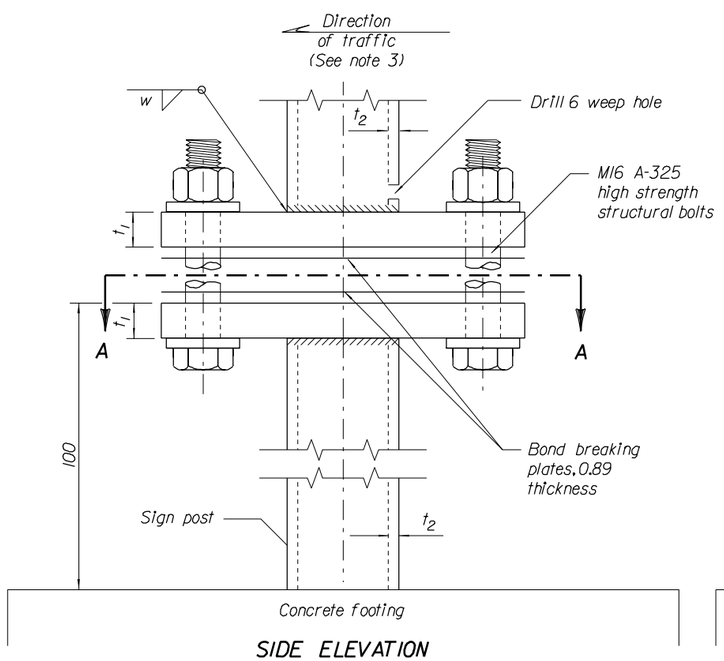

SIDE ELEVATION
(See Note 4)

MULTIPLE POST

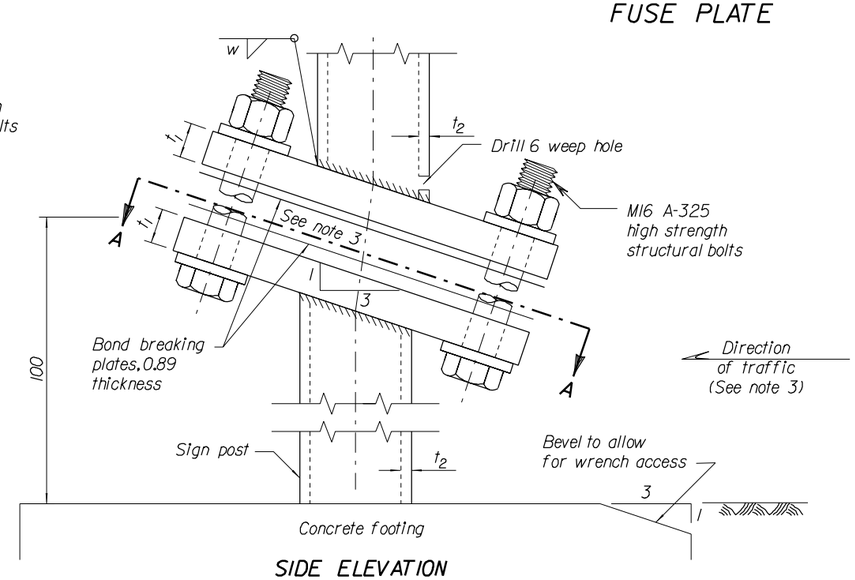

SIDE ELEVATION

SINGLE POST

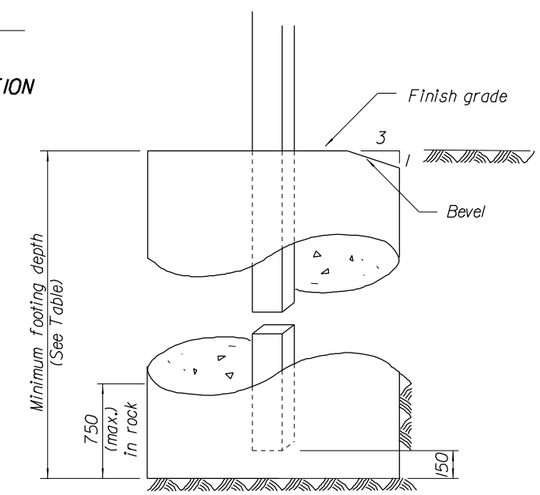

CONCRETE FOOTING DETAILS

NO SCALE

NOTES:

1. Unless otherwise shown, dimensions are in millimeters.
2. Breakaway design is not required for signs placed behind protective barriers.
3. Install breakaway assembly in the direction of major traffic.
4. Use the multiple post breakaway detail on single posts in medians where exposed to opposing lanes of traffic.
5. Use fuse plates on multiple post installations.
6. Paint the breakaway plates brown to match the final appearance of the weathering steel posts.
7. Furnish hardware in the metric sizes shown. Equivalent imperial sizes may be used when metric sizes are not available.

U.S. DEPARTMENT OF TRANSPORTATION
FEDERAL HIGHWAY ADMINISTRATION
EASTERN FEDERAL LANDS HIGHWAY DIVISION

METRIC DETAIL

BREAKAWAY SIGN SUPPORT, WEATHERING STEEL

DETAIL APPROVED FOR USE --/----

REVISED: 07/98

DETAIL EM633-02

6/9/2008 4:17:46 PM M:\Projects\shl\502(3)\proj_dev\CADD\Std-Dev\V7-STANDARD\EM63302.dgn

em63302.dgn

NPS NO.	REG	STATE	PROJECT	SHEET NO.
304 41,920	SE	TN	TEA-21 SHIL 502(3)	L-27

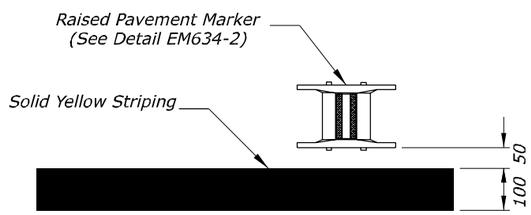

DETAIL A

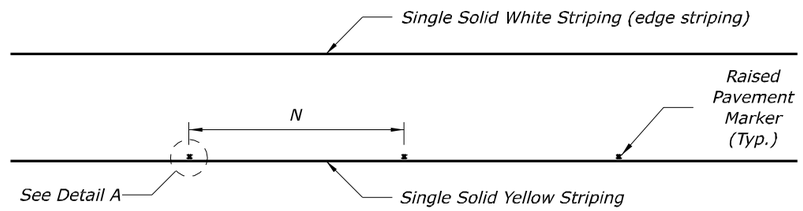

SINGLE SOLID YELLOW STRIPING WITH RAISED PAVEMENT MARKERS

NOTES:

1. Unless otherwise shown, dimensions are in millimeters.
2. All striping shall be in accordance with the Manual on Uniform Traffic Control Devices (MUTCD) latest edition.
3. Space and install Raised Pavement Markers in accordance with the MUTCD and as shown in this detail or as directed by the CO.

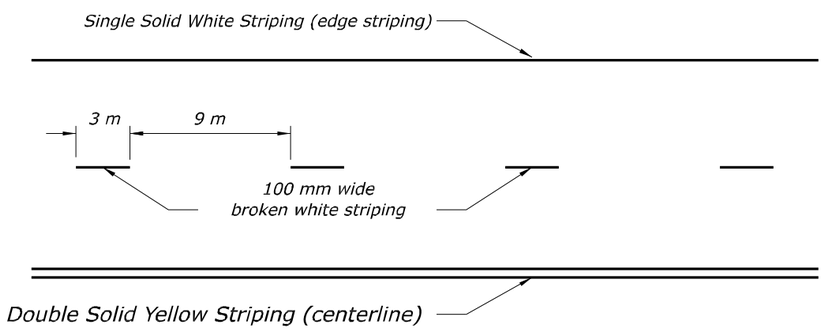

BROKEN SINGLE WHITE AND DOUBLE SOLID YELLOW STRIPING

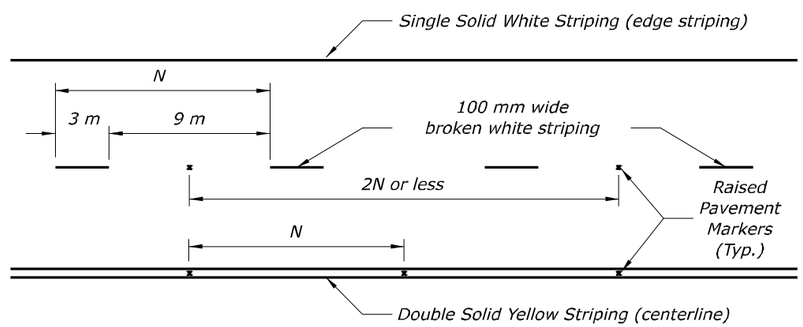

BROKEN SINGLE WHITE AND DOUBLE SOLID YELLOW STRIPING WITH RAISED PAVEMENT MARKERS

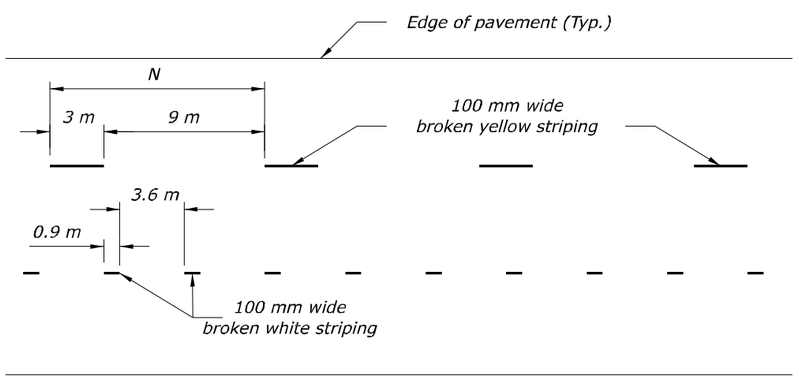

BROKEN SINGLE YELLOW AND DOTTED WHITE STRIPING

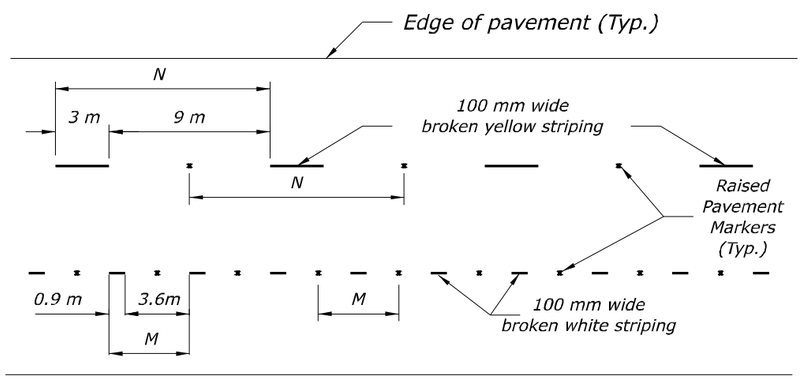

BROKEN SINGLE YELLOW AND DOTTED WHITE STRIPING WITH RAISED PAVEMENT MARKERS

NO SCALE

U.S. DEPARTMENT OF TRANSPORTATION
FEDERAL HIGHWAY ADMINISTRATION
EASTERN FEDERAL LANDS HIGHWAY DIVISION

METRIC DETAIL

PAVEMENT MARKINGS WITH AND WITHOUT RAISED PAVEMENT MARKERS

DETAIL APPROVED FOR USE

REVISED: 9/95 07/98 03/2007

DETAIL EM634-03

6/9/2008 4:19:01 PM M:\Projects\shil\502(3)\proj_dev\CADD\Std-Det\V8-STANDARD\st63403_detail.dgn

NPS NO.	REG	STATE	PROJECT	SHEET NO.
304 / 41,920	SE	TN	TEA-21 SHIL 502(3)	L-28

NOTES:

1. Unless otherwise shown, dimensions are in millimeters.
2. All striping shall be in accordance with the Manual on Uniform Traffic Control Devices (MUTCD) latest edition.

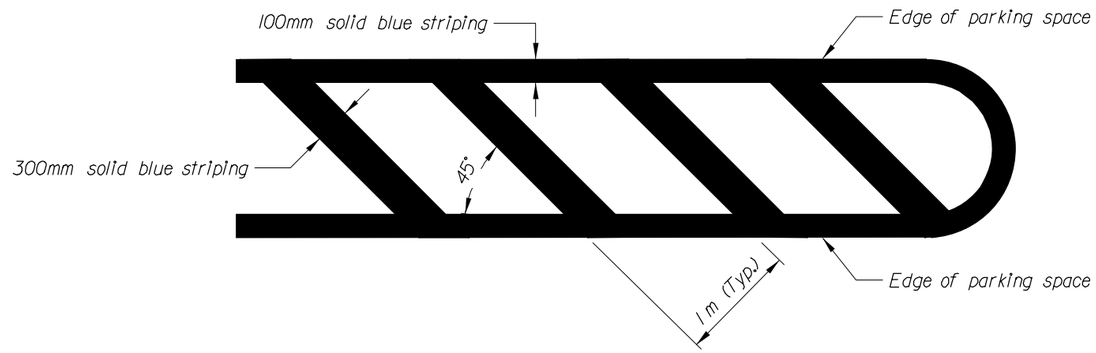

GORE AREA STRIPING - HANDICAP PARKING

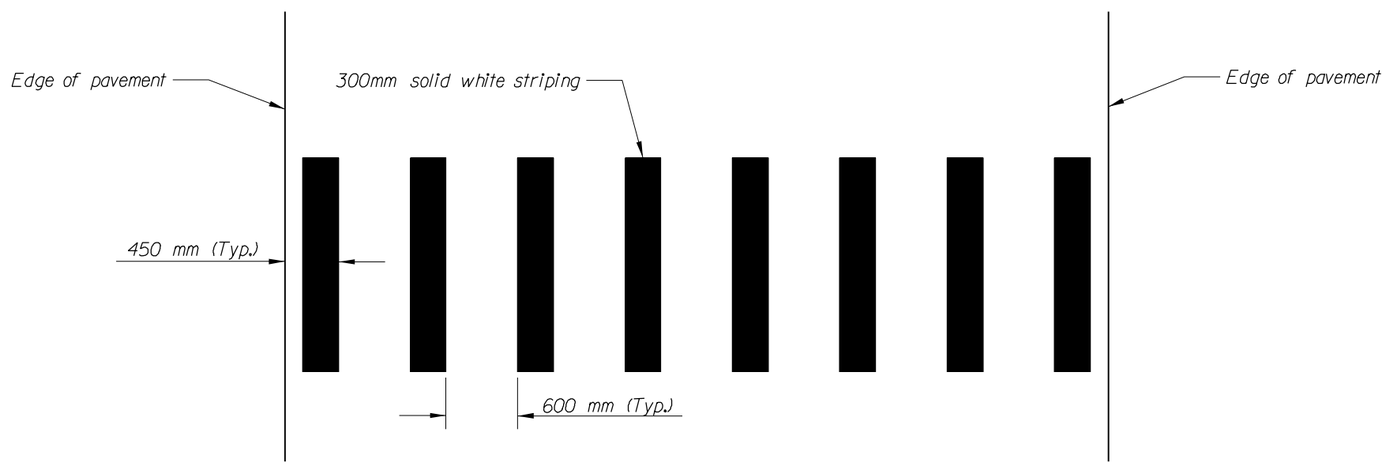

CROSSWALK STRIPING

U.S. DEPARTMENT OF TRANSPORTATION
FEDERAL HIGHWAY ADMINISTRATION
EASTERN FEDERAL LANDS HIGHWAY DIVISION

METRIC DETAIL

PAVEMENT MARKINGS IN NEUTRAL AREAS
OPTION 2

DETAIL APPROVED FOR USE xx/xx

REVISED: 6/00

DETAIL EM634-A

6/9/2008 4:14:10 PM M:\Projects\shl\502(3)\proj_dev\CADD\Std-Det\details.dgn

NPS NO.	REG	STATE	PROJECT	SHEET NO.
304 41,920	SE	TN	TEA-21 SHIL 502(3)	L-29

LENGTH AND SPACING TABLE

APPROACH SPEED*		LENGTH OF BUFFER SPACE	CHANNELIZING DEVICE		
			TAPER AREA	BUFFER SPACE	WORK SPACE
MPH	km/h	METER	SPACING IN METERS		
25	40	50	6	15	15
30	50	65	6	18	18
35	55	75	6	21	21
40	65	95	6	24	24
45	70	105	6	27	27
50	80	130	6	30	30
55	90	160	6	33	33

* Approach speed based on the regulatory posted speed, not the advisory speed.

SIGN SPACING TABLE

ROAD TYPE	DISTANCE BETWEEN SIGNS IN METERS		
	A	B	C
Urban less than 70 km/h [≤ 40 MPH]	30	30	30
Urban 70 km/h and greater [≥ 45 MPH]	100	100	100
Rural	150	150	150
Expressway/Freeway	300	450	800

NOTE:

1. Signs are shown for one direction of travel only. Place devices similar to those depicted for the opposite direction of travel.
2. Final location and spacing of signs and devices may be changed to fit field conditions as approved by the CO.
3. For pilot car operation, mount the PILOT CAR FOLLOW ME (G20-4) sign at a conspicuous location on the rear of vehicle. Prominently display the name of the contractor on the pilot car.
4. If closure is completely within the project limits, eliminate the "ROAD WORK AHEAD" (W20-1) and "END ROAD WORK" (G20-2) signs.
5. For night time flagging operation, provide floodlighting at flagger stations.
6. For project specific minimum width, refer to Special Contract Requirements, Section 156.
7. Do not allow equipment, materials, or vehicles to be parked or stored in the buffer space.
8. If signs will be in place more than 72 consecutive hours, use ground-mounted post.

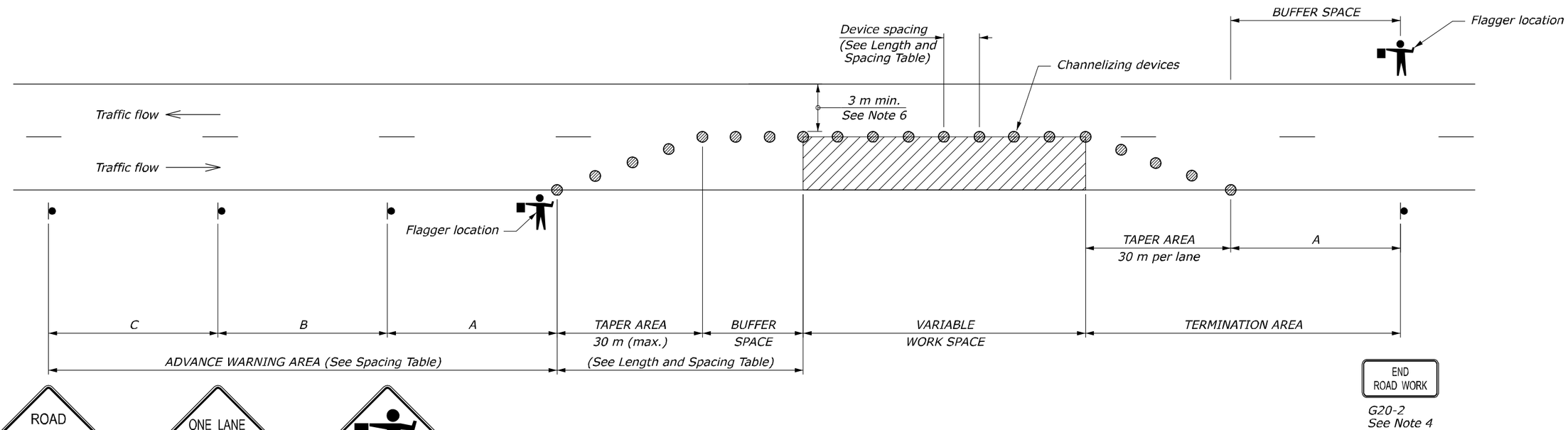

OPTION 3

U.S. DEPARTMENT OF TRANSPORTATION
FEDERAL HIGHWAY ADMINISTRATION
FEDERAL LANDS HIGHWAY

METRIC STANDARD

TEMPORARY TRAFFIC CONTROL SINGLE LANE CLOSURE LAYOUT (WITH FLAGGERS)

NO SCALE

STANDARD APPROVED FOR USE 6/2005

REVISED:
DRAFT: 1/2007

STANDARD
M635-6

6/9/2008 4:20:11 PM M:\Projects\shil\502(3)\proj_dev\CADD\Std-Det\V8-STANDARD\st63506.dgn

NPS NO.	REG	STATE	PROJECT	SHEET NO.
304 41,920	SE	TN	TEA-21 SHIL 502(3)	L-30

LENGTH AND SPACING TABLE

APPROACH SPEED*		MINIMUM TAPER LENGTH**	LENGTH OF BUFFER SPACE	CHANNELIZING DEVICE		
				TAPER AREA	BUFFER SPACE	WORK SPACE
MPH	km/h	METER	METER	SPACING IN METERS		
25	40	Shoulder taper formula:	50	8	15	15
30	50	$L = \frac{WS^2}{465}$ for S < 70 km/h	65	9	18	18
35	55	$L = \frac{WS}{4.8}$ for S ≥ 70 km/h	75	10	21	21
40	65	Where:	95	12	24	24
45	70	L = Minimum length of taper	105	14	27	27
50	80	W = Width of offset in meters S = Metric equivalent of posted speed limit or 85 percentile speed prior to work in kilometers per hour	130	15	30	30
55	90		160	16	33	33

* Approach speed based on the regulatory posted speed, not the advisory speed.

** Lengthen taper as needed to provide minimum of three channelizing devices in taper at required spacing.

SIGN SPACING TABLE

ROAD TYPE	DISTANCE BETWEEN SIGNS IN METERS		
	A	B	C
Urban less than 70 km/h [≤ 40 MPH]	30	30	30
Urban 70 km/h and greater [≥ 45 MPH]	100	100	100
Rural	150	150	150
Expressway/Freeway	300	450	800

NOTE:

1. Final location and spacing of signs and devices may be changed to fit field conditions as approved by the CO.
2. For project specific minimum width, refer to Special Contract Requirements, Section 156.
3. If shoulder closure is completely within the project limits, eliminate the "ROAD WORK AHEAD" (W20-1) and "END ROAD WORK" (G20-2) signs.
4. Remove or cover Workers symbol sign (W21-1a) when workers are not present.
5. Do not allow equipment, materials, or vehicles to be parked or stored in the buffer space.
6. If signs will be in place more than 72 consecutive hours, use ground-mounted post.

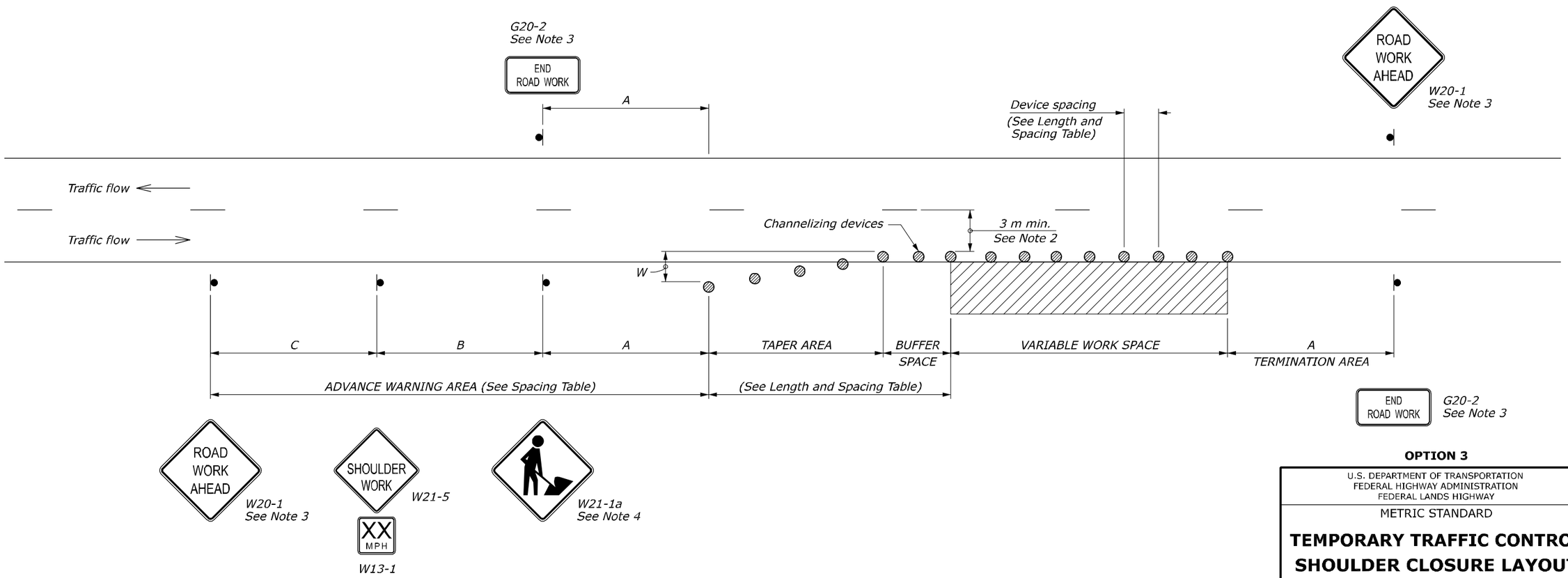

OPTION 3

U.S. DEPARTMENT OF TRANSPORTATION
FEDERAL HIGHWAY ADMINISTRATION
FEDERAL LANDS HIGHWAY

METRIC STANDARD

TEMPORARY TRAFFIC CONTROL SHOULDER CLOSURE LAYOUT

NO SCALE

STANDARD APPROVED FOR USE 6/2005

REVISED:
DRAFT: 1/2007

STANDARD
M635-10

6/9/2008 4:21:09 PM M:\Projects\shl\502(3)\proj_dev\CADD\Std-Det\V8-STANDARD\sf6350.dgn

NPS NO.	REG	STATE	PROJECT	SHEET NO.
304 41,920	SE	TN	TEA-21 SHIL 502(3)	L-31

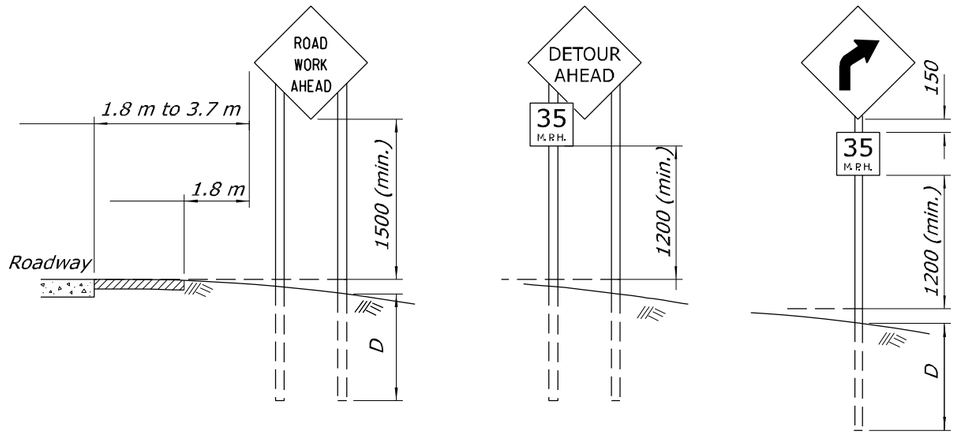

RURAL AREA

RURAL AREA

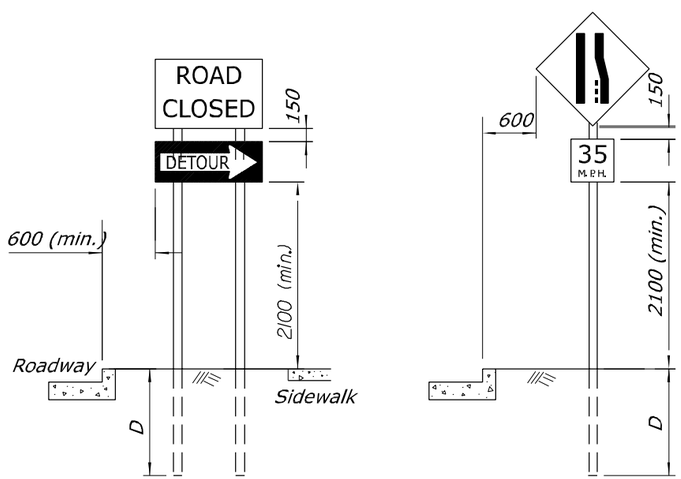

URBAN AREA

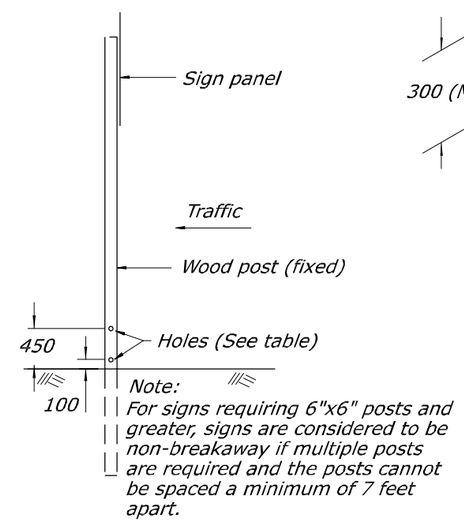

BREAKAWAY SUPPORT DETAIL
(FIXED SIGNS - 100 x 150 mm AND GREATER POSTS)

FIXED ROADWAY SIGNS

Post size	D	Hole Dia.	Maximum Sign Area -square meters			
			1 Post	2 Posts	3 Posts	4 Posts
100 x 100	900	None Req'd	1	2		
100 x 150	1200	40		3	4.5	6.5
150 x 150	1200	50		4.5	7	9
150 x 200	1500	75		8	11.5	15

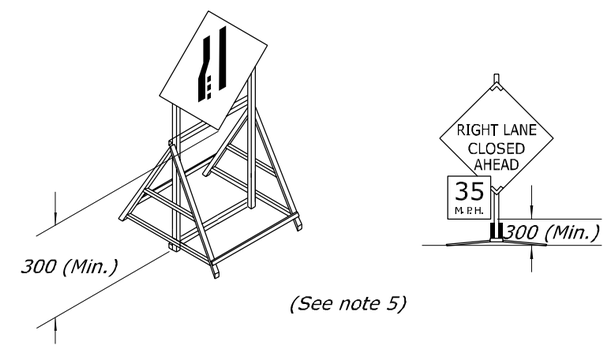

PORTABLE SIGNS
(See note 4)

NOTES:

1. Unless otherwise shown, dimensions are in millimeters.
2. Mount signs that are wider than 900 mm or larger than 1 square meter on two or more posts. See Table.
3. All lumber dimensions are nominal.
4. Alternate details for portable signs are acceptable provided the sign mounts hold the sign face in a vertical plane. Portable signs may be mounted lower than fixed signs when approved by the CO. Ensure all portable sign supports meet the requirements of NCHRP-350 for crashworthiness.
5. When parking is permitted within 60 meters of the sign, mount the sign a minimum of 2.1 meters above the pavement surface.
6. When approved by the CO and the Utility Company, utility poles may be used for sign mounting.
7. For posts greater than 100 x 100 mm, see the Breakaway Support Detail. If breakaway design cannot be used, due to post spacing, the sign should be placed outside the clear zone or be shielded by barrier.
8. For signs requiring posts 150 x 150 mm and greater, signs are considered to be non-breakaway if multiple posts are required and posts cannot be spaced a minimum of 2 meters apart.

NO SCALE

U.S. DEPARTMENT OF TRANSPORTATION
FEDERAL HIGHWAY ADMINISTRATION
EASTERN FEDERAL LANDS HIGHWAY DIVISION

METRIC DETAIL

CONSTRUCTION TRAFFIC CONTROL SIGN MOUNTING

DETAIL APPROVED FOR USE 2/2007
REVISED: 02/07 06/07 02/08

DETAIL
EM635-01

6/9/2008 4:23:41 PM M:\Projects\shl\502(3)\proj_dev\CADD\Std-Det\V8-STANDARD\sf6350l_detail.dgn

NPS NO.	REG	STATE	PROJECT	SHEET NO.
304 / 41,920	SE	TN	TEA-21 SHIL 502(3)	M-1

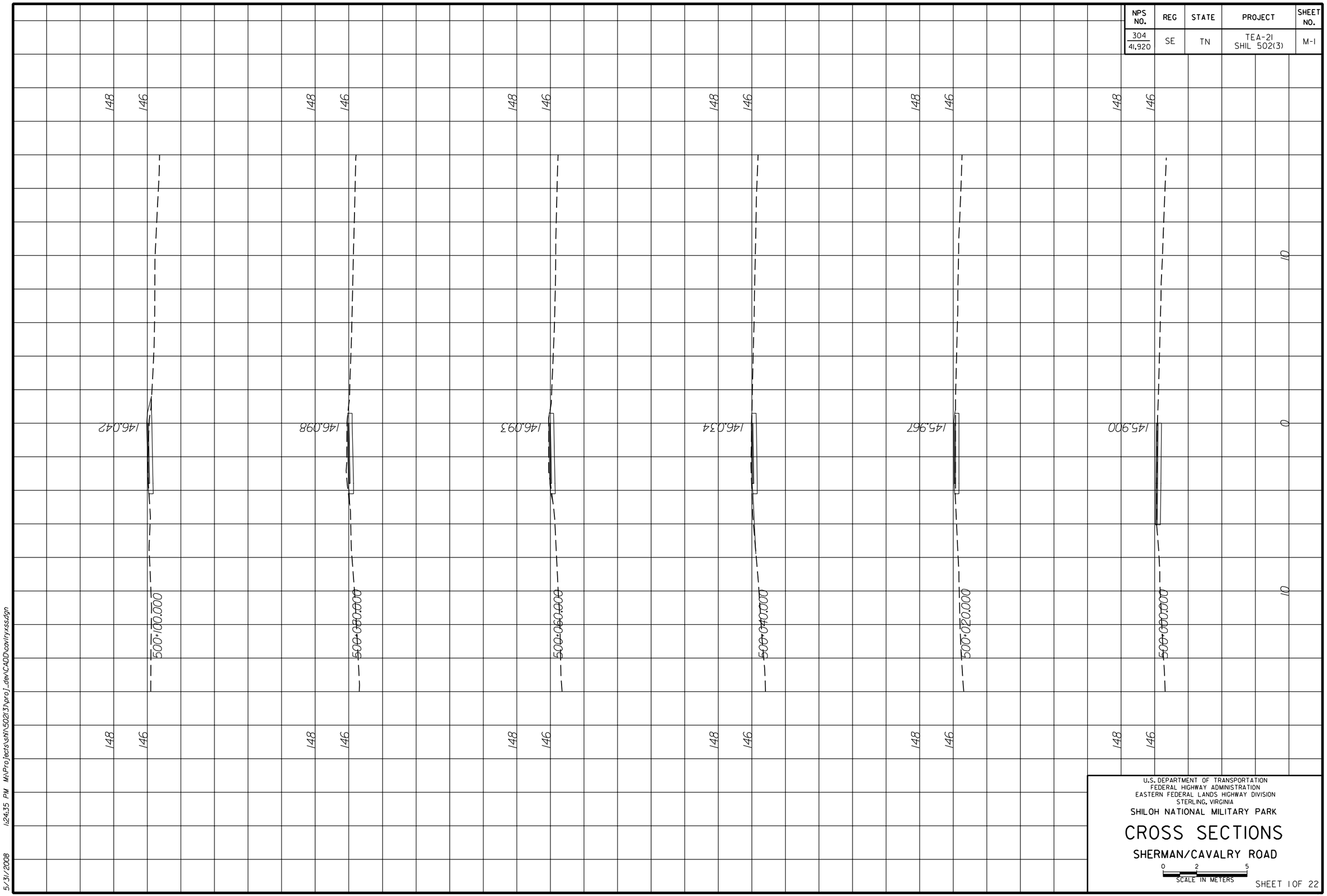

U.S. DEPARTMENT OF TRANSPORTATION
FEDERAL HIGHWAY ADMINISTRATION
EASTERN FEDERAL LANDS HIGHWAY DIVISION
STERLING, VIRGINIA

SHILOH NATIONAL MILITARY PARK

CROSS SECTIONS

SHERMAN/CAVALRY ROAD

0 2 5
SCALE IN METERS

SHEET 1 OF 22

5/31/2008 1:24:35 PM M:\Projects\shil\502(3)\proj_dev\CADD\cavlryxssdgn

NPS NO.	REG	STATE	PROJECT	SHEET NO.
304 / 41,920	SE	TN	TEA-21 SHIL 502(3)	M-2

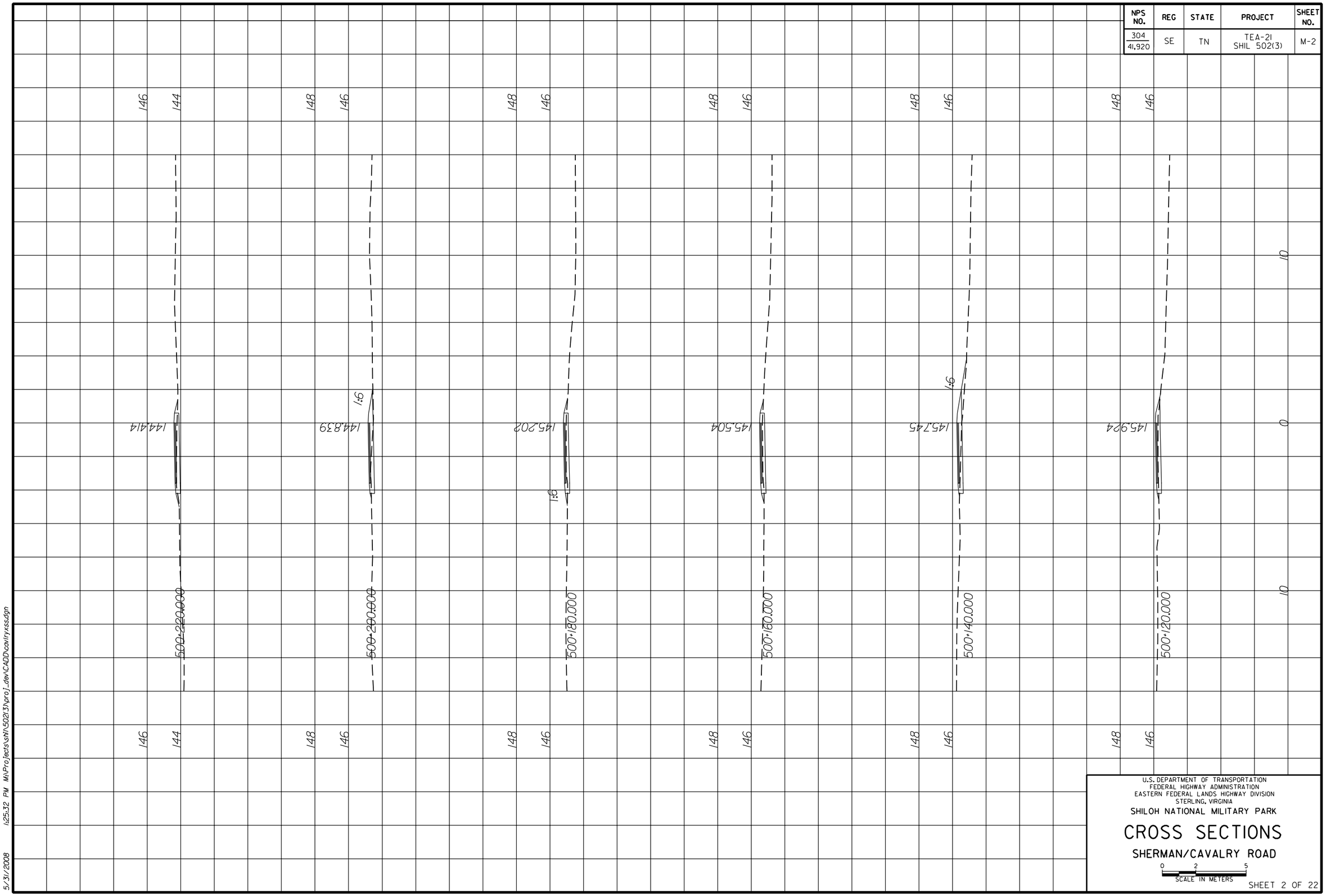

U.S. DEPARTMENT OF TRANSPORTATION
FEDERAL HIGHWAY ADMINISTRATION
EASTERN FEDERAL LANDS HIGHWAY DIVISION
STERLING, VIRGINIA

SHILOH NATIONAL MILITARY PARK

CROSS SECTIONS

SHERMAN/CAVALRY ROAD

0 2 5
SCALE IN METERS

SHEET 2 OF 22

5/31/2008 1:25:32 PM M:\Projects\shil\502(3)\proj_dev\CADD\civil\yxsd.dgn

NPS NO.	REG	STATE	PROJECT	SHEET NO.
304 / 41,920	SE	TN	TEA-21 SHIL 502(3)	M-3

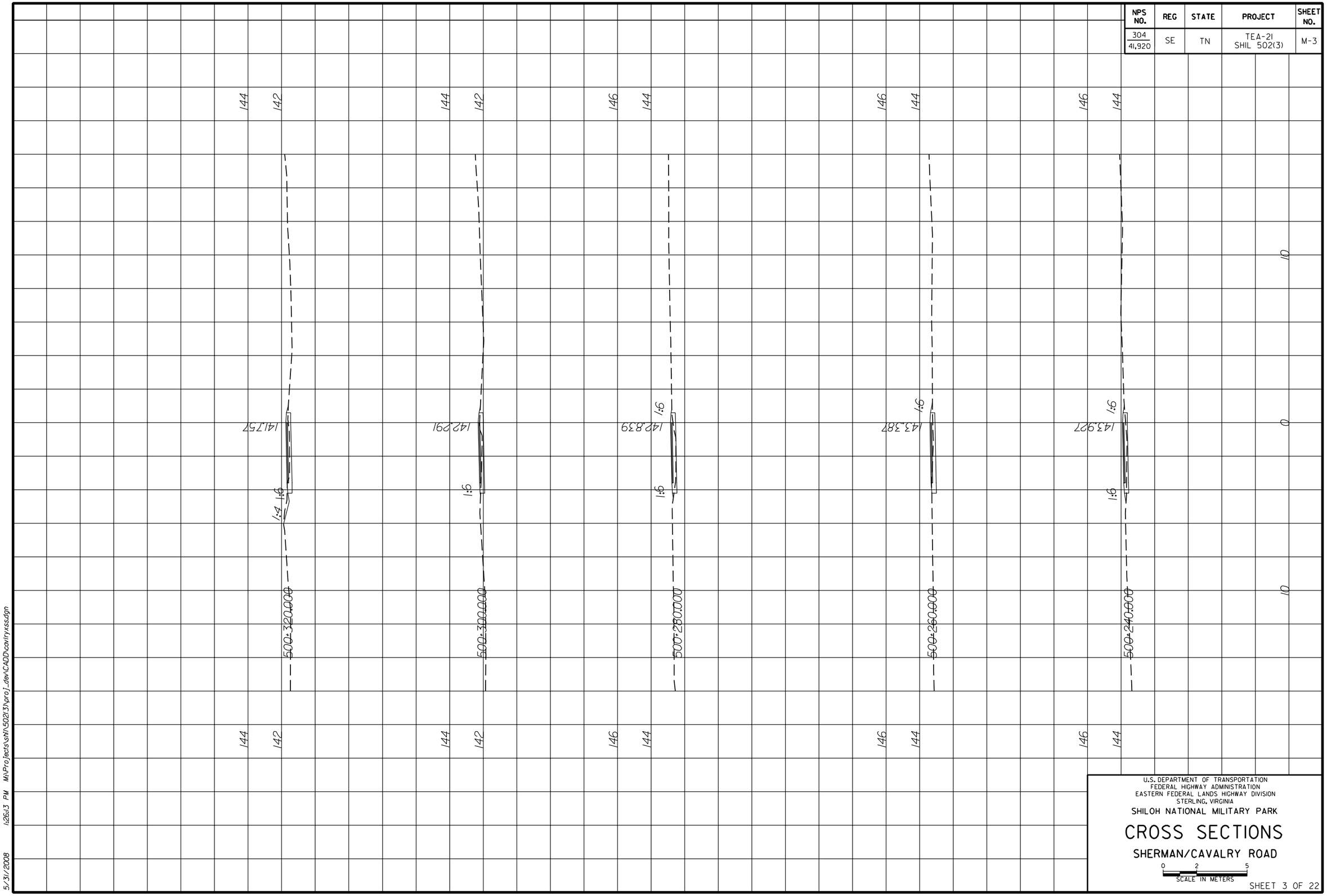

U.S. DEPARTMENT OF TRANSPORTATION
FEDERAL HIGHWAY ADMINISTRATION
EASTERN FEDERAL LANDS HIGHWAY DIVISION
STERLING, VIRGINIA

SHILOH NATIONAL MILITARY PARK

CROSS SECTIONS

SHERMAN/CAVALRY ROAD

0 2 5
SCALE IN METERS

SHEET 3 OF 22

5/31/2008 1:26:13 PM M:\Projects\sN\502(3)\proj_dev\CADD\cavlryxss.dgn

NPS NO.	REG	STATE	PROJECT	SHEET NO.
304 / 41,920	SE	TN	TEA-21 SHIL 502(3)	M-4

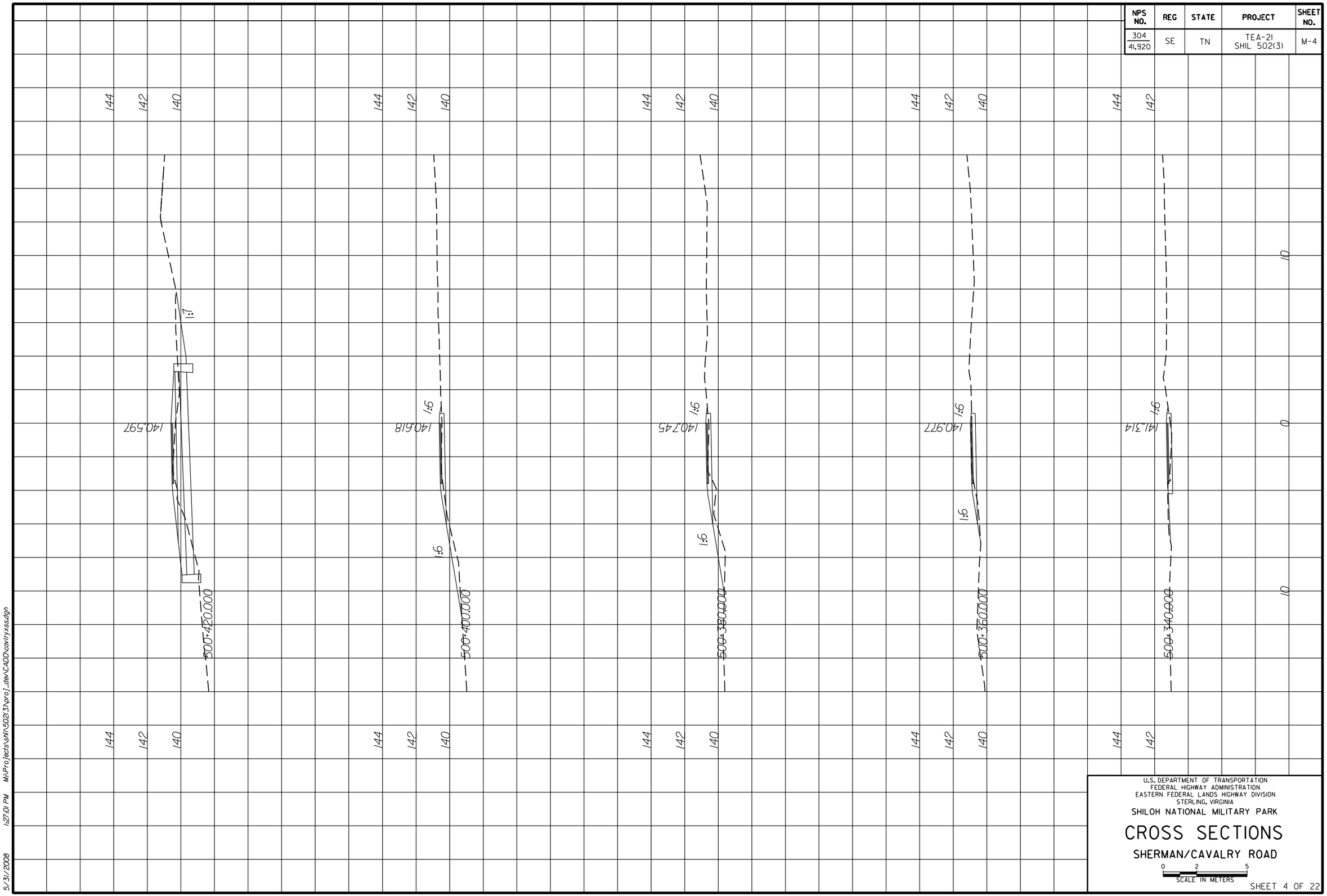

U.S. DEPARTMENT OF TRANSPORTATION
FEDERAL HIGHWAY ADMINISTRATION
EASTERN FEDERAL LANDS HIGHWAY DIVISION
STERLING, VIRGINIA

SHILOH NATIONAL MILITARY PARK

CROSS SECTIONS

SHERMAN/CAVALRY ROAD

0 2 5
SCALE IN METERS

SHEET 4 OF 22

5/31/2008 1:27:01 PM M:\Projects\shl\502(3)\proj_dev\CADD\cov\ryxss.dgn

NPS NO.	REG	STATE	PROJECT	SHEET NO.
304 / 41,920	SE	TN	TEA-21 SHIL 502(3)	M-5

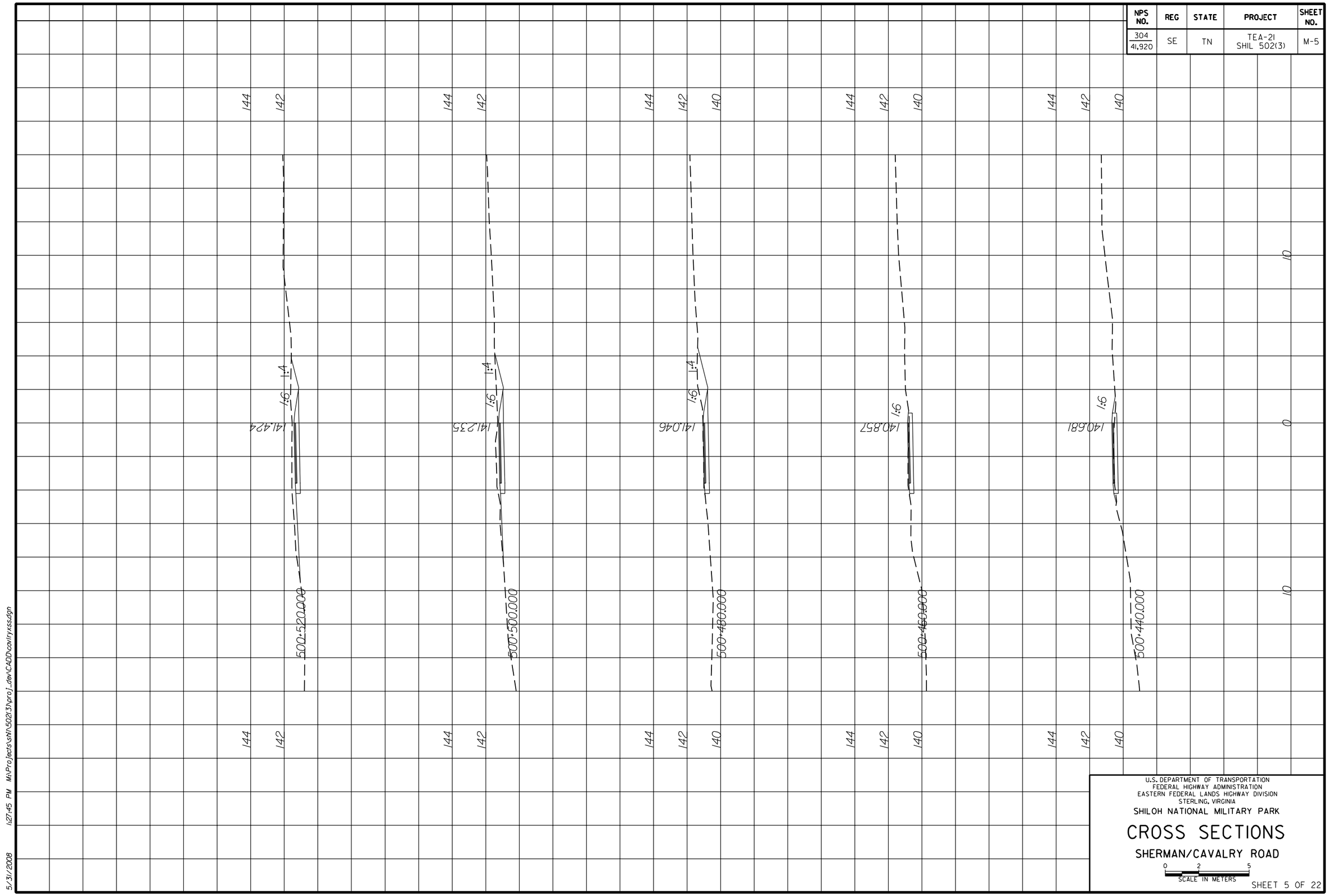

U.S. DEPARTMENT OF TRANSPORTATION
FEDERAL HIGHWAY ADMINISTRATION
EASTERN FEDERAL LANDS HIGHWAY DIVISION
STERLING, VIRGINIA

SHILOH NATIONAL MILITARY PARK

CROSS SECTIONS

SHERMAN/CAVALRY ROAD

0 2 5
SCALE IN METERS

SHEET 5 OF 22

5/31/2008 1:27:45 PM M:\Projects\shil\502(3)\proj_dev\CADD\cavlryxssdgn

NPS NO.	REG	STATE	PROJECT	SHEET NO.
304 / 41,920	SE	TN	TEA-21 SHIL 502(3)	M-6

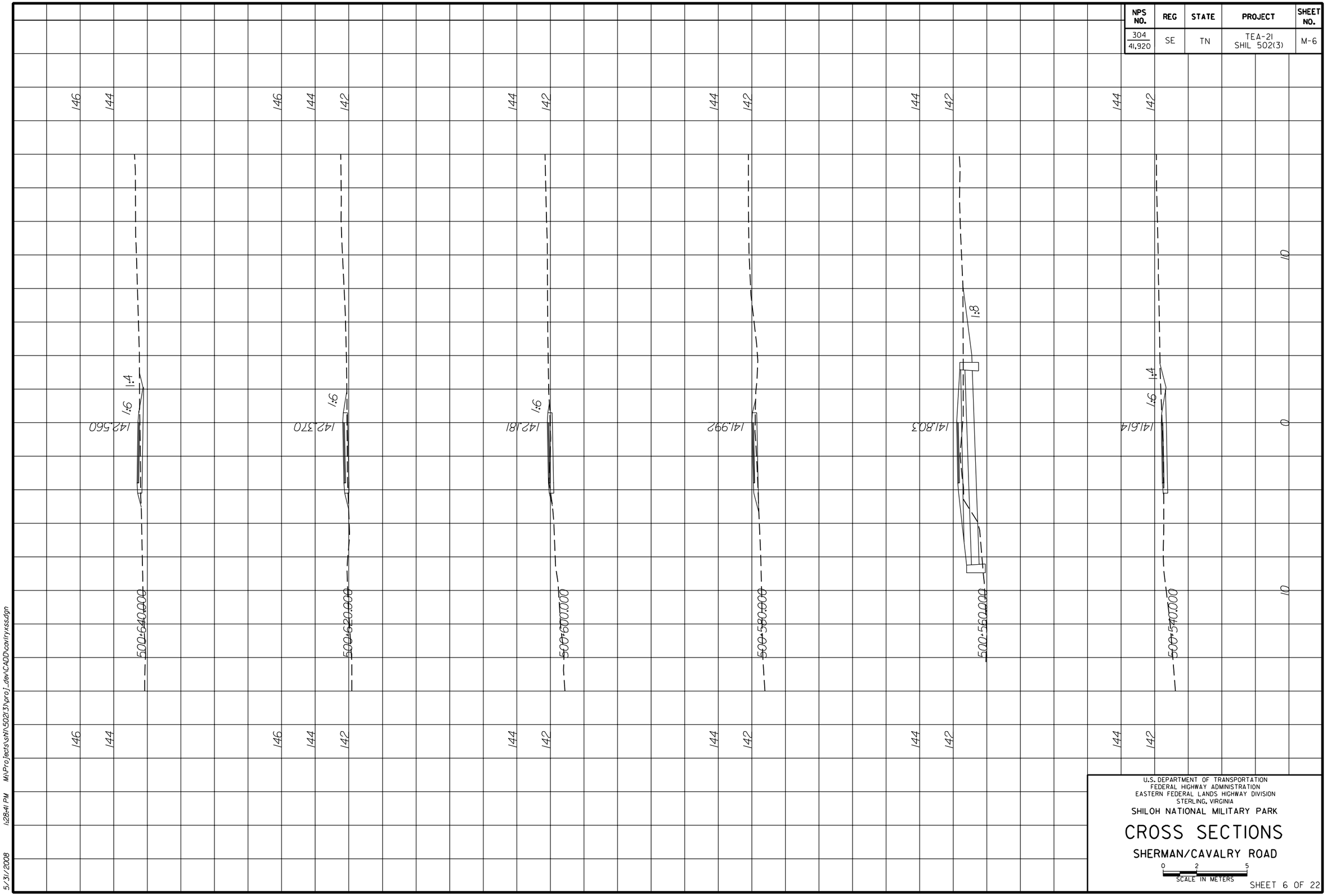

U.S. DEPARTMENT OF TRANSPORTATION
FEDERAL HIGHWAY ADMINISTRATION
EASTERN FEDERAL LANDS HIGHWAY DIVISION
STERLING, VIRGINIA

SHILOH NATIONAL MILITARY PARK

CROSS SECTIONS

SHERMAN/CAVALRY ROAD

0 2 5
SCALE IN METERS

SHEET 6 OF 22

5/31/2008 1:28:41 PM M:\Projects\sfN\502(3)\proj_dev\CADD\civil\ryxss.dgn

NPS NO.	REG	STATE	PROJECT	SHEET NO.
304 / 41,920	SE	TN	TEA-21 SHIL 502(3)	M-7

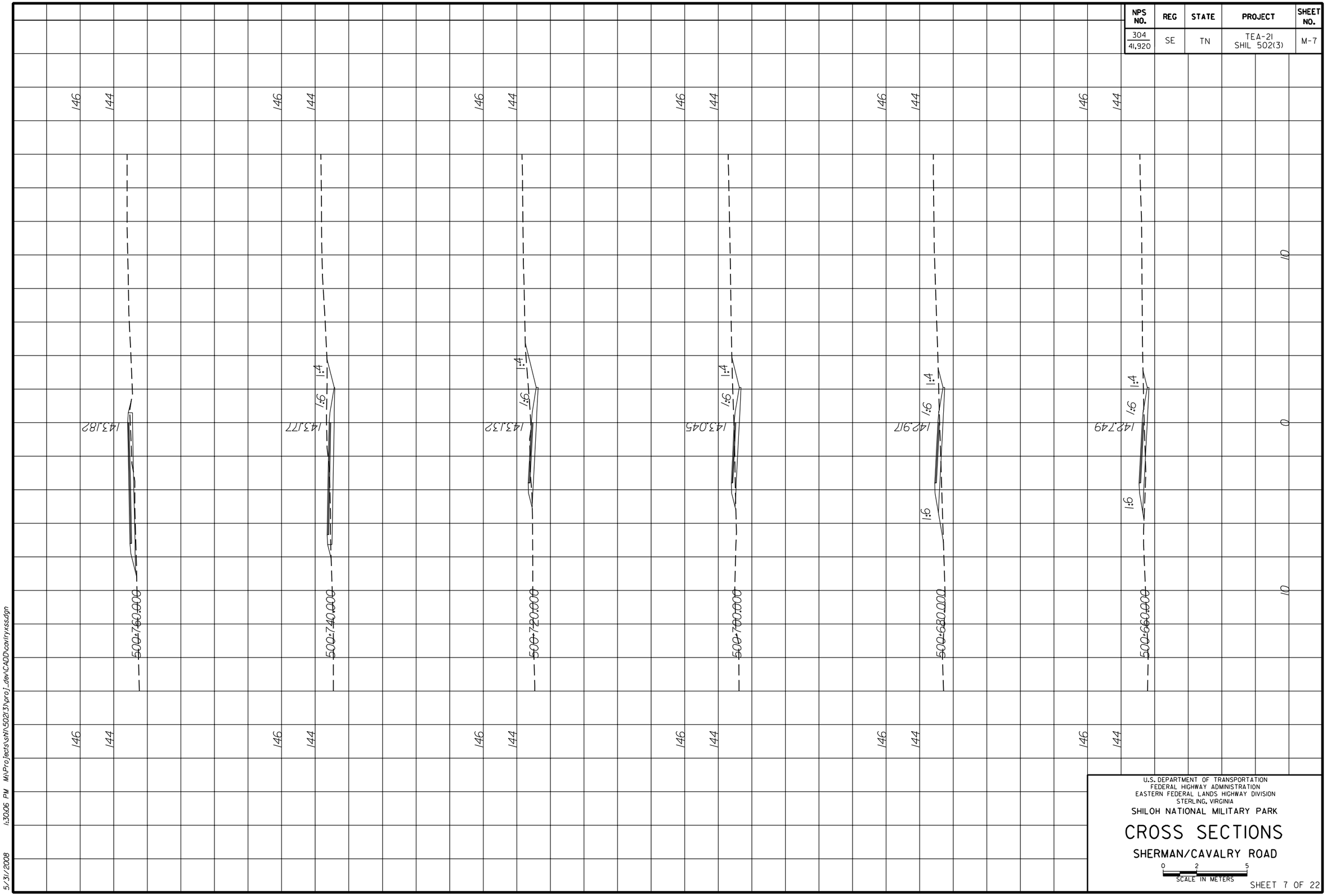

U.S. DEPARTMENT OF TRANSPORTATION
FEDERAL HIGHWAY ADMINISTRATION
EASTERN FEDERAL LANDS HIGHWAY DIVISION
STERLING, VIRGINIA

SHILOH NATIONAL MILITARY PARK

CROSS SECTIONS

SHERMAN/CAVALRY ROAD

0 2 5
SCALE IN METERS

SHEET 7 OF 22

5/31/2008 1:30:06 PM M:\Projects\sh\502(3)\proj_dev\CADD\cavlryxss.dgn

NPS NO.	REG	STATE	PROJECT	SHEET NO.
304 / 41,920	SE	TN	TEA-21 SHIL 502(3)	M-8

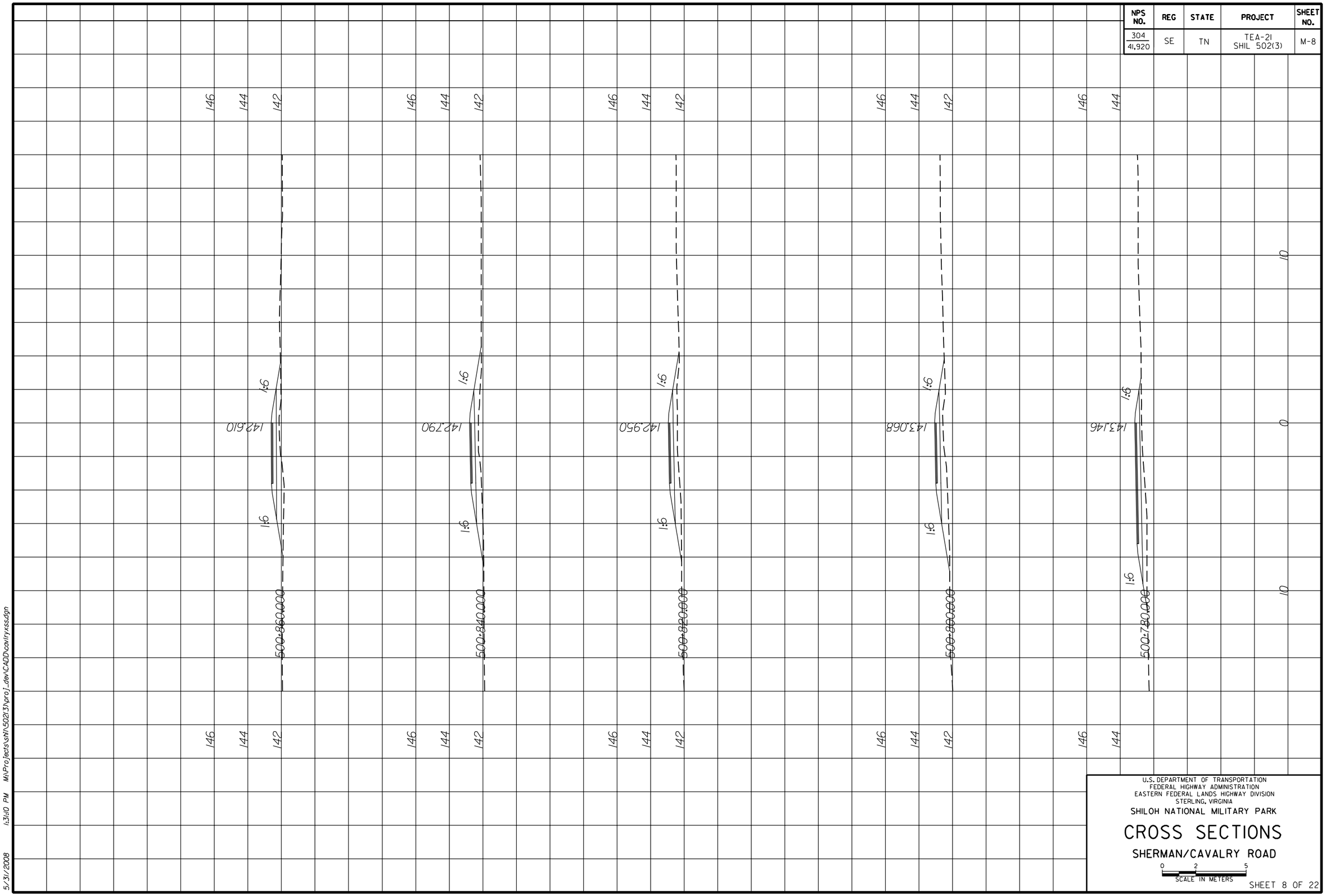

U.S. DEPARTMENT OF TRANSPORTATION
FEDERAL HIGHWAY ADMINISTRATION
EASTERN FEDERAL LANDS HIGHWAY DIVISION
STERLING, VIRGINIA

SHILOH NATIONAL MILITARY PARK

CROSS SECTIONS

SHERMAN/CAVALRY ROAD

0 2 5
SCALE IN METERS

SHEET 8 OF 22

5/31/2008 1:31:10 PM M:\Projects\shil\502(3)\proj_dev\CADD\civil\rysscdgn

NPS NO.	REG	STATE	PROJECT	SHEET NO.
304 / 41,920	SE	TN	TEA-21 SHIL 502(3)	M-9

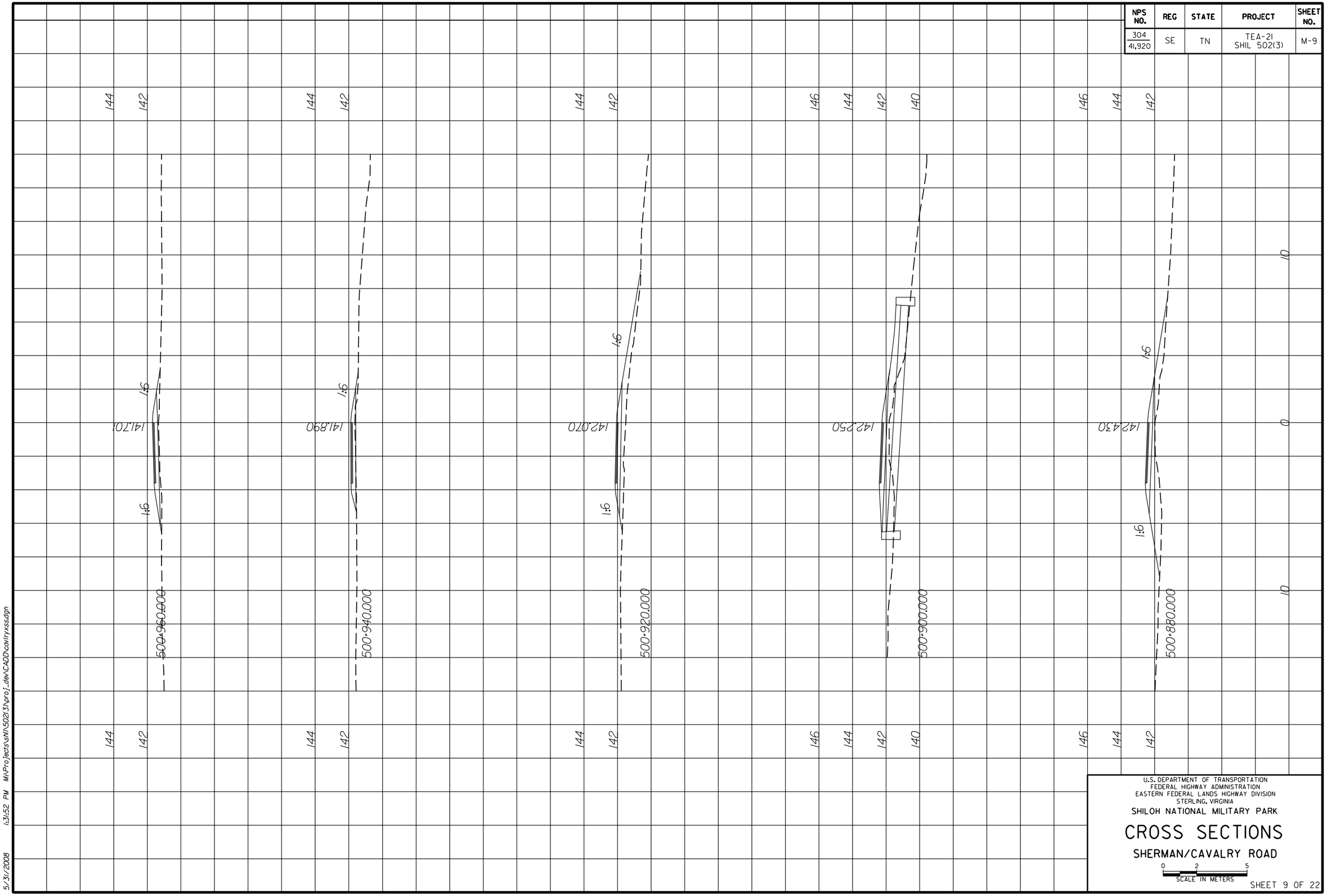

U.S. DEPARTMENT OF TRANSPORTATION
FEDERAL HIGHWAY ADMINISTRATION
EASTERN FEDERAL LANDS HIGHWAY DIVISION
STERLING, VIRGINIA

SHILOH NATIONAL MILITARY PARK

CROSS SECTIONS

SHERMAN/CAVALRY ROAD

0 2 5
SCALE IN METERS

SHEET 9 OF 22

5/31/2008 1:31:52 PM M:\Projects\sh\502(3)\proj_dev\CADD\cavlryxss.dgn

NPS NO.	REG	STATE	PROJECT	SHEET NO.
304 / 41,920	SE	TN	TEA-21 SHIL 502(3)	M-10

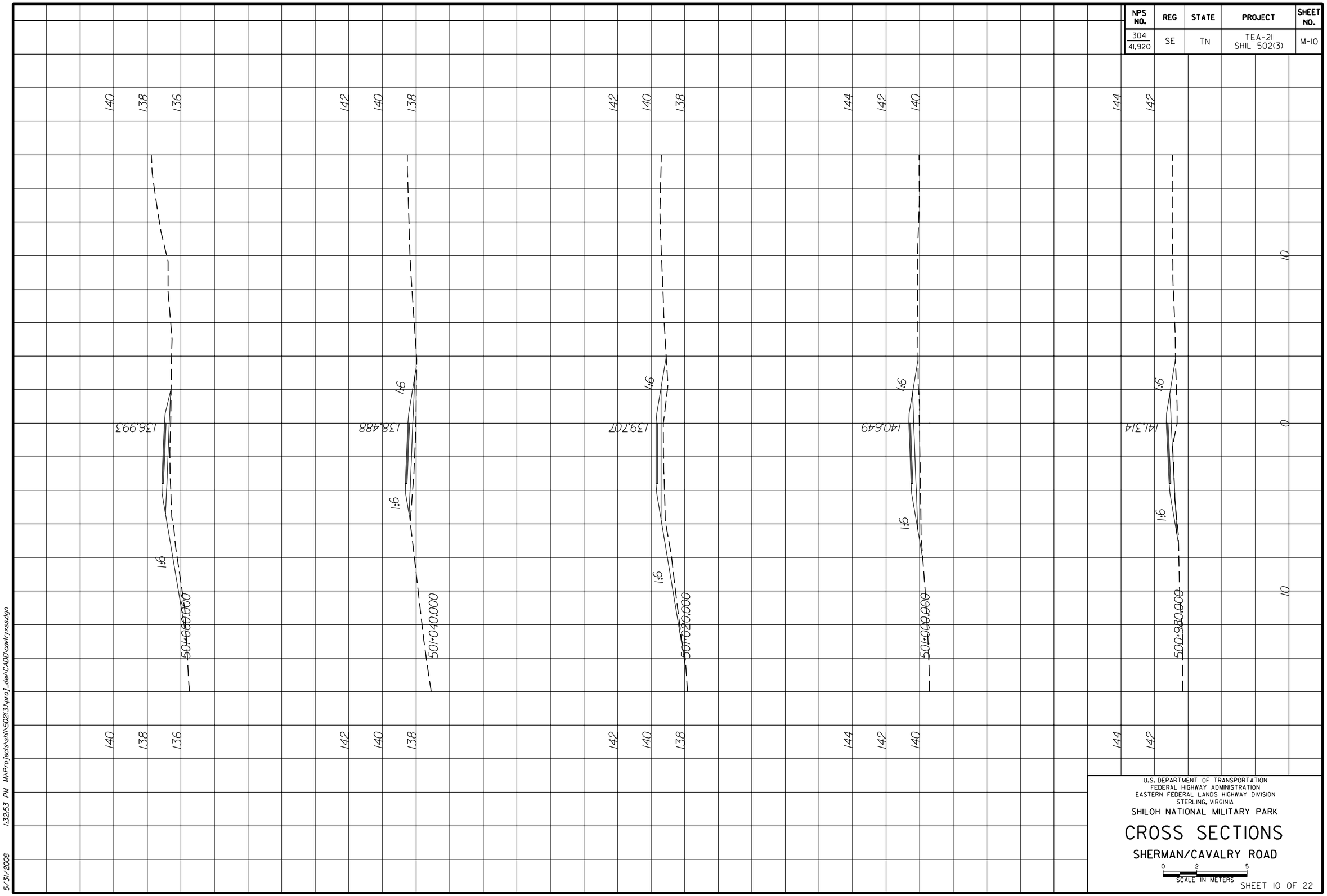

U.S. DEPARTMENT OF TRANSPORTATION
FEDERAL HIGHWAY ADMINISTRATION
EASTERN FEDERAL LANDS HIGHWAY DIVISION
STERLING, VIRGINIA

SHILOH NATIONAL MILITARY PARK

CROSS SECTIONS

SHERMAN/CAVALRY ROAD

0 2 5
SCALE IN METERS

SHEET 10 OF 22

5/31/2008 1:32:53 PM M:\Projects\sh\502(3)\proj_dev\CADD\cov\lryxsss.dgn

NPS NO.	REG	STATE	PROJECT	SHEET NO.
304 / 41,920	SE	TN	TEA-21 SHIL 502(3)	M-11

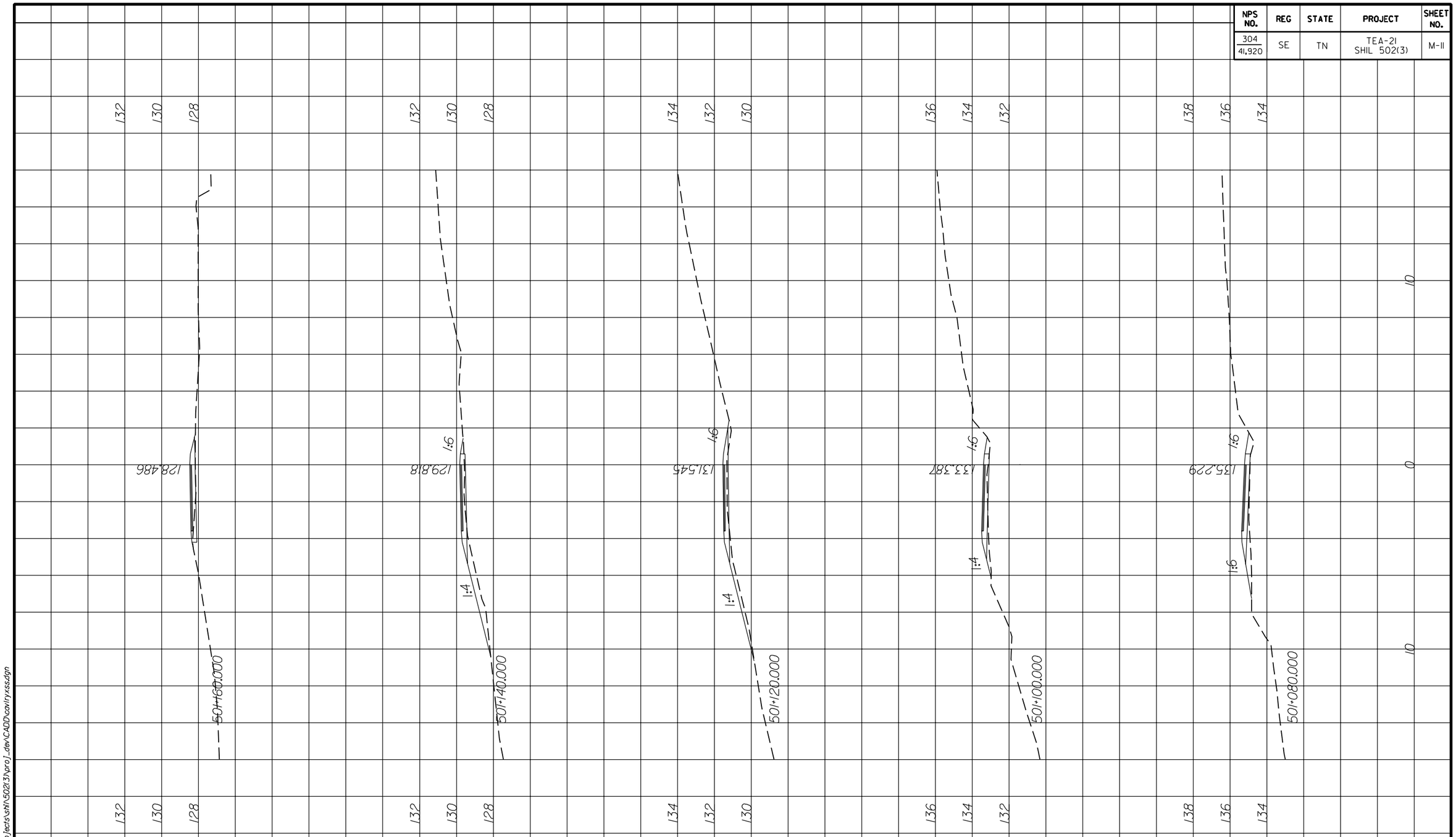

U.S. DEPARTMENT OF TRANSPORTATION
FEDERAL HIGHWAY ADMINISTRATION
EASTERN FEDERAL LANDS HIGHWAY DIVISION
STERLING, VIRGINIA

SHILOH NATIONAL MILITARY PARK

CROSS SECTIONS

SHERMAN/CAVALRY ROAD

0 2 5
SCALE IN METERS

SHEET 11 OF 22

5/31/2008 1:33:42 PM M:\Projects\shl\502(3)\proj_dev\CADD\cavlryxss.dgn

NPS NO.	REG	STATE	PROJECT	SHEET NO.
304 / 41,920	SE	TN	TEA-21 SHIL 502(3)	M-12

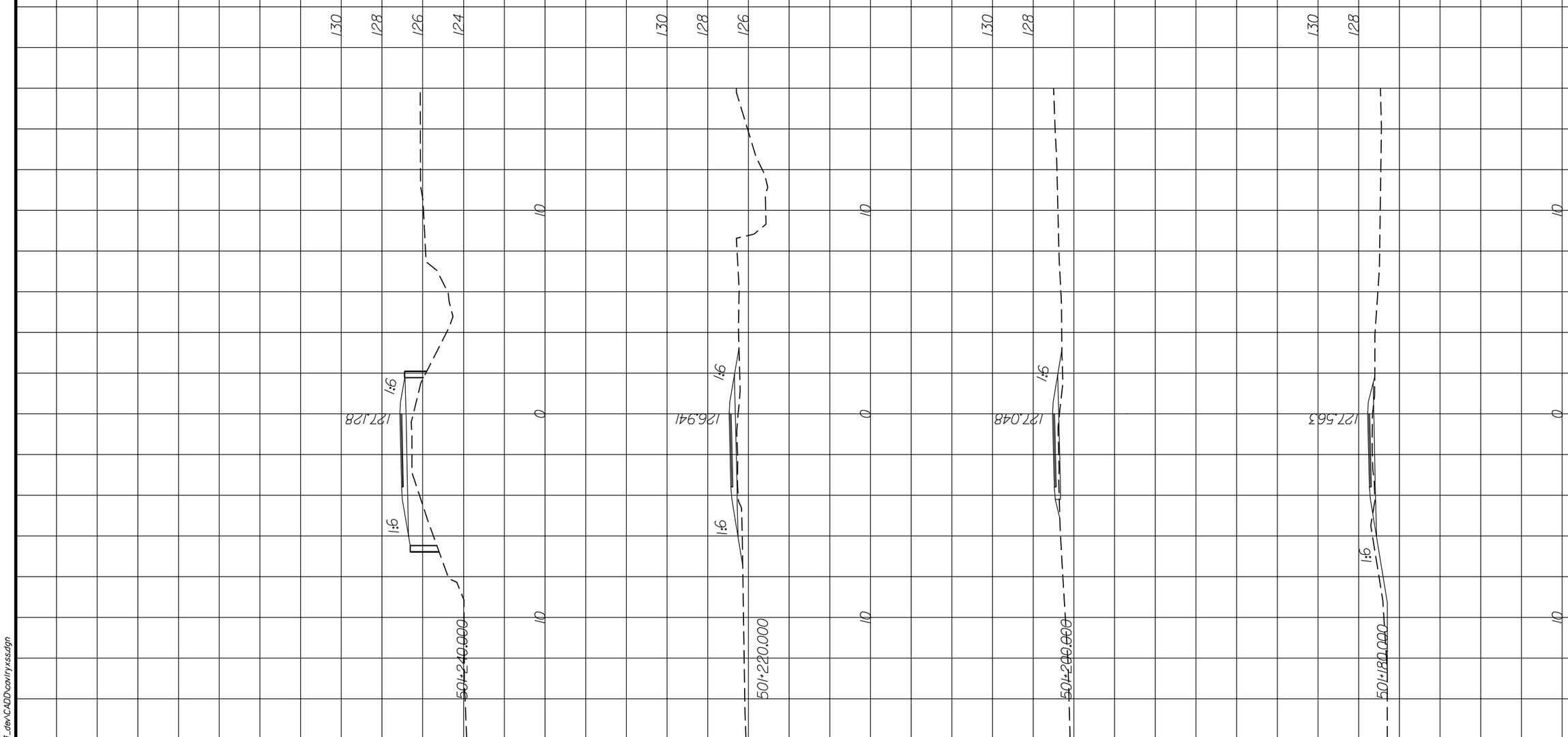

U.S. DEPARTMENT OF TRANSPORTATION
FEDERAL HIGHWAY ADMINISTRATION
EASTERN FEDERAL LANDS HIGHWAY DIVISION
STERLING, VIRGINIA

SHILOH NATIONAL MILITARY PARK

CROSS SECTIONS

SHERMAN/CAVALRY ROAD

0 2 5
SCALE IN METERS

SHEET 12 OF 22

5/31/2008 1:34:48 PM M:\Projects\sh\502(3)\proj_dev\CADD\cavlryxss.dgn

NPS NO.	REG	STATE	PROJECT	SHEET NO.
304 / 41,920	SE	TN	TEA-21 SHIL 502(3)	M-13

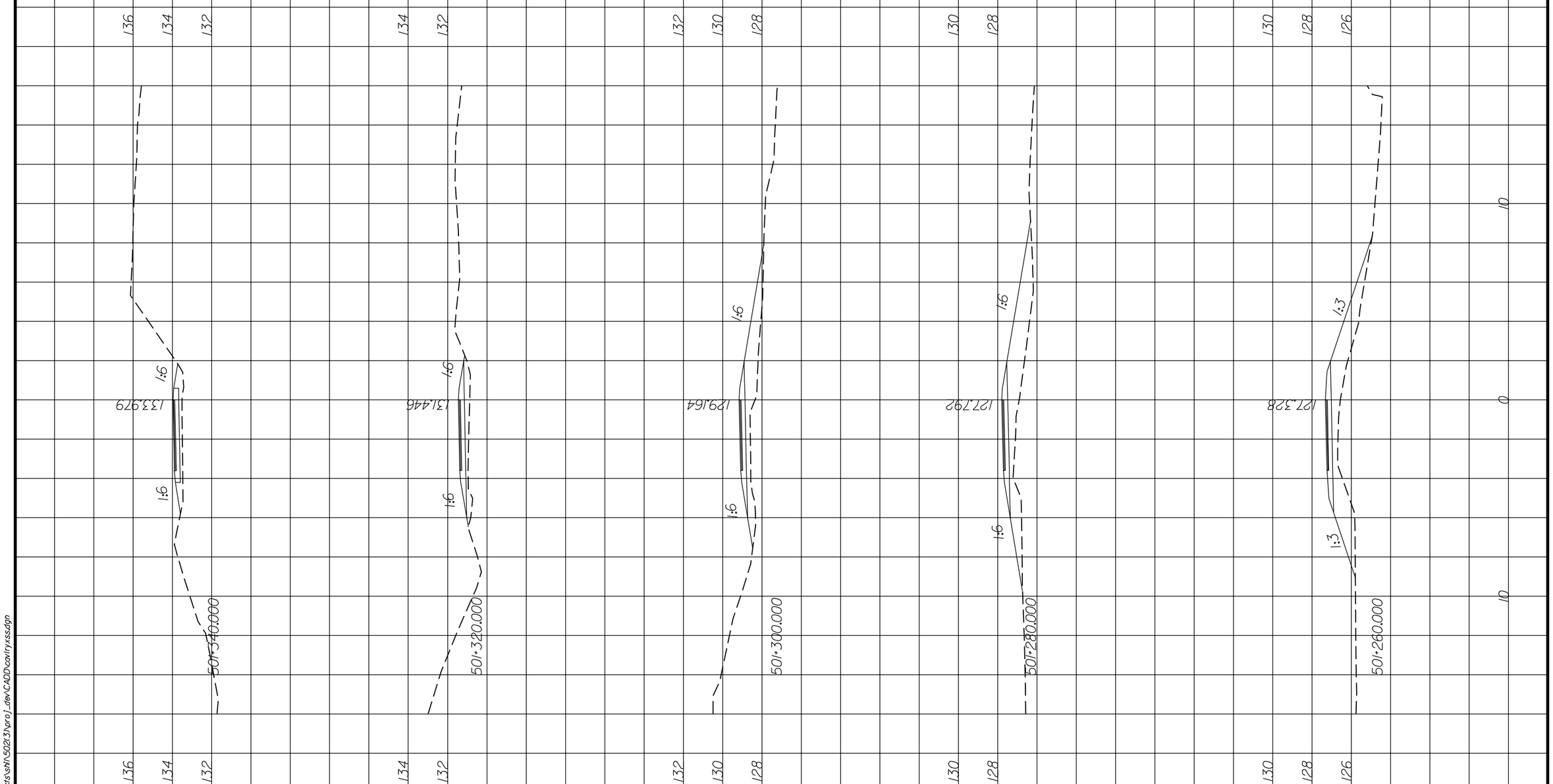

U.S. DEPARTMENT OF TRANSPORTATION
FEDERAL HIGHWAY ADMINISTRATION
EASTERN FEDERAL LANDS HIGHWAY DIVISION
STERLING, VIRGINIA

SHILOH NATIONAL MILITARY PARK

CROSS SECTIONS

SHERMAN/CAVALRY ROAD

0 2 5
SCALE IN METERS

SHEET 13 OF 22

5/31/2008 1:35:33 PM M:\Projects\sh\502(3)\proj_dev\CADD\cavlryxss.dgn

NPS NO.	REG	STATE	PROJECT	SHEET NO.
304 / 41,920	SE	TN	TEA-21 SHIL 502(3)	M-14

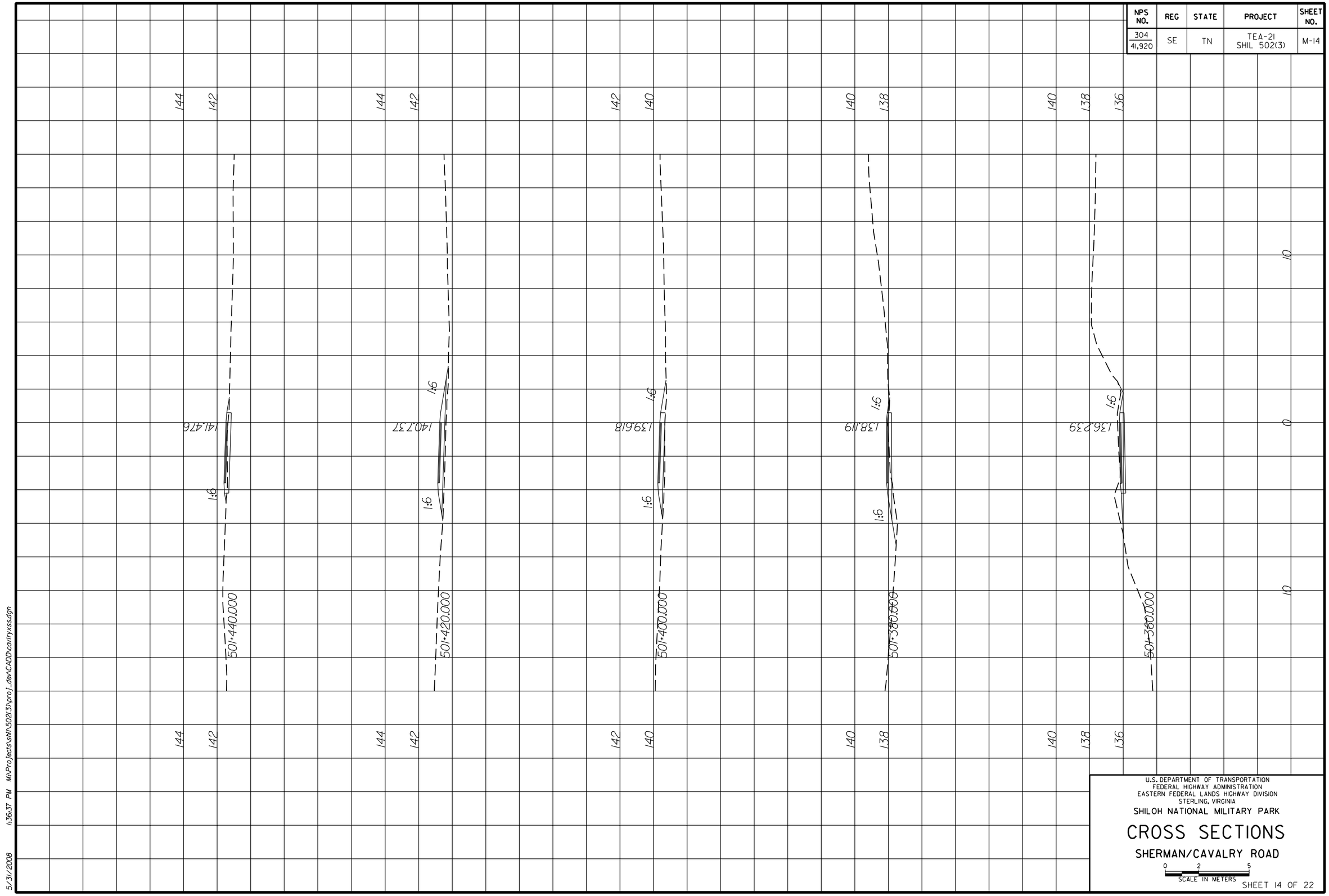

U.S. DEPARTMENT OF TRANSPORTATION
FEDERAL HIGHWAY ADMINISTRATION
EASTERN FEDERAL LANDS HIGHWAY DIVISION
STERLING, VIRGINIA

SHILOH NATIONAL MILITARY PARK

CROSS SECTIONS

SHERMAN/CAVALRY ROAD

0 2 5
SCALE IN METERS

SHEET 14 OF 22

5/31/2008 1:36:37 PM M:\Projects\sh\502(3)\proj_dev\CADD\cavlryxss.dgn

NPS NO.	REG	STATE	PROJECT	SHEET NO.
304 / 41,920	SE	TN	TEA-21 SHIL 502(3)	M-15

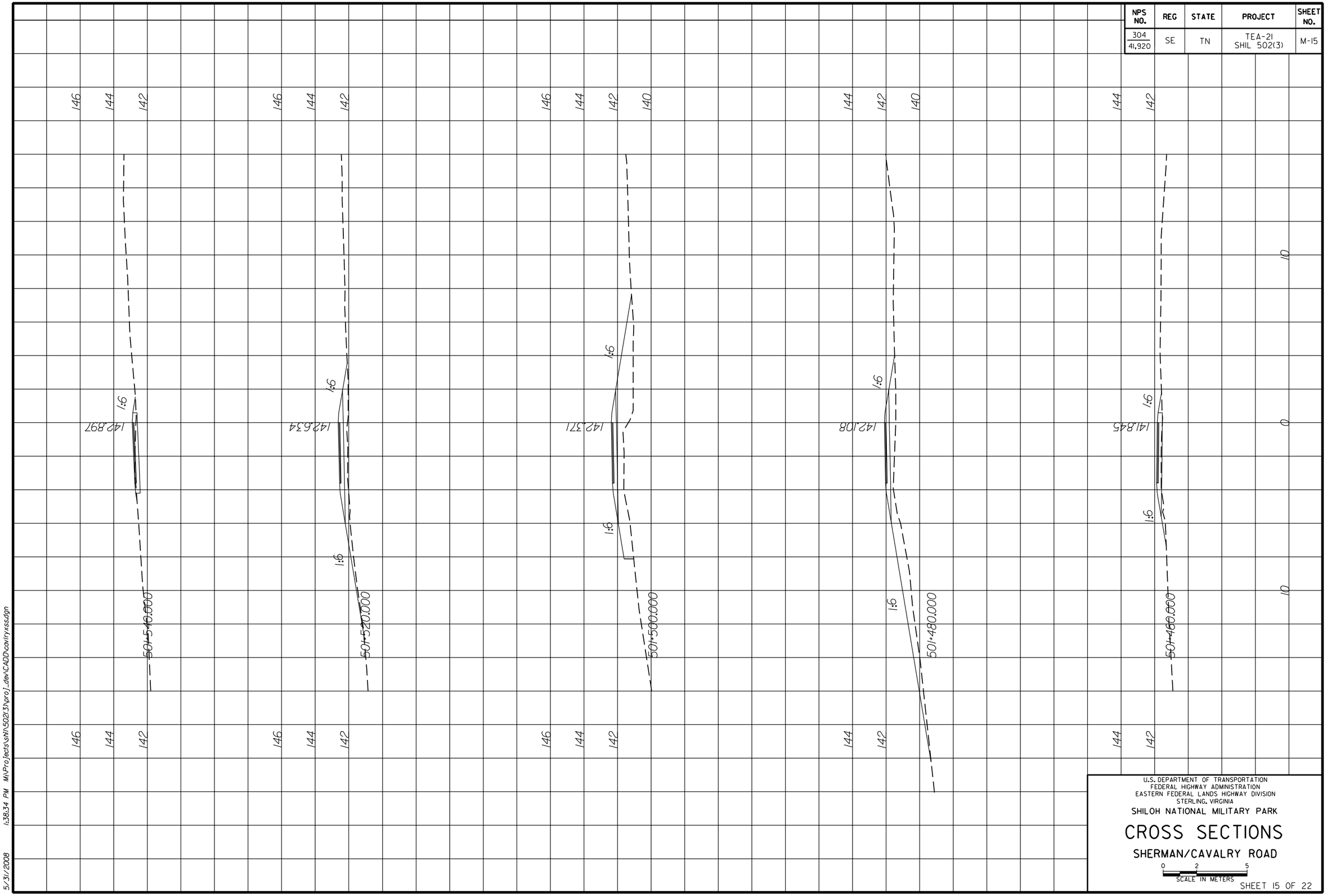

U.S. DEPARTMENT OF TRANSPORTATION
FEDERAL HIGHWAY ADMINISTRATION
EASTERN FEDERAL LANDS HIGHWAY DIVISION
STERLING, VIRGINIA

SHILOH NATIONAL MILITARY PARK

CROSS SECTIONS

SHERMAN/CAVALRY ROAD

0 2 5
SCALE IN METERS

SHEET 15 OF 22

5/31/2008 1:38:34 PM M:\Projects\sh\502(3)\proj_dev\CADD\cavlryxss.dgn

NPS NO.	REG	STATE	PROJECT	SHEET NO.
304 / 41,920	SE	TN	TEA-21 SHIL 502(3)	M-16

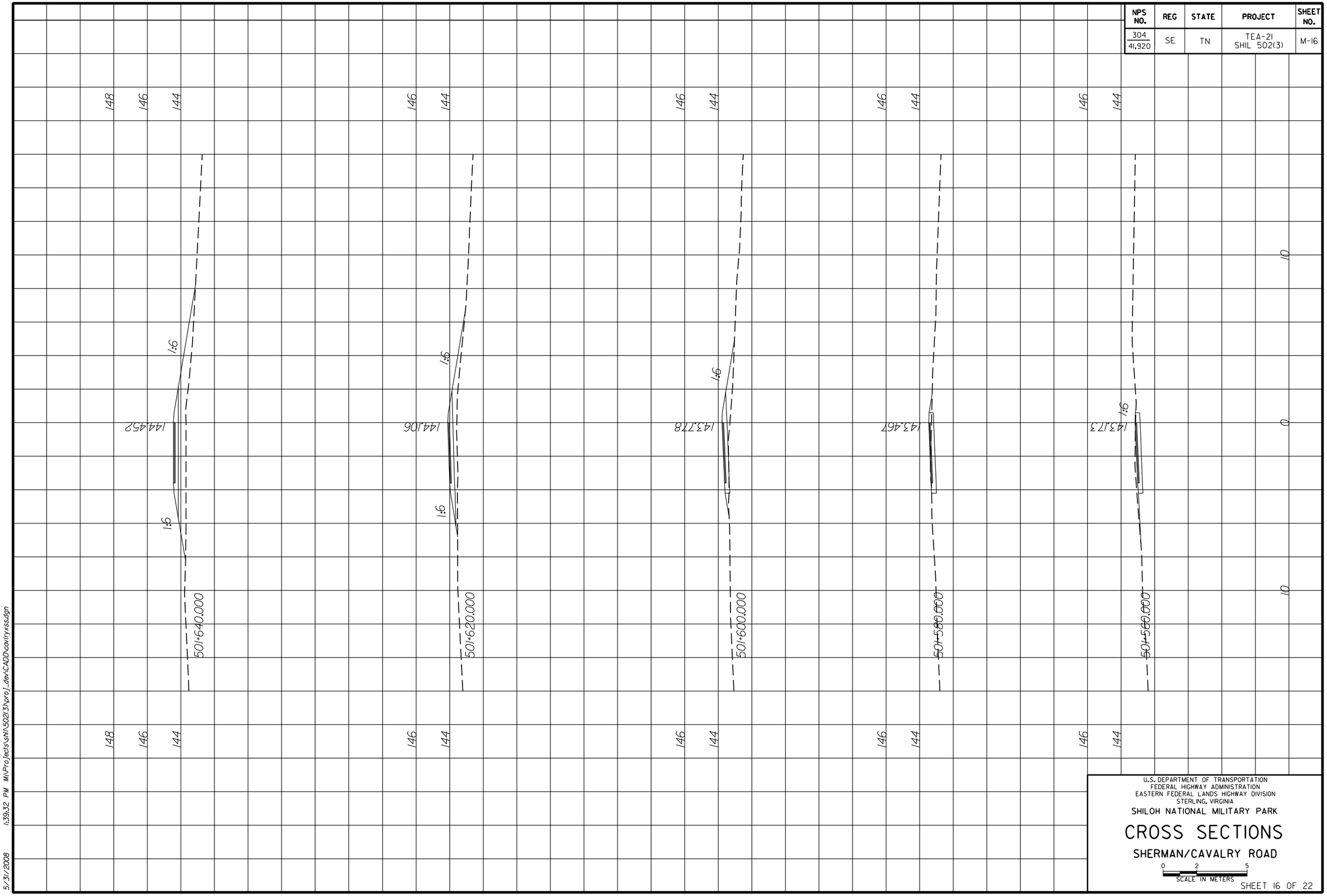

U.S. DEPARTMENT OF TRANSPORTATION
FEDERAL HIGHWAY ADMINISTRATION
EASTERN FEDERAL LANDS HIGHWAY DIVISION
STERLING, VIRGINIA

SHILOH NATIONAL MILITARY PARK

CROSS SECTIONS

SHERMAN/CAVALRY ROAD

0 2 5
SCALE IN METERS

SHEET 16 OF 22

5/31/2008 1:39:32 PM M:\Projects\sh\502(3)\proj_dev\CADD\cavlryxss.dgn

NPS NO.	REG	STATE	PROJECT	SHEET NO.
304 / 41,920	SE	TN	TEA-21 SHIL 502(3)	M-17

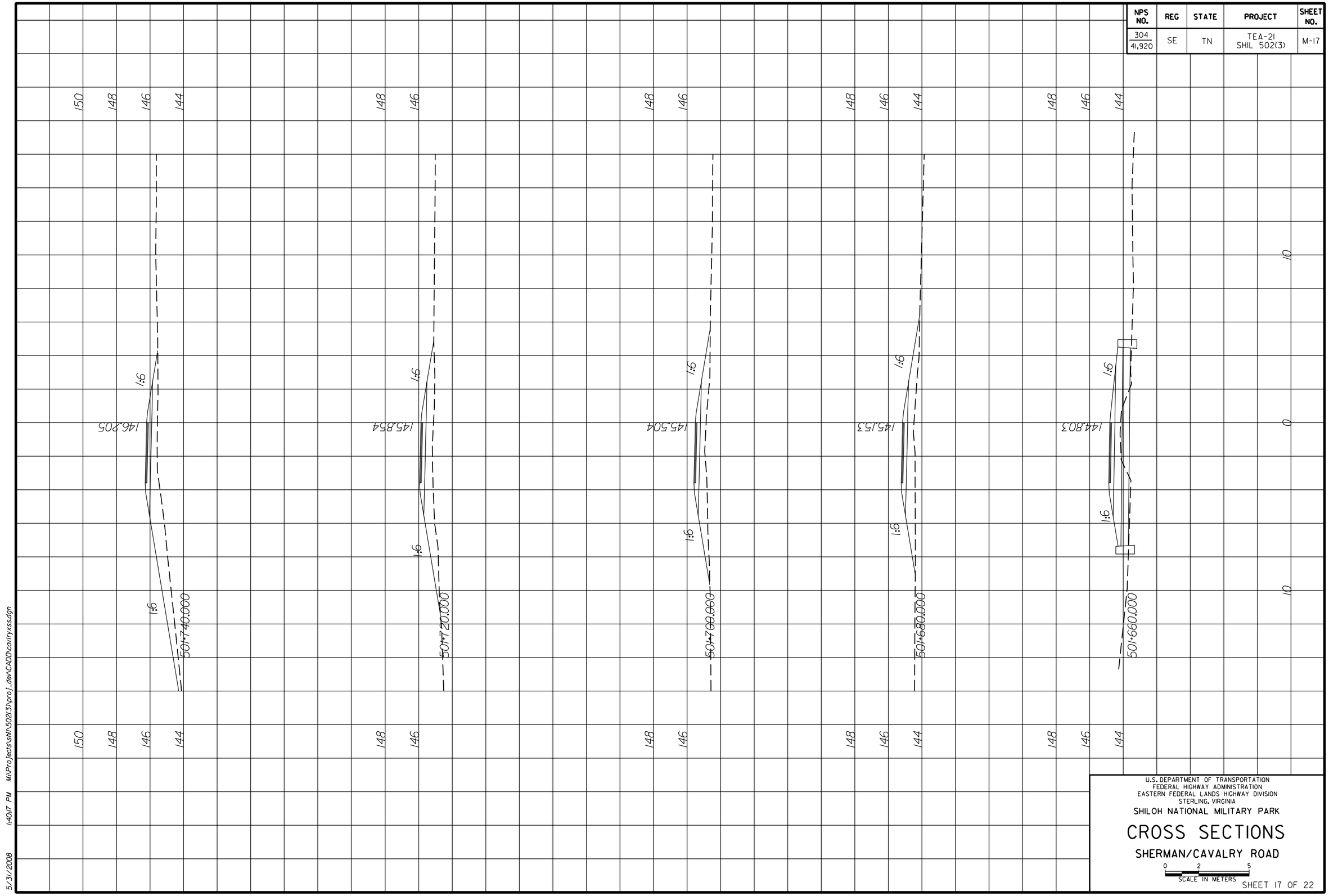

U.S. DEPARTMENT OF TRANSPORTATION
FEDERAL HIGHWAY ADMINISTRATION
EASTERN FEDERAL LANDS HIGHWAY DIVISION
STERLING, VIRGINIA

SHILOH NATIONAL MILITARY PARK

CROSS SECTIONS

SHERMAN/CAVALRY ROAD

0 2 5
SCALE IN METERS

SHEET 17 OF 22

5/31/2008 1:40:17 PM M:\Projects\sh\502(3)\proj_dev\CADD\cavlryxss.dgn

NPS NO.	REG	STATE	PROJECT	SHEET NO.
304 / 41,920	SE	TN	TEA-21 SHIL 502(3)	M-18

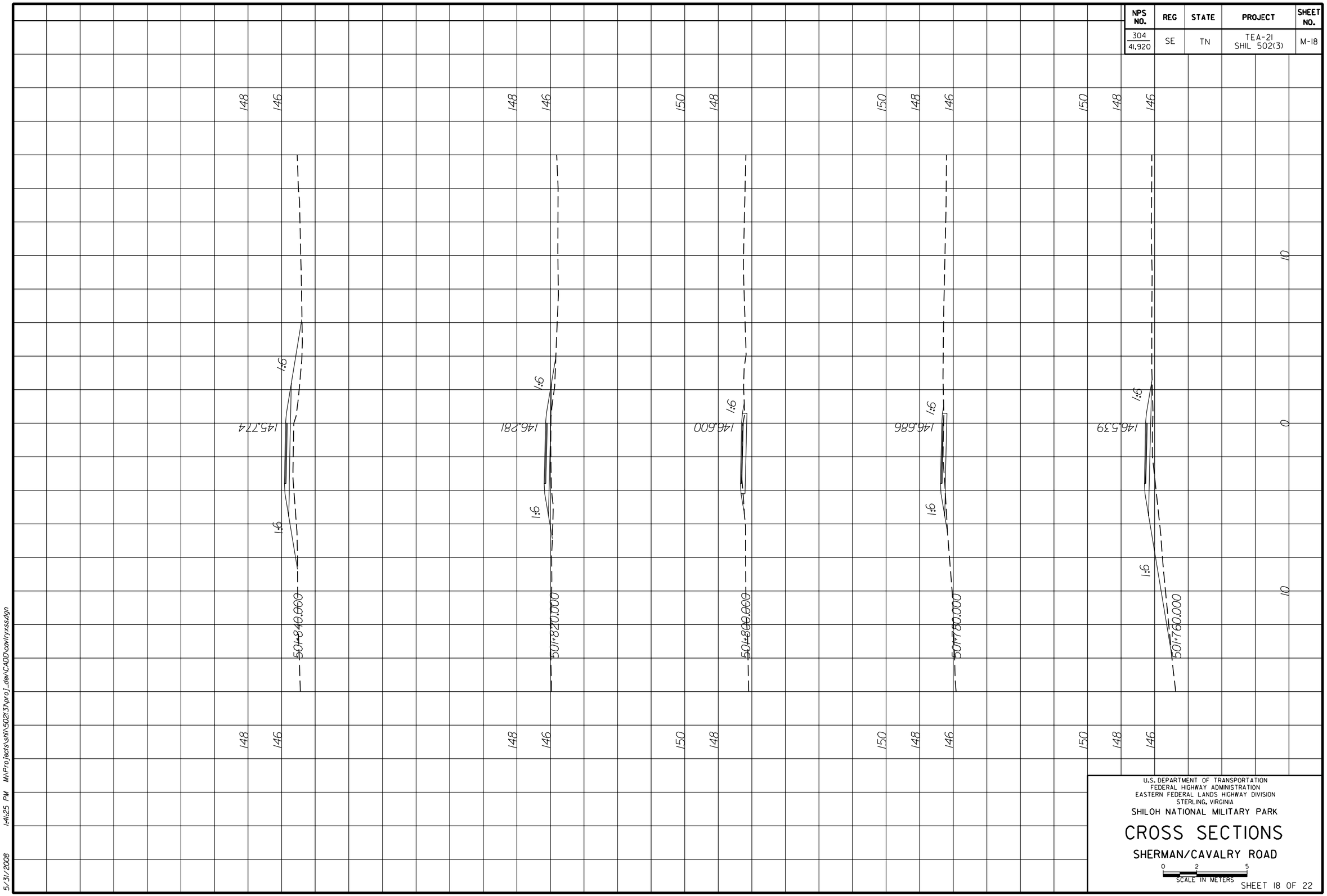

U.S. DEPARTMENT OF TRANSPORTATION
FEDERAL HIGHWAY ADMINISTRATION
EASTERN FEDERAL LANDS HIGHWAY DIVISION
STERLING, VIRGINIA

SHILOH NATIONAL MILITARY PARK

CROSS SECTIONS

SHERMAN/CAVALRY ROAD

0 2 5
SCALE IN METERS

SHEET 18 OF 22

5/31/2008 1:41:25 PM M:\Projects\shl\502(3)\proj_dev\CADD\cov\lryxss.dgn

NPS NO.	REG	STATE	PROJECT	SHEET NO.
304 / 41,920	SE	TN	TEA-21 SHIL 502(3)	M-19

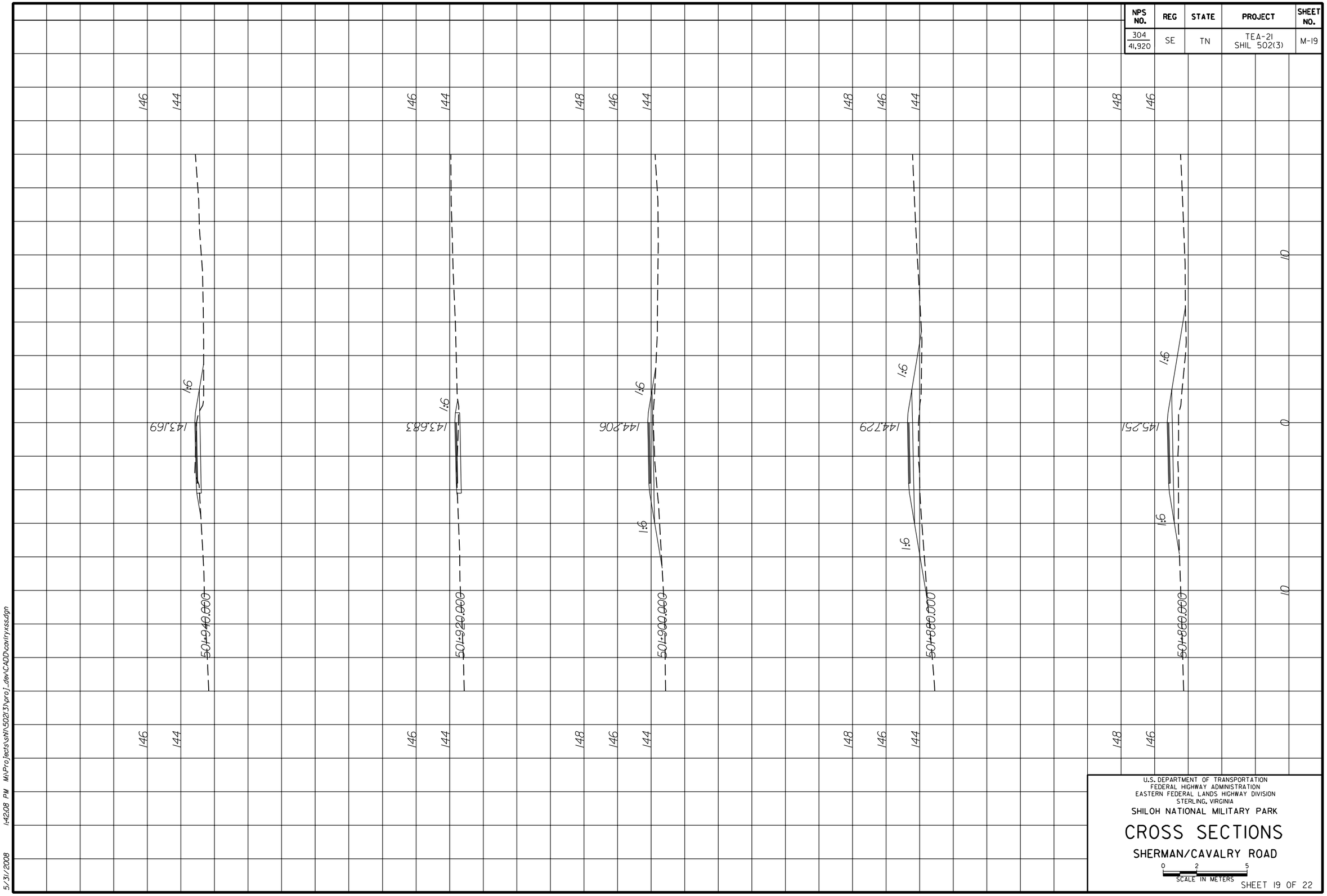

U.S. DEPARTMENT OF TRANSPORTATION
FEDERAL HIGHWAY ADMINISTRATION
EASTERN FEDERAL LANDS HIGHWAY DIVISION
STERLING, VIRGINIA

SHILOH NATIONAL MILITARY PARK

CROSS SECTIONS

SHERMAN/CAVALRY ROAD

0 2 5
SCALE IN METERS

SHEET 19 OF 22

5/31/2008 1:42:08 PM M:\Projects\sh\502(3)\proj_dev\CADD\cavlryxss.dgn

NPS NO.	REG	STATE	PROJECT	SHEET NO.
304 / 41,920	SE	TN	TEA-21 SHIL 502(3)	M-20

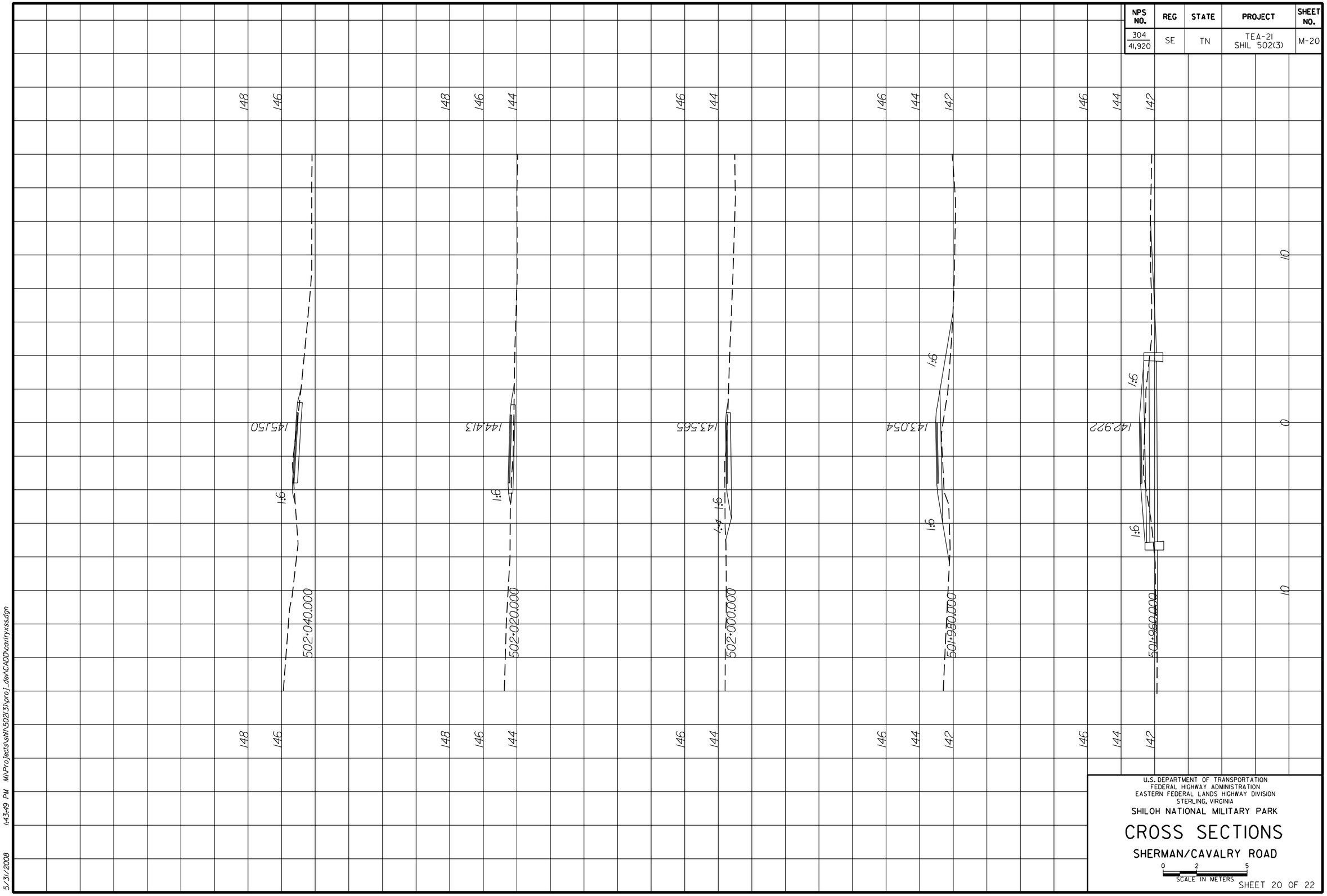

U.S. DEPARTMENT OF TRANSPORTATION
FEDERAL HIGHWAY ADMINISTRATION
EASTERN FEDERAL LANDS HIGHWAY DIVISION
STERLING, VIRGINIA

SHILOH NATIONAL MILITARY PARK

CROSS SECTIONS

SHERMAN/CAVALRY ROAD

0 2 5
SCALE IN METERS

SHEET 20 OF 22

5/31/2008 1:43:49 PM M:\Projects\sh\502(3)\proj_dev\CADD\cavlryxss.dgn

NPS NO.	REG	STATE	PROJECT	SHEET NO.
304 / 41,920	SE	TN	TEA-21 SHIL 502(3)	M-21

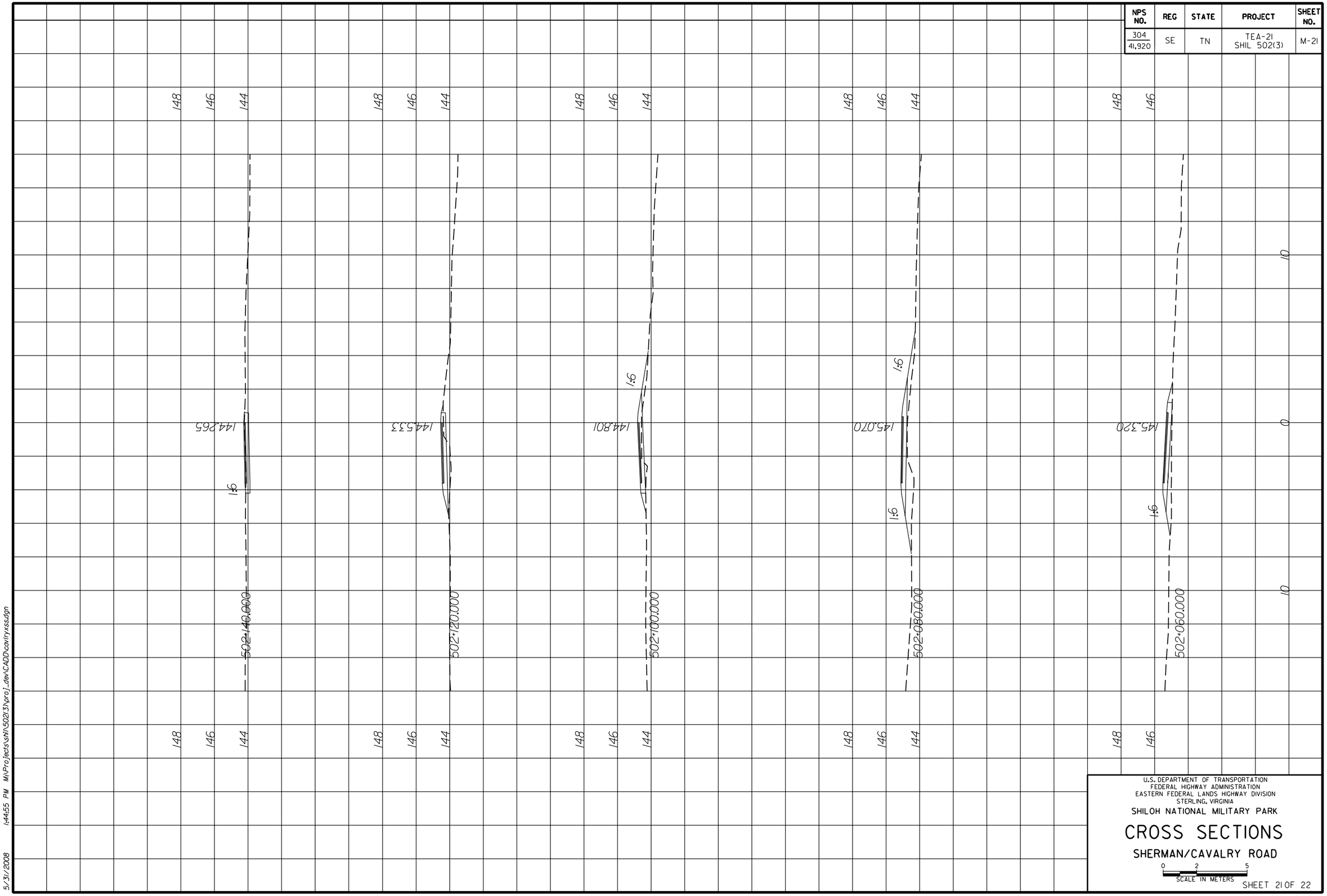

U.S. DEPARTMENT OF TRANSPORTATION
FEDERAL HIGHWAY ADMINISTRATION
EASTERN FEDERAL LANDS HIGHWAY DIVISION
STERLING, VIRGINIA

SHILOH NATIONAL MILITARY PARK

CROSS SECTIONS

SHERMAN/CAVALRY ROAD

0 2 5
SCALE IN METERS

SHEET 21 OF 22

5/31/2008 1:44:55 PM M:\Projects\sh\502(3)\proj_dev\CADD\cavlryxss.dgn

NPS NO.	REG	STATE	PROJECT	SHEET NO.
304 / 41,920	SE	TN	TEA-21 SHIL 502(3)	M-22

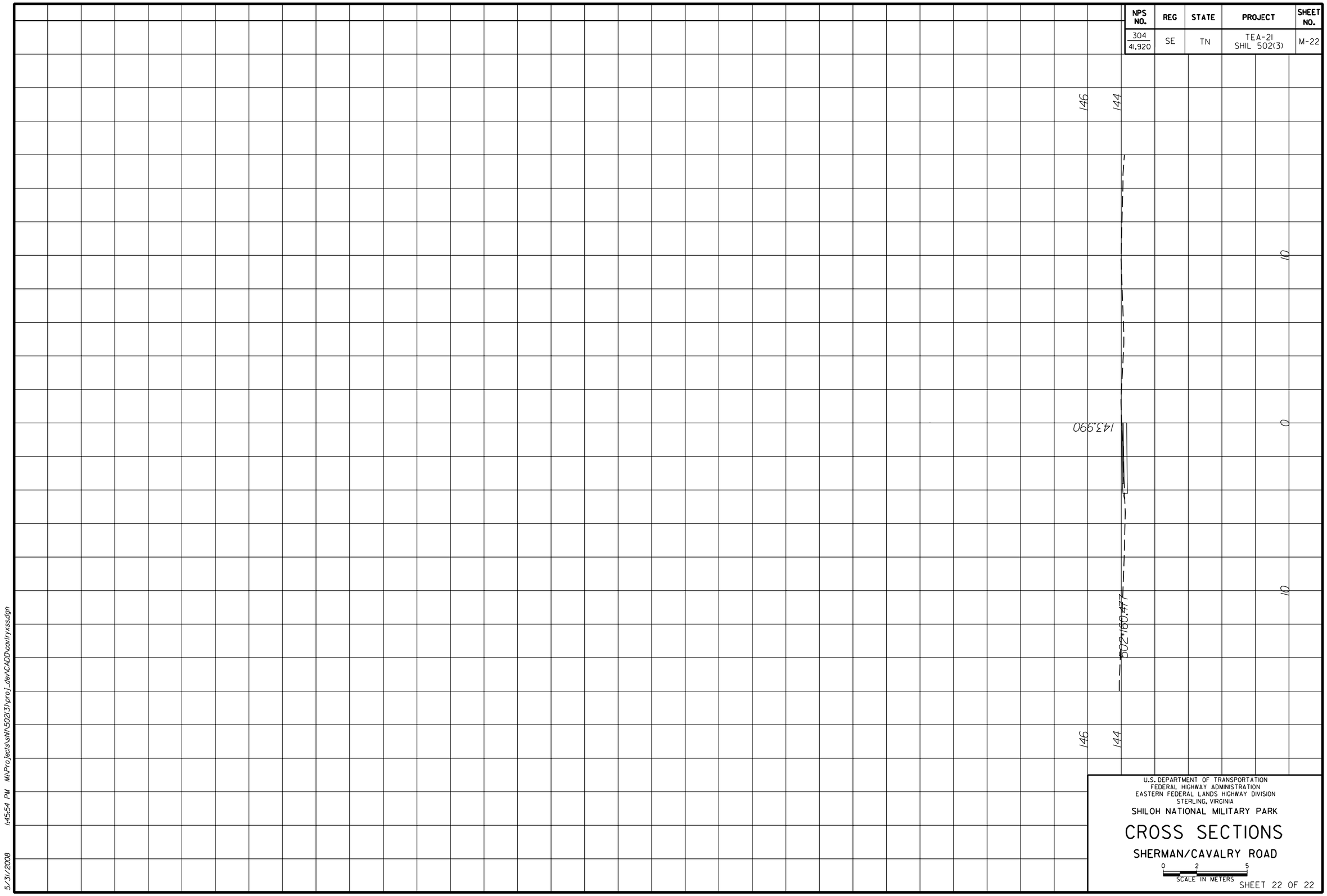

U.S. DEPARTMENT OF TRANSPORTATION
FEDERAL HIGHWAY ADMINISTRATION
EASTERN FEDERAL LANDS HIGHWAY DIVISION
STERLING, VIRGINIA

SHILOH NATIONAL MILITARY PARK

CROSS SECTIONS

SHERMAN/CAVALRY ROAD

0 2 5
SCALE IN METERS

SHEET 22 OF 22

5/31/2008 1:45:54 PM M:\Projects\shl\502(3)\proj_dev\CADD\coalryxss.dgn

NPS NO.	REG	STATE	PROJECT	SHEET NO.
304 / 41,920	SE	TN	TEA- 21 SHIL 502(3)	M-23

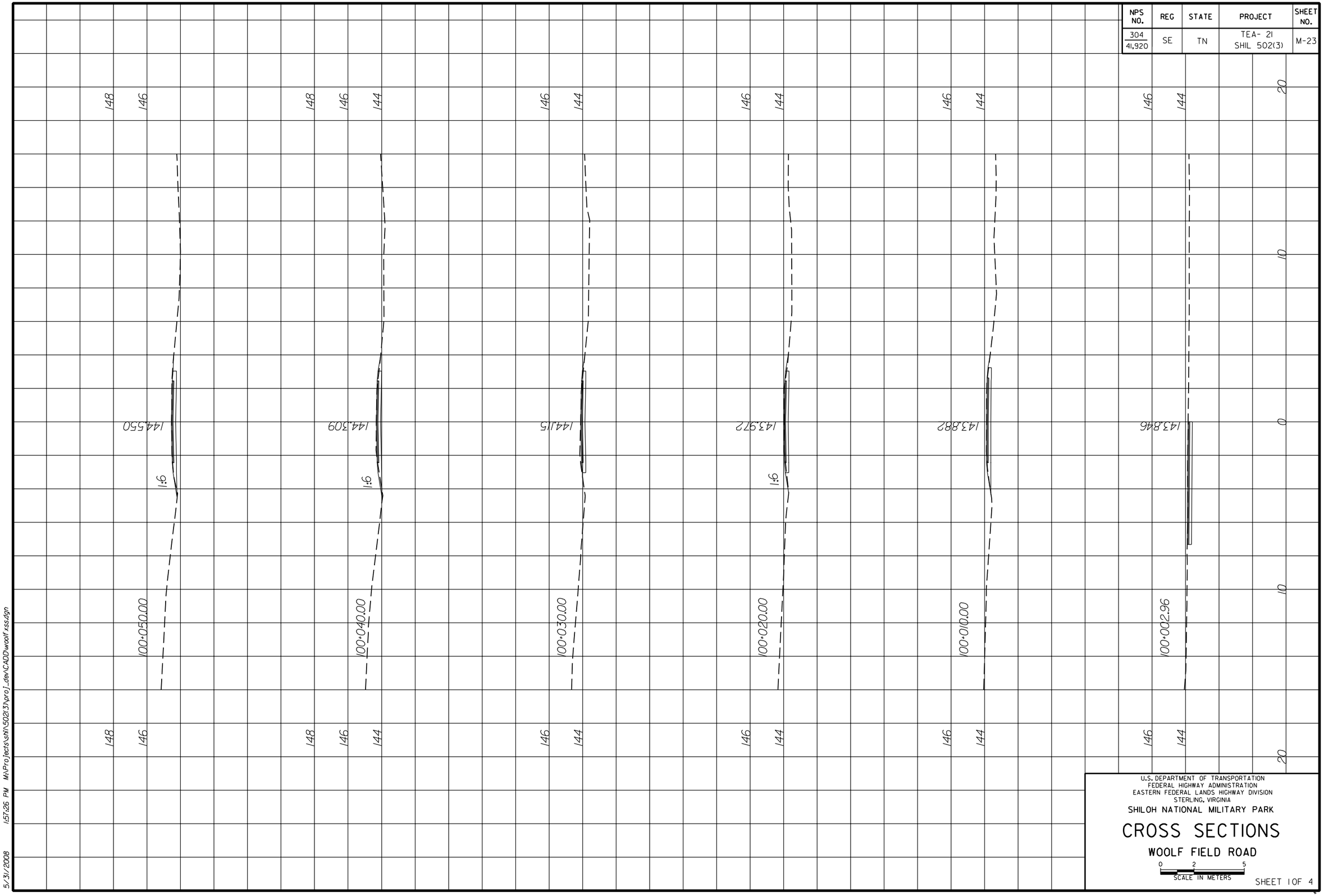

U.S. DEPARTMENT OF TRANSPORTATION
FEDERAL HIGHWAY ADMINISTRATION
EASTERN FEDERAL LANDS HIGHWAY DIVISION
STERLING, VIRGINIA

SHILOH NATIONAL MILITARY PARK

CROSS SECTIONS

WOOLF FIELD ROAD

0 2 5
SCALE IN METERS

SHEET 1 OF 4

5/31/2008 1:57:26 PM M:\Projects\shil\502(3)\proj_dev\CADD\woolf.xssdgn

NPS NO.	REG	STATE	PROJECT	SHEET NO.
304 / 41,920	SE	TN	TEA- 21 SHIL 502(3)	M-24

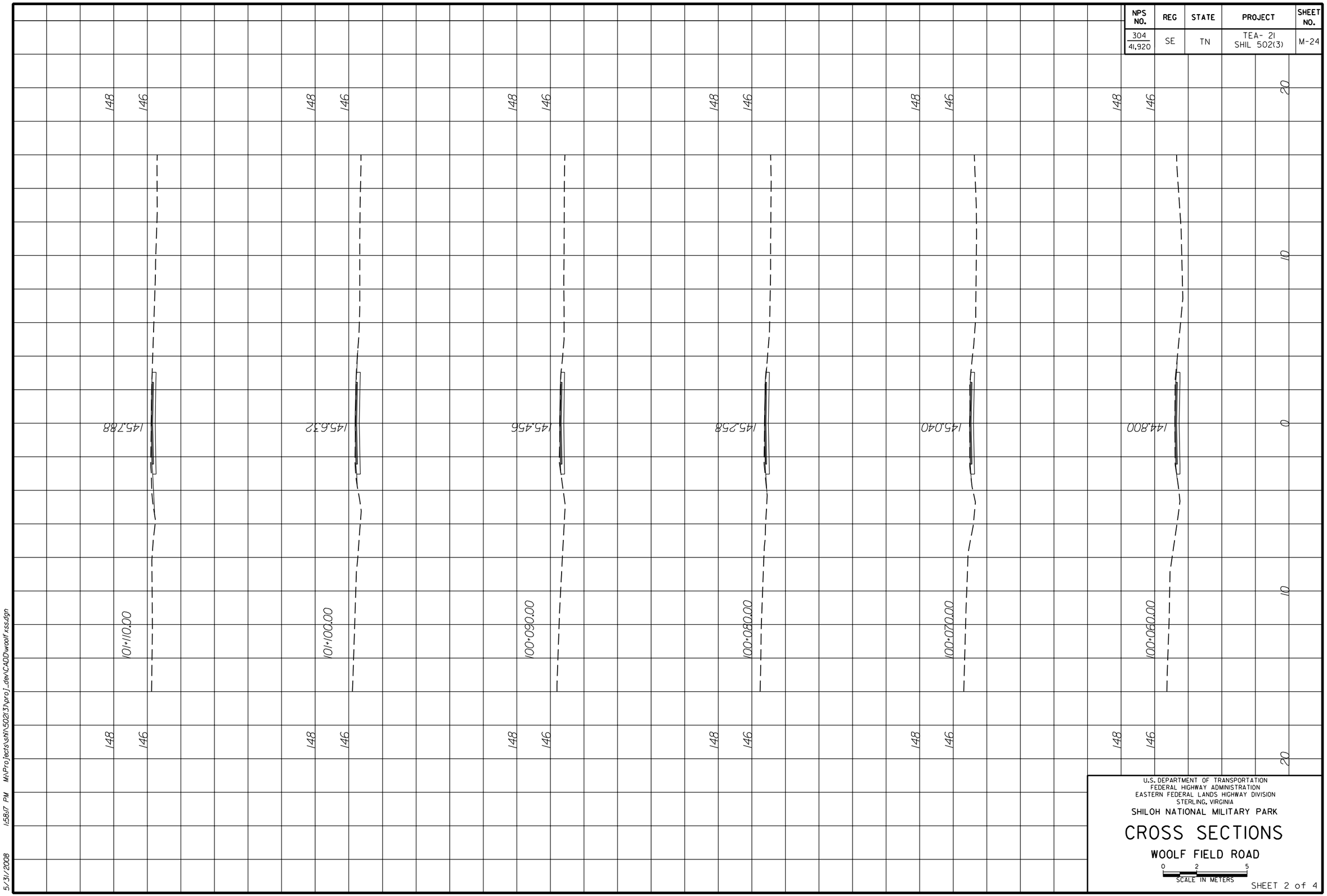

U.S. DEPARTMENT OF TRANSPORTATION
FEDERAL HIGHWAY ADMINISTRATION
EASTERN FEDERAL LANDS HIGHWAY DIVISION
STERLING, VIRGINIA

SHILOH NATIONAL MILITARY PARK

CROSS SECTIONS

WOOLF FIELD ROAD

0 2 5
SCALE IN METERS

SHEET 2 of 4

5/31/2008 1:58:17 PM M:\Projects\sh\502(3)\proj_dev\CADD\woolf-xss.dgn

NPS NO.	REG	STATE	PROJECT	SHEET NO.
304 / 41,920	SE	TN	TEA- 21 SHIL 502(3)	M-25

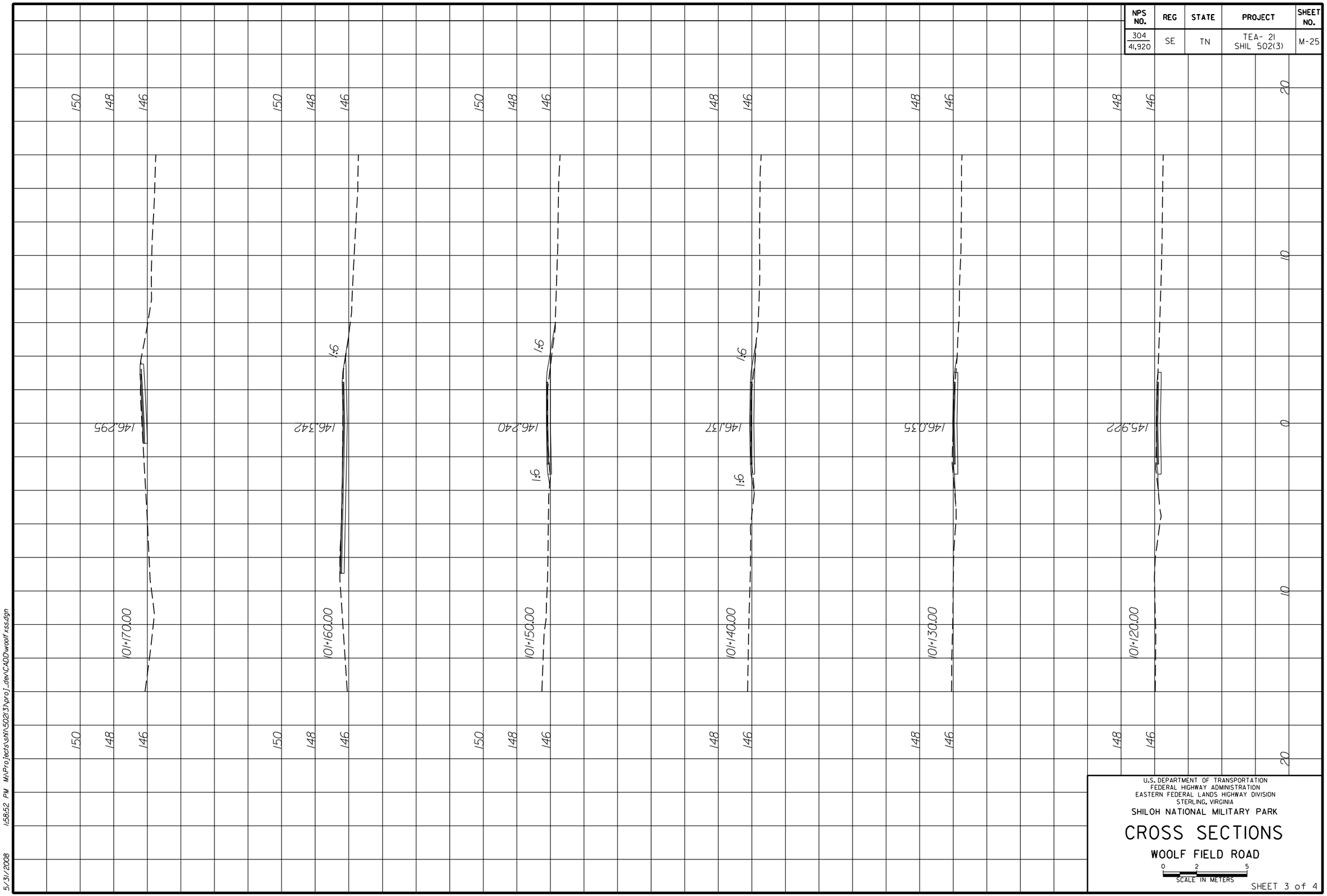

U.S. DEPARTMENT OF TRANSPORTATION
FEDERAL HIGHWAY ADMINISTRATION
EASTERN FEDERAL LANDS HIGHWAY DIVISION
STERLING, VIRGINIA

SHILOH NATIONAL MILITARY PARK

CROSS SECTIONS

WOOLF FIELD ROAD

0 2 5
SCALE IN METERS

SHEET 3 of 4

5/31/2008 1:58:52 PM M:\Projects\sth\502(3)\proj_dev\CADD\woolf xss.dgn

NPS NO.	REG	STATE	PROJECT	SHEET NO.
304 / 41,920	SE	TN	TEA- 21 SHIL 502(3)	M-26

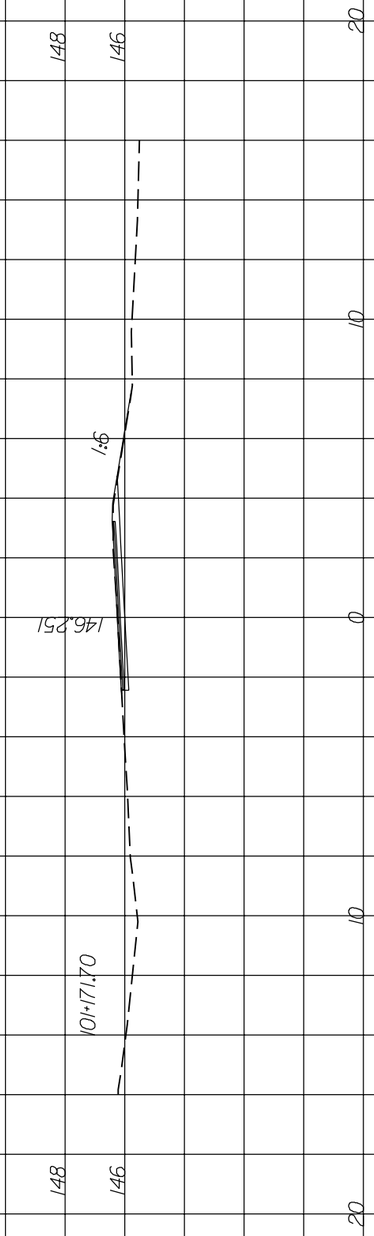

U.S. DEPARTMENT OF TRANSPORTATION
FEDERAL HIGHWAY ADMINISTRATION
EASTERN FEDERAL LANDS HIGHWAY DIVISION
STERLING, VIRGINIA

SHILOH NATIONAL MILITARY PARK

CROSS SECTIONS

WOOLF FIELD ROAD

0 2 5
SCALE IN METERS

SHEET 4 of 4

5/31/2008 1:59:41 PM M:\Projects\shl\502(3)\proj_dev\CADD\woolf xss.dgn

NPS NO.	REG	STATE	PROJECT	SHEET NO.
304 / 41,920	SE	TN	TEA-21 SHIL 502(3)	M-27

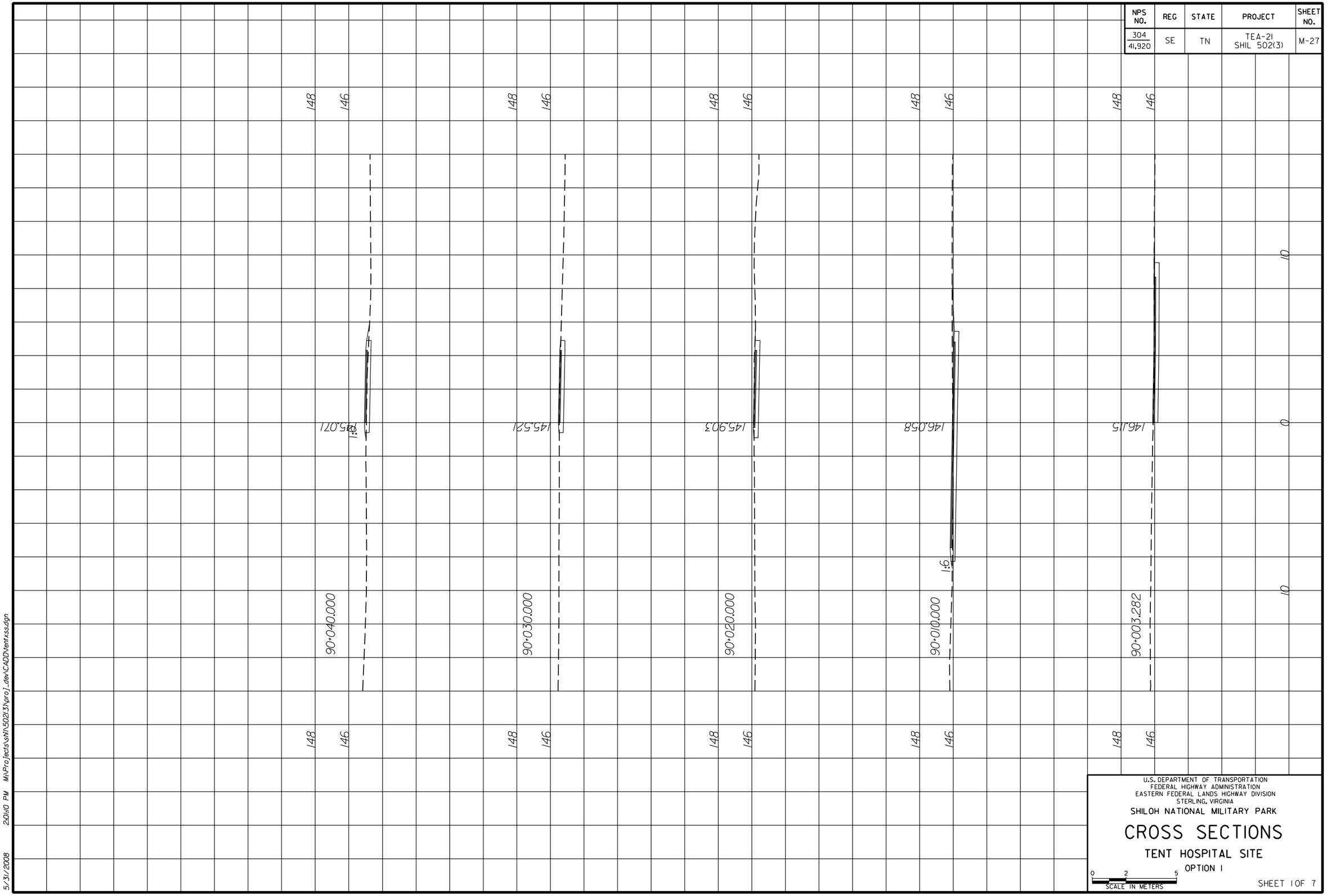

U.S. DEPARTMENT OF TRANSPORTATION
FEDERAL HIGHWAY ADMINISTRATION
EASTERN FEDERAL LANDS HIGHWAY DIVISION
STERLING, VIRGINIA

SHILOH NATIONAL MILITARY PARK

CROSS SECTIONS

TENT HOSPITAL SITE

OPTION 1

0 2 5
SCALE IN METERS

SHEET 10F 7

5/31/2008 2:01:10 PM M:\Projects\shil\502(3)\proj_dev\CADD\tentxss.dgn

NPS NO.	REG	STATE	PROJECT	SHEET NO.
304 / 41,920	SE	TN	TEA-21-SHIL 502(3)	M-28

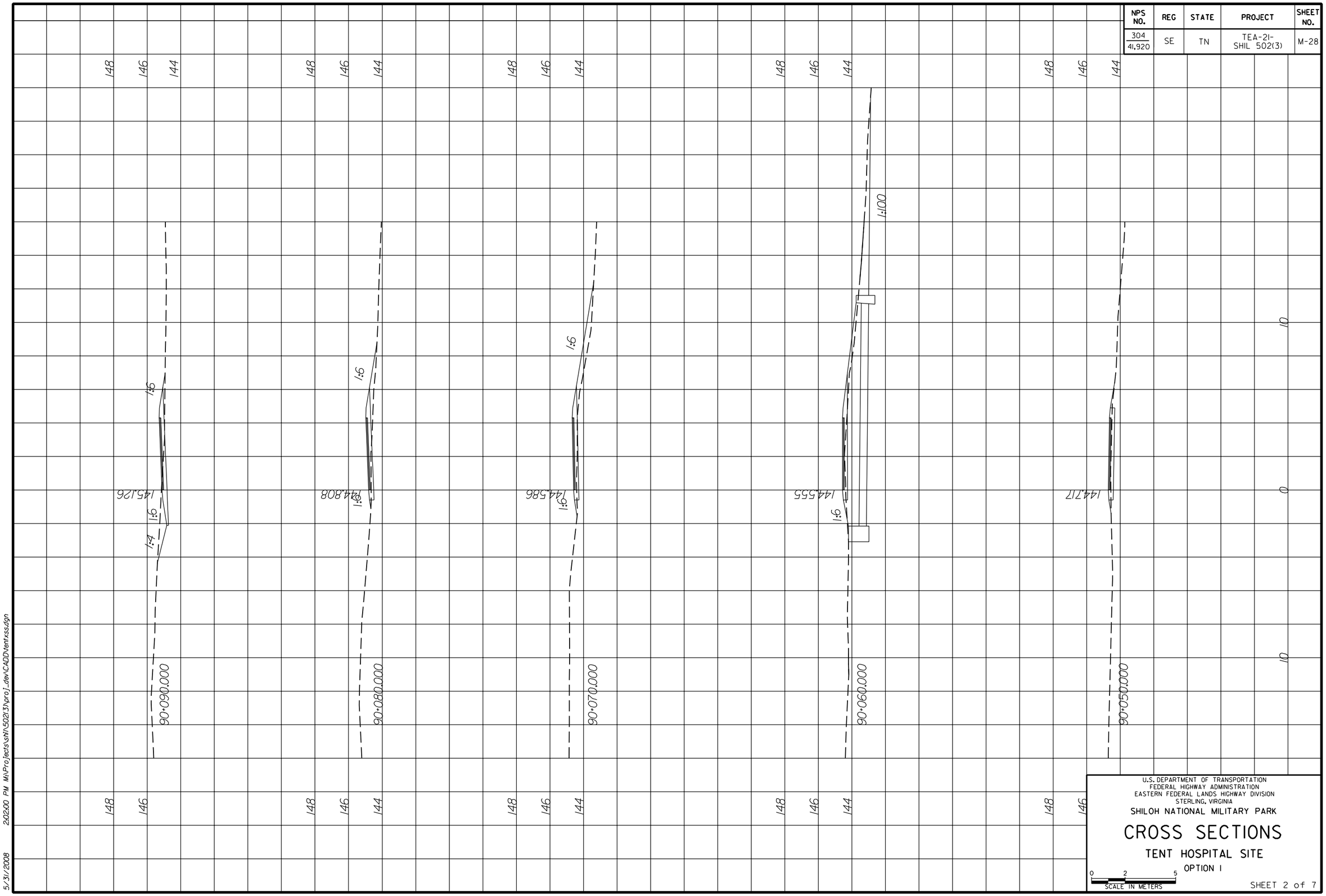

U.S. DEPARTMENT OF TRANSPORTATION
FEDERAL HIGHWAY ADMINISTRATION
EASTERN FEDERAL LANDS HIGHWAY DIVISION
STERLING, VIRGINIA

SHILOH NATIONAL MILITARY PARK

CROSS SECTIONS

TENT HOSPITAL SITE

OPTION 1

0 2 5
SCALE IN METERS

SHEET 2 of 7

5/31/2008 2:02:00 PM M:\Projects\shl\502(3)\proj_dev\CADD\tentxss.dgn

NPS NO.	REG	STATE	PROJECT	SHEET NO.
304 / 41,920	SE	TN	TEA-21 SHIL 502(3)	M-29

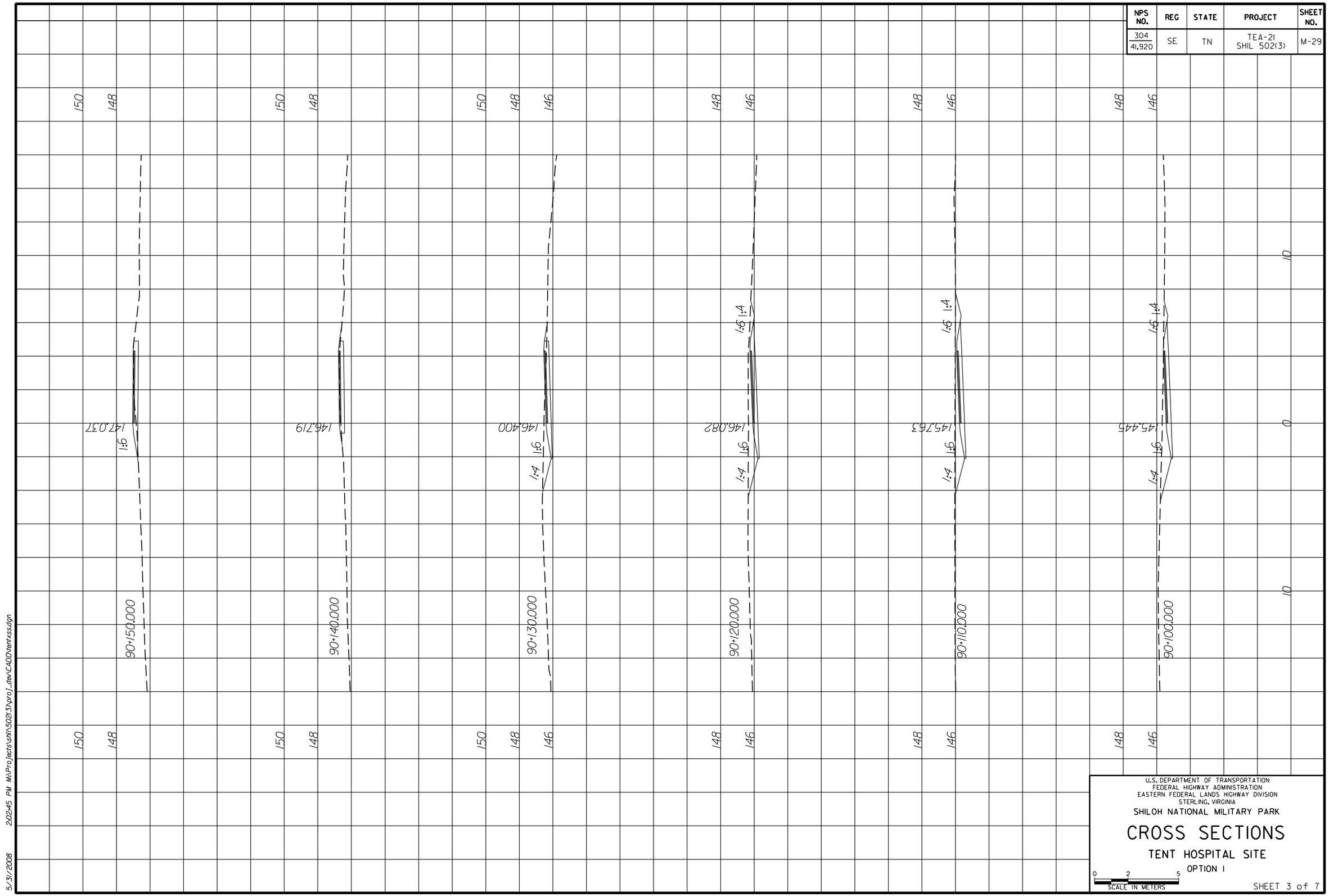

U.S. DEPARTMENT OF TRANSPORTATION
FEDERAL HIGHWAY ADMINISTRATION
EASTERN FEDERAL LANDS HIGHWAY DIVISION
STERLING, VIRGINIA

SHILOH NATIONAL MILITARY PARK

CROSS SECTIONS

TENT HOSPITAL SITE

OPTION I

0 2 5
SCALE IN METERS

SHEET 3 of 7

5/31/2008 2:02:45 PM M:\Projects\sh\502(3)\proj_dev\CADD\tentxss.dgn

NPS NO.	REG	STATE	PROJECT	SHEET NO.
304 / 41,920	SE	TN	TEA-21 SHIL 502(3)	M-30

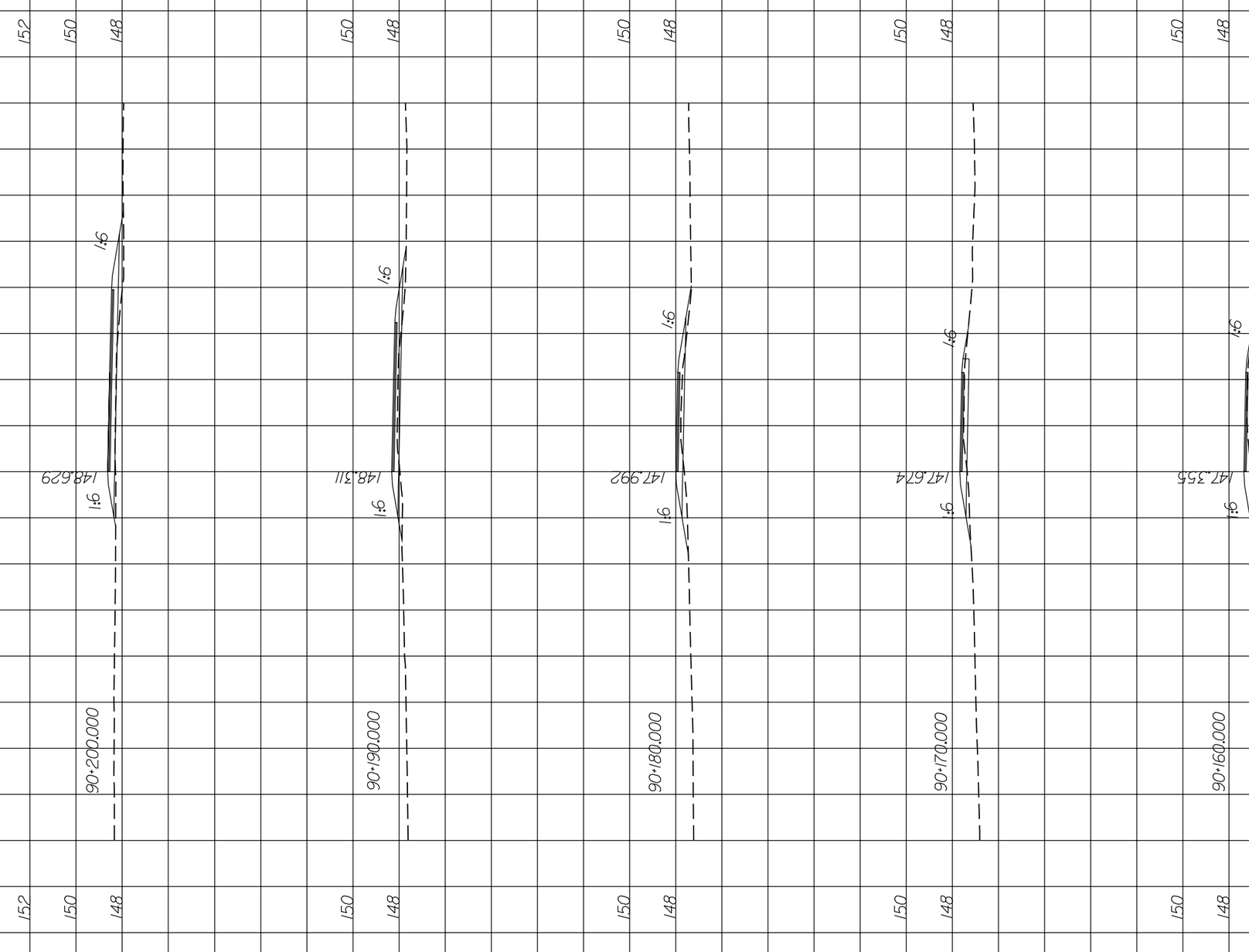

U.S. DEPARTMENT OF TRANSPORTATION
FEDERAL HIGHWAY ADMINISTRATION
EASTERN FEDERAL LANDS HIGHWAY DIVISION
STERLING, VIRGINIA

SHILOH NATIONAL MILITARY PARK

CROSS SECTIONS

TENT HOSPITAL SITE

OPTION I

0 2 5
SCALE IN METERS

SHEET 4 of 7

5/31/2008 2:03:35 PM M:\Projects\shl\502(3)\proj_dev\CADD\tentxss.dgn

NPS NO.	REG	STATE	PROJECT	SHEET NO.
304 / 41,920	SE	TN	TEA-21 SHIL 502(3)	M-31

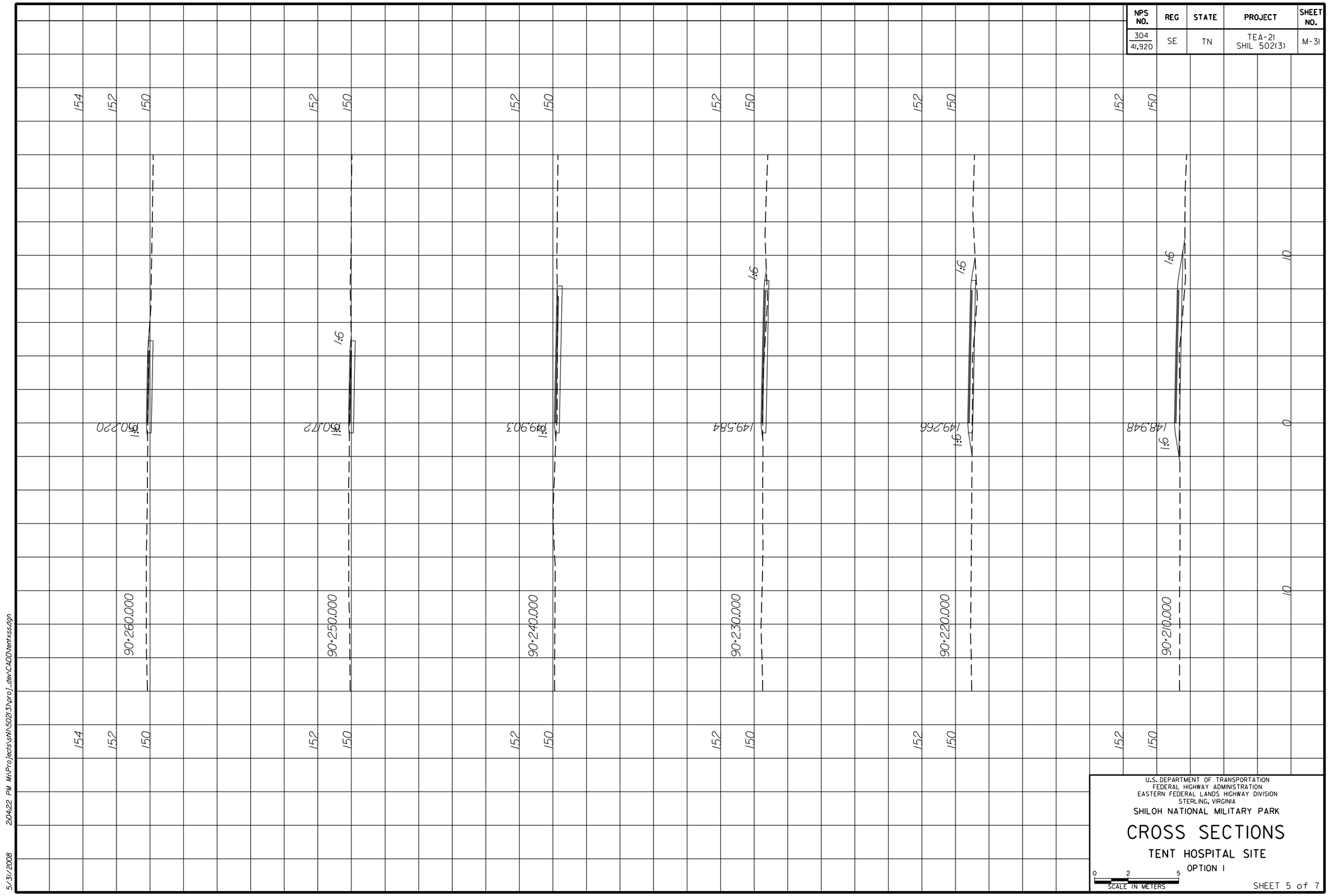

U.S. DEPARTMENT OF TRANSPORTATION
FEDERAL HIGHWAY ADMINISTRATION
EASTERN FEDERAL LANDS HIGHWAY DIVISION
STERLING, VIRGINIA

SHILOH NATIONAL MILITARY PARK

CROSS SECTIONS

TENT HOSPITAL SITE

OPTION 1

0 2 5
SCALE IN METERS

SHEET 5 of 7

5/31/2008 2:04:22 PM M:\Projects\shil\502(3)\proj_dev\CADD\tentxss.dgn

NPS NO.	REG	STATE	PROJECT	SHEET NO.
304 / 41,920	SE	TN	TEA-21 SHIL 502(3)	M-32

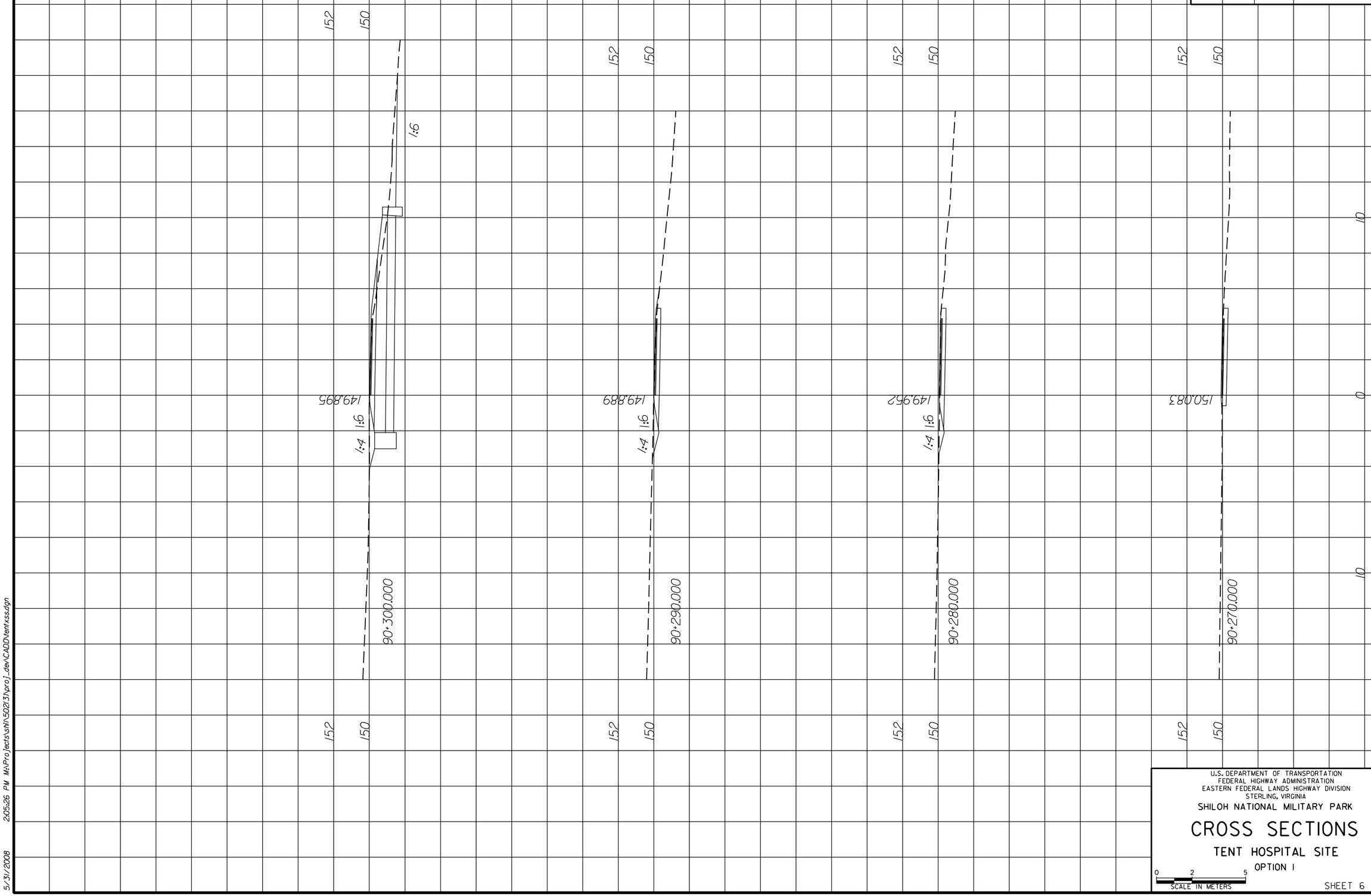

U.S. DEPARTMENT OF TRANSPORTATION
FEDERAL HIGHWAY ADMINISTRATION
EASTERN FEDERAL LANDS HIGHWAY DIVISION
STERLING, VIRGINIA

SHILOH NATIONAL MILITARY PARK

CROSS SECTIONS

TENT HOSPITAL SITE

OPTION 1

0 2 5
SCALE IN METERS

SHEET 6 of 7

5/31/2008 2:05:26 PM M:\Projects\sh\502(3)\proj_dev\CADD\tentxss.dgn

NPS NO.	REG	STATE	PROJECT	SHEET NO.
304 / 41,920	SE	TN	TEA-21 SHIL 502(3)	M-33

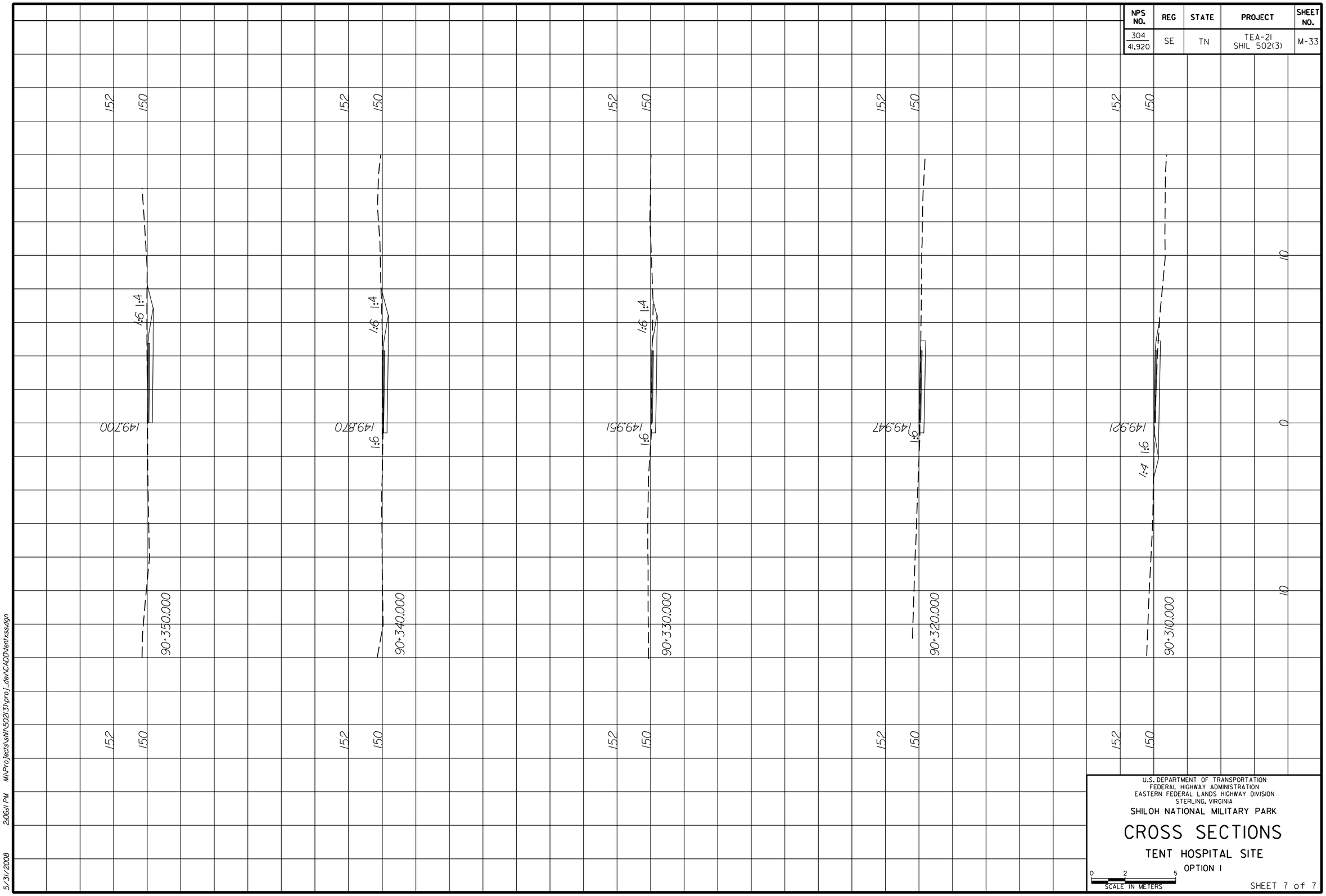

U.S. DEPARTMENT OF TRANSPORTATION
FEDERAL HIGHWAY ADMINISTRATION
EASTERN FEDERAL LANDS HIGHWAY DIVISION
STERLING, VIRGINIA

SHILOH NATIONAL MILITARY PARK

CROSS SECTIONS

TENT HOSPITAL SITE

OPTION 1

0 2 5
SCALE IN METERS

SHEET 7 of 7

5/31/2008 2:05:11 PM M:\Projects\shl\502(3)\proj_dev\CADD\tent xss.dgn

NPS NO.	REG	STATE	PROJECT	SHEET NO.
304 / 41,920	SE	TN	TEA- 21 SHIL 502(3)	M-34

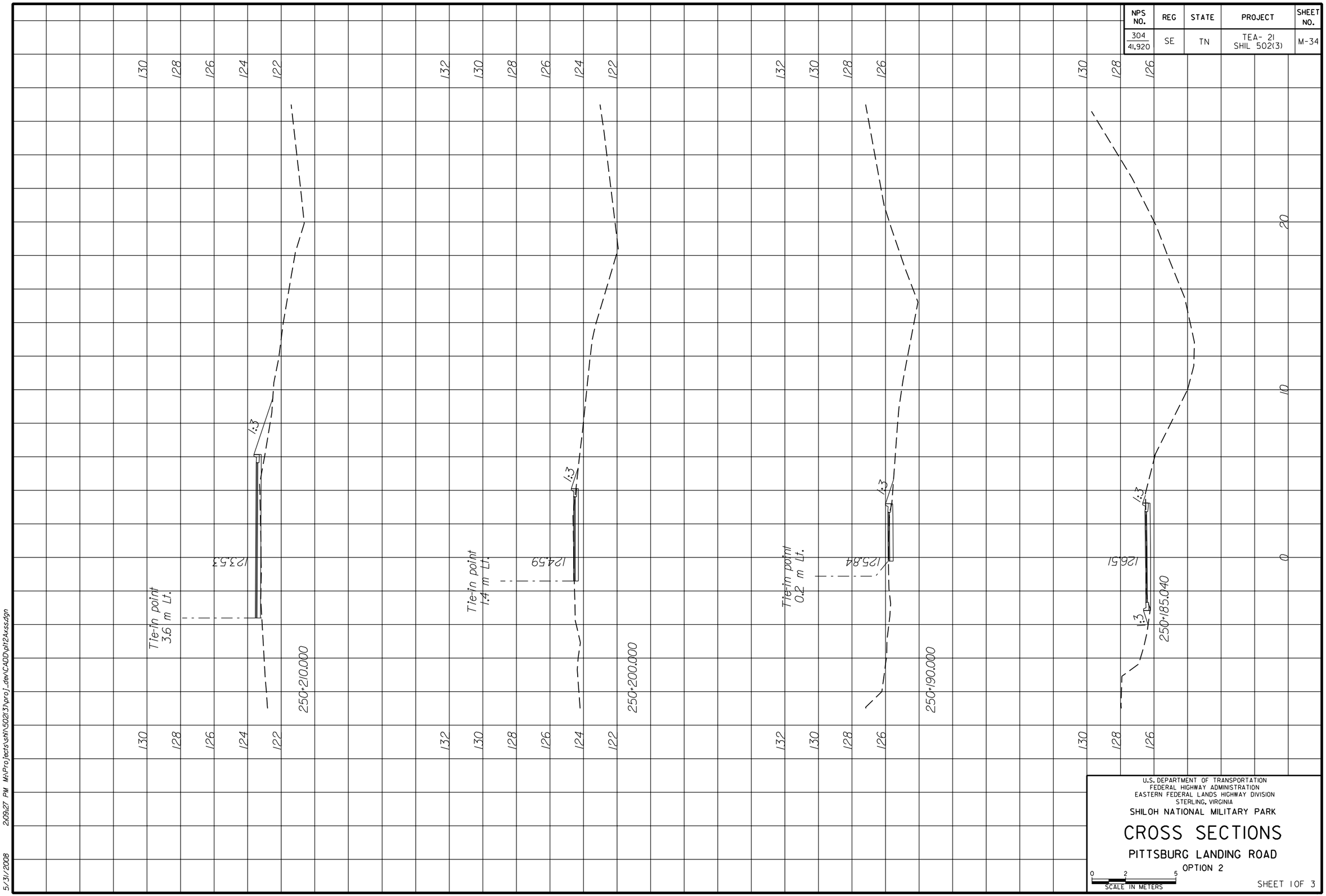

U.S. DEPARTMENT OF TRANSPORTATION
FEDERAL HIGHWAY ADMINISTRATION
EASTERN FEDERAL LANDS HIGHWAY DIVISION
STERLING, VIRGINIA

SHILOH NATIONAL MILITARY PARK

CROSS SECTIONS

PITTSBURG LANDING ROAD

OPTION 2

0 2 5
SCALE IN METERS

SHEET 1 OF 3

5/31/2008 2:09:27 PM M:\Projects\shi\502(3)\proj_dev\CAD\plt24xss.dgn

NPS NO.	REG	STATE	PROJECT	SHEET NO.
304 / 41,920	SE	TN	TEA- 21 SHIL 502(3)	M-35

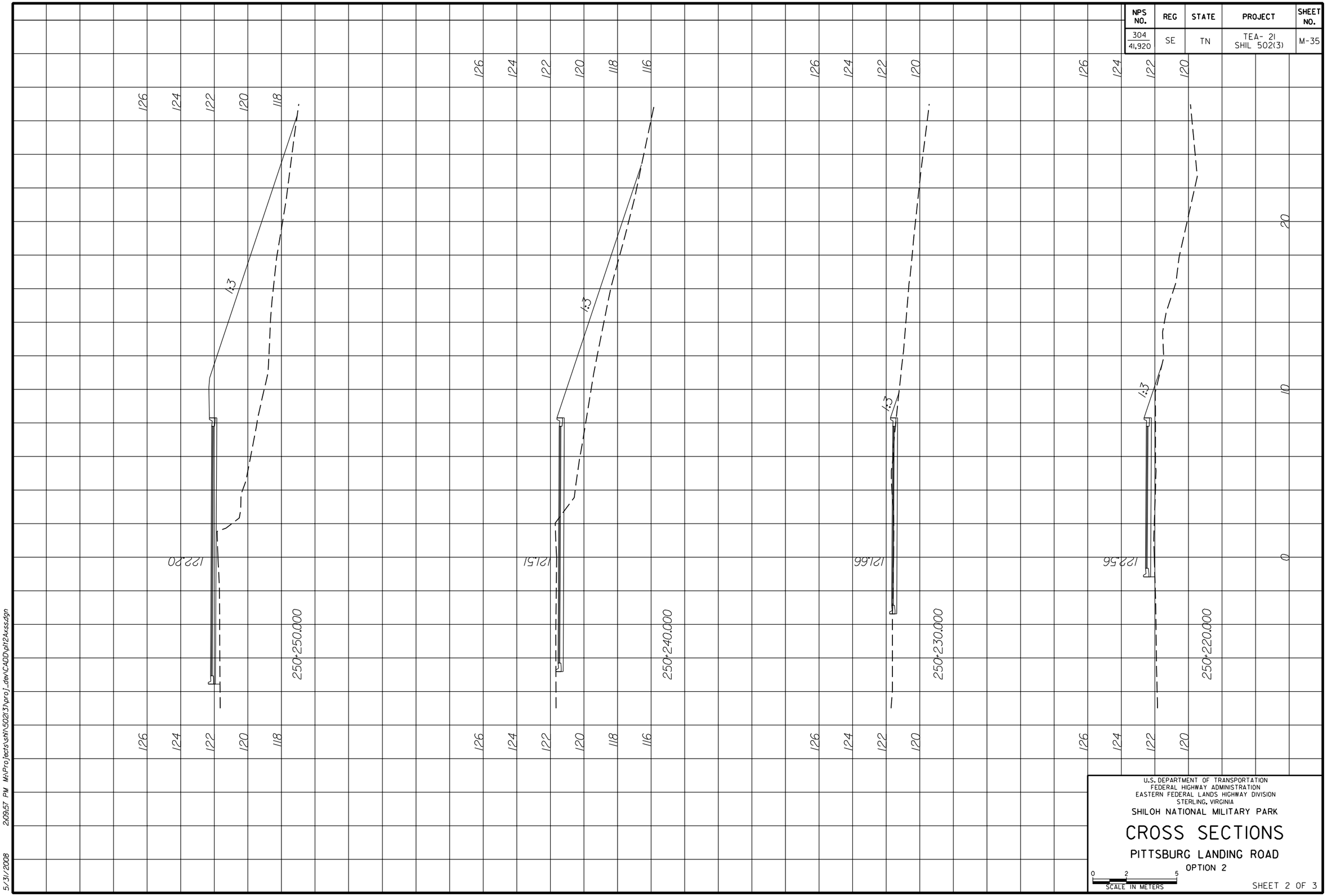

U.S. DEPARTMENT OF TRANSPORTATION
FEDERAL HIGHWAY ADMINISTRATION
EASTERN FEDERAL LANDS HIGHWAY DIVISION
STERLING, VIRGINIA

SHILOH NATIONAL MILITARY PARK

CROSS SECTIONS

PITTSBURG LANDING ROAD

OPTION 2

0 2 5
SCALE IN METERS

SHEET 2 OF 3

5/31/2008 2:09:57 PM M:\Projects\shil\502(3)\proj_dev\CAD\gil2kxss.dgn

NPS NO.	REG	STATE	PROJECT	SHEET NO.
304 / 41,920	SE	TN	TEA- 21 SHIL 502(3)	M-36

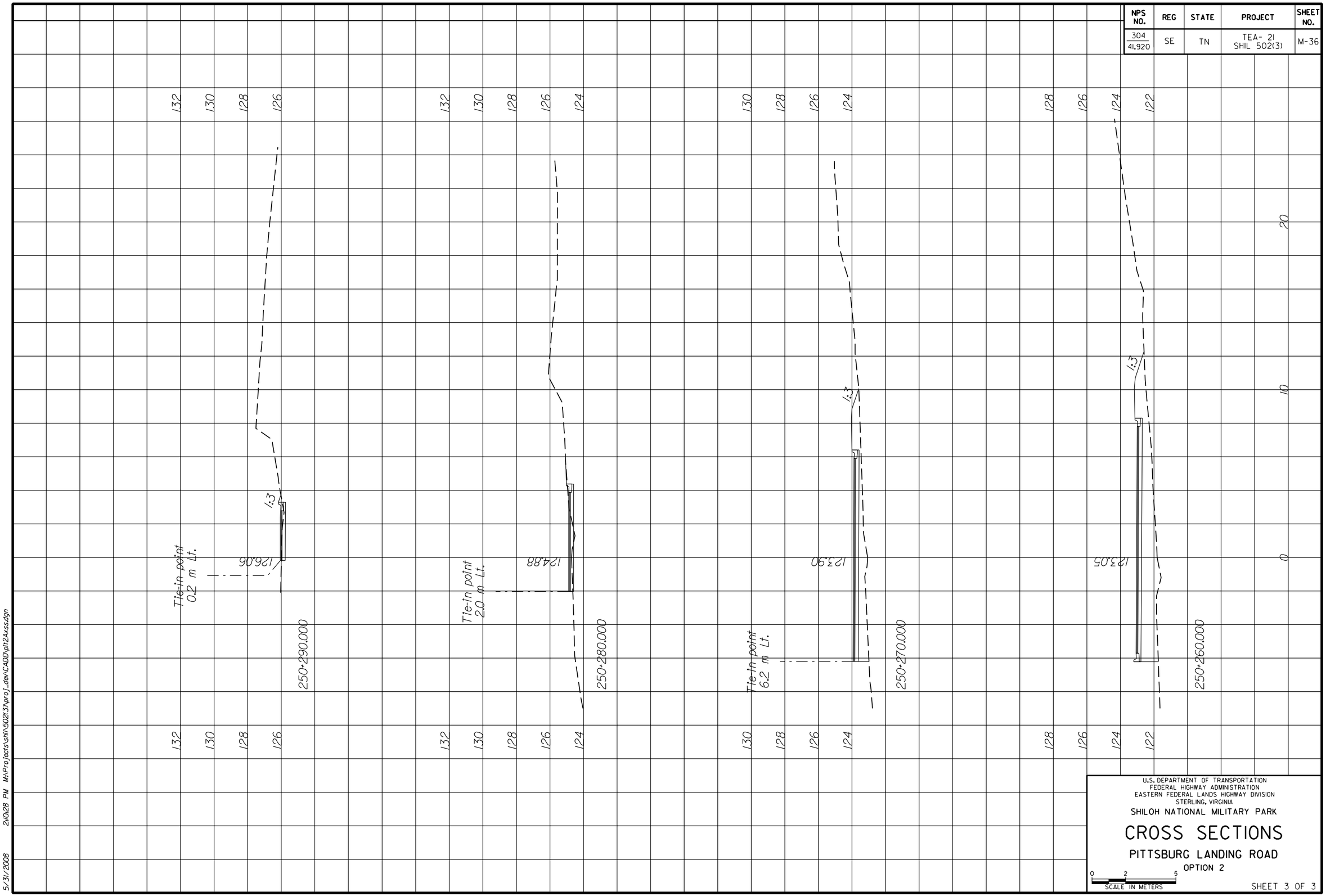

U.S. DEPARTMENT OF TRANSPORTATION
FEDERAL HIGHWAY ADMINISTRATION
EASTERN FEDERAL LANDS HIGHWAY DIVISION
STERLING, VIRGINIA

SHILOH NATIONAL MILITARY PARK

CROSS SECTIONS

PITTSBURG LANDING ROAD

OPTION 2

0 2 5
SCALE IN METERS

SHEET 3 OF 3

5/31/2008 2:10:28 PM M:\Projects\sh\502(3)\proj_dev\CADD\pl12Axss.dgn

NPS NO.	REGION	STATE	PROJECT	SHEET NO.	TOTAL SHEETS
304 / 41,920	SE	TN	TEA-21 SHIL 502(3)	N-1	

GENERAL NOTES

SPECIFICATIONS:

CONSTRUCTION :

Standard Specifications for Construction of Roads and Bridges on Federal Highway Projects, FP-03, Metric Unit

DESIGN:

AASHTO Standard Specifications for Highway Bridges, 1996 with Interim Specifications through 1999.

DESIGN LOADING: MS 18-44

DESIGN STRESSES:

Class A (AE) and class D (AE) Concrete:	f'c = 28 MPa at 28 days
Prestressed Concrete Cored Slabs:	f'c = 42 MPa at 28 days f'ci = 35 MPa at time of release
Reinforcing Steel:	fy = 420 MPa
Prestressing Steel:	f's = 1,860 MPa

CONCRETE:

Furnish class D (AE) concrete for bridge railing and approach slabs.
Furnish class P concrete for prestressed void slab.
Furnish class A (AE) for all other concrete.
Chamfer exposed corner 20 mm unless otherwise dimensioned.

REINFORCING STEEL:

Furnish reinforcing steel conforming to AASHTO M 31M, Grade 420. Lap splices 30 bar diameters unless otherwise shown. Provide 50 mm cover for reinforcing steel unless otherwise noted. Use epoxy coated reinforcing steel where located or anchored in Class D (AE) concrete.

PRESTRESSED CORED SLABS:

Prestressed cored slabs are AASHTO SIV-36 (Mod.).
Prestressing steel shall be 12.7 mm diameter, 7-wire, low-relaxation strand conforming to AASHTO M 203.
Pre-tension each strand to a total load of 137.8 KN at which load f'si = 0.75 f's = 1,395 MPa.

FOUNDATION:

See "FOUNDATION LAYOUT" sheet for estimated drilled shaft lengths.

UNITS:

All dimensions are in millimeters (mm) unless otherwise noted.

All stationing and elevations are in meters (m).

INDEX OF DRAWINGS

SHEET NO.	DRAWING TITLE
1	General Notes and Index
2	Plan and Elevation
3	Foundation Layout
4	Footing Reinforcement
5	Abutment Details - 1
6	Abutment Details - 2
7	Wingwall Details - 1
8	Wingwall Details - 2
9	Framing Plan and Typical Section
10	Exterior Slab Unit
11	Interior Slab Unit
12	Cored Slab Details
13	Top of Deck Elevations
14	Concrete Bridge Railing
15	End of Rail Details
16	Miscellaneous Details
17	Approach Slab
18	Reinforcing Steel Bar List
19	Epoxy Coated Reinforcing Steel Bar List
20	Boring Location Plan

U.S. DEPARTMENT OF TRANSPORTATION
FEDERAL HIGHWAY ADMINISTRATION
EASTERN FEDERAL LANDS HIGHWAY DIVISION

SHILOH NATIONAL MILITARY PARK

CAVALRY ROAD

BRIDGE OVER TILGHMAN BRANCH

GENERAL NOTES AND INDEX

NO.	DATE	BY	REVISIONS	NO.	DATE	BY	REVISIONS	DESIGNED BY	DRAWN BY	CHECKED BY	SCALE	PROJECT TEAM LEADER	BRIDGE DRAWING	DATE	DRAWING NO.
								SYP	SYP	GC	No scale	Khoa Nguyen	1 of 20	December 2007	B0404

6/2/2008 11:22:42 AM M:\Projects\sht\502(3)\bridge\Microsta\NOTES.dgn

NPS NO.	REGION	STATE	PROJECT	SHEET NO.	TOTAL SHEETS
304 / 41,920	SE	TN	TEA-21 SHIL 502(3)	N-2	

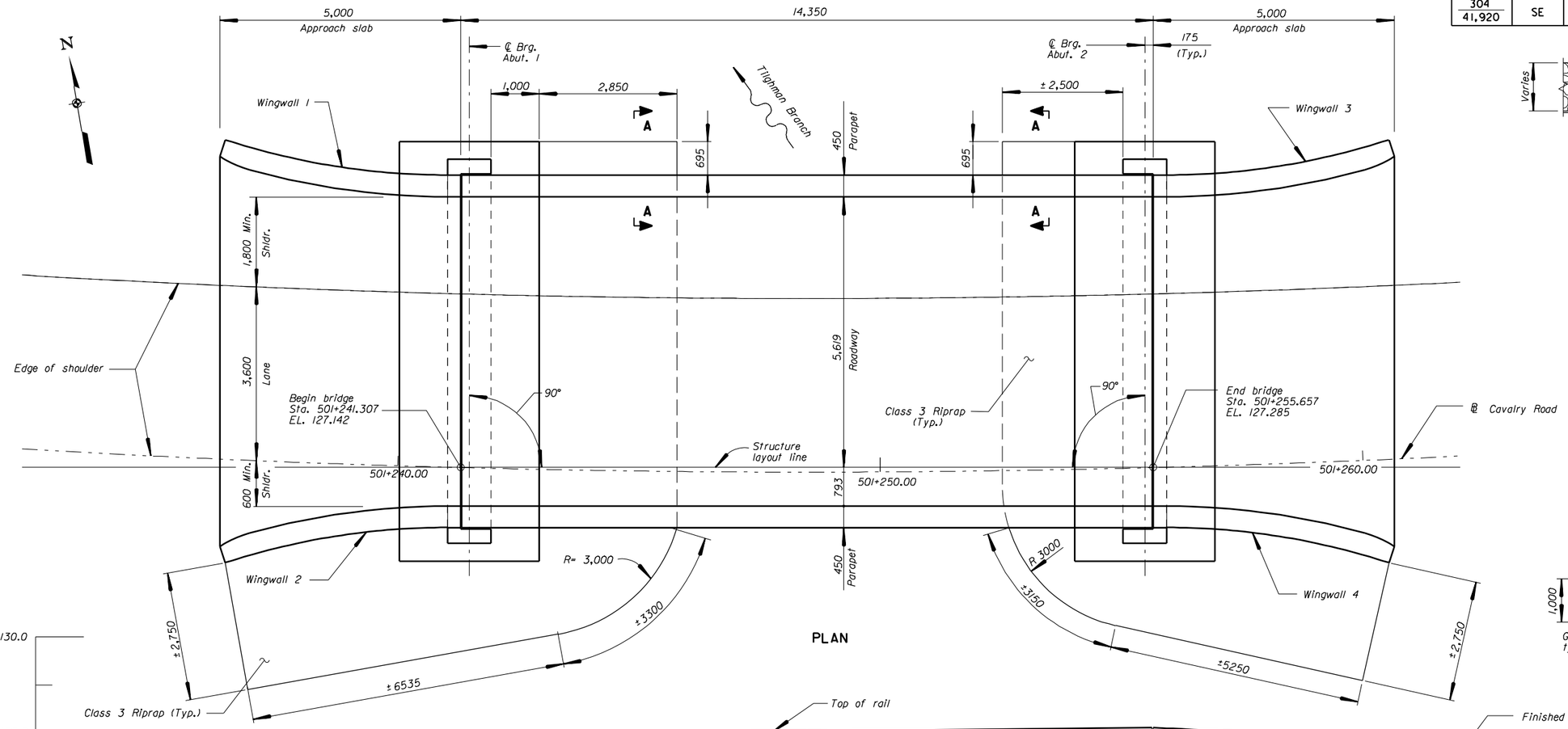

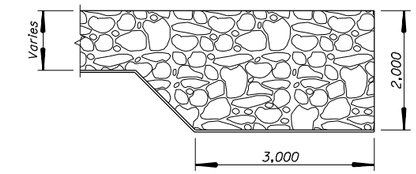

SECTION A-A

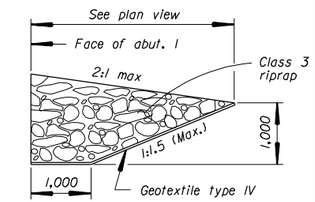

RIPRAP DETAIL AT ABUTMENT 1
(No scale)

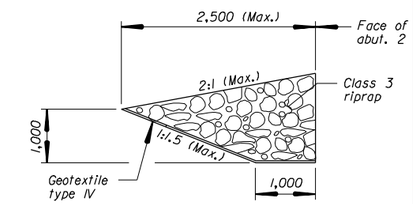

RIPRAP DETAIL AT ABUTMENT 2
(No scale)

Hydraulic Data			
Event	Discharge (cm/s)	Water Surface Elevation (m)	Freeboard (m)
2	5.27	124.83	1.6
50	20.70	125.49	0.94
100	24.30	125.58	0.85
500	33.20	125.79	0.64

U.S. DEPARTMENT OF TRANSPORTATION
FEDERAL HIGHWAY ADMINISTRATION
EASTERN FEDERAL LANDS HIGHWAY DIVISION

SHILOH NATIONAL MILITARY PARK

CAVALRY ROAD

BRIDGE OVER TILGHMAN BRANCH

PLAN AND ELEVATION

NO.	DATE	BY	REVISIONS	NO.	DATE	BY	REVISIONS	DESIGNED BY	DRAWN BY	CHECKED BY	SCALE	PROJECT TEAM LEADER	BRIDGE DRAWING	DATE	DRAWING NO.
								SYP	SYP	GC	1:50	Khoa Nguyen	2 of 20	December 2007	B0404

M:\Projects\shil\502(3)\bridge\Microsta\PE.dgn 10:12:55 AM 6/12/2008

NPS NO.	REGION	STATE	PROJECT	SHEET NO.	TOTAL SHEETS
304 / 41,920	SE	TN	TEA-21 SHIL 502(3)	N-3	

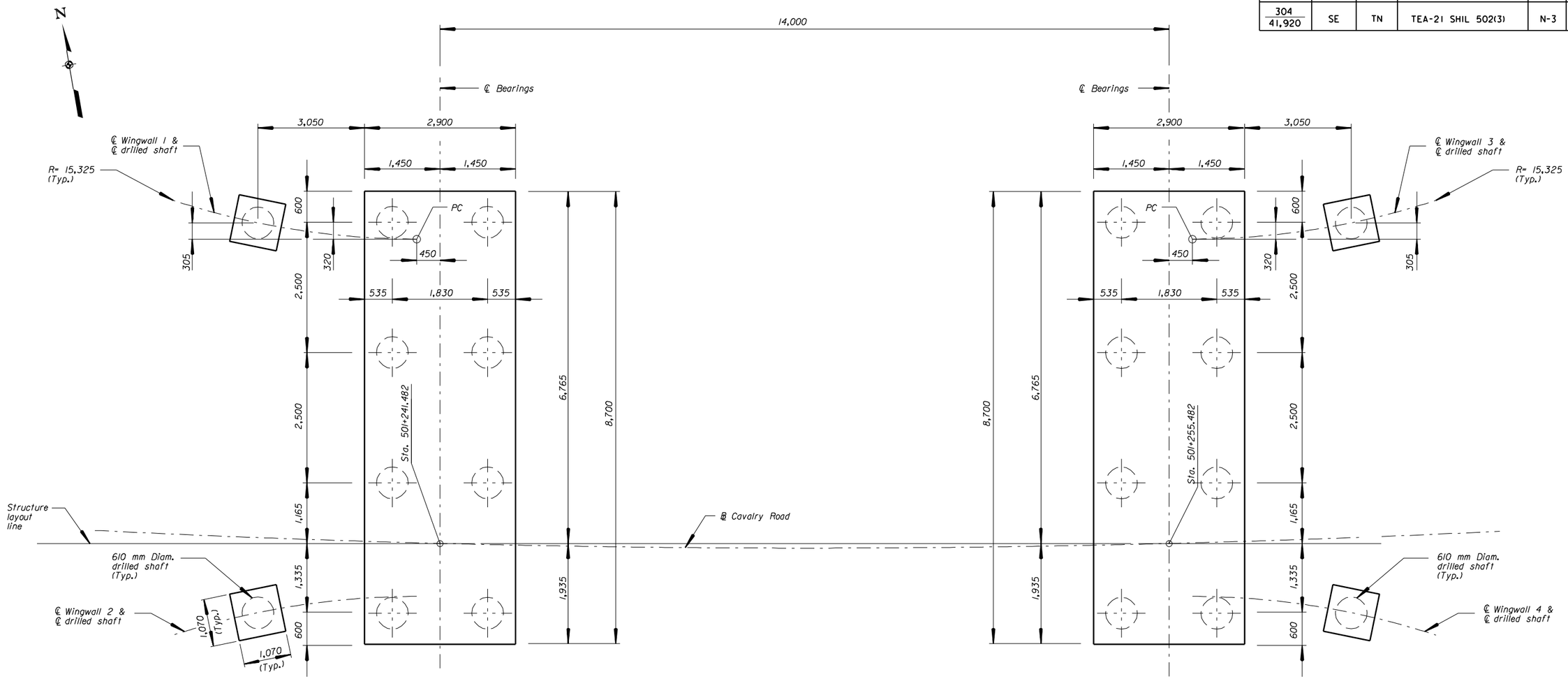

FOUNDATION PLAN

Note:

Measure drilled shaft spacing along bottom face of footing.

Estimated lengths of drilled shafts.

Location	Estimated total length of drilled shafts (m)
Abut. 1 & Wingwalls 1 & 2	137.5
Abut. 2 & Wingwalls 3 & 4	137.5

U.S. DEPARTMENT OF TRANSPORTATION
FEDERAL HIGHWAY ADMINISTRATION
EASTERN FEDERAL LANDS HIGHWAY DIVISION

SHILOH NATIONAL MILITARY PARK

CAVALRY ROAD

BRIDGE OVER TILGHMAN BRANCH

FOUNDATION LAYOUT

NO.	DATE	BY	REVISIONS	NO.	DATE	BY	REVISIONS	DESIGNED BY	DRAWN BY	CHECKED BY	SCALE	PROJECT TEAM LEADER	BRIDGE DRAWING	DATE	DRAWING NO.
								SYP	SYP	GC	1:40	Khoa Nguyen	3 of 20	December 2007	B0404

M:\Projects\shil\502(3)\bridge\Microsta\FOUNDLAY.dgn 11:20:02 AM 6/2/2008

NPS NO.	REGION	STATE	PROJECT	SHEET NO.	TOTAL SHEETS
304 / 41,920	SE	TN	TEA-21 SHIL 502(3)	N-4	

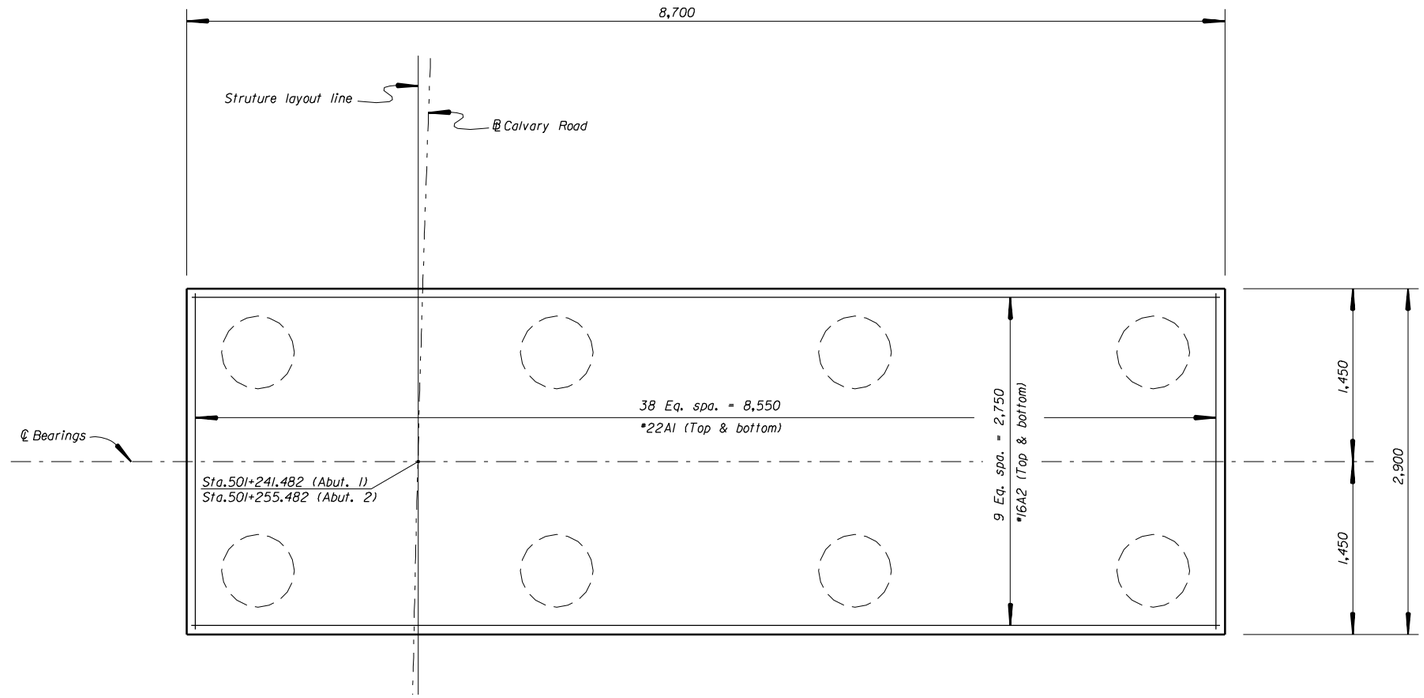

FOOTING REINFORCEMENT
(Abutment 1 shown, Abutment 2 similar)

Note:

For drilled shaft reinforcement, see "MISCELLANEOUS DETAILS" sheet

U.S. DEPARTMENT OF TRANSPORTATION
FEDERAL HIGHWAY ADMINISTRATION
EASTERN FEDERAL LANDS HIGHWAY DIVISION

SHILOH NATIONAL MILITARY PARK

CALVARY ROAD

BRIDGE OVER TILGHMAN BRANCH

FOOTING REINFORCEMENT - 1

NO.	DATE	BY	REVISIONS	NO.	DATE	BY	REVISIONS	DESIGNED BY	DRAWN BY	CHECKED BY	SCALE	PROJECT TEAM LEADER	BRIDGE DRAWING	DATE	DRAWING NO.
								GC	BSK	TKN	No scale	Khoa Nguyen	4 of 20	December 2007	B0404

6/2/2008 11:20:34 AM M:\Projects\shil\502(3)\bridge\Microsta\FTREINF.dgn

NPS NO.	REGION	STATE	PROJECT	SHEET NO.	TOTAL SHEETS
304 / 41,920	SE	TN	TEA-21 SHIL 502(3)	N-5	

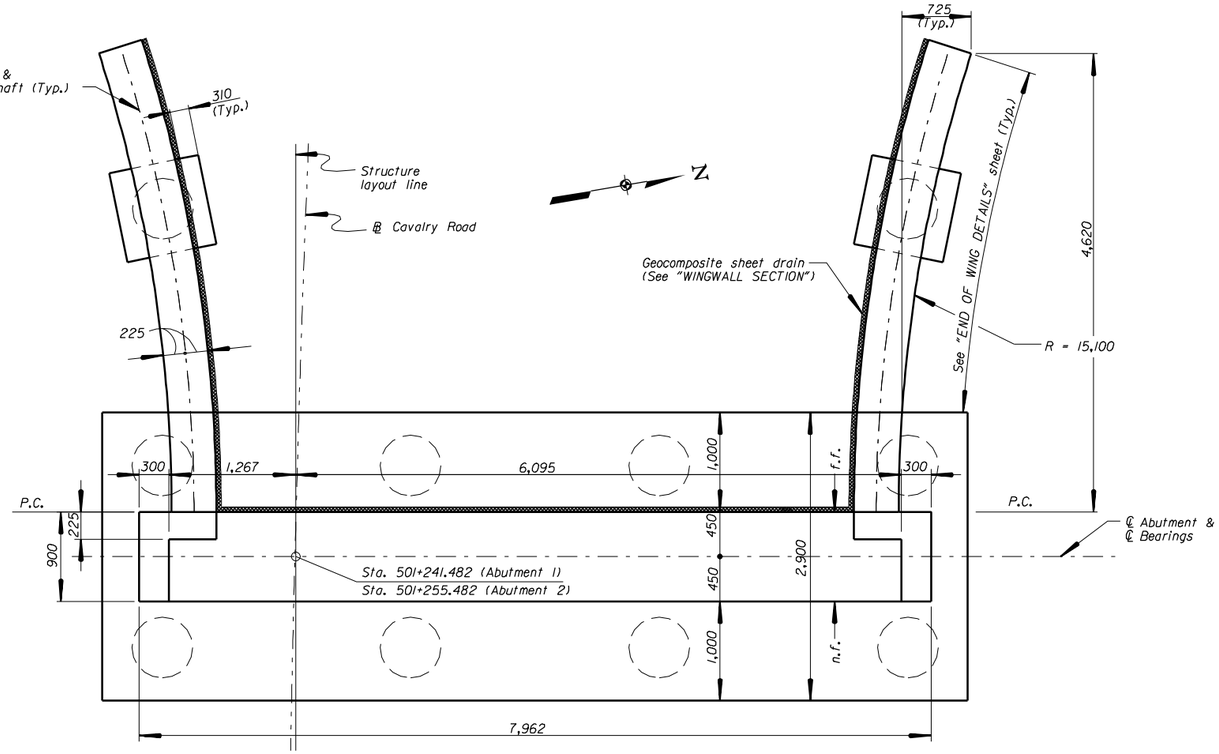

PLAN

(Abutment 1 shown, Abutment 2 similar)

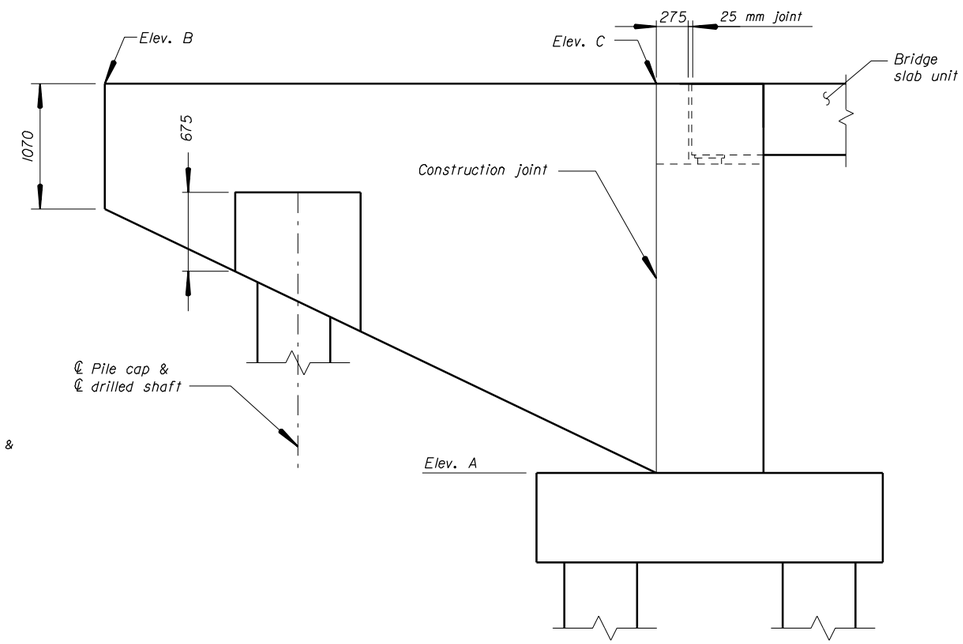

WINGWALL ELEVATION

(WINGWALLS 1, 2, 3 and 4)

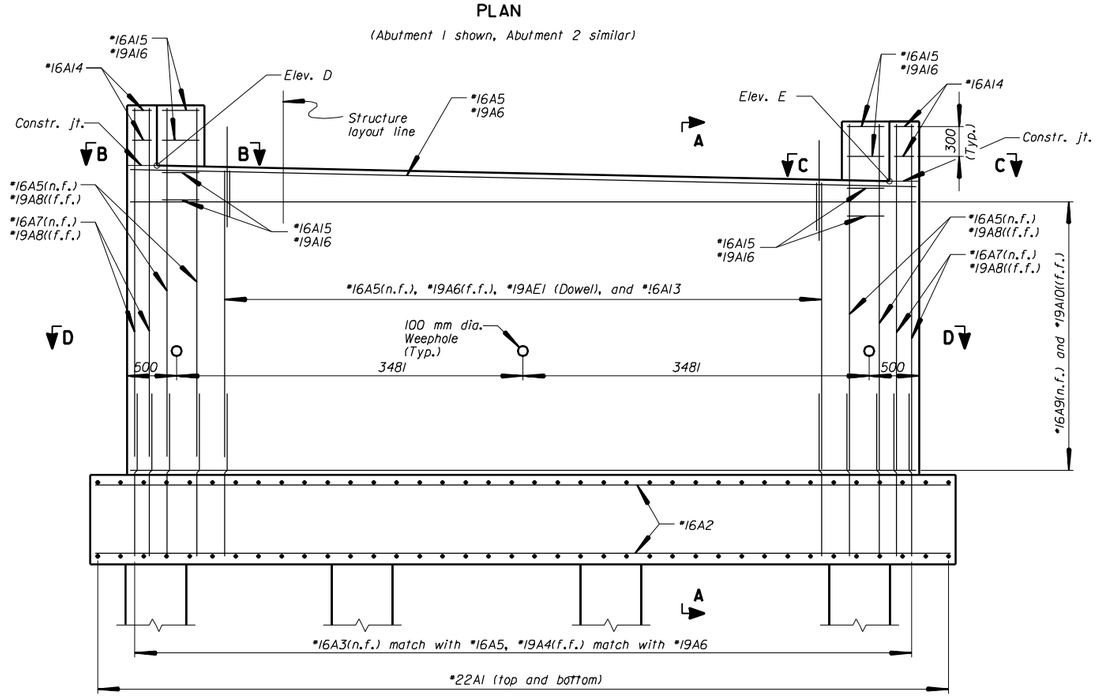

ELEVATION

(Abutment 1 shown, Abutment 2 similar. See "Abutment Details-2" sheet for Sections A-A, B-B, C-C, and D-D)
(Wingwall reinforcement not shown)

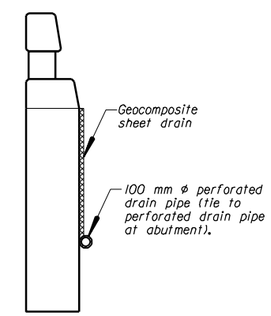

WINGWALL SECTION

NOTE: Geocomposite sheet drain and 100 mm ϕ perforated drain pipe continuous behind wingwall and abutment. Cap ends of pipe. Tie wingwall perforated pipe to abutment perforated pipe to drain through weepholes at face of abutment.
Cost of drain pipes is included in the Geocomposite Sheet Drain System pay item.

WINGWALLS ELEVATIONS			
WINGWALL	A	B	C
1	123.400	126.901	126.964
2	123.400	127.085	127.107
3	123.540	127.150	127.114
4	123.540	127.324	127.256

ABUTMENT ELEVATIONS		
ABUTMENT	D	E
1	126.516	126.351
2	126.498	126.658

Note:
1. See "WINGWALL DETAILS-1" Sheet for additional abutment bars.

U.S. DEPARTMENT OF TRANSPORTATION
FEDERAL HIGHWAY ADMINISTRATION
EASTERN FEDERAL LANDS HIGHWAY DIVISION

SHILOH NATIONAL MILITARY PARK

CAVALRY ROAD

BRIDGE OVER TILGHMAN BRANCH

ABUTMENT DETAILS-1

NO.	DATE	BY	REVISIONS	NO.	DATE	BY	REVISIONS	DESIGNED BY	DRAWN BY	CHECKED BY	SCALE	PROJECT TEAM LEADER	BRIDGE DRAWING	DATE	DRAWING NO.
								SYP	SYP	GC	No scale	Khoa Nguyen	5 of 20	December 2007	B0404

M:\Projects\shil\502(3)\bridge\Microsta\ABUTDETS1.dgn 1:36:38 PM 6/2/2008

NPS NO.	REGION	STATE	PROJECT	SHEET NO.	TOTAL SHEETS
304 / 41,920	SE	TN	TEA-21 SHIL 502(3)	N-6	

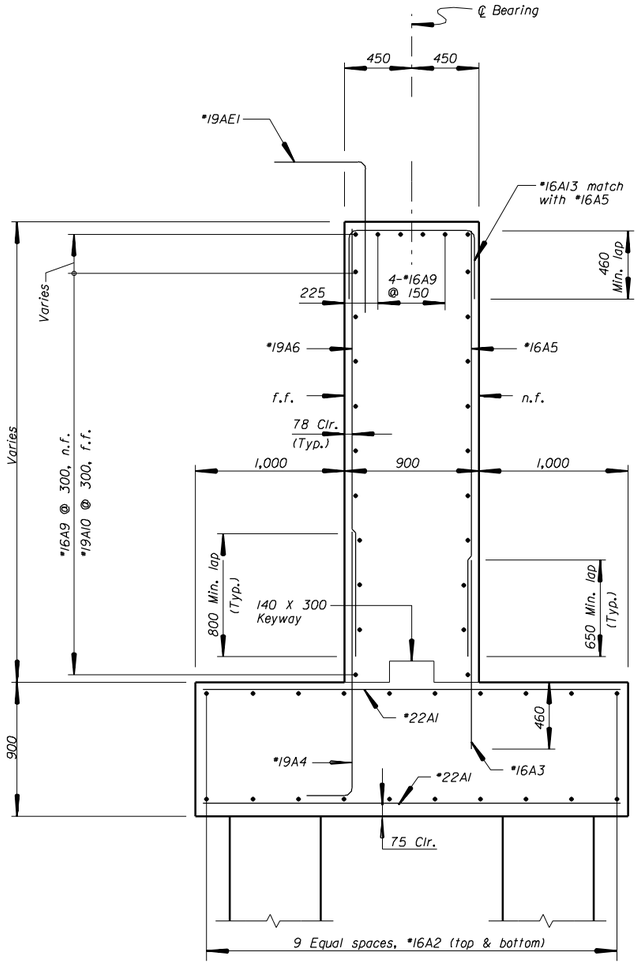

SECTION A-A

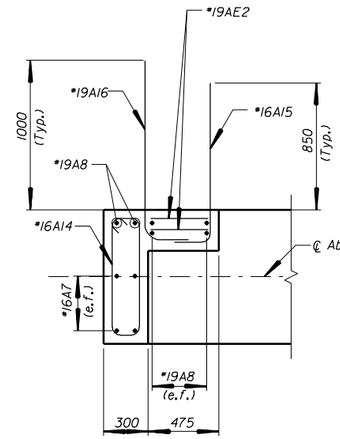

SECTION B-B

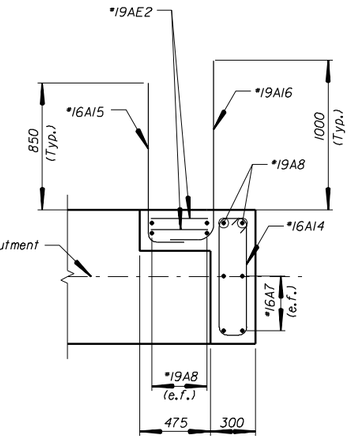

SECTION C-C

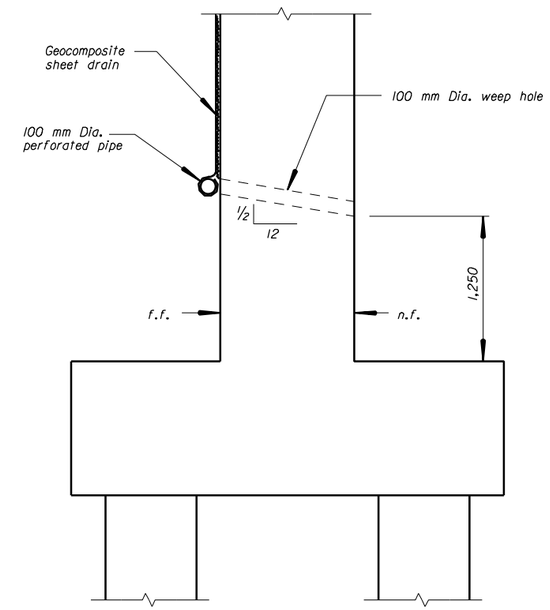

DRAINAGE DETAIL

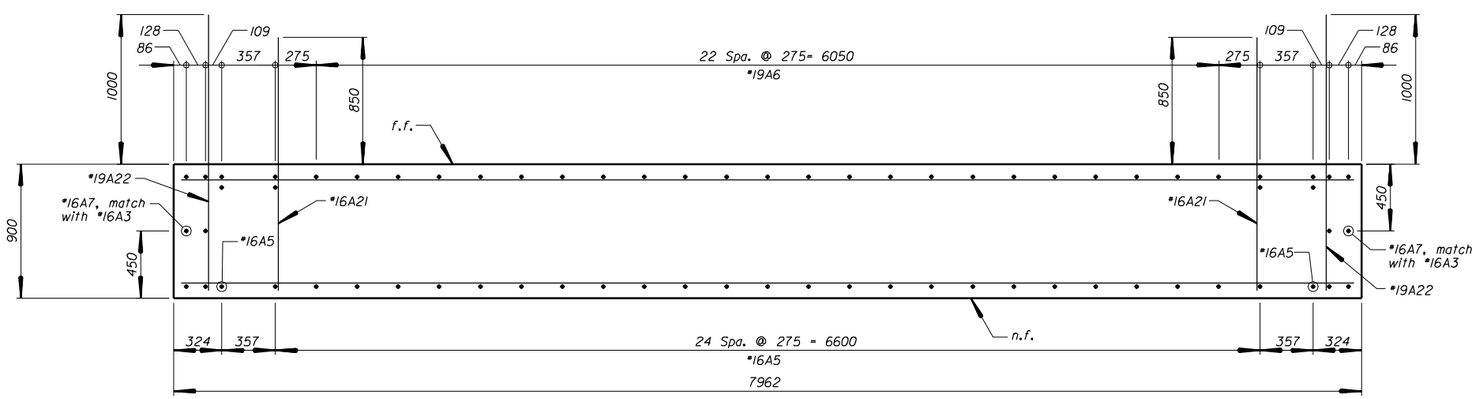

SECTION D-D

Note:

1. See "APPROACH SLAB" sheet for #19AE1 dowel detail.

Key:

n.f. = near face
f.f. = far face
e.f. = each face

U.S. DEPARTMENT OF TRANSPORTATION
FEDERAL HIGHWAY ADMINISTRATION
EASTERN FEDERAL LANDS HIGHWAY DIVISION

SHILOH NATIONAL MILITARY PARK

CAVALRY ROAD

BRIDGE OVER TILGHMAN BRANCH

ABUTMENT DETAILS - 2

NO.	DATE	BY	REVISIONS	NO.	DATE	BY	REVISIONS	DESIGNED BY	DRAWN BY	CHECKED BY	SCALE	PROJECT TEAM LEADER	BRIDGE DRAWING	DATE	DRAWING NO.
								SYP	SYP	GC	No scale	Khoa Nguyen	6 of 20	December 2007	B0404

M:\Projects\shil\502(3)\bridge\Microsta\ABUTDETS2.dgn 11:13:52 AM 6/2/2008

NPS NO.	REGION	STATE	PROJECT	SHEET NO.	TOTAL SHEETS
304 / 41,920	SE	TN	TEA-21 SHIL 502(3)	N-7	

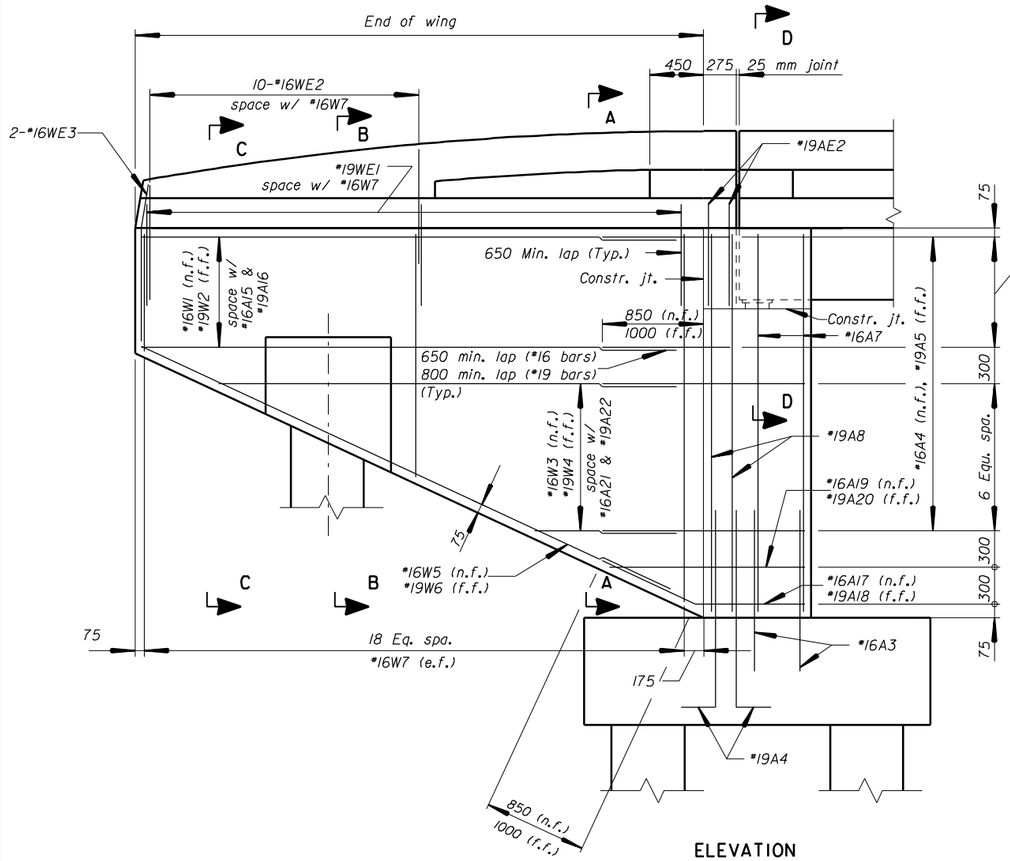

ELEVATION
WINGWALL 1 & 3

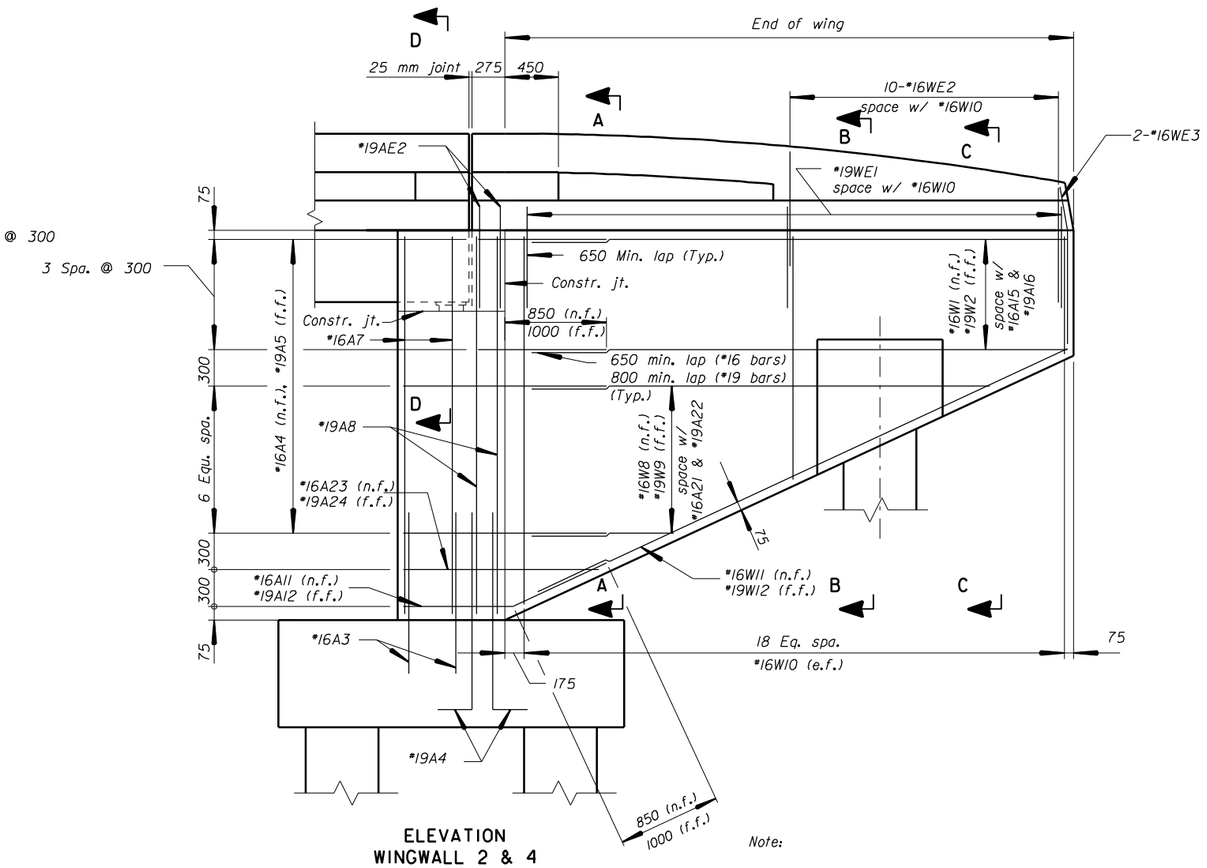

ELEVATION
WINGWALL 2 & 4

Note:

1- For Sections A-A thru D-D, and Detail A, see "WINGWALL REINFORCEMENT - 2" sheet.

Key:

n.f. = near face
f.f. = far face
e.f. = each face

U.S. DEPARTMENT OF TRANSPORTATION
FEDERAL HIGHWAY ADMINISTRATION
EASTERN FEDERAL LANDS HIGHWAY DIVISION

SHILOH NATIONAL MILITARY PARK

CAVALRY ROAD

BRIDGE OVER TILGHMAN BRANCH

WINGWALL DETAILS - 1

NO.	DATE	BY	REVISIONS	NO.	DATE	BY	REVISIONS	DESIGNED BY	DRAWN BY	CHECKED BY	SCALE	PROJECT TEAM LEADER	BRIDGE DRAWING	DATE	DRAWING NO.
								SYP	SYP	GC	No scale	Khoa Nguyen	7 of 20	December 2007	B0404

6/2/2008 1:42:52 PM M:\Projects\shil\502(3)\bridge\Microsta\WINGDETS1.dgn

NPS NO.	REGION	STATE	PROJECT	SHEET NO.	TOTAL SHEETS
304 / 41,920	SE	TN	TEA-21 SHIL 502(3)	N-8	

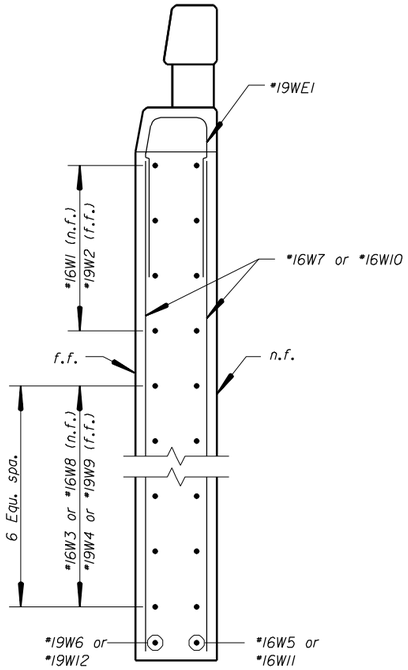

SECTION A-A

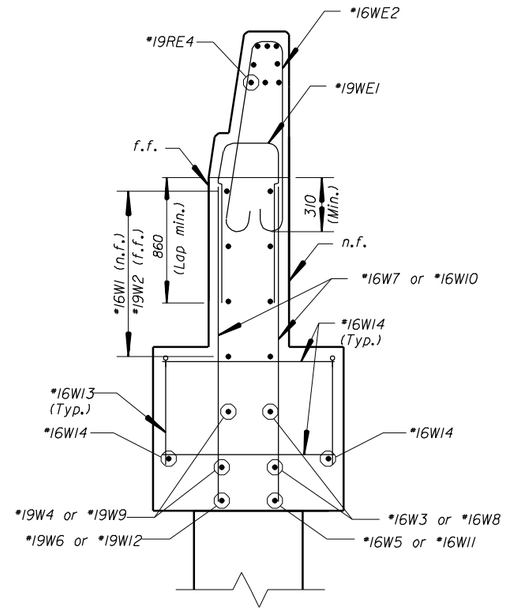

SECTION B-B

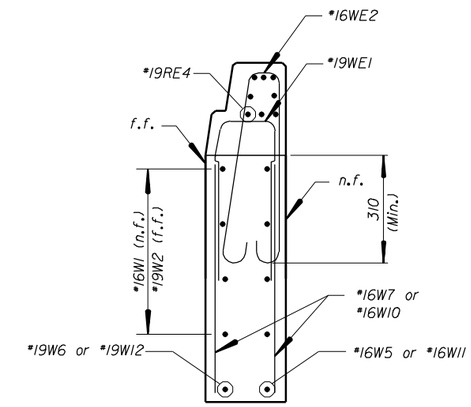

SECTION C-C

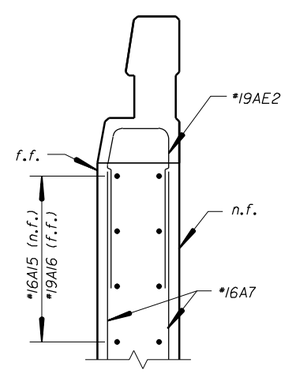

SECTION D-D

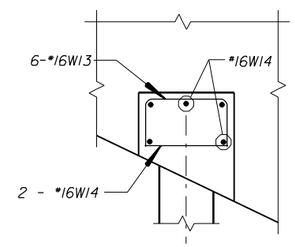

DETAIL A
(Typical over drilled shafts)

Key:

n.f. = near face
f.f. = far face
e.f. = each face

U.S. DEPARTMENT OF TRANSPORTATION
FEDERAL HIGHWAY ADMINISTRATION
EASTERN FEDERAL LANDS HIGHWAY DIVISION

SHILOH NATIONAL MILITARY PARK

CAVALRY ROAD

BRIDGE OVER TILGHMAN BRANCH

WINGWALL DETAILS - 2

NO.	DATE	BY	REVISIONS	NO.	DATE	BY	REVISIONS	DESIGNED BY	DRAWN BY	CHECKED BY	SCALE	PROJECT TEAM LEADER	BRIDGE DRAWING	DATE	DRAWING NO.
								SYP	SYP	GC	No scale	Khoa Nguyen	8 of 20	December 2007	B0404

M:\Projects\shil\502(3)\bridge\Microsta\WINGDETS2.dgn 11:27:18 AM 6/2/2008

NPS NO.	REGION	STATE	PROJECT	SHEET NO.	TOTAL SHEETS
304 / 41,920	SE	TN	TEA-21 SHIL 502(3)	N-9	

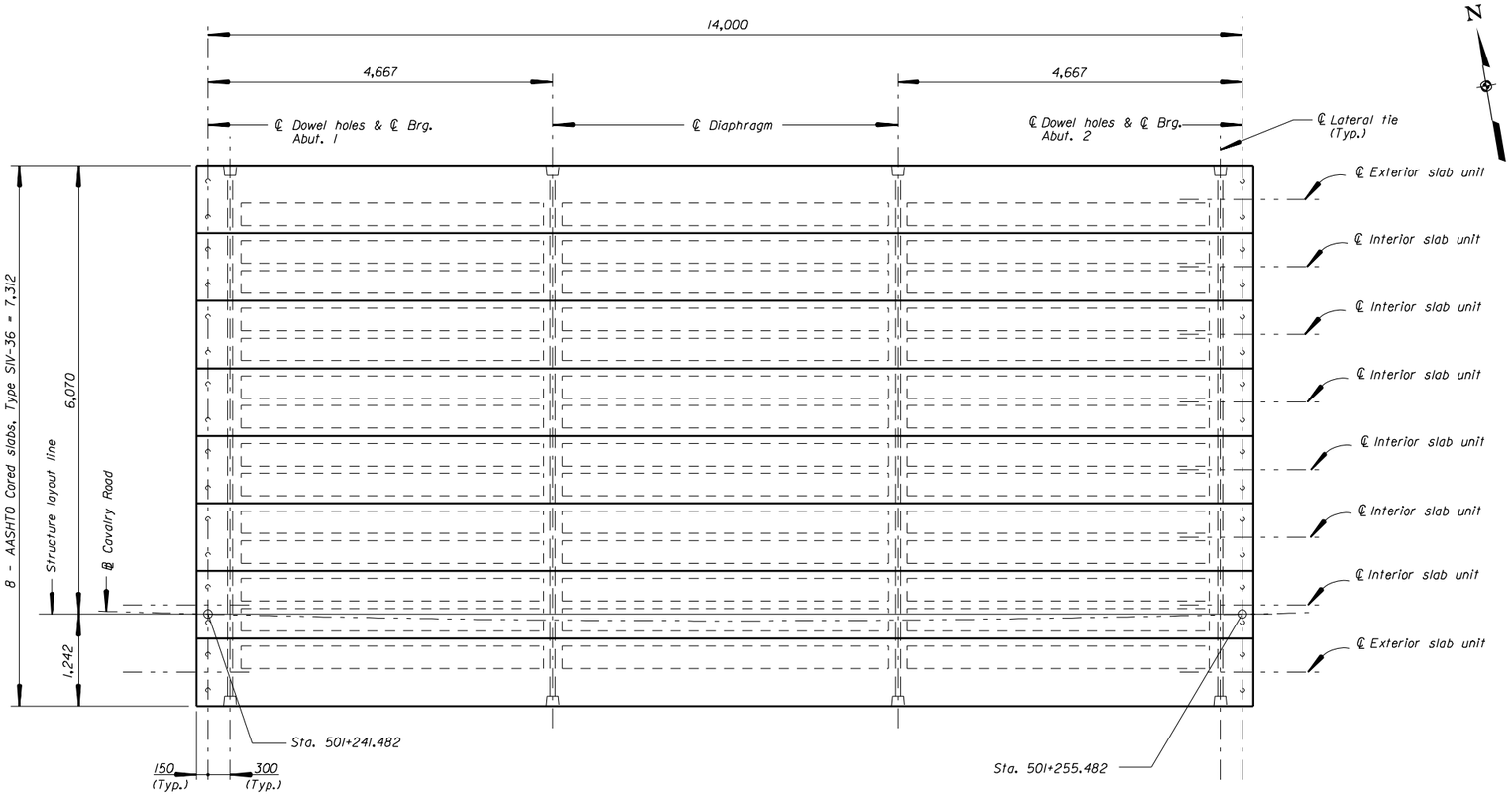

FRAMING PLAN

Scale 1:40

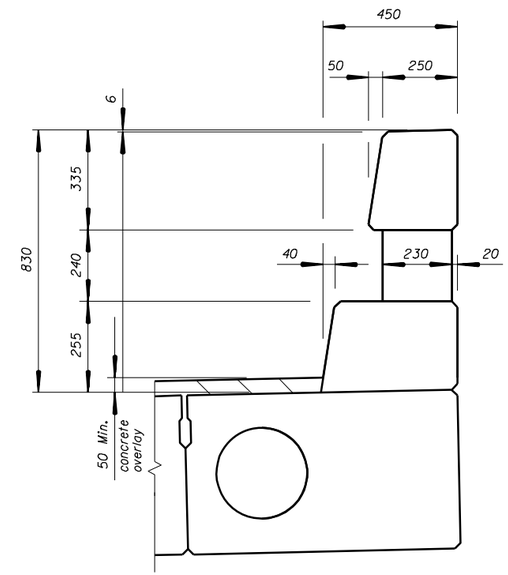

BRIDGE RAIL SECTION

Scale 1:10

Note:

For bridge rail reinforcement, see "CONCRETE BRIDGE RAILING" sheet.

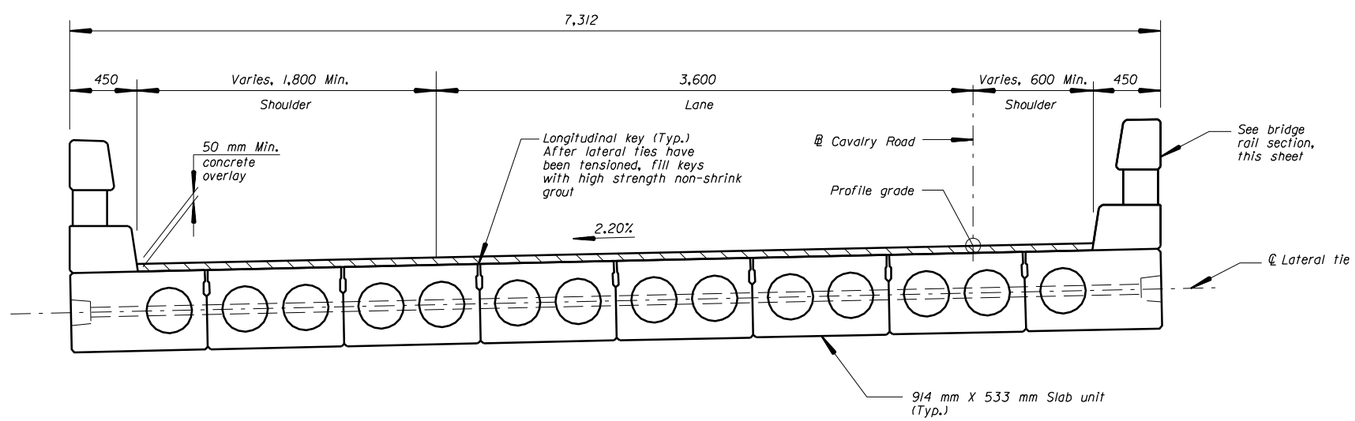

TYPICAL SECTION

Scale 1:20

U.S. DEPARTMENT OF TRANSPORTATION
FEDERAL HIGHWAY ADMINISTRATION
EASTERN FEDERAL LANDS HIGHWAY DIVISION

SHILOH NATIONAL MILITARY PARK

CAVALRY ROAD

BRIDGE OVER TILGHMAN BRANCH

FRAMING PLAN AND TYPICAL SECTION

NO.	DATE	BY	REVISIONS	NO.	DATE	BY	REVISIONS	DESIGNED BY	DRAWN BY	CHECKED BY	SCALE	PROJECT TEAM LEADER	BRIDGE DRAWING	DATE	DRAWING NO.
								SYP	SYP	GC	As shown	Khoa Nguyen	9 of 20	December 2007	B0404

6/2/2008 11:26:13 AM M:\Projects\shil\502(3)\bridge\Microsta\TYPSEC_FRMPLN.dgn

NPS NO.	REGION	STATE	PROJECT	SHEET NO.	TOTAL SHEETS
304 / 41,920	SE	TN	TEA-21 SHIL 502(3)	N-10	

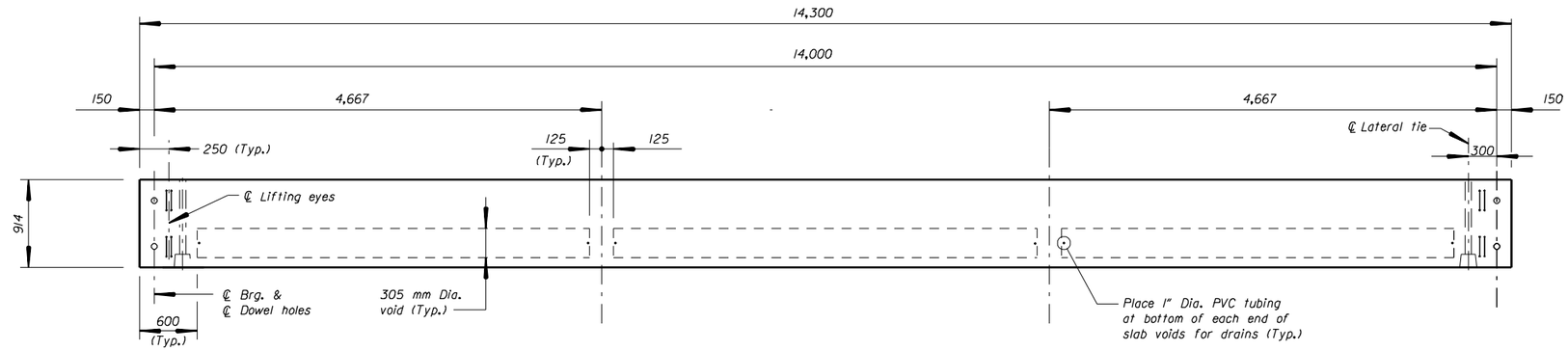

PLAN

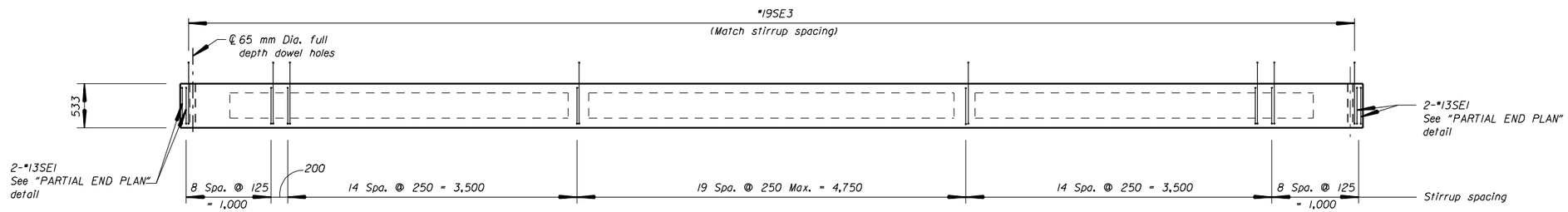

ELEVATION

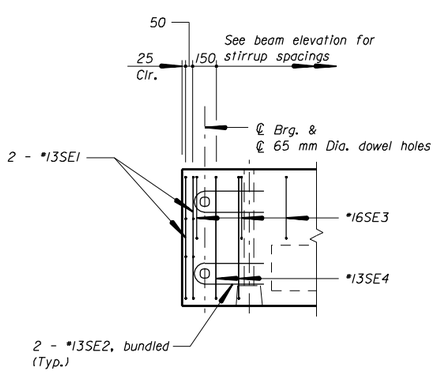

PARTIAL END PLAN

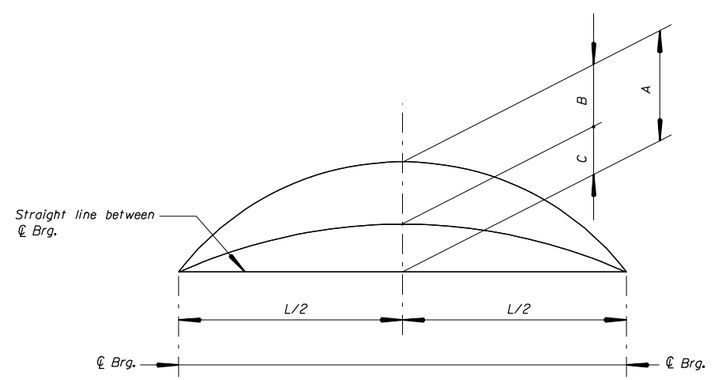

A = estimated camber due to prestress and self weight of the unit only.

B = estimated dead load deflection due to concrete overlay and concrete rail.

C = net final camber.

CAMBER TABLE (mm)			
	A	B	C
Midspan	28	17	11

CAMBER DIAGRAM

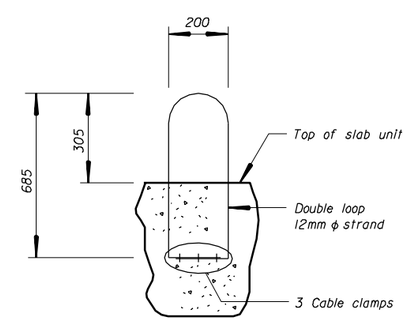

LIFTING EYE DETAIL

Note:
After slab units are placed, cut lifting eyes flush with top of the slab.

Note:
For slab unit sections, see "CORE SLAB DETAILS" sheet.

ESTIMATED QUANTITIES		
ONE SLAB UNIT		
ITEM	UNIT	QUANTITY
Concrete	m^3	6.0
Reinf. steel	Kg	595
12.7 mm ϕ strands	m	186

Note:
All reinforcing steel shall be epoxy coated.

U.S. DEPARTMENT OF TRANSPORTATION
FEDERAL HIGHWAY ADMINISTRATION
EASTERN FEDERAL LANDS HIGHWAY DIVISION

SHILOH NATIONAL MILITARY PARK

CAVALRY ROAD

BRIDGE OVER TILGHMAN BRANCH

EXTERIOR SLAB UNIT

NO.	DATE	BY	REVISIONS	NO.	DATE	BY	REVISIONS	DESIGNED BY	DRAWN BY	CHECKED BY	SCALE	PROJECT TEAM LEADER	BRIDGE DRAWING	DATE	DRAWING NO.
								SYP	SYP	GC	No scale	Khoa Nguyen	10 of 20	December 2007	B0404

M:\Projects\sthl\502(3)\bridge\Microsta\EXT_BEAM.dgn 11:19:20 AM 6/2/2008

NPS NO.	REGION	STATE	PROJECT	SHEET NO.	TOTAL SHEETS
304 / 41,920	SE	TN	TEA-21 SHIL 502(3)	N-11	

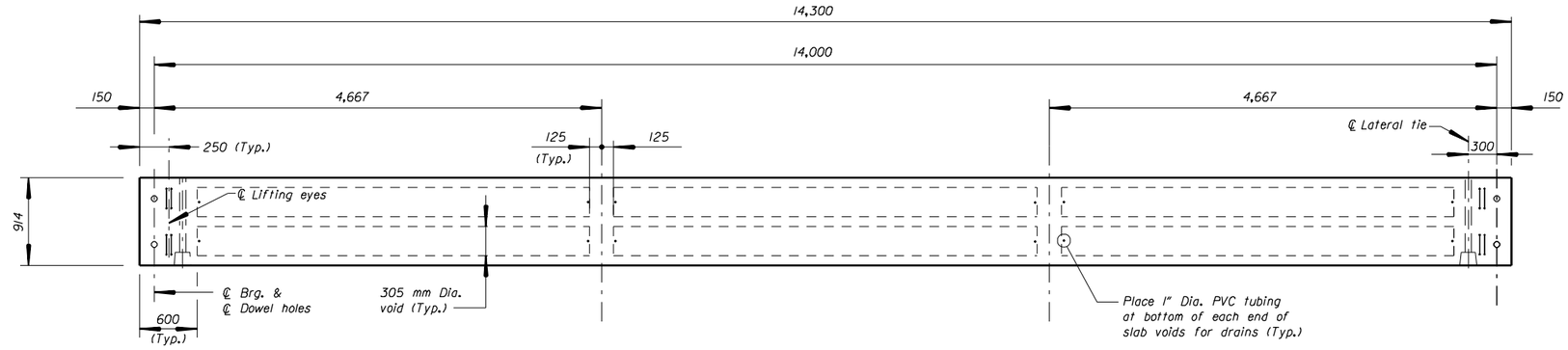

PLAN

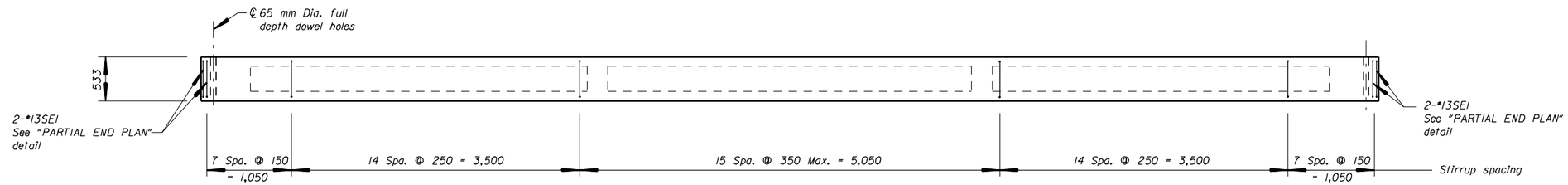

ELEVATION

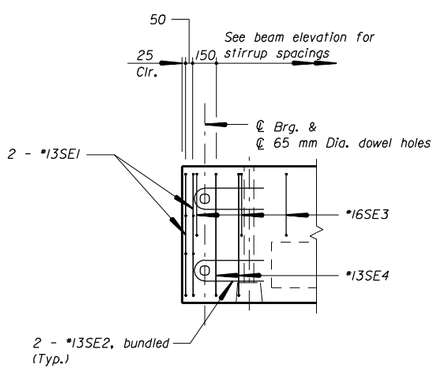

PARTIAL END PLAN

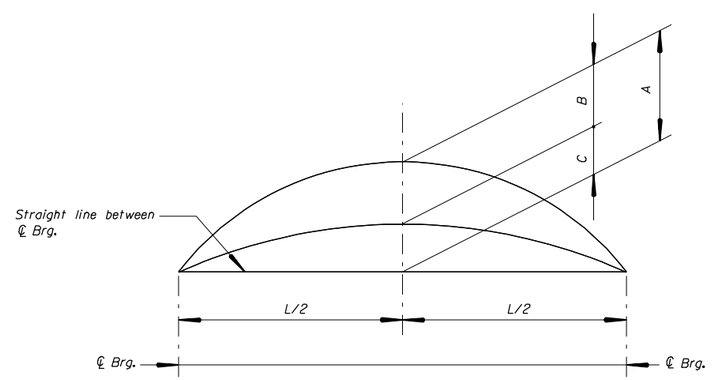

A = estimated camber due to prestress and self weight of the unit only.

B = estimated dead load deflection due to concrete overlay and concrete rail.

C = net final camber.

CAMBER TABLE (mm)			
	A	B	C
Midspan	35	17	18

CAMBER DIAGRAM

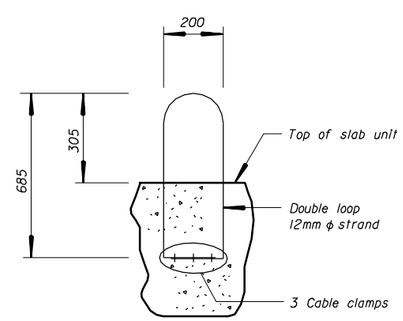

LIFTING EYE DETAIL

Note:
After slab units are placed, cut lifting eyes flush with top of the slab.

Note:
For slab unit sections, see "CORE SLAB DETAILS" sheet.

ESTIMATED QUANTITIES		
ONE SLAB UNIT		
ITEM	UNIT	QUANTITY
Concrete	m^3	5.2
Reinf. steel	Kg	270
12.7 mm ϕ strands	m	186

Note:
All reinforcing steel shall be epoxy coated.

U.S. DEPARTMENT OF TRANSPORTATION
FEDERAL HIGHWAY ADMINISTRATION
EASTERN FEDERAL LANDS HIGHWAY DIVISION

SHILOH NATIONAL MILITARY PARK

CAVALRY ROAD

BRIDGE OVER TILGHMAN BRANCH

INTERIOR SLAB UNIT

NO.	DATE	BY	REVISIONS	NO.	DATE	BY	REVISIONS	DESIGNED BY	DRAWN BY	CHECKED BY	SCALE	PROJECT TEAM LEADER	BRIDGE DRAWING	DATE	DRAWING NO.
								SYP	SYP	GC	No scale	Khoa Nguyen	11 of 20	December 2007	B0404

M:\Projects\sthl\502(3)\bridge\Microsta\INT_BEAM.dgn 11:21:07 AM 6/2/2008

NPS NO.	REGION	STATE	PROJECT	SHEET NO.	TOTAL SHEETS
304 / 41,920	SE	TN	TEA-21 SHIL 502(3)	N-12	

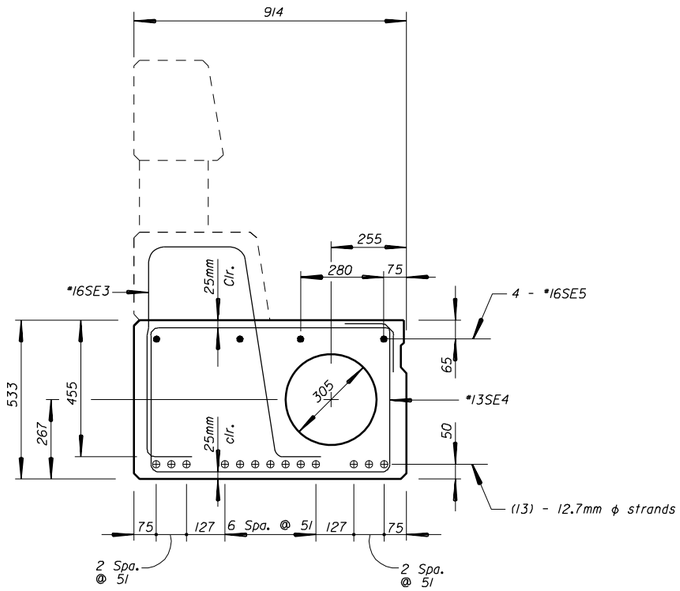

EXTERIOR BEAM TYPICAL SECTION

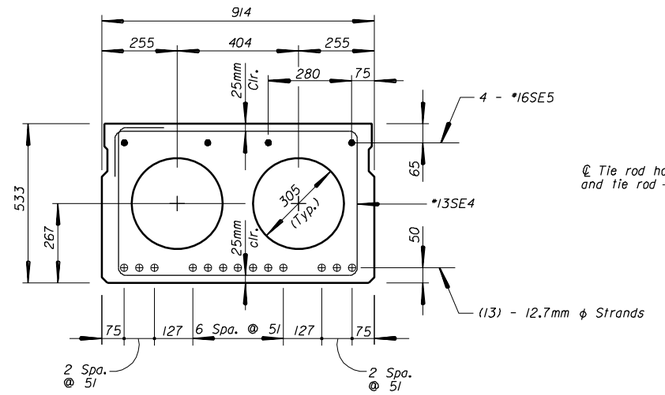

INTERIOR BEAM TYPICAL SECTION

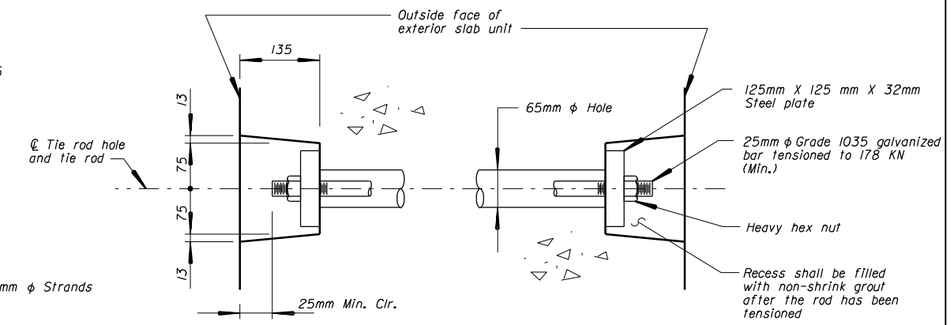

TIE ROD DETAIL

Notes:

1. Structural steel used for lateral tie rods shall conform to AASHTO M275 (ASTM A722) and shall be galvanized in accordance with AASHTO M111 (ASTM A123).
2. Cut threads on lateral tie rods to the coarse series class 2A.
3. Furnish tie rods with one heavy semifinished hexagon nut and one bearing plate at each end. Nut shall be galvanized in accordance with AASHTO M232 (ASTM A153).
4. If desired, equivalent rods with rolled threads or high-strength tendons may be substituted.

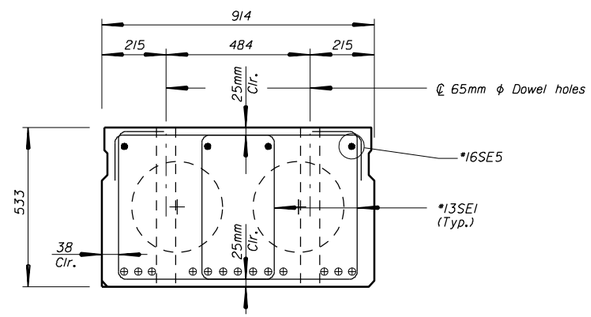

INTERIOR BEAM END SECTION

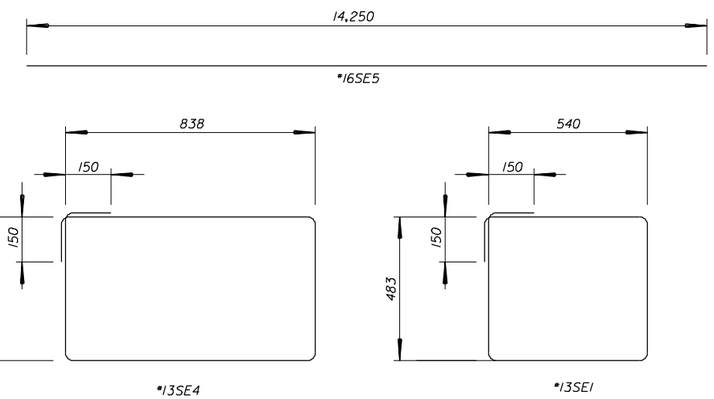

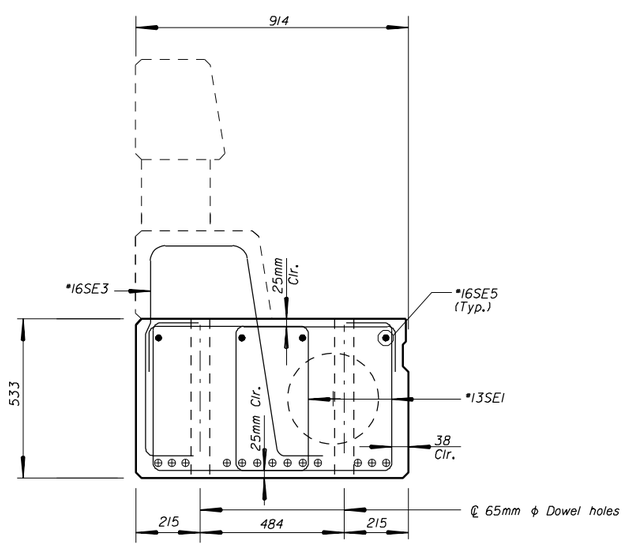

EXTERIOR BEAM END SECTION

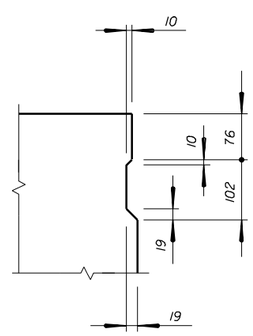

CORNER DETAIL

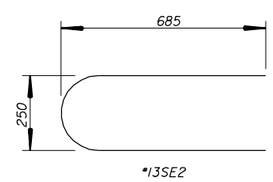

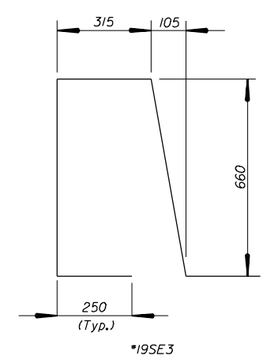

Note:

For reinforcement spacing, see "EXTERIOR SLAB UNIT" and "INTERIOR SLAB UNIT" sheets.

U.S. DEPARTMENT OF TRANSPORTATION
FEDERAL HIGHWAY ADMINISTRATION
EASTERN FEDERAL LANDS HIGHWAY DIVISION

SHILOH NATIONAL MILITARY PARK

CAVALRY ROAD

BRIDGE OVER TILGHMAN BRANCH

CORED SLAB DETAILS

NO.	DATE	BY	REVISIONS	NO.	DATE	BY	REVISIONS	DESIGNED BY	DRAWN BY	CHECKED BY	SCALE	PROJECT TEAM LEADER	BRIDGE DRAWING	DATE	DRAWING NO.
								SYP	SYP	GC	No scale	Khoa Nguyen	12 of 20	December 2007	B0404

M:\Projects\shil\502(3)\bridge\Microsta\CORED_SLAB_DET.dgn 11:17:48 AM 6/2/2008

NPS NO.	REGION	STATE	PROJECT	SHEET NO.	TOTAL SHEETS
304 / 41,920	SE	TN	TEA-21 SHIL 502(3)	N-13	

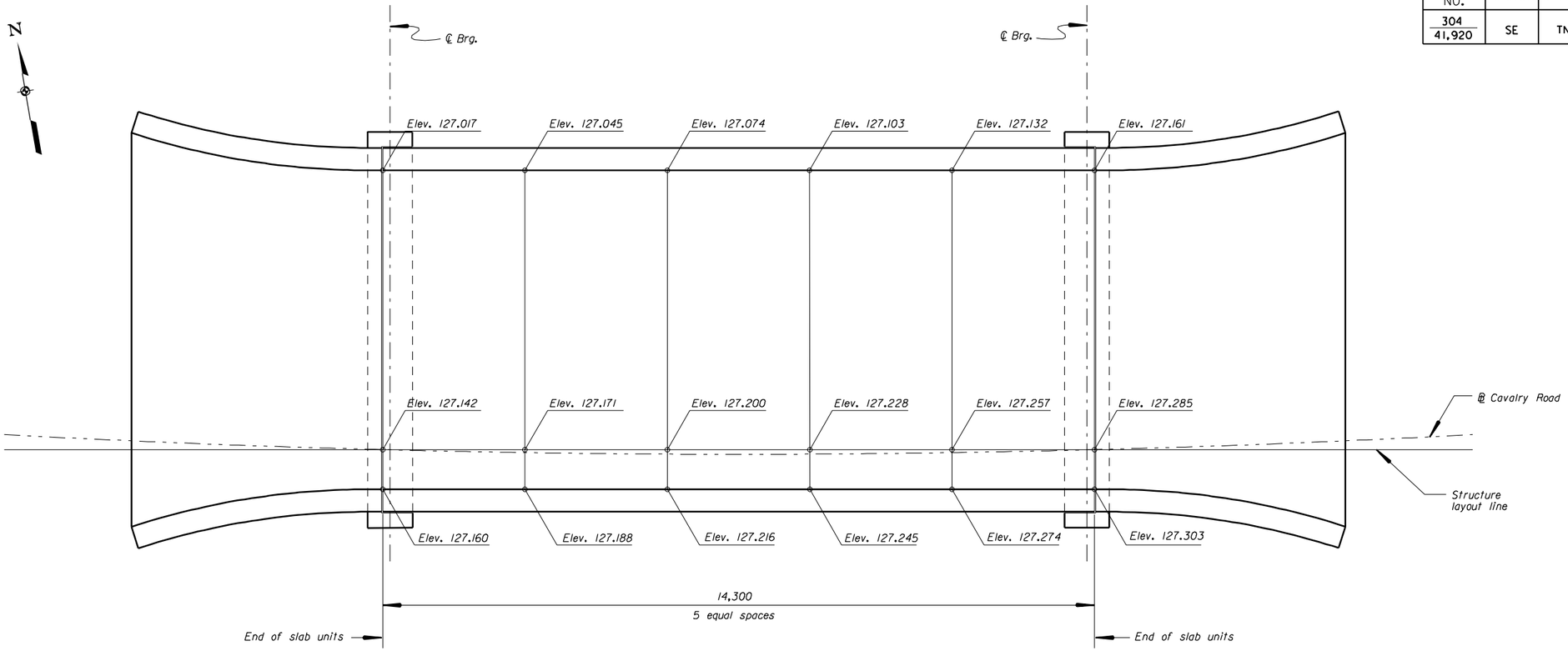

PLAN

Note:

Elevations shown are to the top of concrete overlay.

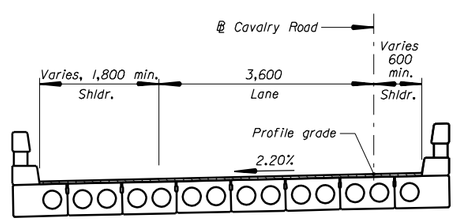

TYPICAL SECTION

U.S. DEPARTMENT OF TRANSPORTATION
FEDERAL HIGHWAY ADMINISTRATION
EASTERN FEDERAL LANDS HIGHWAY DIVISION

SHILOH NATION MILITARY PARK

CAVALRY ROAD

BRIDGE OVER TILGHMAN BRANCH

TOP OF DECK ELEVATIONS

NO.	DATE	BY	REVISIONS	NO.	DATE	BY	REVISIONS	DESIGNED BY	DRAWN BY	CHECKED BY	SCALE	PROJECT TEAM LEADER	BRIDGE DRAWING	DATE	DRAWING NO.
								SYP	SYP	GC	No scale	Khoa Nguyen	13 of 20	December 2007	B0404

M:\Projects\shil\502(3)\bridge\Microsta\DECK_ELV.dgn 11:18:44 AM 6/2/2008

NPS NO.	REGION	STATE	PROJECT	SHEET NO.	TOTAL SHEETS
304 / 41,920	SE	TN	TEA-21 SHIL 502(3)	N-14	

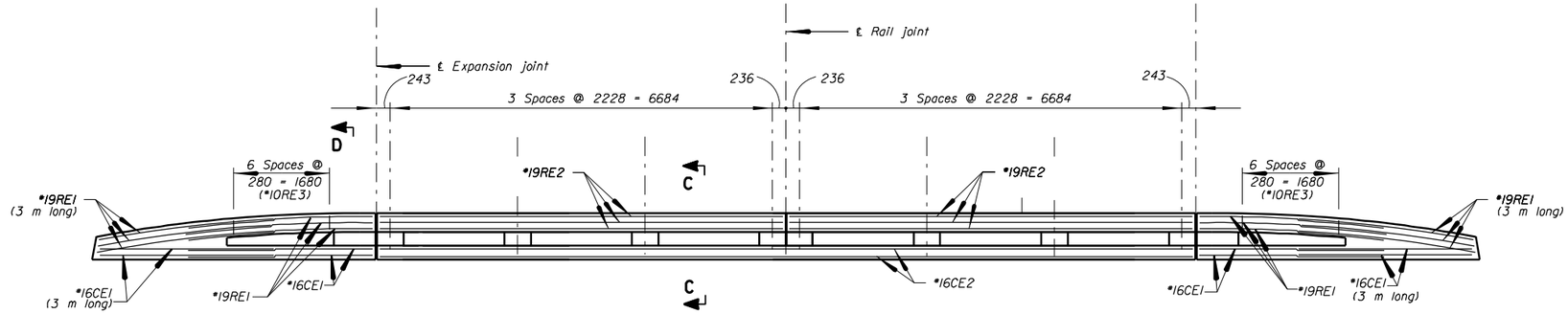

ELEVATION

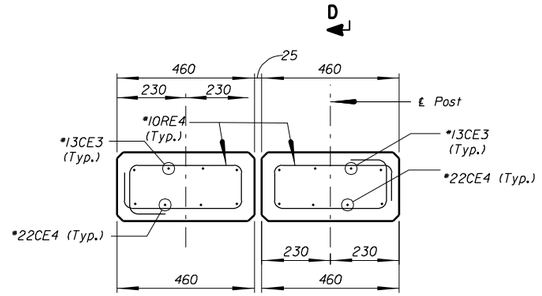

SECTION B-B

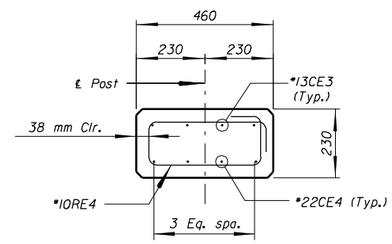

SECTION A-A

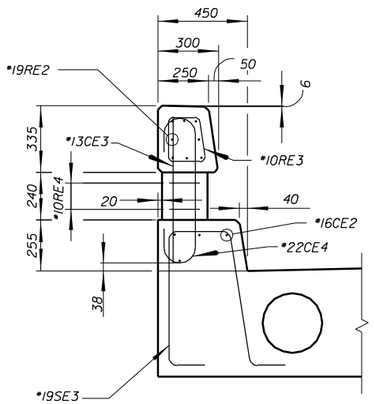

SECTION C-C

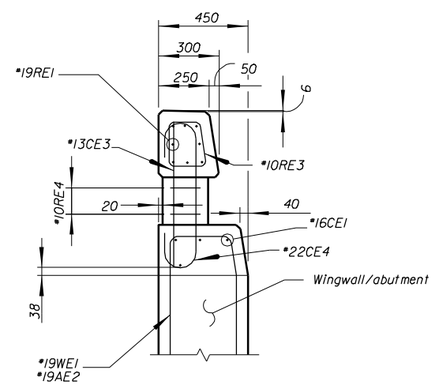

SECTION D-D

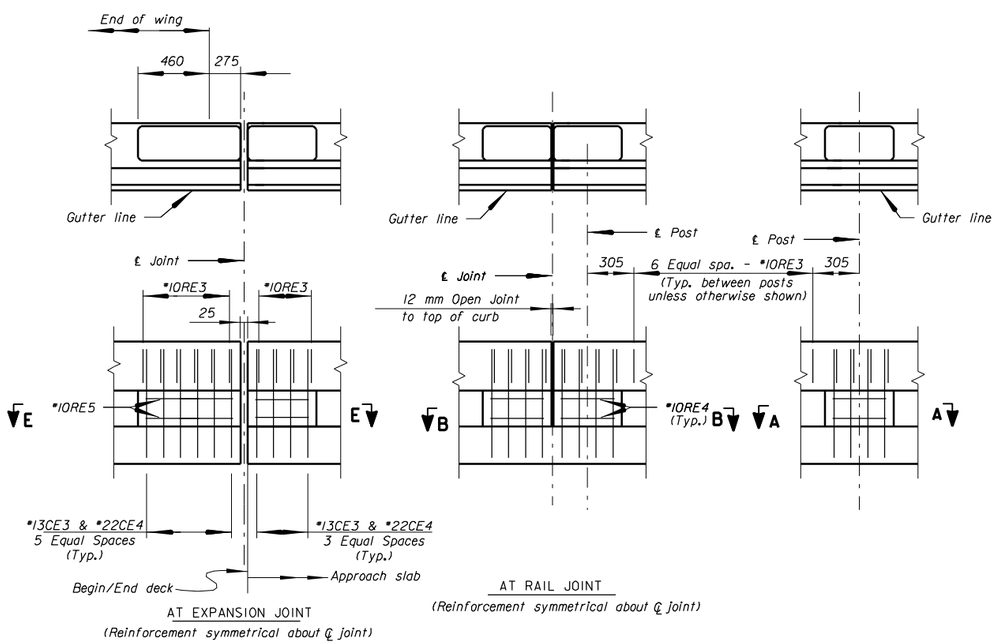

TYPICAL DETAILS
(Curb reinforcement not shown)

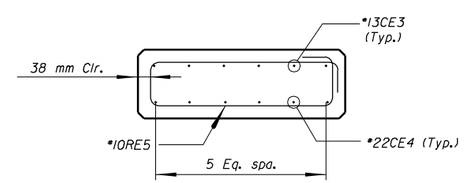

SECTION E-E

U.S. DEPARTMENT OF TRANSPORTATION
FEDERAL HIGHWAY ADMINISTRATION
EASTERN FEDERAL LANDS HIGHWAY DIVISION

SHILOH NATIONAL MILITARY PARK

CAVALRY ROAD

BRIDGE OVER TILGHMAN BRANCH

CONCRETE BRIDGE RAILING

NO.	DATE	BY	REVISIONS	NO.	DATE	BY	REVISIONS	DESIGNED BY	DRAWN BY	CHECKED BY	SCALE	PROJECT TEAM LEADER	BRIDGE DRAWING	DATE	DRAWING NO.
								SYP	BSK	GC	No scale	Khoa Nguyen	14 of 20	December 2007	B0404

6/2/2008 11:17:03 AM M:\Projects\shil\502(3)\bridge\Microsta\CONC_BRIDGE_RAIL.dgn

NPS NO.	REGION	STATE	PROJECT	SHEET NO.	TOTAL SHEETS
304 / 41,920	SE	TN	TEA-21 SHIL 502(3)	N-15	

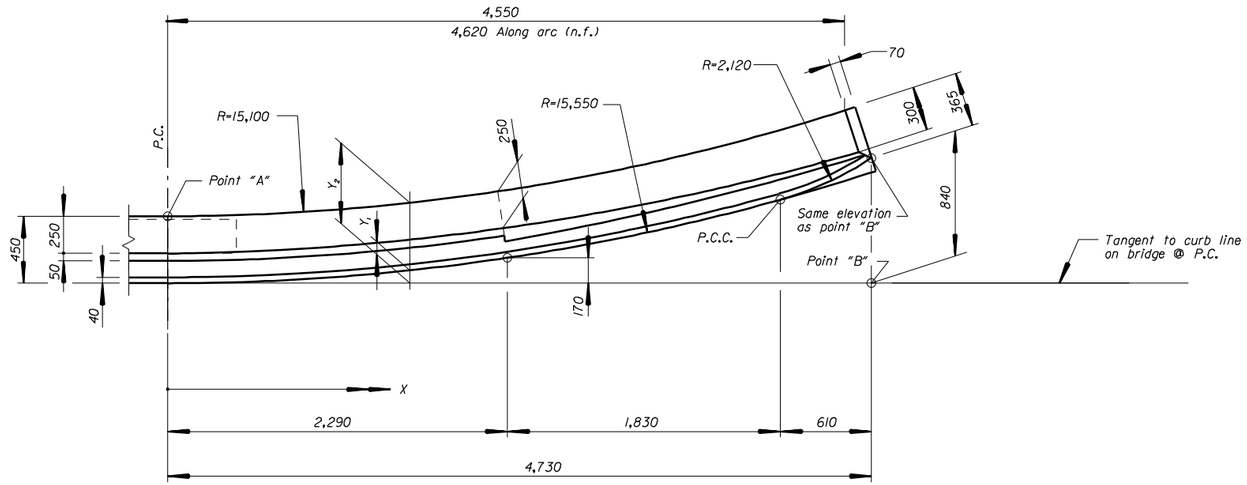

PLAN

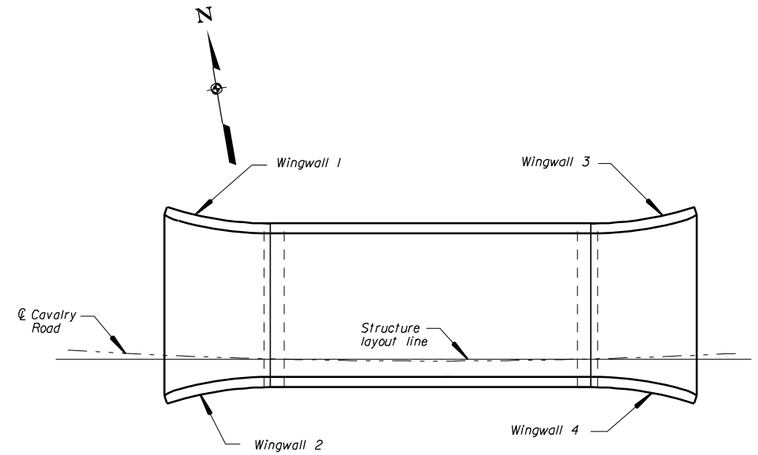

KEY
NO SCALE

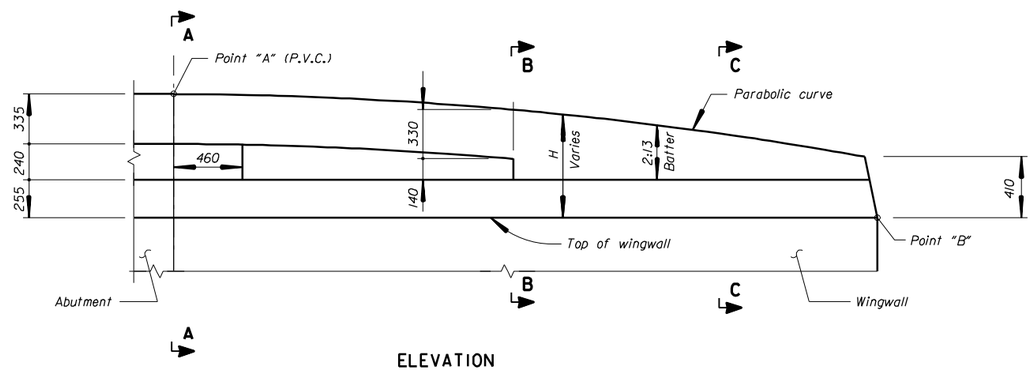

ELEVATION

PARAPET OFFSETS			
X	Y_1	Y_2	H
0	0	450	830
610	15	465	820
1220	50	505	800
1830	110	565	760
2290	170	625	720
2900	275	735	660
3350	370	835	610
3810	480	945	550
4120	560	1035	500
4270	605	1075	470
4420	670	1125	450
4550	—	1165	—
4570	745	—	420
4730	840	—	—

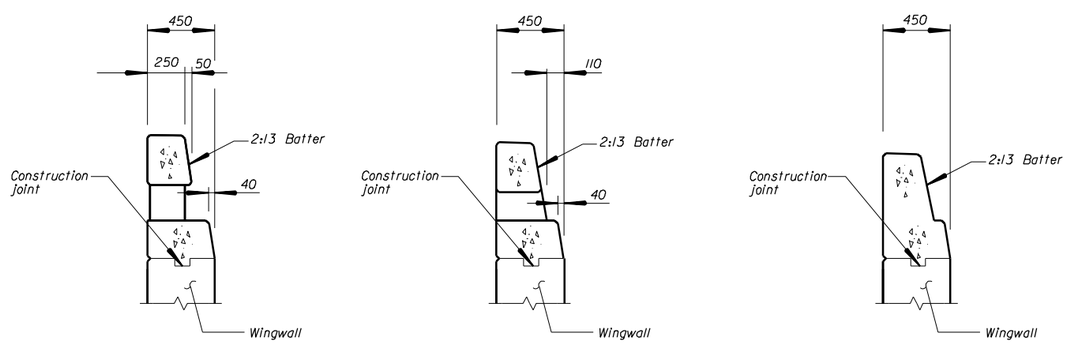

SECTION A-A

SECTION B-B

SECTION C-C

(All dimensions shown on Section A-A, B-B & C-C are radial)

Wingwall	POINT A ELEVATION	POINT B ELEVATION
1	127.794	126.920
2	127.937	127.060
3	127.944	127.160
4	128.086	127.303

Key:

n.f. = near face
f.f. = far face
e.f. = each face

U.S. DEPARTMENT OF TRANSPORTATION
FEDERAL HIGHWAY ADMINISTRATION
EASTERN FEDERAL LANDS HIGHWAY DIVISION

SHILOH NATIONAL MILITARY PARK

CAVALRY ROAD

BRIDGE OVER TILGHMAN BRANCH

END OF RAIL DETAILS

NO.	DATE	BY	REVISIONS	NO.	DATE	BY	REVISIONS	DESIGNED BY	DRAWN BY	CHECKED BY	SCALE	PROJECT TEAM LEADER	BRIDGE DRAWING	DATE	DRAWING NO.
								SYP	SYP	GC	No scale	Khoa Nguyen	15 of 20	December 2007	B0404

M:\Projects\shil\502(3)\bridge\Microsta\RAIL_END_DETS.dgn 11:24:44 AM 6/2/2008

NPS NO.	REGION	STATE	PROJECT	SHEET NO.	TOTAL SHEETS
304 / 41,920	SE	TN	TEA-21 SHIL 502(3)	N-16	

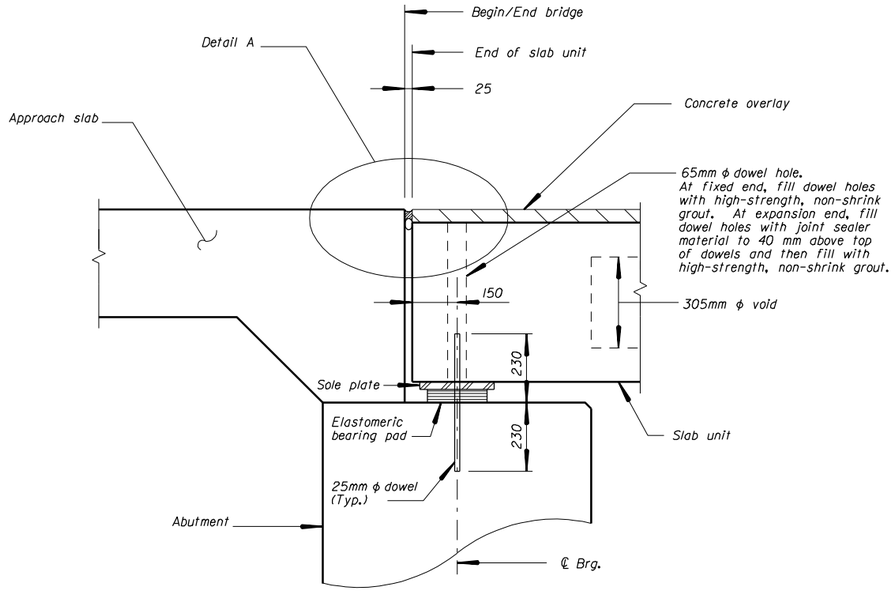

SECTION AT ABUTMENT

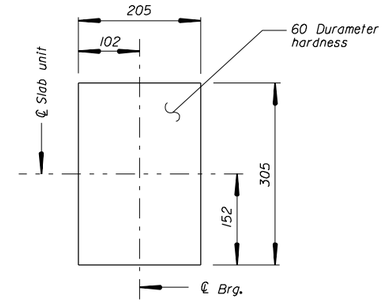

PLAN

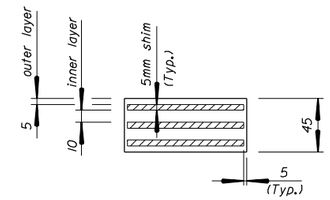

SECTION

LAMINATED ELASTOMERIC BEARING PAD

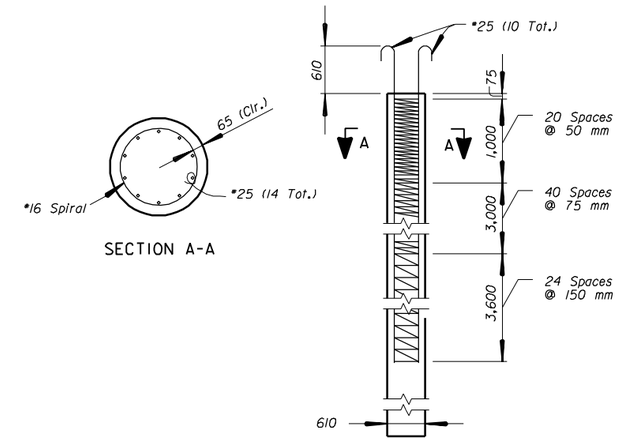

SECTION A-A

DRILLED SHAFT ELEVATION

(610 mm Diameter)

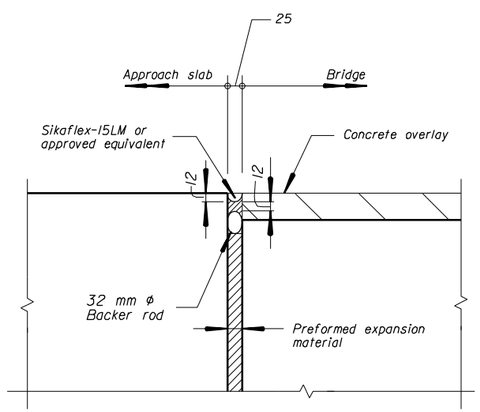

DETAIL A

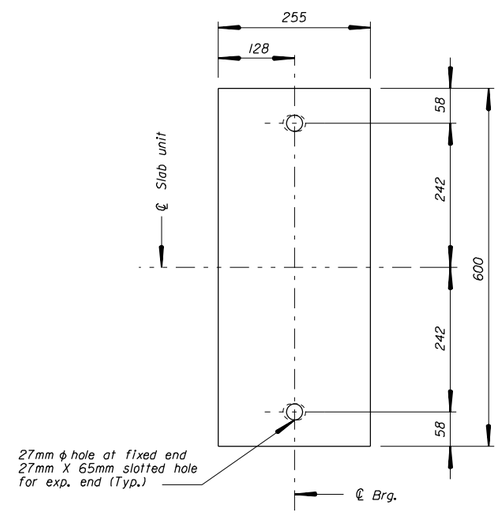

PLAN

Note:

1- Install joint sealer and compatible backer rod in accordance with the manufacturer's instructions and recommendations.

2- Backer rod, preformed expansion material and joint sealer are included in the cost of " Approach Slab".

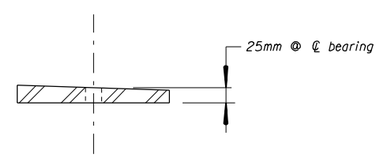

SECTION

SOLE PLATE

U.S. DEPARTMENT OF TRANSPORTATION
FEDERAL HIGHWAY ADMINISTRATION
EASTERN FEDERAL LANDS HIGHWAY DIVISION

SHILOH NATIONAL MILITARY PARK

CAVALRY ROAD

BRIDGE OVER TILGHAMN BRANCH

MISCELLANEOUS DETAILS

NO.	DATE	BY	REVISIONS	NO.	DATE	BY	REVISIONS	DESIGNED BY	DRAWN BY	CHECKED BY	SCALE	PROJECT TEAM LEADER	BRIDGE DRAWING	DATE	DRAWING NO.
								SYP	SYP	GC	No scale	Khoa Nguyen	16 of 20	December 2007	B0404

M:\Projects\shil\502(3)\bridge\Microsta\MISC-DET.dgn 11:21:58 AM 6/2/2008

NPS NO.	REGION	STATE	PROJECT	SHEET NO.	TOTAL SHEETS
304 / 41,920	SE	TN	TEA-21 SHIL 502(3)	N-17	

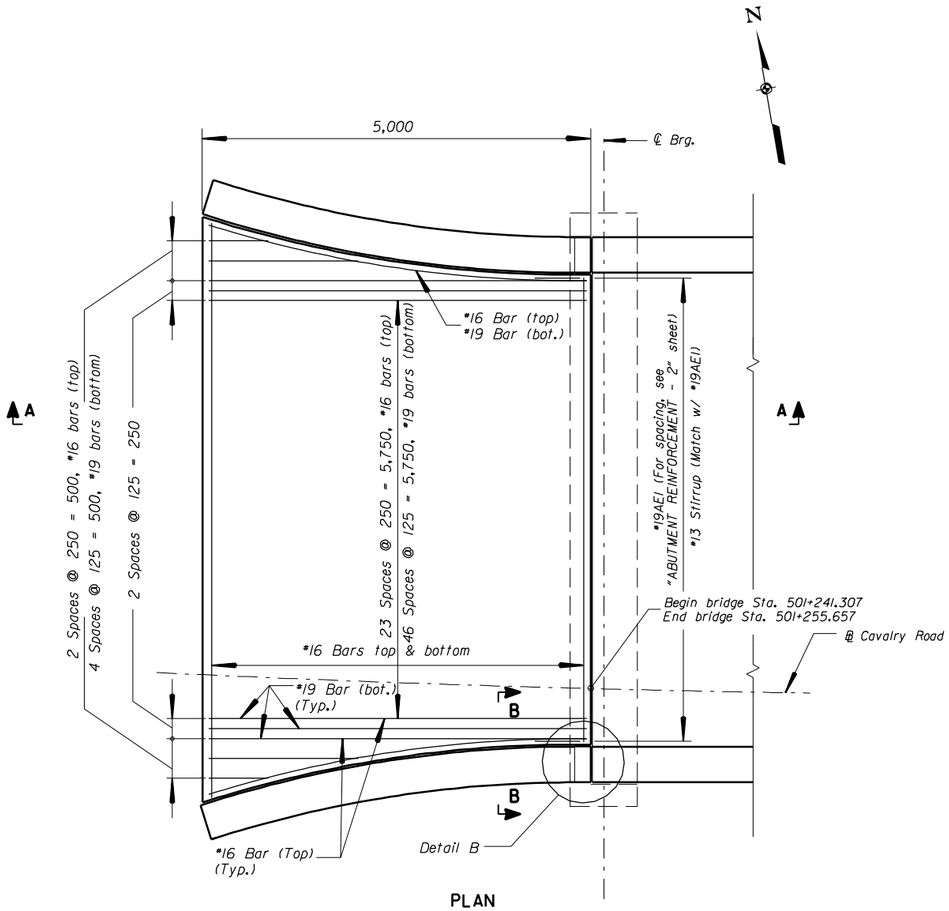

PLAN

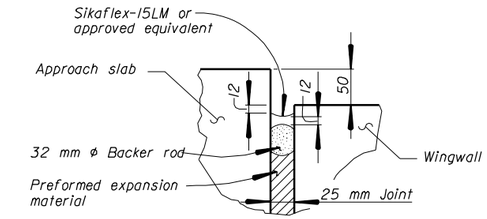

DETAIL A

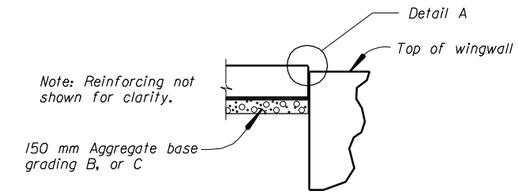

SECTION B-B

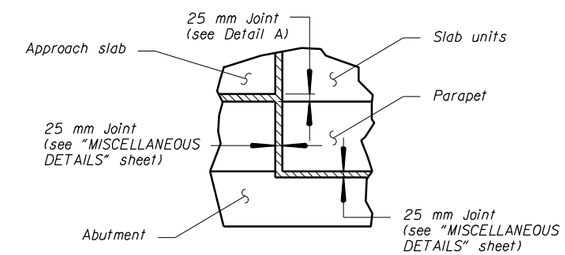

DETAIL B

Notes:

1. *Felt roofing paper shall be 27 kg single layer or 13.5 kg double layer.*
2. *Reinforcing steel for approach slabs shall be epoxy coated.*
3. *All approach slab concrete shall be Class D (AE).*
4. *Polyethylene shall conform with ASTM D 2103.*
5. *Polyethylene sheet, roofing paper, aggregate base, backer rod, preformed expansion material and joint sealer are included in the cost of "Approach Slab".*

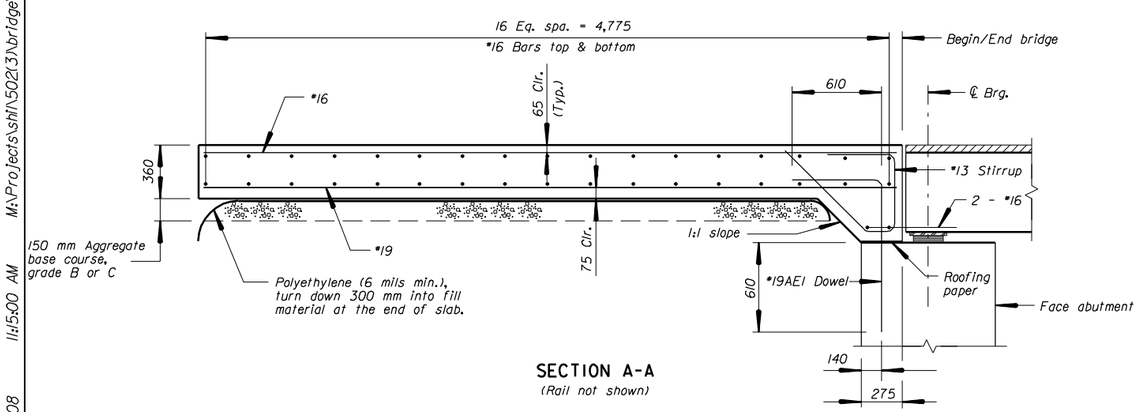

SECTION A-A
(Rail not shown)

Estimated Quantities	
One Approach Slab	
Concrete	13.5 m^3
Epoxy reinf. steel	1350 Kg

U.S. DEPARTMENT OF TRANSPORTATION
FEDERAL HIGHWAY ADMINISTRATION
EASTERN FEDERAL LANDS HIGHWAY DIVISION

SHILOH NATIONAL MILITARY PARK

CAVALRY ROAD

BRIDGE OVER TILGHMAN BRANCH

APPROACH SLAB

NO.	DATE	BY	REVISIONS	NO.	DATE	BY	REVISIONS	DESIGNED BY	DRAWN BY	CHECKED BY	SCALE	PROJECT TEAM LEADER	BRIDGE DRAWING	DATE	DRAWING NO.
								SYP	SYP	GC	No scale	Khoa Nguyen	17 of 20	December 2007	B0404

M:\Projects\shil\502(3)\bridge\Microsta\APPR.dgn 11:15:00 AM 6/2/2008

NPS NO.	REGION	STATE	PROJECT	SHEET NO.	TOTAL SHEETS
304 / 41,920	SE	TN	TEA-21 SHIL 502(3)	N-18	

REINFORCING STEEL SCHEDULE

ABUTMENT REINFORCEMENT - BLACK

BAR MK	QTY	PL	SIZE	NO EA.	LENGTH	WEIGHT	LOCATION	PLACING NOTES
22A1			22mm					
16A2			16mm					
16A3			16mm					
19A4			19mm					
16A5			16mm					
19A6			19mm					
16A7			16mm					
19A8			19mm					
16A9			16mm					
19A10			19mm					
16A11			16mm					
19A12			19mm					
16A13			16mm					
16A14			16mm					
16A15			16mm					
19A16			19mm					
16A17			16mm					
19A18			19mm					
16A19			16mm					
19A20			19mm					
16A21			16mm					
19A22			19mm					
16A23			16mm					
19A24			19mm					
	TOTAL WEIGHT FOR RELEASE:						Kgs	

BAR MK	TYP	A	B	C	D	E	F	G	H	J	K	O
22A1												
16A2												
16A3												
19A4	2											
16A5												
19A6												
16A7												
19A8												
16A9												
19A10												
16A11	16											
19A12	16											
16A13	17											
16A14	T 1											
16A15	2											
19A16	2											
16A17	16											
19A18	16											
16A19												
19A20												
16A21												
19A22												
16A23												
19A24												

WINGWALL REINFORCEMENT - BLACK

BAR MK	QTY	PL	SIZE	NO EA.	LENGTH	WEIGHT	LOCATION	PLACING NOTES
16W1			16mm					
19W2			19mm					
16W3			16mm					
			VARYING					
19W4			19mm					
			VARYING					
16W5			16mm					
19W6			19mm					
16W7			16mm					
			VARYING					
16W8			16mm					
			VARYING					
19W9			19mm					
			VARYING					
16W10			16mm					
			VARYING					
16W11			16mm					
19W12			19mm					
16W13			16mm					
16W14			16mm					
	TOTAL WEIGHT FOR RELEASE:						Kgs	

BAR MK	TYP	A	B	C	D	E	F	G	H	J	K	O
16W1												
19W2												
16W3												
16W3												
19W4												
19W4												
16W5												
19W6												
16W7												
16W7												
16W8												
16W8												
19W9												
19W9												
16W10												
16W10												
16W11												
19W12												
16W13	17											
16W14												

BENDING DIAGRAMS

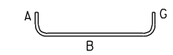

TYPE 2

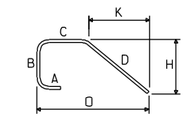

TYPE 16

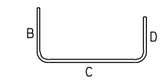

TYPE 17

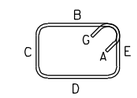

TYPE T1

Notes:

Dimensions in bending diagrams are out - to - out of bars.

Reinforcing bar list shall be completed and submitted in accordance with Section 554.03.

The contractor shall use the same respective bar marks for reinforcing steel labeling as shown in the contract plans.

Straight bars have no "TYP" designation.

U.S. DEPARTMENT OF TRANSPORTATION
FEDERAL HIGHWAY ADMINISTRATION
EASTERN FEDERAL LANDS HIGHWAY DIVISION

SHILOH NATIONAL MILITARY PARK

CALVARY ROAD
BRIDGE OVER TILGHMAN BRANCH

REINFORCING STEEL BAR LIST

NO.	DATE	BY	REVISIONS	NO.	DATE	BY	REVISIONS	DESIGNED BY	DRAWN BY	CHECKED BY	SCALE	PROJECT TEAM LEADER	BRIDGE DRAWING	DATE	DRAWING NO.
								SYP	BSK	GC	No scale	Khoa Nguyen	18 of 20	December 2007	B0404

6/2/2008 11:49:37 AM M:\Projects\shil\502(3)\bridge\Microsta\BLKREBAR.dgn

NPS NO.	REGION	STATE	PROJECT	SHEET NO.	TOTAL SHEETS
304 / 41,920	SE	TN	TEA-21 SHIL 502(3)	P-19	

REINFORCING STEEL SCHEDULE

ABUTMENT REINFORCEMENT - EPOXY

BAR MK	QTY	PL SIZE	NO EA.	LENGTH	WEIGHT	LOCATION	PLACING NOTES
19AE1		19mm					
19AE2		19mm					
TOTAL WEIGHT FOR RELEASE:						Kgs	

WINGWALL REINFORCEMENT - EPOXY

BAR MK	QTY	PL SIZE	NO EA.	LENGTH	WEIGHT	LOCATION	PLACING NOTES
19WE1		19mm					
16WE2		16mm					
16WE3		16mm					
TOTAL WEIGHT FOR RELEASE:						Kgs	

CURB REINFORCEMENT - EPOXY

BAR MK	QTY	PL SIZE	NO EA.	LENGTH	WEIGHT	LOCATION	PLACING NOTES
16CE1		16mm					
16CE2		16mm					
13CE3		13mm					
22CE4		22mm					
TOTAL WEIGHT FOR RELEASE:						Kgs	

RAIL REINFORCEMENT - EPOXY

BAR MK	QTY	PL SIZE	NO EA.	LENGTH	WEIGHT	LOCATION	PLACING NOTES
19RE1		19mm					
19RE2		19mm					
10RE3		10mm					
10RE4		10mm					
10RE5		10mm					
TOTAL WEIGHT FOR RELEASE:						Kgs	

DIMENSION TABLE

BAR MK	TYP	A	B	C	D	E	F	G	H	J	K	O
19AE1	17											
19AE2	H03											
19WE1	H03											
16WE2	H 1											
16WE3	19											
16CE1												
16CE2												
13CE3												
22CE4	1											
19RE1												
19RE2												
10RE3	T 7											
10RE4	T 2											
10RE5	T 2											

BENDING DIAGRAMS

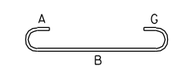

TYPE 1

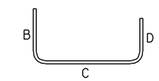

TYPE 17

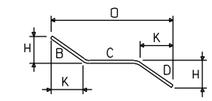

TYPE 19

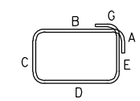

TYPE T2

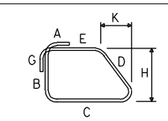

TYPE T7

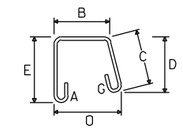

TYPE H1

Notes:

Dimensions in bending diagrams are out - to - out of bars.

Reinforcing bar list shall be completed and submitted in accordance with Section 554.03.

The contractor shall use the same respective bar marks for reinforcing steel labeling as shown in the contract plans.

Straight bars have no "TYP" designation.

U.S. DEPARTMENT OF TRANSPORTATION
FEDERAL HIGHWAY ADMINISTRATION
EASTERN FEDERAL LANDS HIGHWAY DIVISION

SHILOH NATIONAL MILITARY PARK

CALVARY ROAD
BRIDGE OVER TILGHMAN BRANCH

EPOXY COATED REINFORCING STEEL BAR LIST

NO.	DATE	BY	REVISIONS	NO.	DATE	BY	REVISIONS

DESIGNED BY	DRAWN BY	CHECKED BY	SCALE	PROJECT TEAM LEADER	BRIDGE DRAWING	DATE	DRAWING NO.
SYP	BSK	GC	No scale	Khoa Nguyen	19 of 20	December 2007	B0404

6/2/2008 11:53:30 AM M:\Projects\shil\502(3)\bridge\Microsta\EPXYREBAR.dgn

NPS NO.	REGION	STATE	PROJECT	SHEET NO.	TOTAL SHEETS
304 / 41,920	SE	TN	TEA-21 SHIL 502(3)	N-20	

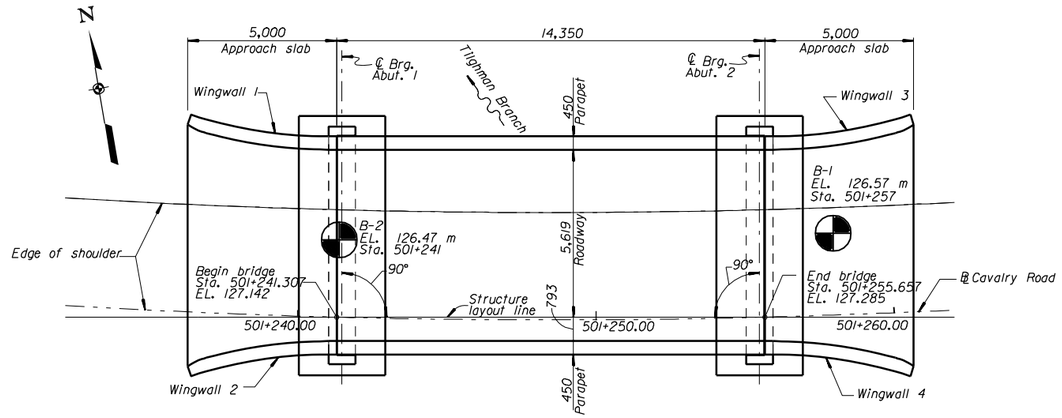

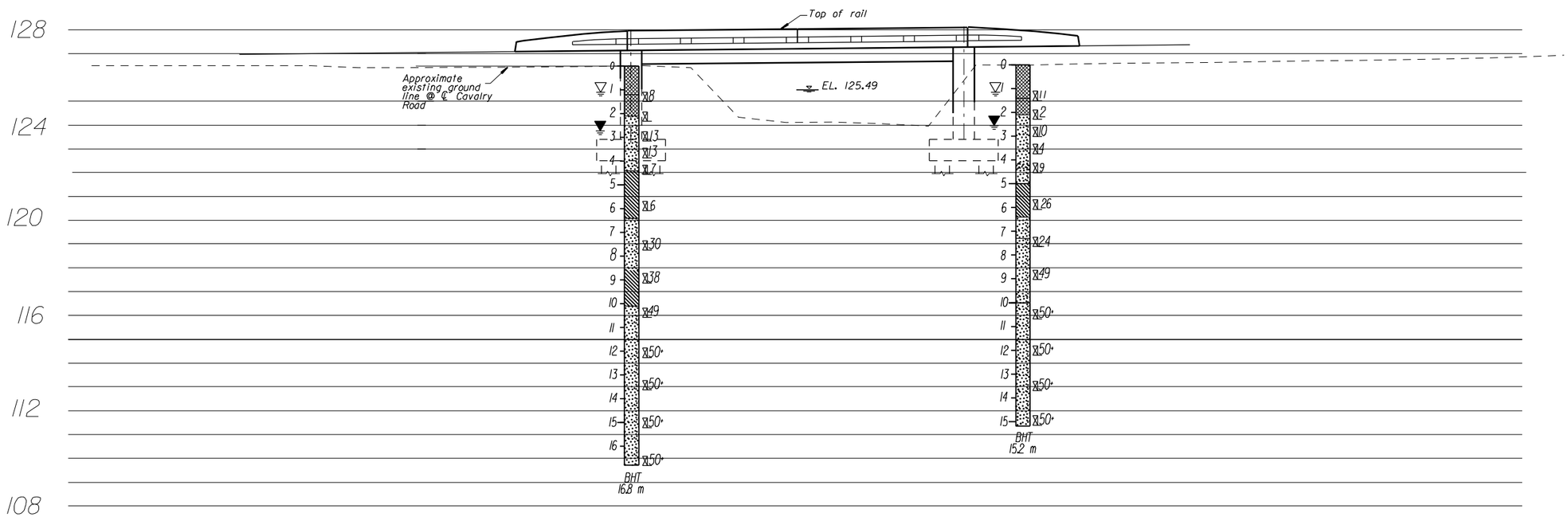

BRIDGE DRAWING
20 of 20

SYMBOL	TYPE OF MATERIAL	SYMBOL	TYPE OF MATERIAL
	FILL		
	SAND		
	CLAY		

TEST BORING

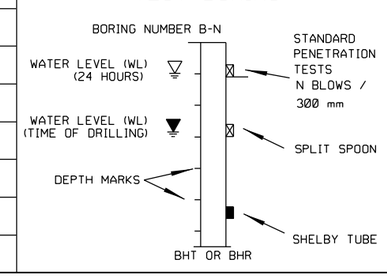

MISCELLANEOUS

1. SPT-STANDARD PENETRATION TEST -AASHTO T206-74
2. R-REFUSAL, SPT 100 BLOWS/300 mm
3. CR%-PERCENT OF RECOVERY
4. RQD-ROCK QUALITY DESIGNATION
5. BHT-BORE HOLE TERMINATED
6. BHR-BORE HOLE REFUSAL
7. GEOPHYSICAL TEST SITE: SEISMIC (S) RESISTIVITY (R)

SCALE

0 2 5
SCALE IN METERS

U. S. DEPARTMENT OF TRANSPORTATION
FEDERAL HIGHWAY ADMINISTRATION
EASTERN FEDERAL LANDS HIGHWAY DIVISION

BORING LOCATION PLAN AND SUBSURFACE PROFILE

Shiloh National Military Park
Hardin County, TN

TEA-21/PRA-SHIL 502(2)

Tilghman Bridge