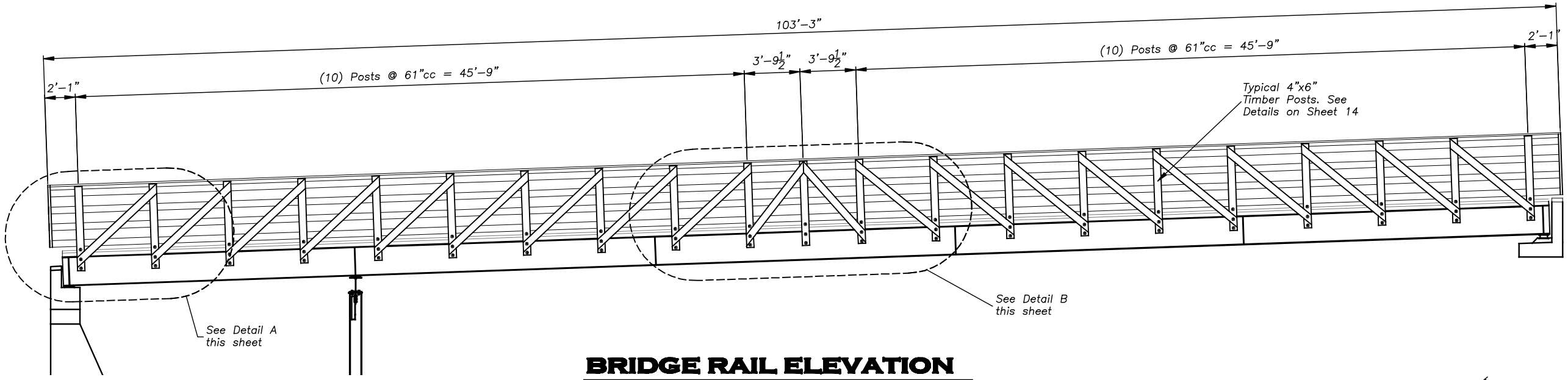

BRIDGE RAIL ELEVATION

Scale: 1/8" = 1'-0"

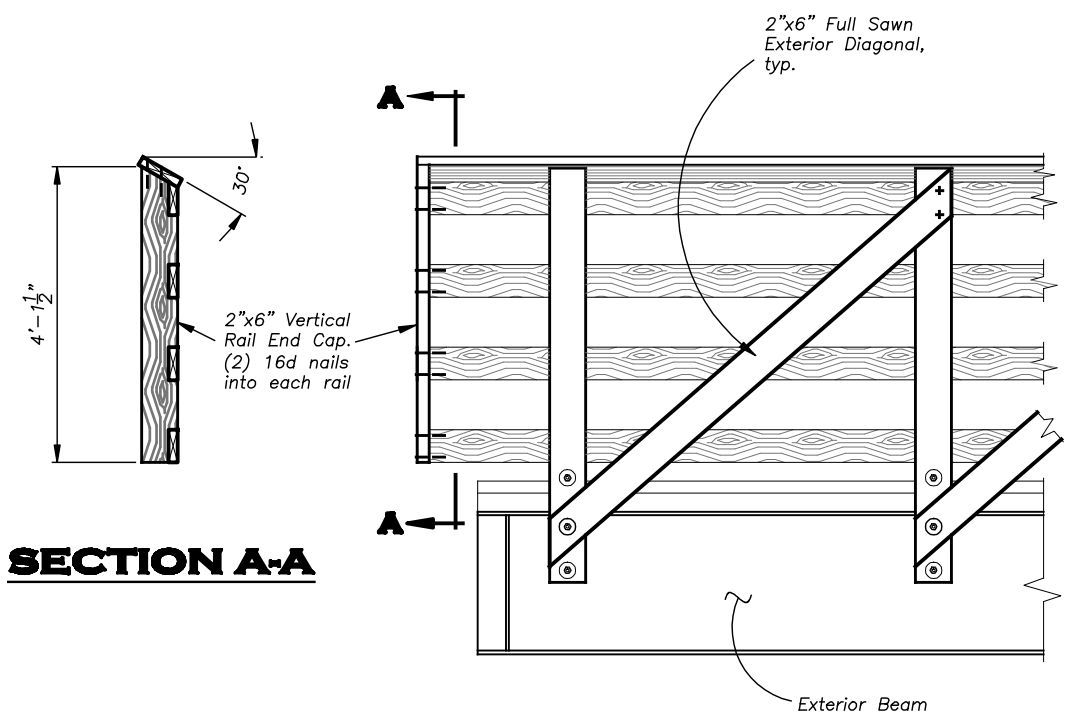

SECTION A-A

DETAIL A

Scale: 3/8" = 1'-0"

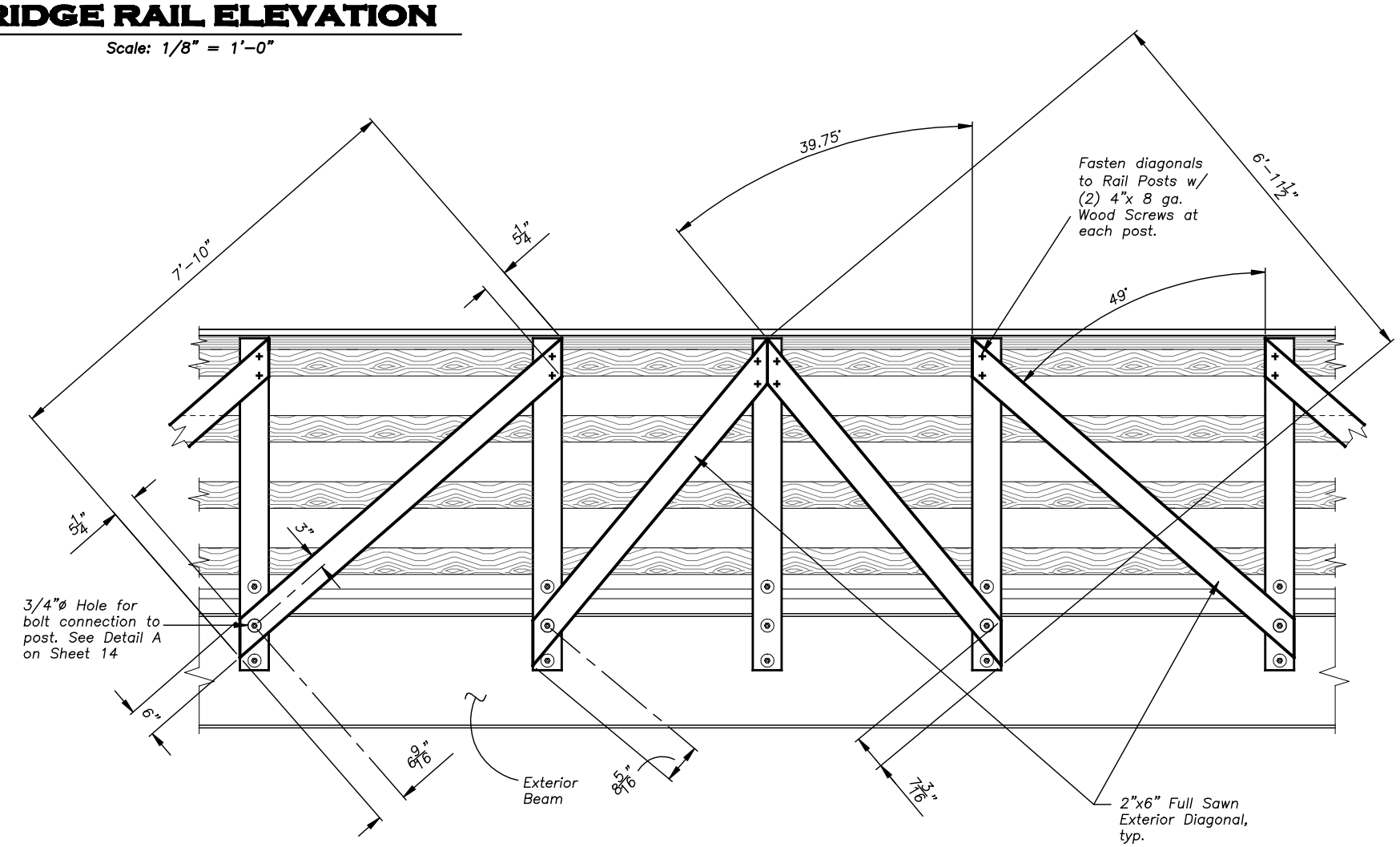

DETAIL B

Scale: 3/8" = 1'-0"

BY	DATE	REVISION DESCRIPTION

DESIGN CT PROJ. NO. 5282
DRAWN CT DATE MAY 07
CHECKED MJ SURVEYED DJ&A

DJ&A, P.C.
CONSULTING ENGINEERS & LAND SURVEYORS

USFS - CLEARWATER N.F.
COLT CREEK CABIN TRAIL
BRIDGE REPLACEMENT

BRIDGE RAIL
LAYOUT AND DETAILS

SHEET 13 OF 14