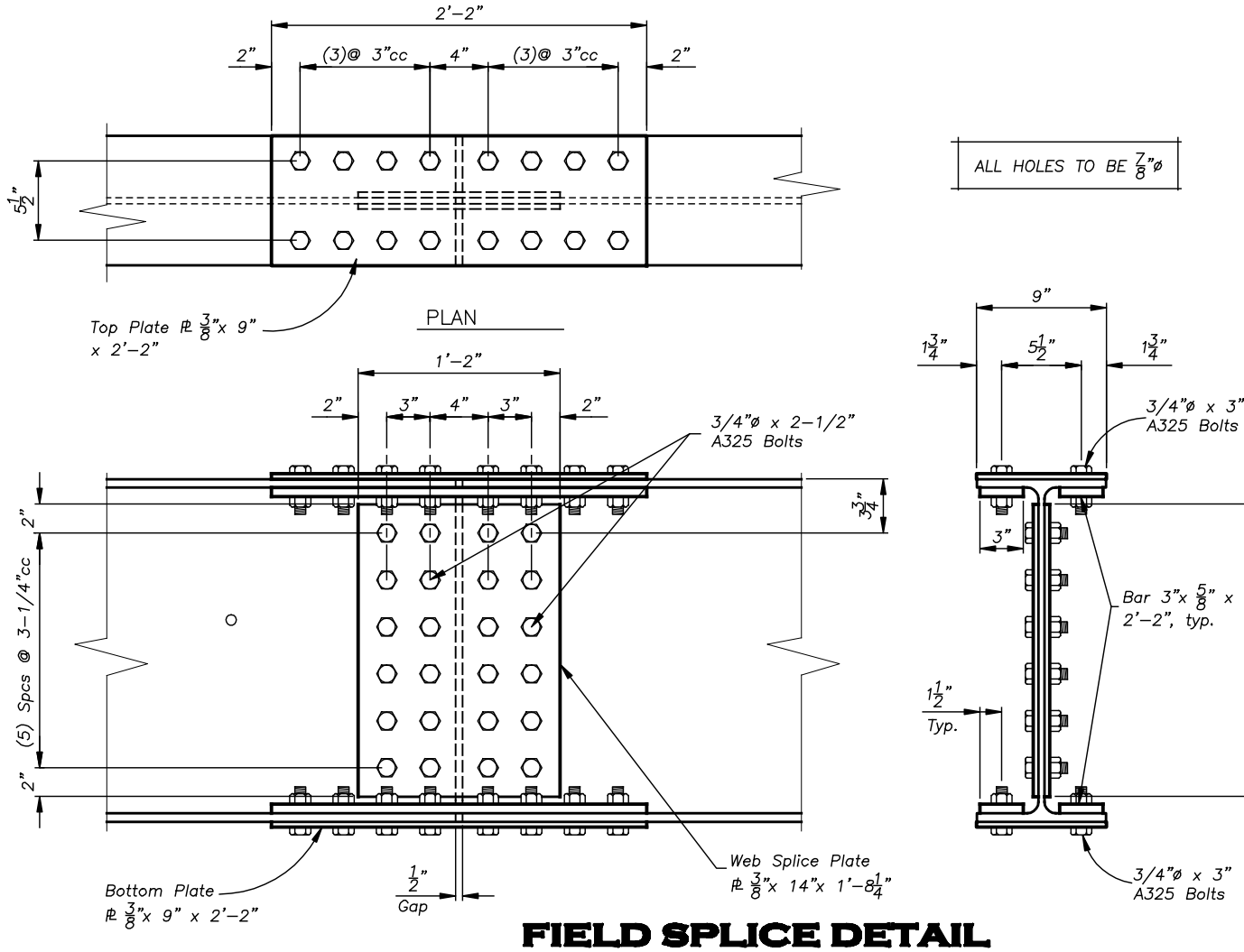

ALL HOLES TO BE 7/8"ø

FIELD SPLICE DETAIL

Scale: 1" = 1'-0"

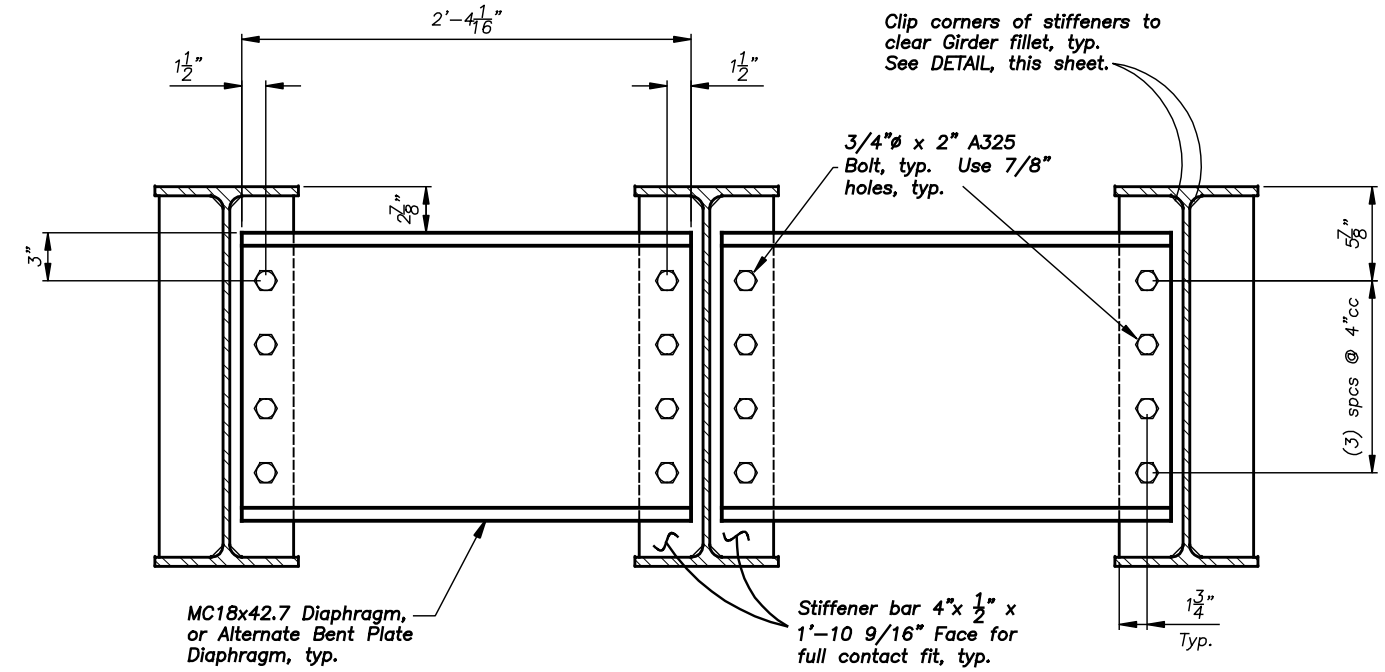

DIAPHRAGM DETAIL

Scale: 1" = 1'-0"

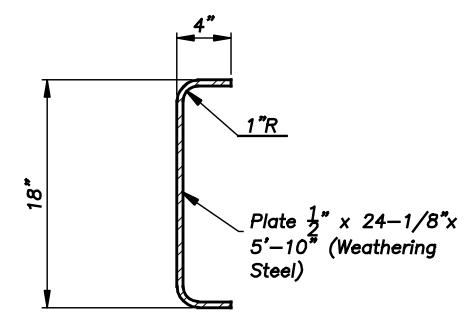

ALTERNATE DIAPHRAGM

Not to Scale

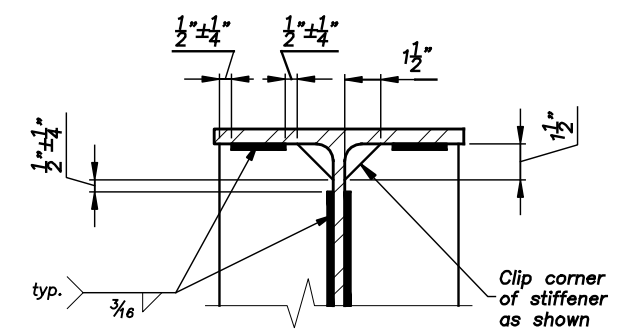

STIFFENER DETAIL

Not to Scale

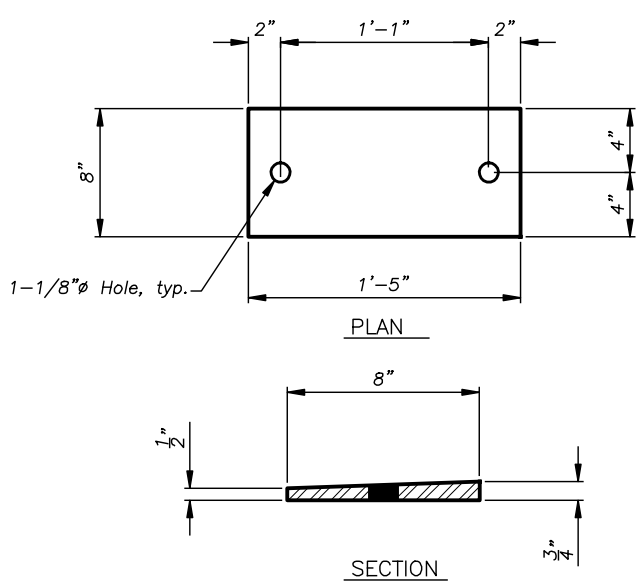

TAPERED SOLE PLATE (ABUT. 1 & PIER 1)

(6) REQUIRED – SHIP LOOSE

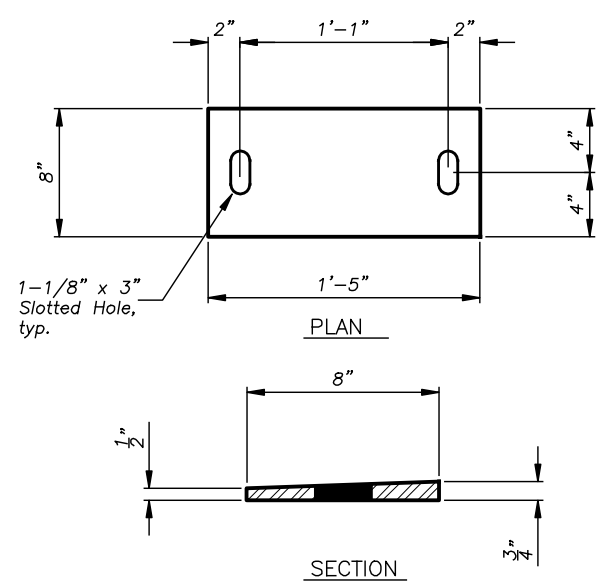

TAPERED SOLE PLATE (ABUT. 2)

(3) REQUIRED – SHIP LOOSE

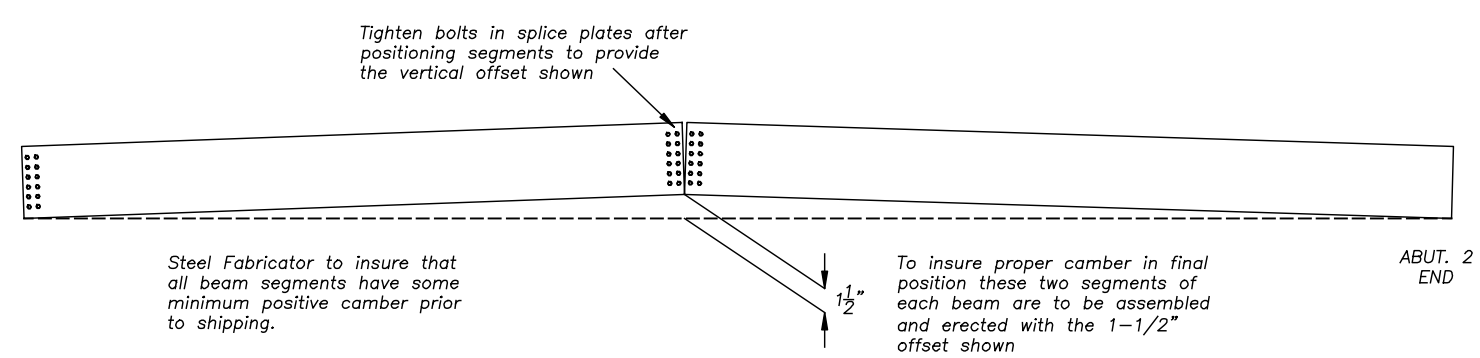

BEAM ERECTION DETAIL

Not to Scale

BY	DATE	REVISION DESCRIPTION

DESIGN CT PROJ. NO. 5282
DRAWN CT DATE FEB., 2008
CHECKED MJ SURVEYED DJ&A

DJ&A, P.C.
CONSULTING ENGINEERS & LAND SURVEYORS
3000 Pierce Street, Missoula, Montana 59804-7832
Phone 406/721-4285 Fax 406/543-6471

USFS - CLEARWATER N.F.
COLT CREEK CABIN TRAIL
BRIDGE REPLACEMENT

BEAM DETAILS

SHEET 11 OF 14