Building 2071 Floor Plan

This drawing is the property of Control Solutions Northwest. The information contained hereon is confidential and will neither be reproduced in whole or in part nor disclosed to other parties except as authorized by Control Solutions Northwest.

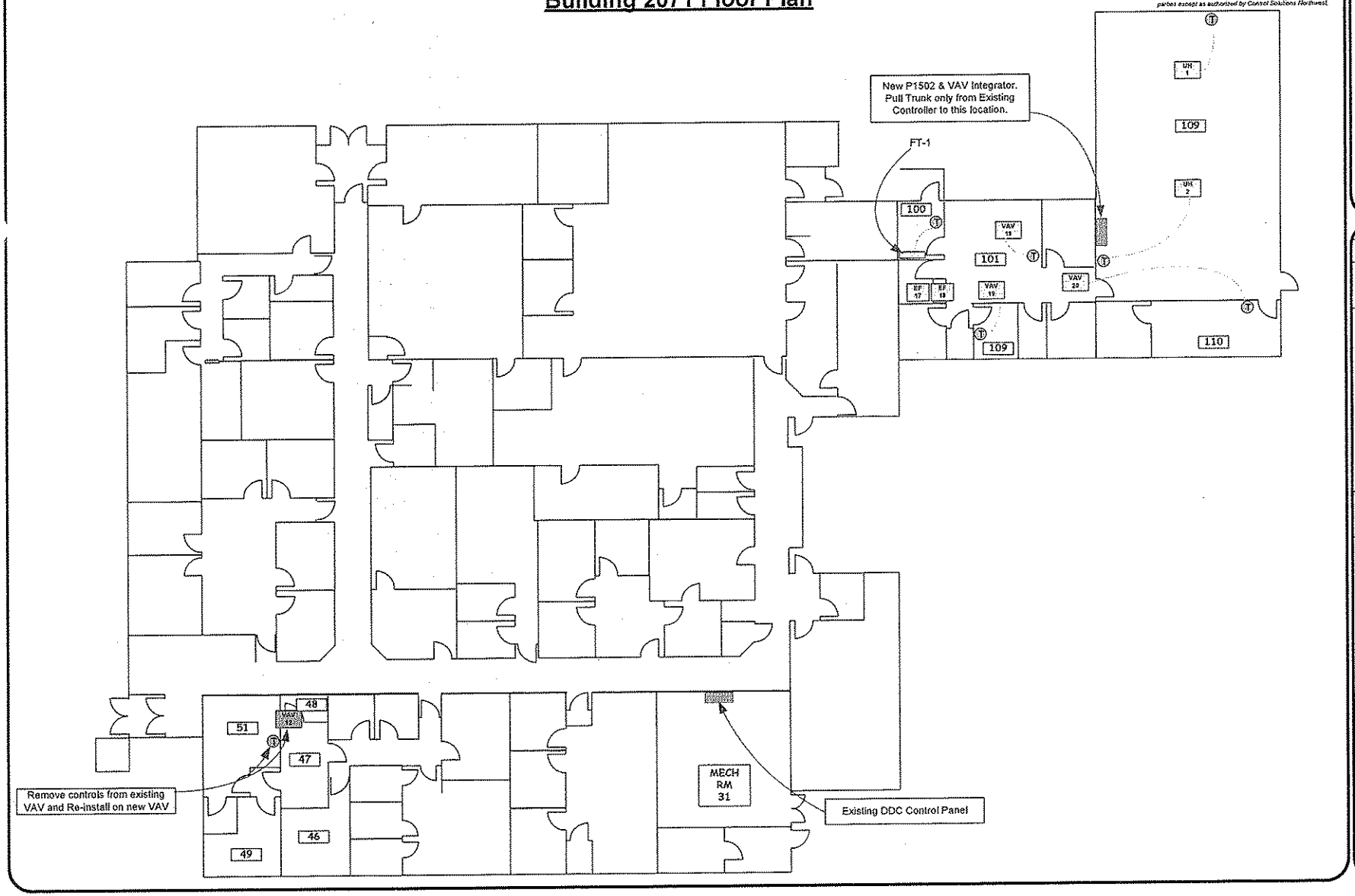

Control Solutions Northwest, Inc.
7222 E. Nora Ave.
Spokane, WA 99212
Phone: 509/892-1121
FAX: 509/892-1135
info@controlsolutionsnw.com

REV.	DESCRIPTION	DATE	BY
A	Submittals	11-19-03	JN
B	As-Built Drawings	12-22-04	JN

DESCRIPTION	Building 2071 Floor Plan
PROJECT NAME:	FAFB Building 2071
ADDRESS:	Fairchild AFB
LOCATION:	
ENGINEER:	
CONTRACTOR:	Pro Heating & A/C, Inc
ENG'D BY:	Jeff Nelson
DRAWN BY:	Jeff Nelson
DATE	11/19/03
FILENAME	2071 BY MS.VSD

Job Number 4103-061

Print 08/19/06
Last Edit 08/19/06
PAGE 3 OF 12

This drawing is the property of Control Solutions Northwest. The information contained herein is confidential and will neither be reproduced in whole or in part nor disclosed to other parties except as authorized by Control Solutions Northwest.

DDC Network Layout

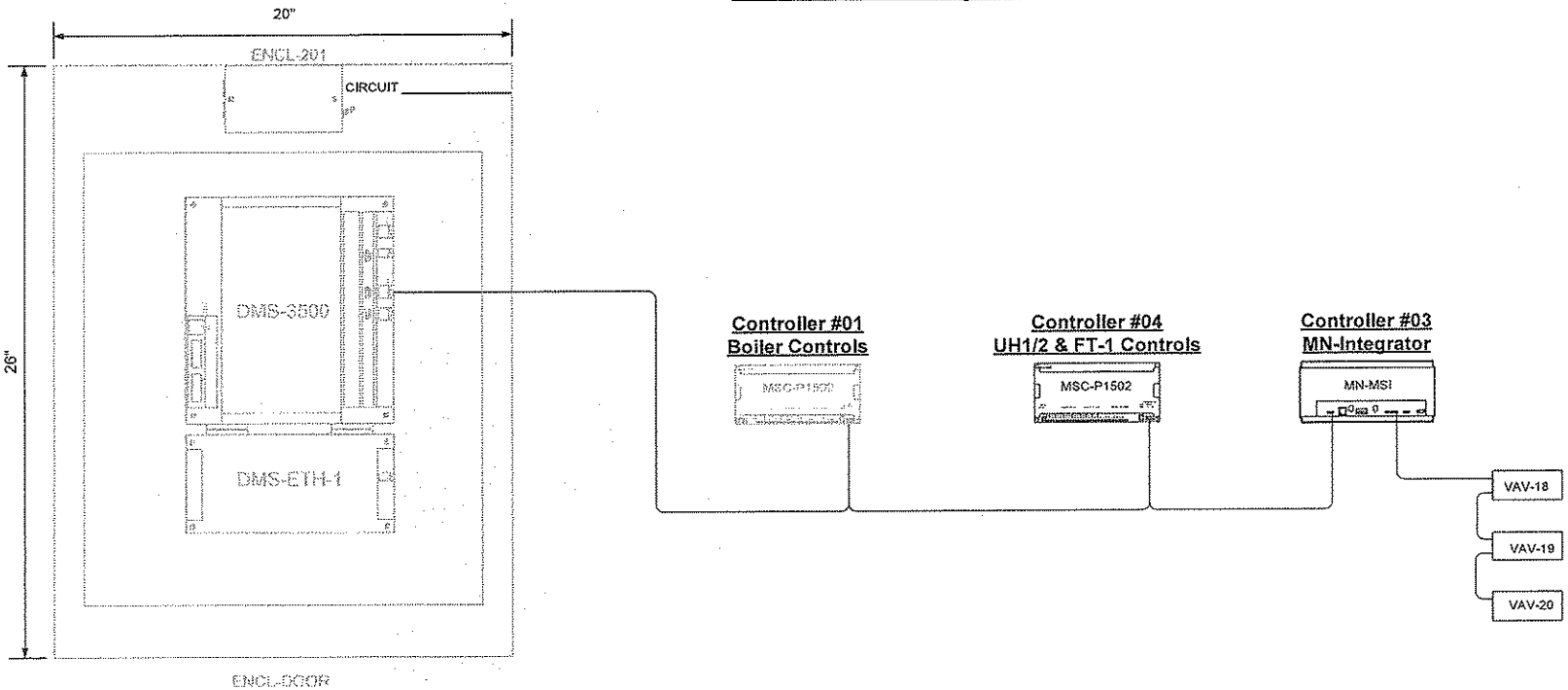

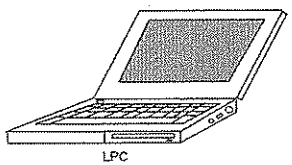

Win 98, Pentium III 450 Mhz, 64MB RAM, 6GB HD, 24X CDROM, 56K Modem Laptop w/Protective Carrying Case

Bill of Materials - Existing DDC Controls

BOM Tag	Part Number	Device	Qty
DMS-3500	DMS-3500	Area Controller	1
ENCL-201	ENCL-201-TUB	24"X32"X8" NEMA 1 Enclosure w/Xfmr/Backplate	1
ENCL-DOOR	ENCL-DOOR-PLA	Locking Door for ENCL-201-TUB	1
ETH-NIM	DMS-ETH-1	Area Controller Ethernet Adapter	1
MSC-P-1502	MSC-P1502	Controller - Equip	1

Bill of Materials - CSN Provided Devices

BOM Tag	Part Number	Device	Qty	Order Notes
LPC		Laptop PC	1	

Control Solutions Northwest, Inc.
7222 E. Nora Ave.
Spokane, WA 99212
Phone: 509/892-1121
FAX: 509/892-1135
info@controlsolutionsnw.com

REV.	DESCRIPTION	DATE	BY
A	Submittals	11-19-03	JN
B	As-Built Drawings	12-22-04	JN

DATE 11/19/03 FILENAME 2071 BY M2.V6D

DESCRIPTION: DDC Network Layout
PROJECT NAME: FAFB Building 2071
ADDRESS: Fairchild AFB
LOCATION:
ENGINEER:
CONTRACTOR: Pro Heating & A/C, Inc
ENG'D BY: Jeff Nelson
DRAWN BY: Jeff Nelson

Job Number 4103-061

Print 09/19/06
Last Edit 09/19/06

UH-1, UH-2, & FT-1 Controls

This drawing is the property of Control Solutions Northwest. The information contained hereon is confidential and will neither be reproduced in whole or in part nor disclosed to other parties except as authorized by Control Solutions Northwest.

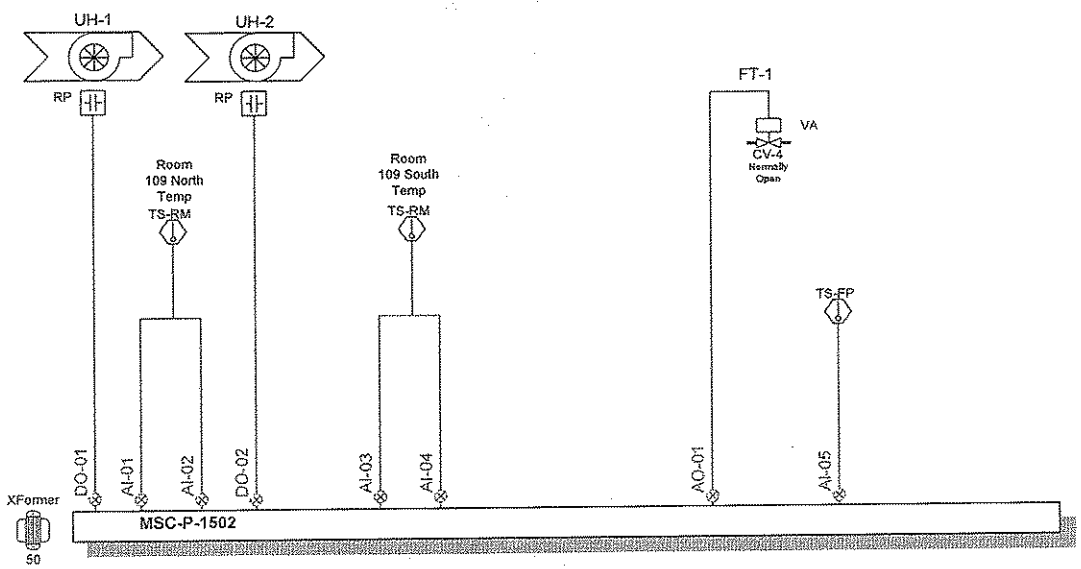

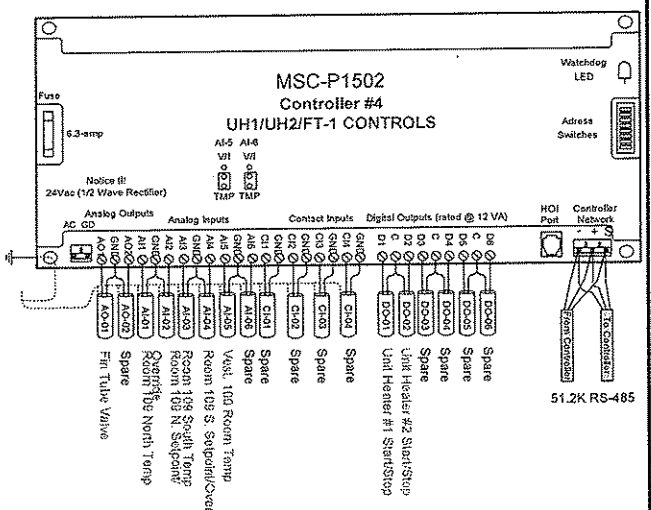

Bill of Materials - CSN Provided Devices

BOM Tag	Part Number	Device	Qty	Order Notes
CV-4	See schedule	Control Valve	1	Early Need
VA	MS40-7043	35"-# SR Actuator	1	
MSC-P-1502	MSC-P1502	Controller - Equip	1	
RP	RIB2401C	Relay - Control	2	
TS-FP	BA/1K-SP	Flat Plate Room Sensor	1	
TS-RM	TS-58801-272	Room Sensor w/Setp/OVR	2	
X-1	AT150F 1022	Xformer 50 VA	1	

Input/Output Points

Controller	TERM ID	Point ID	I/O Description	I/O Type
UH	AI-01	109NTEMP	Room 109 North Temp	Analog Input
UH	AI-02	109NSETP	Room 109 N. Setpoint/Override	
Analog Input				
UH	AI-03	109STEMP	Room 109 South Temp	Analog Input
UH	AI-04	109SSETP	Room 109 S. Setpoint/Override	
Analog Input				
UH	AI-05	100-TEMP	Vest. 100 Room Temp	Analog Input
UH	AI-06		Spare	Analog Input
UH	AO-01	FIN-VALV	Fin Tube Valve	
Analog Output				
UH	AO-02		Spare	Analog Output
UH	CI-01		Spare	Digital Input
UH	CI-02		Spare	Digital Input
UH	CI-03		Spare	Digital Input
UH	CI-04		Spare	Digital Input
UH	DO-01	UH1-SS	Unit Heater #1 Start/Stop	Digital Output
UH	DO-02	UH2-SS	Unit Heater #2 Start/Stop	Digital Output
UH	DO-03		Spare	Digital Output
UH	DO-04		Spare	Digital Output
UH	DO-05		Spare	Digital Output
UH	DO-06		Spare	Digital Output

Control Solutions Northwest, Inc.
7222 E. Nora Ave.
Spokane, WA 99212
Phone: 509/892-1121
FAX: 509/892-1135
info@controlsolutionsnw.com

REV.	DESCRIPTION	DATE	BY
A	Submittals	11-19-03	JN
B	As-Built Drawings	12-22-04	JN

DATE 11/19/03 FILENAME 2071 BY M2.VSD

DESCRIPTION: UH-1, UH-2, & FT-1 Controls
PROJECT NAME: FAFB Building 2071
ADDRESS: Fairchild AFB
LOCATION:
ENGINEER: Pro Heating & A/C, Inc
CONTRACTOR: Jeff Nelson
ENG'D BY: Jeff Nelson
DRAWN BY:

Job Number 4103-061

Print 09/19/06
Last Edit 09/19/06
PAGE 7 OF 12

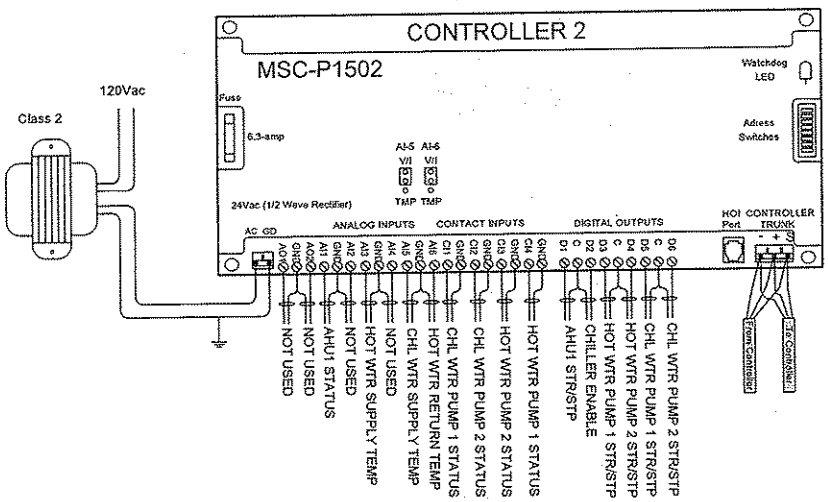

NOTES

1) This controller installed by Ed Hogan to facilitate shelter-in-place (SIP) shutdown of air handler. Ed also hooked the hot water and chiller equipment for additional control.

Sequence of Operation

The hot water pumps will run until the steam pressure drops to the alarm point. The reason for this is because there is no DDC control of the steam to hot water converter valve. Lead pump will change weekly based upon runtime and the lag pump will start if the lead pump goes into alarm.

The air runs on a 24 hour schedule – the building is occupied by the Security Police.

The chiller and pumps is enabled when the OAT is > 53 (*or as set*). The chiller runs on its own controls. The chilled water pumps will change lead weekly based upon runtime. The lag pump will start when the lead pump goes into alarm.

Input/Output Points

Controller	TERM ID	Point ID	I/O Description	I/O Type
Analog Input				
02	AI-01	AHU1 ST	AHU Fan Status	Contact Input
02	AI-02	NOT USED		Analog Input
02	AI-03	HWS TEMP	Hot Water Supply Temp	Analog Input
02	AI-04	NOT USED		Analog Input
02	AI-05	CWS TEMP	Chill Water Supply Temp	Analog Input
02	AI-06	HWR TEMP	Hot Water Return Temp	Analog Input
Analog Output				
02	AO-01	NOT USED		Analog Output
02	AO-02	NOT USED		Analog Output
Contact Input				
02	CI-01	NO POINT	Feedback for CWP1 SS	Digital Input
02	CI-02	NO POINT	Feedback for CWP2 SS	Digital Input
02	CI-03	NO POINT	Feedback for HWP2 SS	Digital Input
02	CI-04	NO POINT	Feedback for HWP1 SS	Digital Input
Digital Output				
02	DO-01	AHU1 SS	Air Handler 1 Start/Stop	Digital Output
02	DO-02	CHILLER	Chiller Enable	Digital Output
02	DO-03	HWP1 SS	Hot Water Pump 1 Str/Stp	Digital Output
02	DO-04	HWP2 SS	Hot Water Pump 2 Str/Stp	Digital Output
02	DO-05	CWP1 SS	Chill Water Pump 1 Str/Stp	Digital Output
02	DO-06	CWP2 SS	Chill Water Pump 2 Str/Stp	Digital Output

Sensor Types/Ranges

TERM ID	Point ID	I/O Description	I/O Type
AI-03	HWS TEMP	Invensys TS 5800- Scale 337.4 Offset -65.62 (LIN L)	Analog Input
AI-05	CWS TEMP	4-20 ma = 0-100 deg– Scale 125 Offset -25 (LIN H)	Analog Input
AI-06	HWR TEMP	4-20 ma = 0-250 deg- Scale 312.5 Offset -62.5 (LIN H)	Analog Input

BLDG 2071 SECURITY POLICE

REV.	DESCRIPTION	DATE	BY
A	As-Built Drawings	04-21-05	MZ

DATE 04/21/05 FILENAME 2071 FAFB INSTALLS.VSD

Controller 2

DESCRIPTION

PROJECT NAME: FAFB Building 2071
ADDRESS: Fairchild AFB
LOCATION:
ENGINEER:
CONTRACTOR: Ed Hogan
ENG'D BY: Mike Miller
DRAWN BY:

FAFB INSTALLED

Print 04/21/05
Last Edit 04/28/05
PAGE 1 OF 2

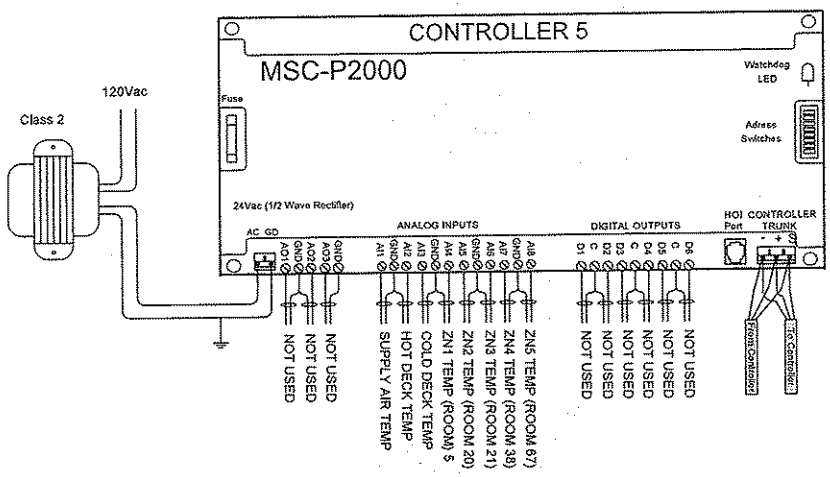

NOTES

1) This controller installed by Ed Hogan to basically to read the zone temperatures and some temps on the AHU. This controller has no control outputs at this time.

Input/Output Points

Controller	TERM ID	Point ID	I/O Description	I/O Type
Analog Input				
05	AI-01	AHU1 SAT	AHU Supply Temp	Analog Input
05	AI-02	HDK TMP	AHU Hot Deck Temp	Analog Input
05	AI-03	CDK TMP	AHU Cold Deck Temp	Analog Input
05	AI-04	ZN1 RM05	Room 5 Temperature	Analog Input
05	AI-05	ZN2 RM20	Room 20 Temperature	Analog Input
05	AI-06	ZN3 RM21	Room 21 Temperature	Analog Input
05	AI-07	ZN4 RM38	Room 38 Temperature	Analog Input
05	AI-08	ZN5 RM67	Room 67 Temperature	Analog Input
Analog Output				
05	AO-01	NOT USED		Analog Output
05	AO-02	NOT USED		Analog Output
05	AO-03	NOT USED		Analog Output
Digital Output				
05	DO-01	NOT USED		Digital Output
05	DO-02	NOT USED		Digital Output
05	DO-03	NOT USED		Digital Output
05	DO-04	NOT USED		Digital Output
05	DO-05	NOT USED		Digital Output
05	DO-06	NOT USED		Digital Output

Sensor Types/Ranges

TERM ID	Point ID	I/O Description	I/O Type
AI-01	AHU1 SAT	4-20 ma = -30-130 deg- Scale 200 Offset -70 (LIN H)	Analog Input
AI-02	HDK TMP	4-20 ma = -30-130 deg- Scale 200 Offset -70 (LIN H)	Analog Input
AI-03	CDK TMP	4-20 ma = -30-130 deg- Scale 200 Offset -70 (LIN H)	Analog Input
AI-04	ZN1 RM05	4-20 ma = 50-85 deg- Scale 43.75 Offset 41.25 (LIN H)	Analog Input
AI-05	ZN2 RM20	4-20 ma = 50-85 deg- Scale 43.75 Offset 41.25 (LIN H)	Analog Input
AI-06	ZN3 RM21	4-20 ma = 50-85 deg- Scale 43.75 Offset 41.25 (LIN H)	Analog Input
AI-07	ZN4 RM38	4-20 ma = 50-85 deg- Scale 43.75 Offset 41.25 (LIN H)	Analog Input
AI-08	ZN5 RM67	4-20 ma = 50-85 deg- Scale 43.75 Offset 41.25 (LIN H)	Analog Input

BLDG 2071 SECURITY POLICE

REV.	DESCRIPTION	DATE	BY
A	As-Built Drawings	04-25-05	MZ

DATE 04/21/05 FILENAME 2071 FAFB INSTALLS.VSD

Controller 5

DESCRIPTION

PROJECT NAME: FAFB Building 2071
ADDRESS: Fairchild AFB
LOCATION:
ENGINEER: Ed Hogan
CONTRACTOR: Mike Miller
ENGD BY:
DRAWN BY:

FAFB INSTALLED

Print 04/21/05
Last Edit 04/28/05
PAGE 2 OF 2

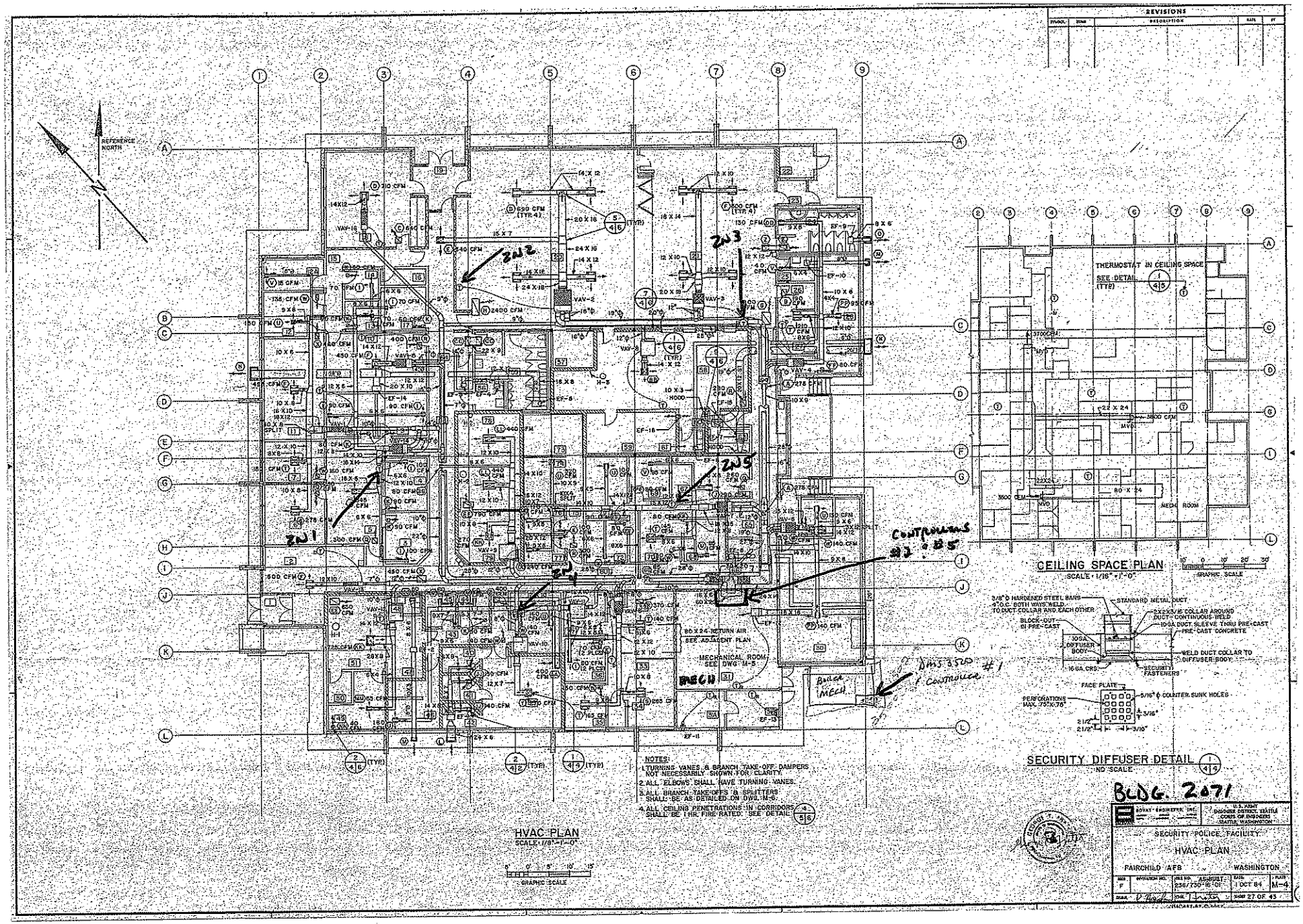
REVISIONS
REFERENCE NORTH
ZN1
ZN2
ZN3
ZN4
ZN5
CONTROLLERS #2 & #5
DAYS 3500 #1 CONTROLLER
MECH
BOILER MECH
MECHANICAL ROOM SEE DWG M-5
80 X 24 RETURN AIR SEE ADJACENT PLAN
THERMOSTAT IN CEILING SPACE SEE DETAIL (TYP)
MECH ROOM
CEILING SPACE PLAN
SCALE: 1/16" = 1'-0"
GRAPHIC SCALE
3/8" Ø HARDENED STEEL BARS 4" O.C. BOTH WAYS WELD TO DUCT COLLAR AND EACH OTHER
STANDARD METAL DUCT
2X2X3/16 COLLAR AROUND DUCT - CONTINUOUS WELD
10GA DUCT SLEEVE THRU PRE-CAST
PRE-CAST CONCRETE
BLOCK-OUT IN PRE-CAST
10GA DIFFUSER BODY
WELD DUCT COLLAR TO DIFFUSER BODY
16GA CRS
SECURITY FASTENERS
FACE PLATE
PERFORATIONS MAX. 75"X.75"
5/16" Ø COUNTER SUNK HOLES
SECURITY DIFFUSER DETAIL
NO SCALE
NOTES:
1. TURNING VANES & BRANCH TAKE-OFF DAMPERS NOT NECESSARILY SHOWN FOR CLARITY.
2. ALL ELBOWS SHALL HAVE TURNING VANES.
3. ALL BRANCH TAKE-OFFS & SPLITTERS SHALL BE AS DETAILED ON DWG. M-6.
4. ALL CEILING PENETRATIONS IN CORRIDORS SHALL BE 1 HR. FIRE RATED. SEE DETAIL
HVAC PLAN
SCALE: 1/8" = 1'-0"
GRAPHIC SCALE
BLDG. 2071
U.S. ARMY ENGINEER DISTRICT, SEATTLE CORPS OF ENGINEERS SEATTLE, WASHINGTON
SECURITY POLICE FACILITY
HVAC PLAN
FAIRCHILD AFB WASHINGTON
F
236/730-16-01
1 OCT 84
M-4
27 OF 43

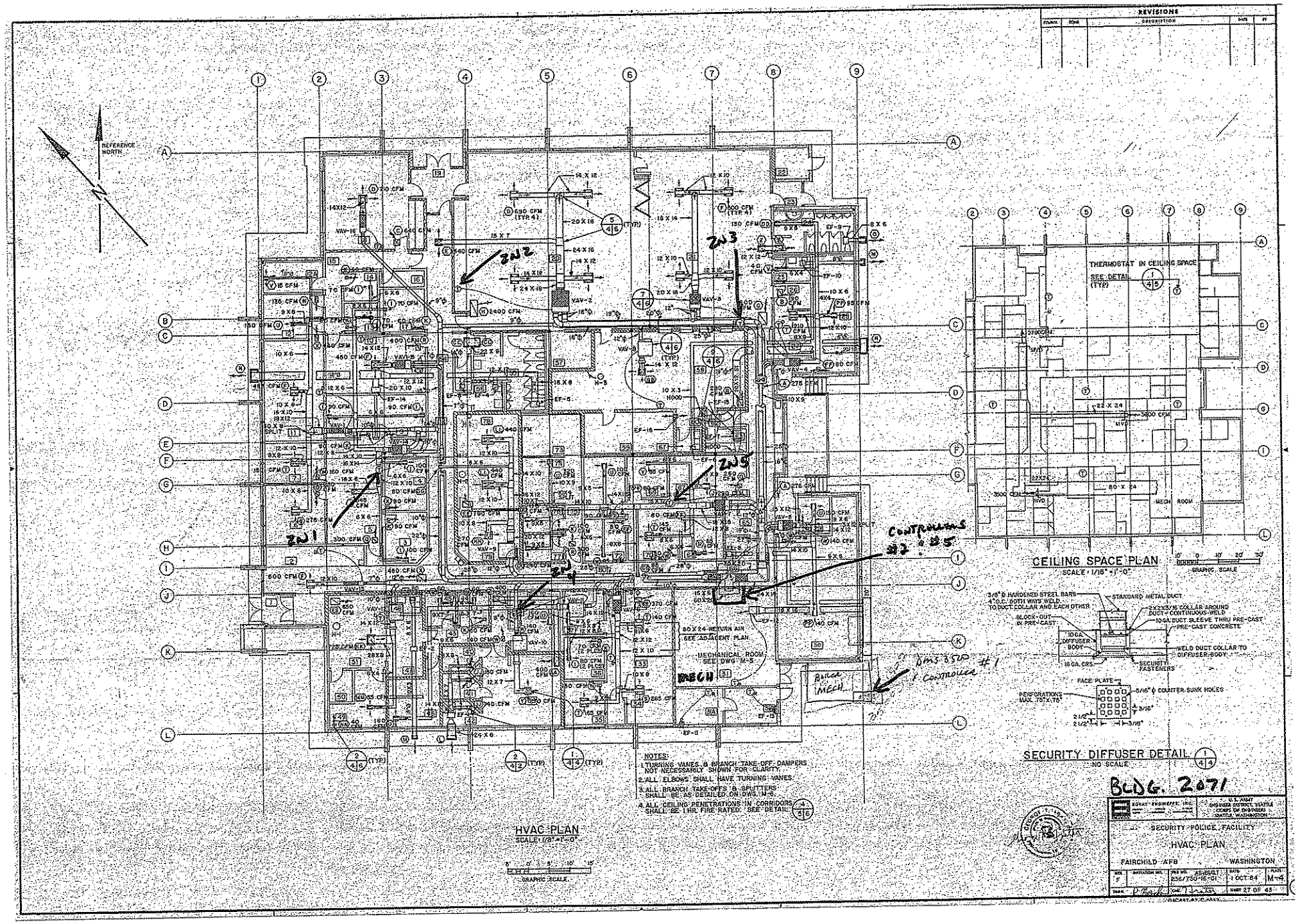
REVISIONS
REFERENCE NORTH
ZN1
ZN2
ZN3
ZN4
ZN5
CONTROLLERS #2 & #5
DMS 3500 & CONTROLLER #1
MECH
BOILER MECH
80 X 24 RETURN AIR
SEE ADJACENT PLAN
MECHANICAL ROOM SEE DWG M-5
HVAC PLAN
SCALE: 1/8" = 1'-0"
GRAPHIC SCALE
NOTES:
1. TURNING VANES & BRANCH TAKE-OFF DAMPERS NOT NECESSARILY SHOWN FOR CLARITY.
2. ALL ELBOWS SHALL HAVE TURNING VANES.
3. ALL BRANCH TAKE-OFFS & SPLITTERS SHALL BE AS DETAILED ON DWG. M-6.
4. ALL CEILING PENETRATIONS IN CORRIDORS SHALL BE 1 HR. FIRE RATED. SEE DETAIL 4/5/6
THERMOSTAT IN CEILING SPACE
SEE DETAIL 1/4/5 (TYP)
MECH ROOM
CEILING SPACE PLAN
SCALE: 1/16" = 1'-0"
GRAPHIC SCALE
3/8" Ø HARDENED STEEL BARS 4" O.C. BOTH WAYS WELD TO DUCT COLLAR AND EACH OTHER
STANDARD METAL DUCT
2X2X3/16 COLLAR AROUND DUCT - CONTINUOUS WELD
BLOCK-OUT IN PRE-CAST
10GA DUCT SLEEVE THRU PRE-CAST
PRE-CAST CONCRETE
10GA DIFFUSER BODY
WELD DUCT COLLAR TO DIFFUSER BODY
16GA CRS.
SECURITY FASTENERS
FACE PLATE
PERFORATIONS MAX. 75" X 75"
5/16" Ø COUNTER SUNK HOLES
SECURITY DIFFUSER DETAIL 1/4/4
NO SCALE
BLDG. 2071
U.S. ARMY ENGINEER DISTRICT, SEATTLE CORPS OF ENGINEERS SEATTLE, WASHINGTON
SECURITY POLICE FACILITY
HVAC PLAN
FAIRCHILD AFB
WASHINGTON
AS-BUILT
236/730-16-01
1 OCT 84
M-4
SHEET 27 OF 43

Building 2071 Floor Plan

This drawing is the property of Control Solutions Northwest. The information contained hereon is confidential and will neither be reproduced in whole or in part nor disclosed to other parties except as authorized by Control Solutions Northwest.

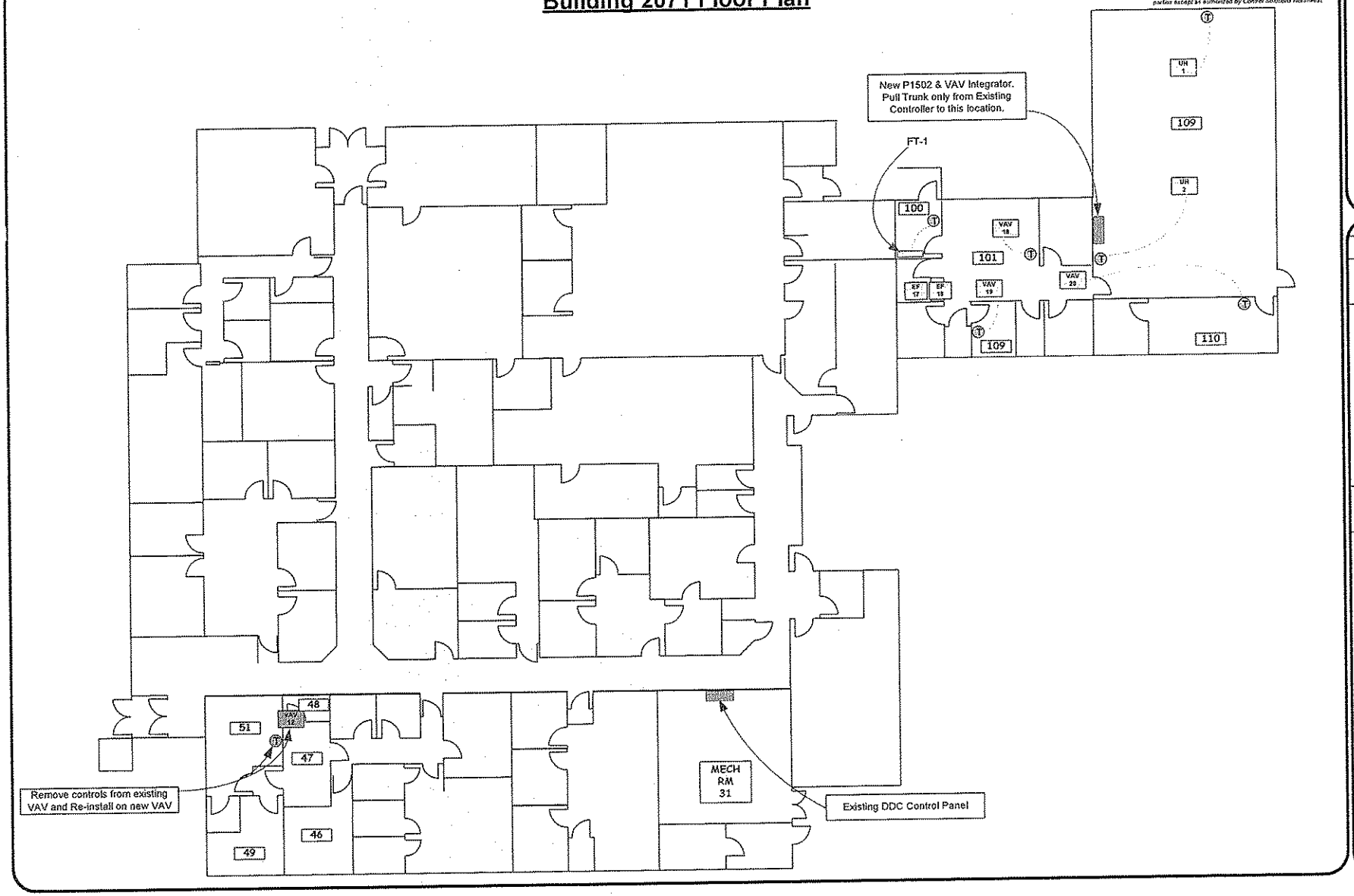

Control Solutions Northwest, Inc.
7222 E. Nora Ave.
Spokane, WA 99212
Phone: 509/892-1121
FAX: 509/892-1135
info@controlsolutionsnw.com

REV.	DESCRIPTION	DATE	BY
A	Submittals	11-19-03	JN
B	As-Built Drawings	12-22-04	JN

DATE	11/19/03
FILENAME	2071 BY MZ.VSD

DESCRIPTION	Building 2071 Floor Plan
PROJECT NAME:	FAFB Building 2071
ADDRESS:	Fairchild AFB
LOCATION:	
ENGINEER:	Pro Heating & A/C, Inc
CONTRACTOR:	Jeff Nelson
ENG'D BY:	Jeff Nelson
DRAWN BY:	

Job Number 4103-061

Print 09/19/06
Last Edit 09/19/06
PAGE 3 OF 12

This drawing is the property of Control Solutions Northwest. The information contained hereon is confidential and will neither be reproduced in whole or in part nor disclosed to other parties except as authorized by Control Solutions Northwest.

DDC Network Layout

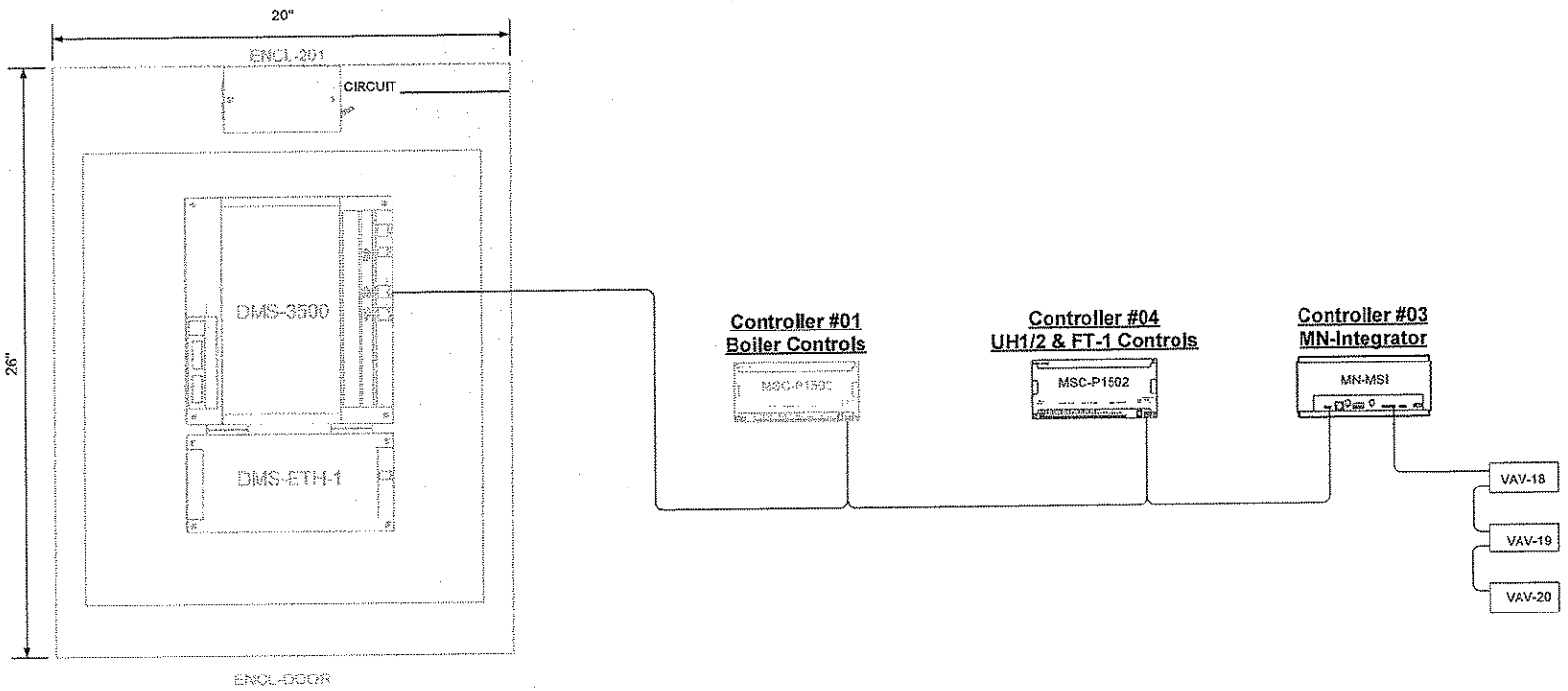

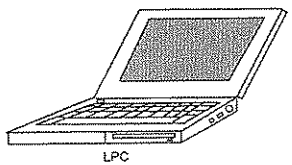

Win 98, Pentium III 450 Mhz, 64MB RAM, 6GB HD, 24X CDROM, 56K Modem Laptop w/Protective Carrying Case

Bill of Materials - Existing DDC Controls

BOM Tag	Part Number	Device	Qty
DMS-3500	DMS-3500	Area Controller	1
ENCL-201	ENCL-201-TUB	24"X32"X8" NEMA 1 Enclosure w/Xfmr/Backplate	1
ENCL-DOOR	ENCL-DOOR-PLA	Locking Door for ENCL-201-TUB	1
ETH-NIM	DMS-ETH-1	Area Controller Ethernet Adapter	1
MSC-P-1502	MSC-P1502	Controller - Equip	1

Bill of Materials - CSN Provided Devices

BOM Tag	Part Number	Device	Qty	Order Notes
LPC		Laptop PC	1	

Control Solutions Northwest, Inc.
7222 E. Nora Ave.
Spokane, WA 99212
Phone: 509/892-1121
FAX: 509/892-1135
info@controlsolutionsnw.com

REV.	DESCRIPTION	DATE	BY
A	Submittals	11-19-03	JN
B	As-Built Drawings	12-22-04	JN

DATE 11/19/03 FILENAME 2071 BY M2.VSD

DESCRIPTION: DDC Network Layout
PROJECT NAME: FAFB Building 2071
ADDRESS: Fairchild AFB
LOCATION:
ENGINEER:
CONTRACTOR: Pro Heating & A/C, Inc
ENG'D BY: Jeff Nelson
DRAWN BY: Jeff Nelson

Job Number 4103-061

Print 09/19/06
Last Edit 08/19/06
PAGE 4 OF 12

UH-1, UH-2, & FT-1 Controls

This drawing is the property of Control Solutions Northwest. The information contained herein is confidential and will neither be reproduced in whole or in part nor disclosed to other parties except as authorized by Control Solutions Northwest.

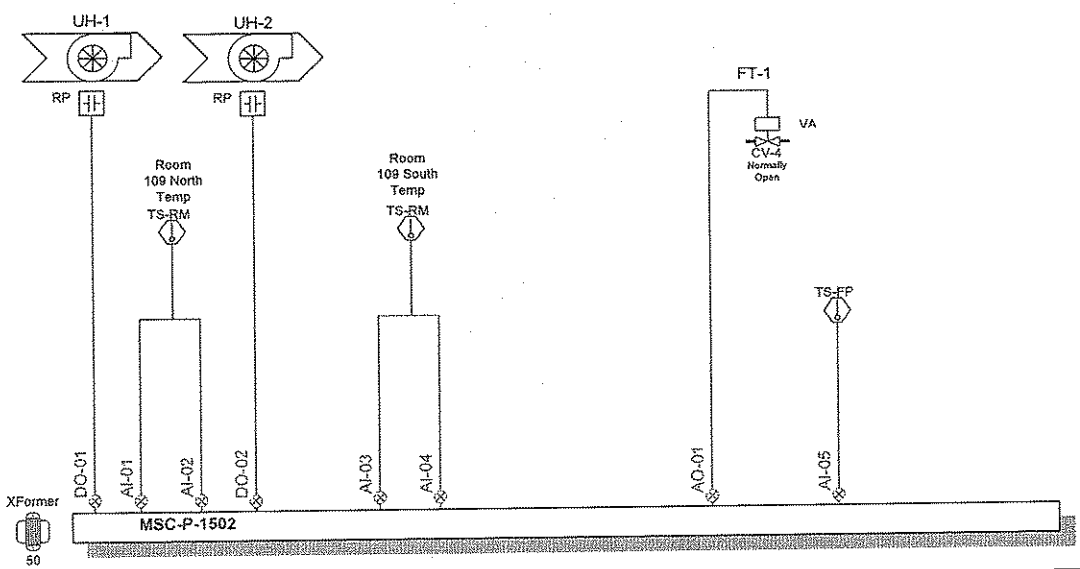

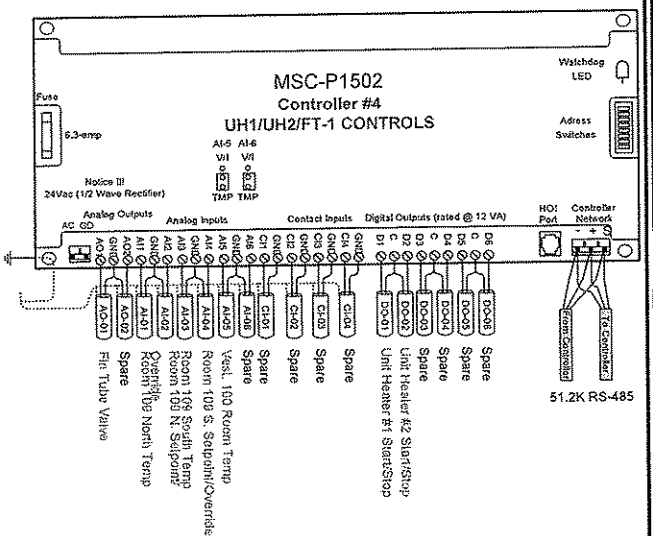

Bill of Materials - CSN Provided Devices

BOM Tag	Part Number	Device	Qty	Order Notes
CV-4	See schedule	Control Valve	1	Early Need
VA	MS40-7043	35"-# SR Actuator	1	
MSC-P-1502	MSC-P1502	Controller - Equip	1	
RP	RIB2401C	Relay - Control	2	
TS-FP	BA/1K-SP	Flat Plate Room Sensor	1	
TS-RM	TS-58801-272	Room Sensor w/Setp/OVR	2	
X-1	AT150F 1022	Xformer 50 VA	1	

Input/Output Points

Controller	TERM ID	Point ID	I/O Description	I/O Type
UH	AI-01	109NTEMP	Room 109 North Temp	Analog Input
UH	AI-02	109NSETP	Room 109 N. Setpoint/Override	
Analog Input				
UH	AI-03	109STEMP	Room 109 South Temp	Analog Input
UH	AI-04	109SSETP	Room 109 S. Setpoint/Override	
Analog Input				
UH	AI-05	100-TEMP	Vest. 100 Room Temp	Analog Input
UH	AI-06		Spare	Analog Input
UH	AO-01	FIN-VALV	Fin Tube Valve	
Analog Output				
UH	AO-02		Spare	Analog Output
UH	CI-01		Spare	Digital Input
UH	CI-02		Spare	Digital Input
UH	CI-03		Spare	Digital Input
UH	CI-04		Spare	Digital Input
UH	DO-01	UH1-SS	Unit Heater #1 Start/Stop	Digital Output
UH	DO-02	UH2-SS	Unit Heater #2 Start/Stop	Digital Output
UH	DO-03		Spare	Digital Output
UH	DO-04		Spare	Digital Output
UH	DO-05		Spare	Digital Output
UH	DO-06		Spare	Digital Output

Control Solutions Northwest, Inc.
7222 E. Nora Ave.
Spokane, WA 99212
Phone: 509/892-1121
FAX: 509/892-1135
info@controlsolutionsnw.com

REV.	DESCRIPTION	DATE	BY
A	Submittals	11-19-03	JN
B	As-Built Drawings	12-22-04	JN

DATE	FILENAME
11/19/03	2071 BY M2.VSD

DESCRIPTION: UH-1, UH-2, & FT-1 Controls

PROJECT NAME: FAFB Building 2071
ADDRESS: Fairchild AFB
LOCATION:
ENGINEER:
CONTRACTOR: Pro Heating & A/C, Inc
ENG'D BY: Jeff Nelson
DRAWN BY: Jeff Nelson

Job Number 4103-061

Print 09/19/06
Last Edit 09/19/06
PAGE 7 OF 12

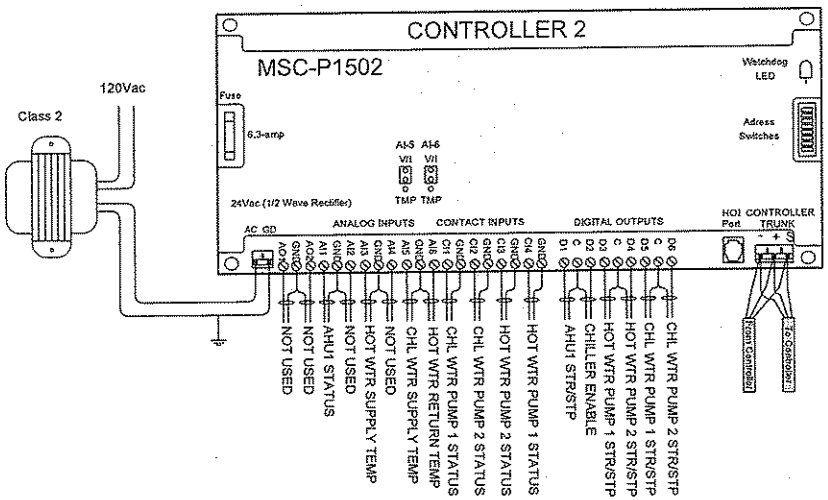

NOTES

1) This controller installed by Ed Hogan to facilitate shelter-in-place (SIP) shutdown of air handler. Ed also hooked the hot water and chiller equipment for additional control.

Sequence of Operation

The hot water pumps will run until the steam pressure drops to the alarm point. The reason for this is because there is no DDC control of the steam to hot water converter valve. Lead pump will change weekly based upon runtime and the lag pump will start if the lead pump goes into alarm.

The air runs on a 24 hour schedule – the building is occupied by the Security Police.

The chiller and pumps is enabled when the OAT is > 53 (*or as set*). The chiller runs on its own controls. The chilled water pumps will change lead weekly based upon runtime. The lag pump will start when the lead pump goes into alarm.

Input/Output Points

Controller	TERM ID	Point ID	I/O Description	I/O Type
Analog Input				
02	AI-01	AHU1 ST	AHU Fan Status	Contact Input
02	AI-02	NOT USED		Analog Input
02	AI-03	HWS TEMP	Hot Water Supply Temp	Analog Input
02	AI-04	NOT USED		Analog Input
02	AI-05	CWS TEMP	Chill Water Supply Temp	Analog Input
02	AI-06	HWR TEMP	Hot Water Return Temp	Analog Input
Analog Output				
02	AO-01	NOT USED		Analog Output
02	AO-02	NOT USED		Analog Output
Contact Input				
02	CI-01	NO POINT	Feedback for CWP1 SS	Digital Input
02	CI-02	NO POINT	Feedback for CWP2 SS	Digital Input
02	CI-03	NO POINT	Feedback for HWP2 SS	Digital Input
02	CI-04	NO POINT	Feedback for HWP1 SS	Digital Input
Digital Output				
02	DO-01	AHU1 SS	Air Handler 1 Start/Stop	Digital Output
02	DO-02	CHILLER	Chiller Enable	Digital Output
02	DO-03	HWP1 SS	Hot Water Pump 1 Str/Stp	Digital Output
02	DO-04	HWP2 SS	Hot Water Pump 2 Str/Stp	Digital Output
02	DO-05	CWP1 SS	Chill Water Pump 1 Str/Stp	Digital Output
02	DO-06	CWP2 SS	Chill Water Pump 2 Str/Stp	Digital Output

Sensor Types/Ranges

TERM ID	Point ID	I/O Description	I/O Type
AI-03	HWS TEMP	Invensys TS 5800- Scale 337.4 Offset -65.62 (LIN L)	Analog Input
AI-05	CWS TEMP	4-20 ma = 0-100 deg– Scale 125 Offset -25 (LIN H)	Analog Input
AI-06	HWR TEMP	4-20 ma = 0-250 deg- Scale 312.5 Offset -62.5 (LIN H)	Analog Input

BLDG 2071 SECURITY POLICE

REV.	DESCRIPTION	DATE	BY
A	As-Built Drawings	04-21-05	MJ

DESCRIPTION: Controller 2

PROJECT NAME: FAFB Building 2071
ADDRESS: Fairchild AFB
LOCATION:
ENGINEER:
CONTRACTOR: Ed Hogan
ENG'D BY: Mike Miller
DRAWN BY:

FAFB INSTALLED

Print 04/21/05
Last Edit 04/26/05
PAGE 1 OF 2

DATE 04/21/05 FILENAME 2071 FAFB INSTALLS.VSD

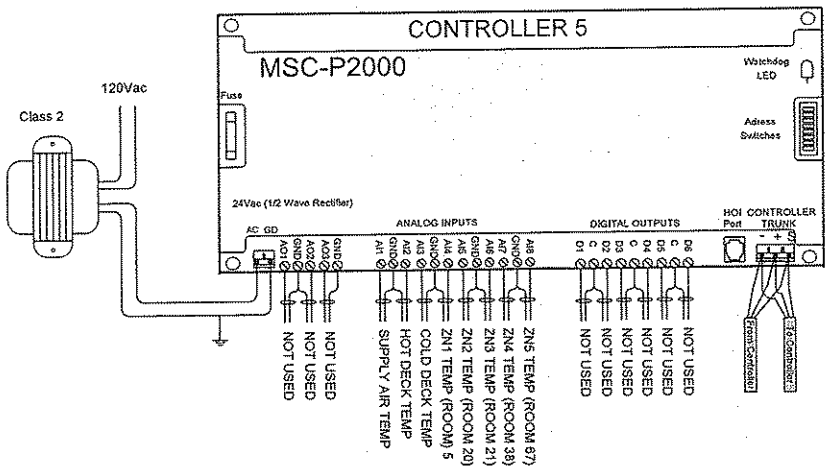

NOTES

1) This controller installed by Ed Hogan to basically to read the zone temperatures and some temps on the AHU. This controller has no control outputs at this time.

Input/Output Points

Controller	TERM ID	Point ID	I/O Description	I/O Type
Analog Input				
05	AI-01	AHU1 SAT	AHU Supply Temp	Analog Input
05	AI-02	HDK TMP	AHU Hot Deck Temp	Analog Input
05	AI-03	CDK TMP	AHU Cold Deck Temp	Analog Input
05	AI-04	ZN1 RM05	Room 5 Temperature	Analog Input
05	AI-05	ZN2 RM20	Room 20 Temperature	Analog Input
05	AI-06	ZN3 RM21	Room 21 Temperature	Analog Input
05	AI-07	ZN4 RM38	Room 38 Temperature	Analog Input
05	AI-08	ZN5 RM67	Room 67 Temperature	Analog Input
Analog Output				
05	AO-01	NOT USED		Analog Output
05	AO-02	NOT USED		Analog Output
05	AO-03	NOT USED		Analog Output
Digital Output				
05	DO-01	NOT USED		Digital Output
05	DO-02	NOT USED		Digital Output
05	DO-03	NOT USED		Digital Output
05	DO-04	NOT USED		Digital Output
05	DO-05	NOT USED		Digital Output
05	DO-06	NOT USED		Digital Output

Sensor Types/Ranges

TERM ID	Point ID	I/O Description	I/O Type
AI-01	AHU1 SAT	4-20 ma = -30-130 deg- Scale 200 Offset -70 (LIN H)	Analog Input
AI-02	HDK TMP	4-20 ma = -30-130 deg- Scale 200 Offset -70 (LIN H)	Analog Input
AI-03	CDK TMP	4-20 ma = -30-130 deg- Scale 200 Offset -70 (LIN H)	Analog Input
AI-04	ZN1 RM05	4-20 ma = 50-85 deg- Scale 43.75 Offset 41.25 (LIN H)	Analog Input
AI-05	ZN2 RM20	4-20 ma = 50-85 deg- Scale 43.75 Offset 41.25 (LIN H)	Analog Input
AI-06	ZN3 RM21	4-20 ma = 50-85 deg- Scale 43.75 Offset 41.25 (LIN H)	Analog Input
AI-07	ZN4 RM38	4-20 ma = 50-85 deg- Scale 43.75 Offset 41.25 (LIN H)	Analog Input
AI-08	ZN5 RM67	4-20 ma = 50-85 deg- Scale 43.75 Offset 41.25 (LIN H)	Analog Input

BLDG 2071 SECURITY POLICE

REV.	DESCRIPTION	DATE	BY
A	As-Built Drawings	04-25-05	MJ2

DATE 04/21/05 FILENAME 2071 FAFB INSTALLS.VSD

Controller 5

DESCRIPTION

PROJECT NAME: FAFB Building 2071
ADDRESS: Fairchild AFB
LOCATION:
ENGINEER:
CONTRACTOR: Ed Hogan
ENGD BY: Mike Miller
DRAWN BY:

FAFB INSTALLED

Print 04/21/05
Last Edit 04/28/05
PAGE 2 OF 2