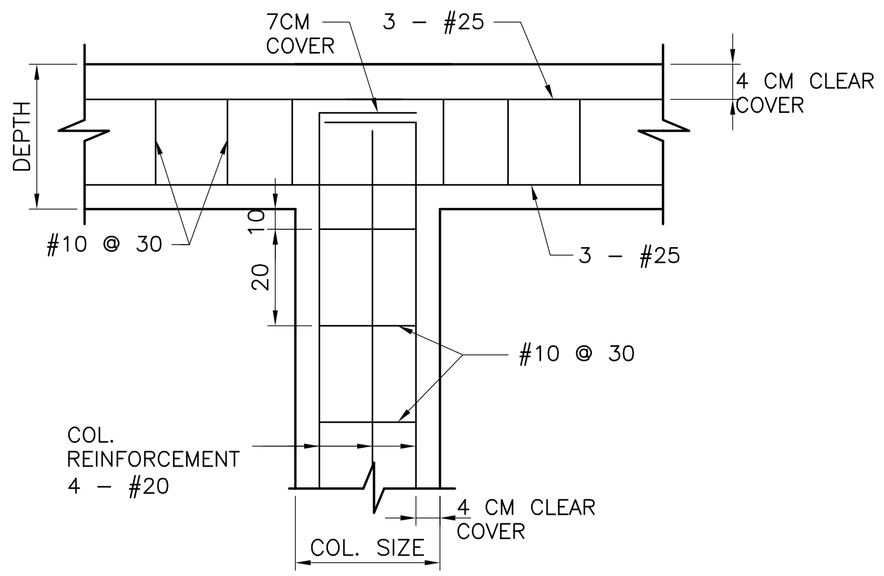

1 S04 TYPICAL TOP OF INTERMEDIATE COL. DETAIL WITH G.B. CONNECTION
1:10

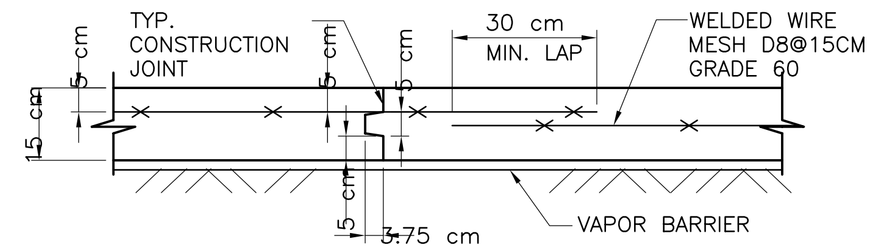

2 S04 TYPICAL SEC. FOR SLAB ON GRADE WITH CONSTRUCTION JOINT DETAIL
1:10

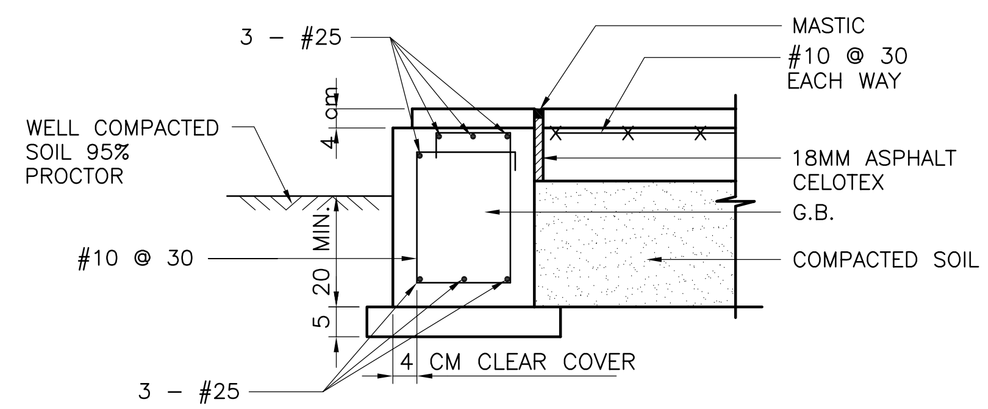

4 S04 TYPICAL SEC. FOR EXT. G.B. AND SLAB ON GRADE CONNECTION
1:10

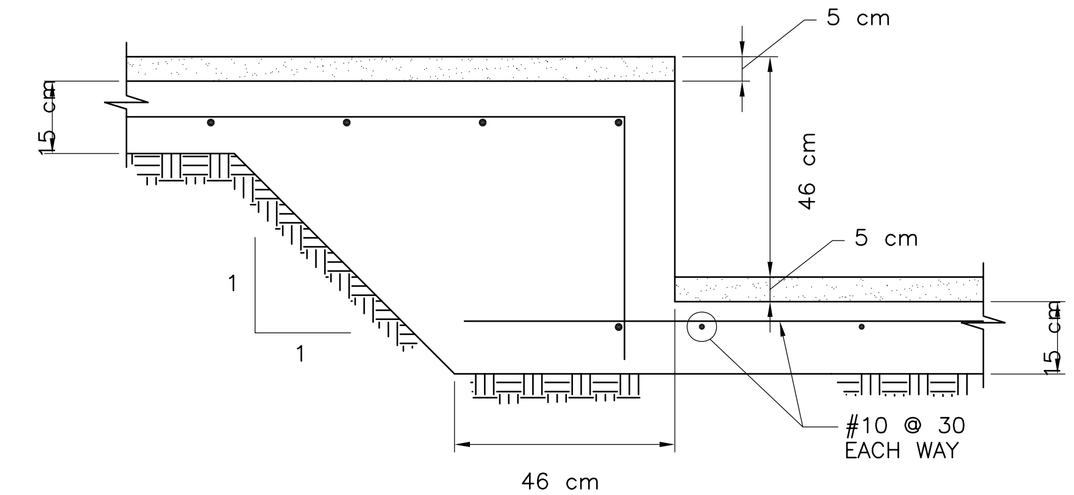

3 S04 SLAB GRADE CONNECTION AT CONTROL ROOM AREA
NTS

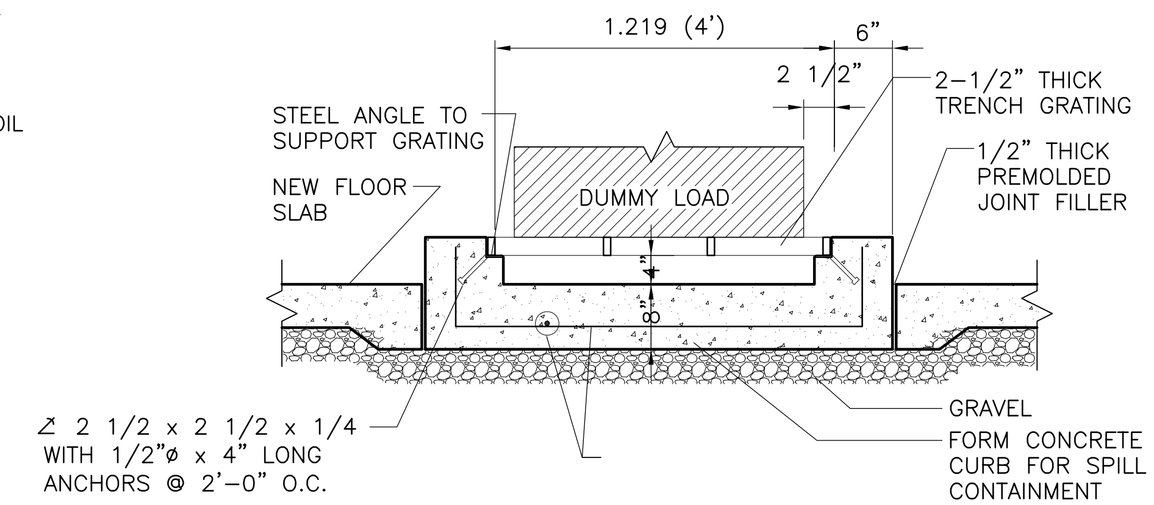

5 S04 GRATING OVER CURB DETAIL
NTS

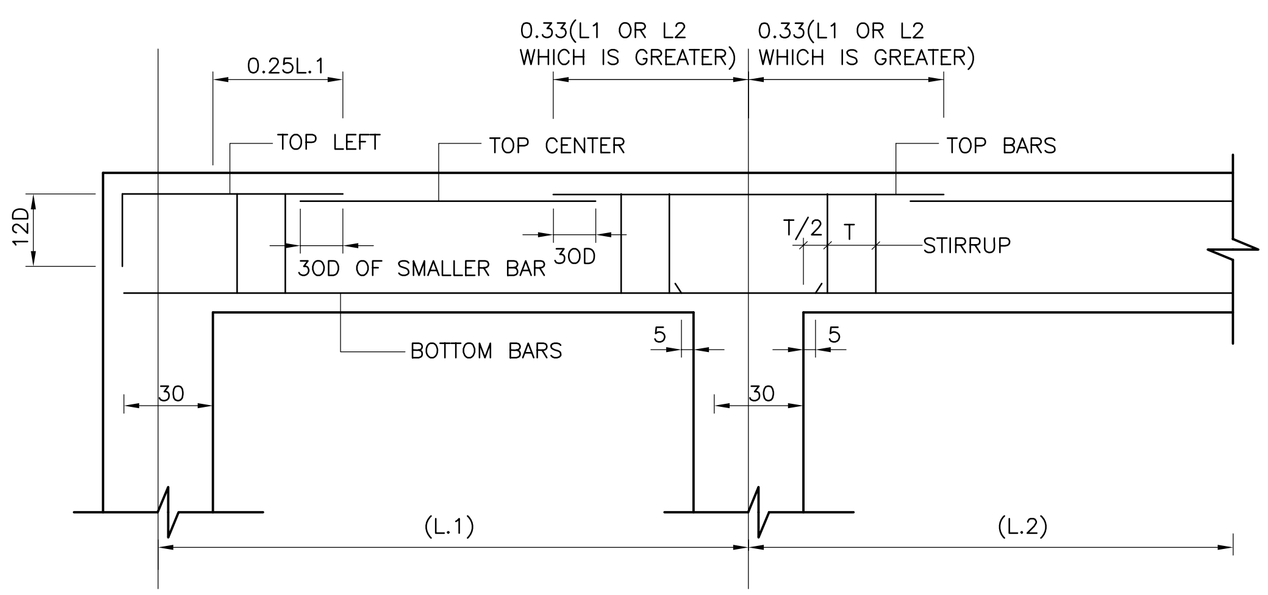

6 S04 TYPICAL DETAIL OF CONTINUOUS GRADE BEAM
1:10

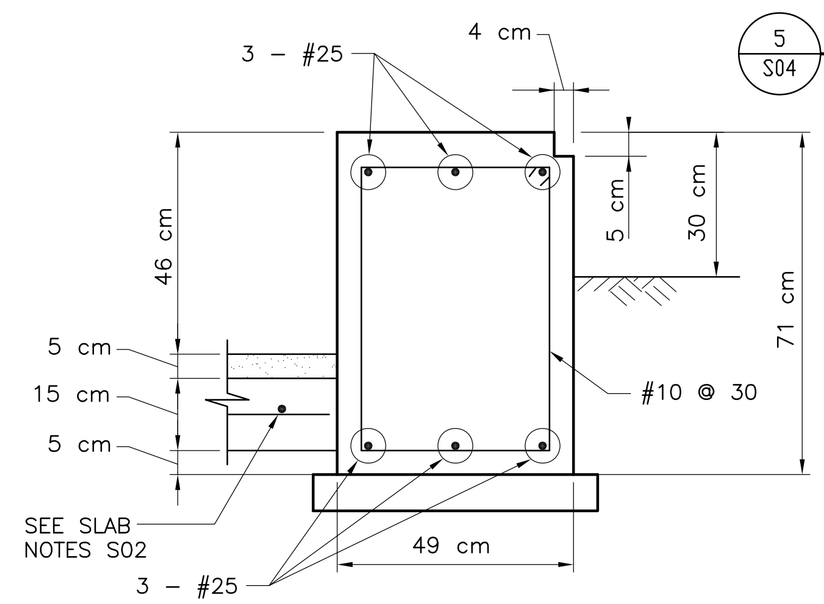

7 S04 G.B DETAILS FOR CONTROL ROOM AREA
1:10

AS BUILT

GRAPHIC SCALE:
0 1m 2m 5m
SCALE: 1:100 (METRIC)
0 4ft 8ft 16ft
SCALE: .12":1' (ENGLISH)
SCALE FACTOR – 100

SEAL:

REV	DESCRIPTIONS	DATE	APPD.

REVISION

INTERNATIONAL BROADCASTING BUREAU
ENGINEERING & TECHNICAL OPERATIONS
WASHINGTON, D.C. 20547

Bader AlMulla & Bros. Co. W.L.L
Engineering Group

		DATE
DRAWN	HAK	23/05/04
CHK. BY.	JPB	DATE
ENGR.	JPB	DATE

APPROVALS
PROJ. MANAGER TC

SHORTWAVE EXPANSION PROJECT
TRANSMITTER BUILDING
FOUNDATION, GROND BEAM & EQUIPMENT
PAD DETAILS
KUWAIT

IQC No. XX–XX–XX
TASK No. X
PROJ. No. 03NC080
CAD DESIGN FILE NAME: FILENAME

DWG. No. BMB–AS–C–S04 S04
SCALE: AS SHOWN SHEET 1 OF SHT

30 Galesi Drive, Wayne, N.J. 07470
TEL : (973) 785-4545
FAX : (973) 785-0766
www.hansonengineers.com
HANSON
THALES
675 North Washington St., Alexandria, VA. 22314
TEL : (703) 836-5644
FAX : (703) 836-3264
www.thales-bm.com