APPENDIX P

AVAILABLE DRAWINGS OF POLB STANDARD FENCE PLAN

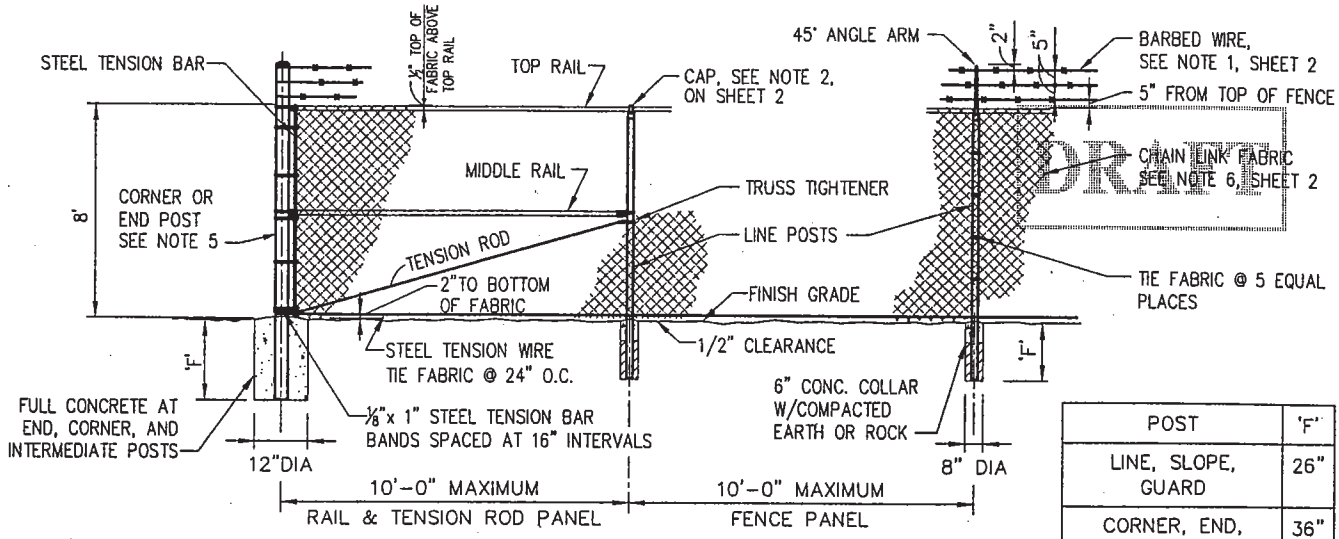

POST	'F'
LINE, SLOPE, GUARD	26"
CORNER, END, INTERMEDIATE	36"

TYPICAL FENCE ELEVATION

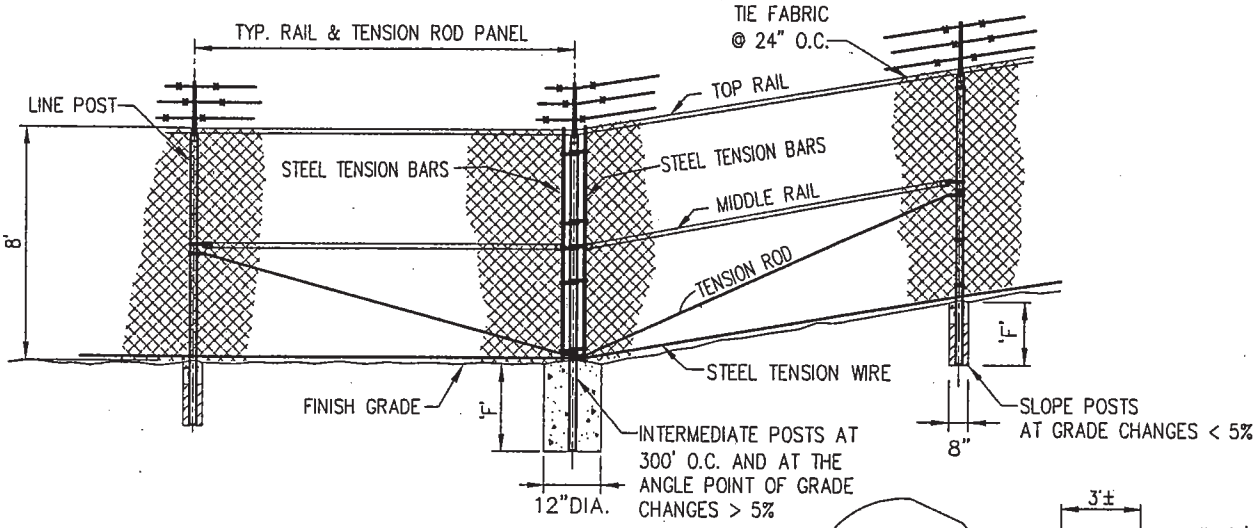

INTERMEDIATE POST DETAIL

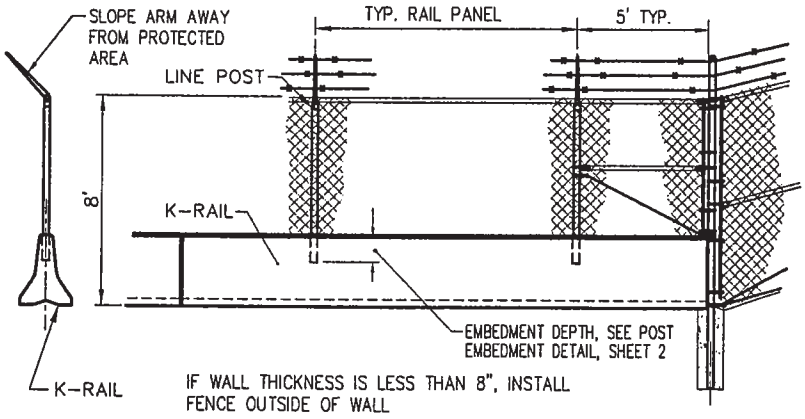

K-RAIL

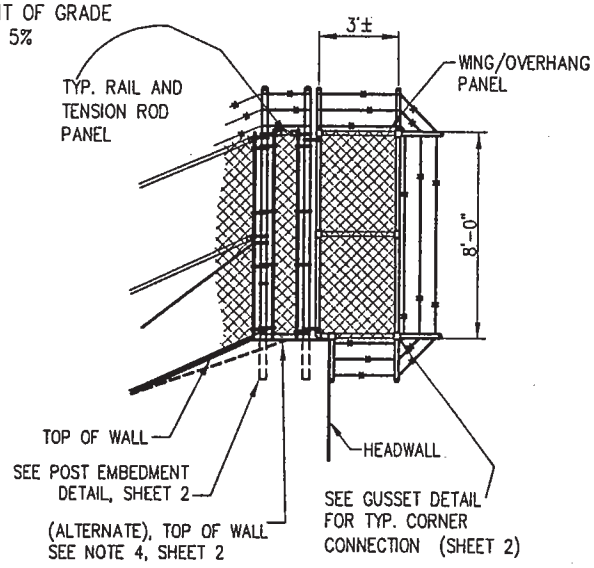

WING/OVERHANG PANEL

THE PORT OF LONG BEACH ENGINEERING DIVISION

REVISIONS	
NO.	DATE
1	
2	
3	

CHAIN LINK FENCE AND GATES

STANDARD PLAN

ST-19

APPROVED BY: D. Thiessen
CHIEF HARBOR ENGINEER

P.E. NO.: C-43065 DATE: 5-17-04

1 OF 4

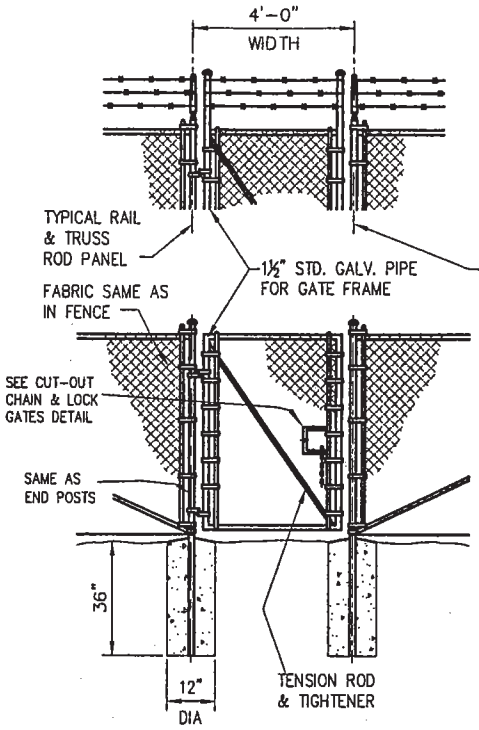

TYPICAL WALK GATE

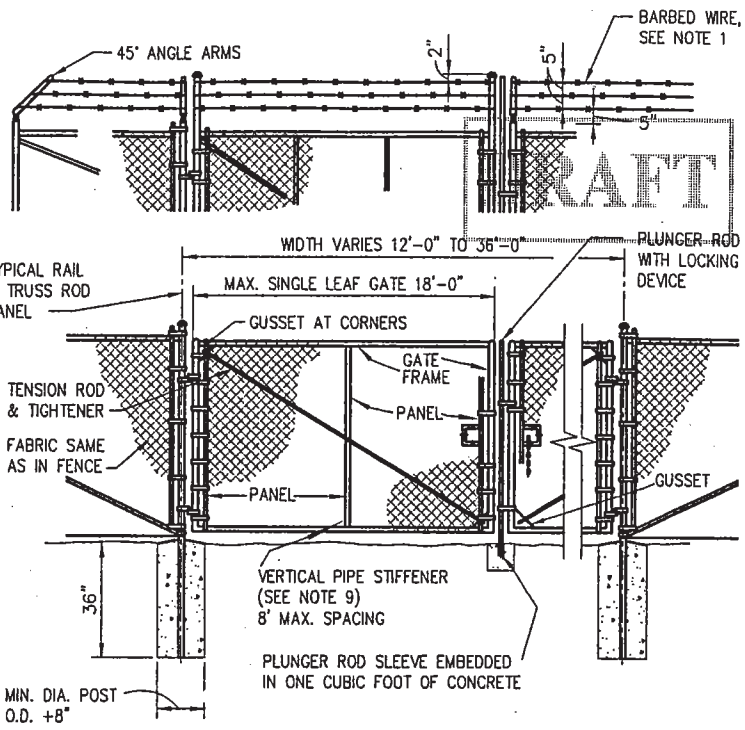

TYPICAL DRIVE GATE

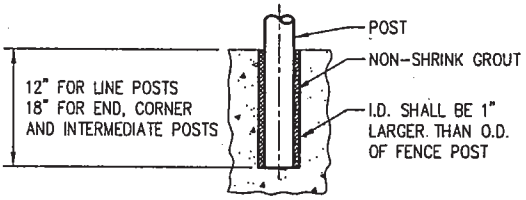

POST EMBEDMENT DETAIL IN CONCRETE HEADWALLS, RETAINING WALLS, CHANNEL WALLS, K-RAILS, ETC.

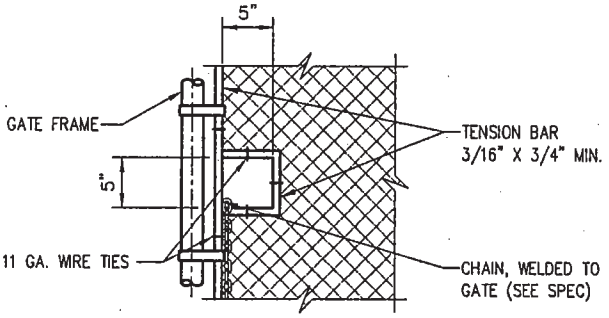

DETAIL OF CUT-OUT FOR ALL CHAIN AND LOCK GATES

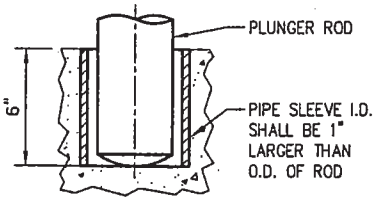

PLUNGER ROD SLEEVE DETAIL

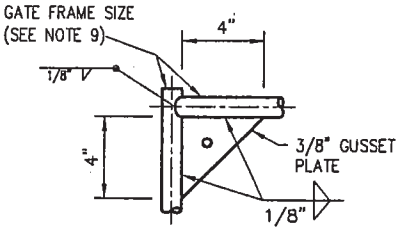

GUSSET DETAIL

NOTES:

1. ALL PANELS SHALL BE CONSTRUCTED WITH BARBED WIRE UNLESS OTHERWISE SPECIFIED.
2. A DRIVE FIT GALVANIZED CAP TO POST WITH 1/4" ROUND HEAD RIVET SHALL BE USED IF SPECIFIED.
3. FILL CLEAR OPENINGS GREATER THAN 3" WITH FABRIC. FOR OPENINGS LESS THAN 18", TIE FABRIC TO POSTS.
4. USE ONE POST FOR COMBINED SLOPE AND CORNER POST IF TOP OF CHANNEL WALL IS CONSTRUCTED AS SHOWN FOR "ALTERNATE".
5. STEEL BANDS AT TENSION BAR SHALL BE 1/8" X 1" MINIMUM, SPACED AT MAXIMUM 16".
6. CORNER, END, AND GATE POSTS SHALL NOT BE EQUIPPED WITH EXTENDERS, BUT SHALL BE OF SUFFICIENT HEIGHT TO SECURE THE BARBED WIRE.
7. ALL FENCE FABRIC SHALL BE TWISTED ON TOP AND BOTTOM UNLESS OTHERWISE SPECIFIED.
8. SEE SSPWC FOR ALL OTHER DETAILS AND FINISHES.
9. SEE STANDARD SPEC FOR PUBLIC WORKS CONSTRUCTION "GREENBOOK" THE LATEST PUBLISHED EDITION FOR DETAILS REGARDING FENCES AND GATES.

THE PORT OF LONG BEACH ENGINEERING DIVISION

REVISIONS			
NO.	DATE	CHAIN LINK FENCE AND GATES	STANDARD PLAN ST-19
1			
2			
3		APPROVED BY: CHIEF HARBOR ENGINEER — P.E. NO.: C-43065 — DATE: 5-17-04	2 OF 4

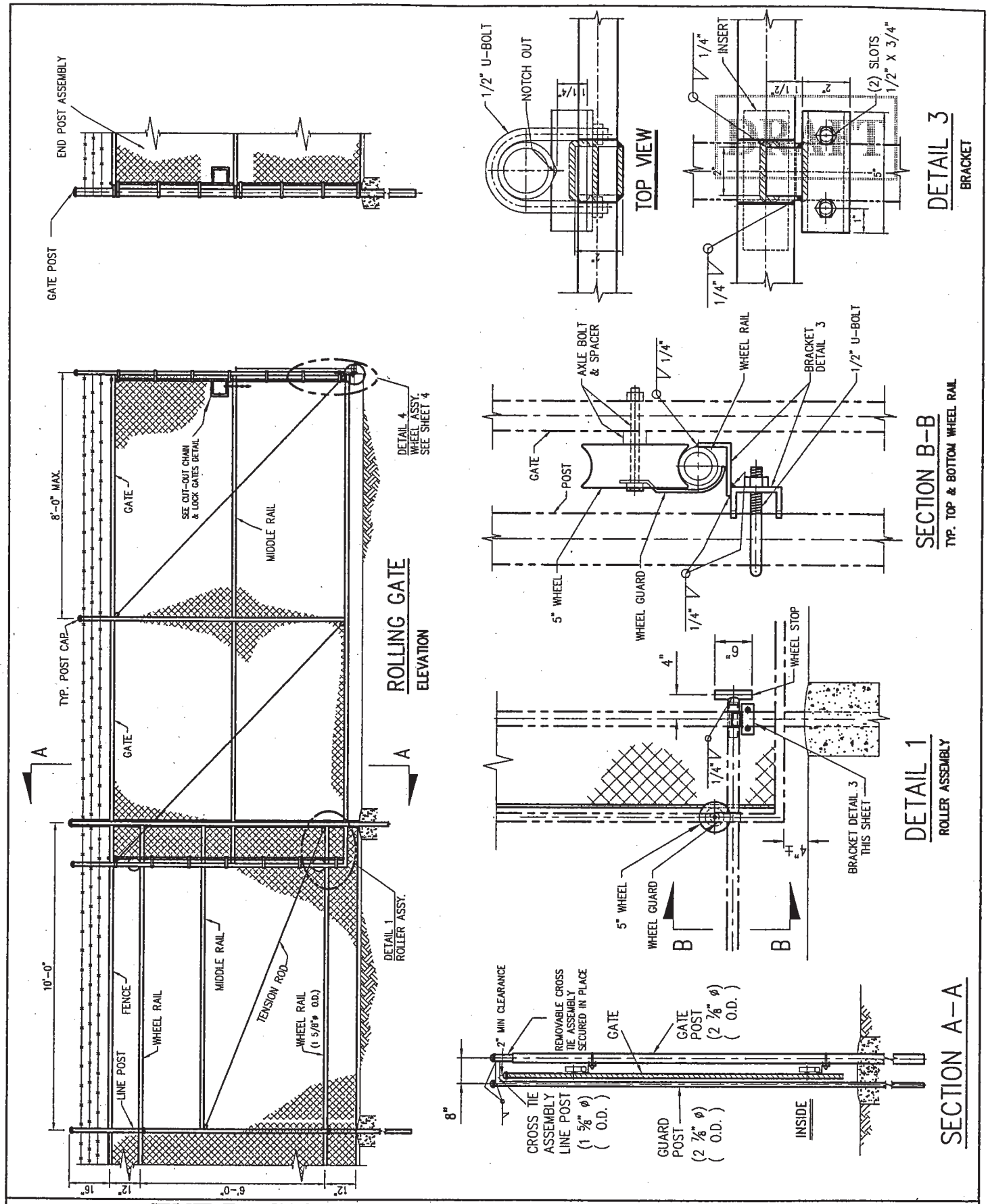

THE PORT OF LONG BEACH ENGINEERING DIVISION

REVISIONS	
NO.	DATE
1	
2	
3	

CHAIN LINK FENCE AND GATES

STANDARD PLAN

ST-19

APPROVED BY: D. Theissen
CHIEF HARBOR ENGINEER

P.E. NO.: C-43065 DATE: 5-17-04

3 OF 4

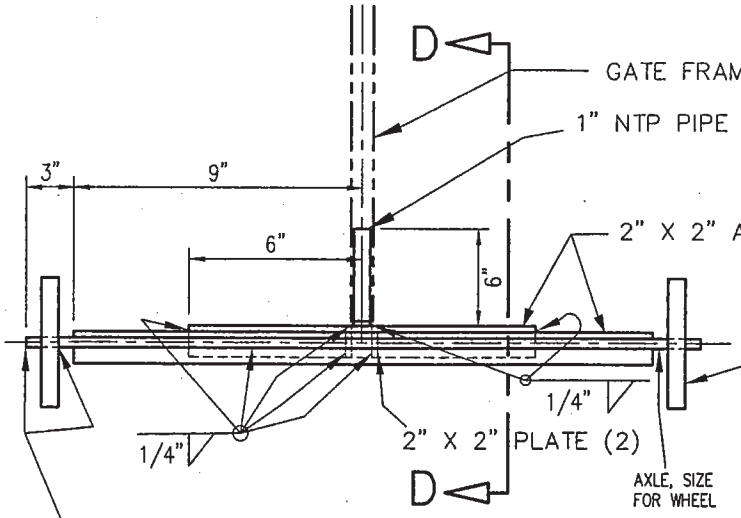

DETAIL 4

TRUCK DETAIL FOR
GATES 15' OR UNDER

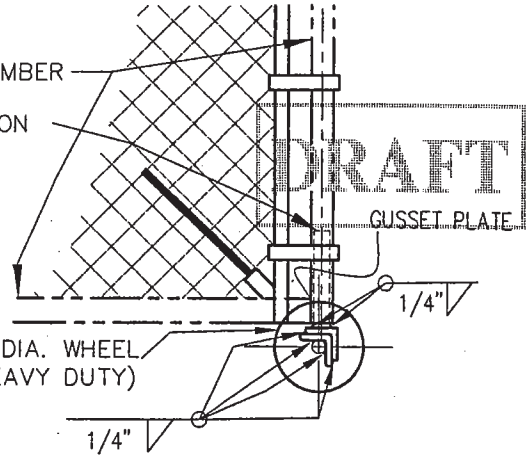

SECTION D–D

THE PORT OF LONG BEACH ENGINEERING DIVISION

REVISIONS	
NO.	DATE
1	
2	
3	

CHAIN LINK FENCE AND GATES

STANDARD PLAN

ST–19

APPROVED BY: D. Thiessen
CHIEF HARBOR ENGINEER

P.E. NO.: C–43065

DATE: 5–17–04

4 OF 4