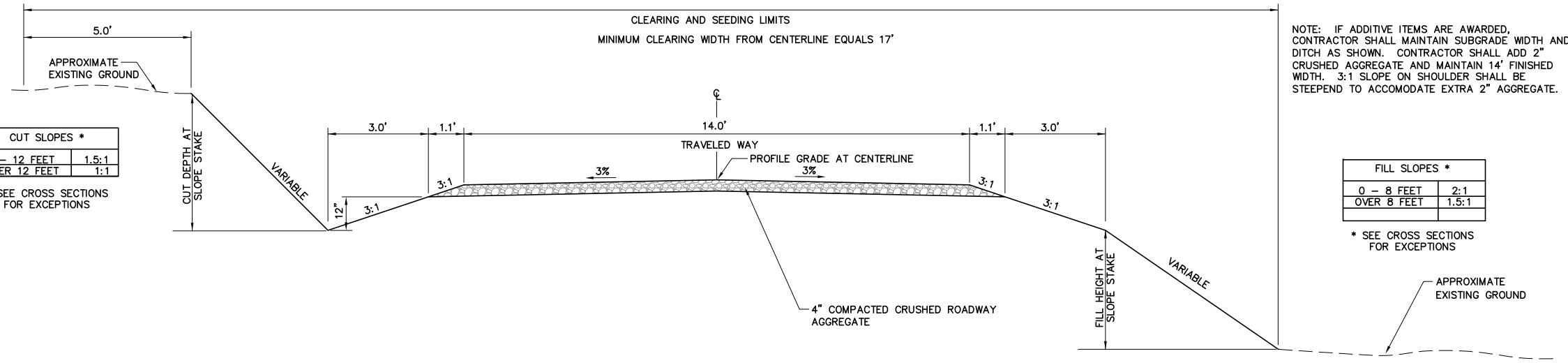

CUT SLOPES *	
0 – 12 FEET	1.5:1
OVER 12 FEET	1:1

* SEE CROSS SECTIONS FOR EXCEPTIONS

NOTE: IF ADDITIVE ITEMS ARE AWARDED, CONTRACTOR SHALL MAINTAIN SUBGRADE WIDTH AND DITCH AS SHOWN. CONTRACTOR SHALL ADD 2" CRUSHED AGGREGATE AND MAINTAIN 14' FINISHED WIDTH. 3:1 SLOPE ON SHOULDER SHALL BE STEEPEND TO ACCOMODATE EXTRA 2" AGGREGATE.

FILL SLOPES *	
0 – 8 FEET	2:1
OVER 8 FEET	1.5:1

* SEE CROSS SECTIONS FOR EXCEPTIONS

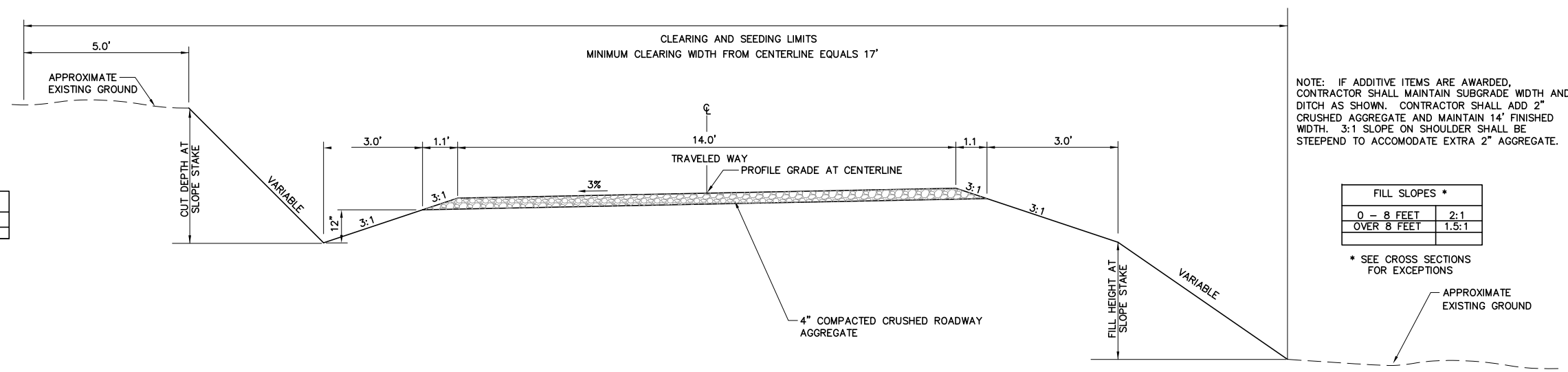

CUT SLOPES *	
0 –12 FEET	1.5:1
OVER 12 FEET	1:1

* SEE CROSS SECTIONS FOR EXCEPTIONS

NOTE: IF ADDITIVE ITEMS ARE AWARDED, CONTRACTOR SHALL MAINTAIN SUBGRADE WIDTH AND DITCH AS SHOWN. CONTRACTOR SHALL ADD 2" CRUSHED AGGREGATE AND MAINTAIN 14' FINISHED WIDTH. 3:1 SLOPE ON SHOULDER SHALL BE STEEPEND TO ACCOMODATE EXTRA 2" AGGREGATE.

FILL SLOPES *	
0 – 8 FEET	2:1
OVER 8 FEET	1.5:1

* SEE CROSS SECTIONS FOR EXCEPTIONS

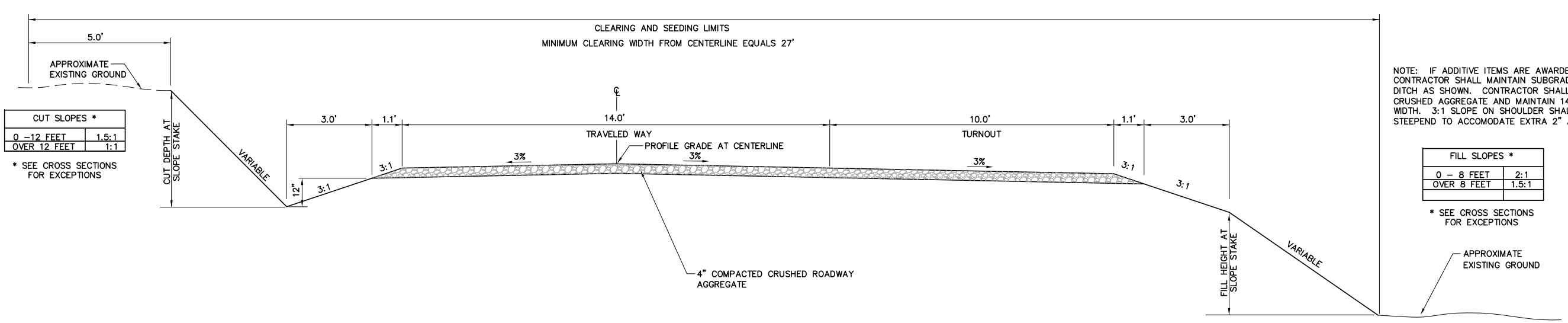

CUT SLOPES *	
0 –12 FEET	1.5:1
OVER 12 FEET	1:1

* SEE CROSS SECTIONS FOR EXCEPTIONS

NOTE: IF ADDITIVE ITEMS ARE AWARDED, CONTRACTOR SHALL MAINTAIN SUBGRADE WIDTH AND DITCH AS SHOWN. CONTRACTOR SHALL ADD 2" CRUSHED AGGREGATE AND MAINTAIN 14' FINISHED WIDTH. 3:1 SLOPE ON SHOULDER SHALL BE STEEPEND TO ACCOMODATE EXTRA 2" AGGREGATE.

FILL SLOPES *	
0 – 8 FEET	2:1
OVER 8 FEET	1.5:1

* SEE CROSS SECTIONS FOR EXCEPTIONS

AG-0355-S-09-0004

No.	Revision	By	Date
1	50% SUBMITTAL	WBL	6/23/06
2	95% SUBMITTAL	WBL	8/31/06
3	CONST. PLANS	WBL	11/10/06

WARNING
0 1 2
IF THIS BAR DOES NOT MEASURE 1" THEN DRAWING IS NOT TO SCALE

U.S.D.A. FOREST SERVICE – REGION 1
BEARTOOTH RANGER DISTRICT – CUSTER NATIONAL FOREST
RECONSTRUCTION OF WEST FORK ROCK CREEK ROAD #2071
PHASE III

GREAT WEST ENGINEERING
2030 11th. AVENUE
HELENA, MT 59601
(406) 449-8627, FAX (406) 449-8631

GreatWest engineering

Sheet No.
D–1

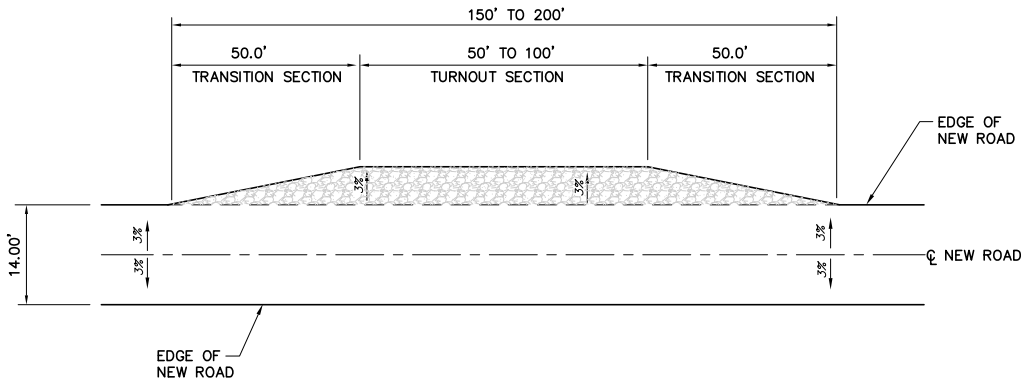

SEE PLANS FOR TURNOUT LOCATIONS.

DETAIL – TYPICAL TURNOUT

SCALE : NONE

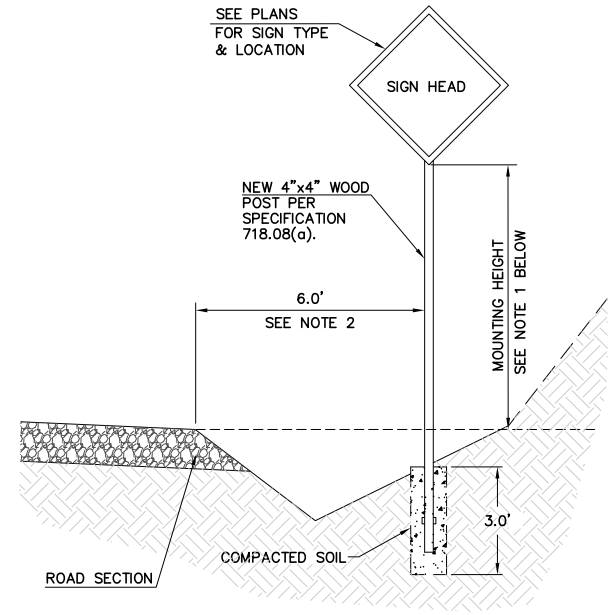

NOTES:

1. MOUNTING HEIGHTS ARE AS FOLLOWS:
   TRAILHEAD: ADA SIGNS – 5 FT
   OTHER SIGNS – 7 FT

   ROADWAY: SPEED LIMIT SIGNS – 7 FT
   OBJECT MARKERS – 4 F
   OTHER SIGNS – 7 FT

2. WHERE ROADSIDE TERRAIN LIMITS LATERAL OFFSET, LOCATE SIGNS 2' TO 6' FROM THE FINISHED SHOULDER.

3. OBTAIN APPROVAL FROM THE CONTRACTING OFFICER FOR ALL SIGN LOCATIONS PRIOR TO INSTALLATION.

DETAIL – TYPICAL SIGN INSTALLATION

SCALE : NONE

AG-0355-S-09-0004

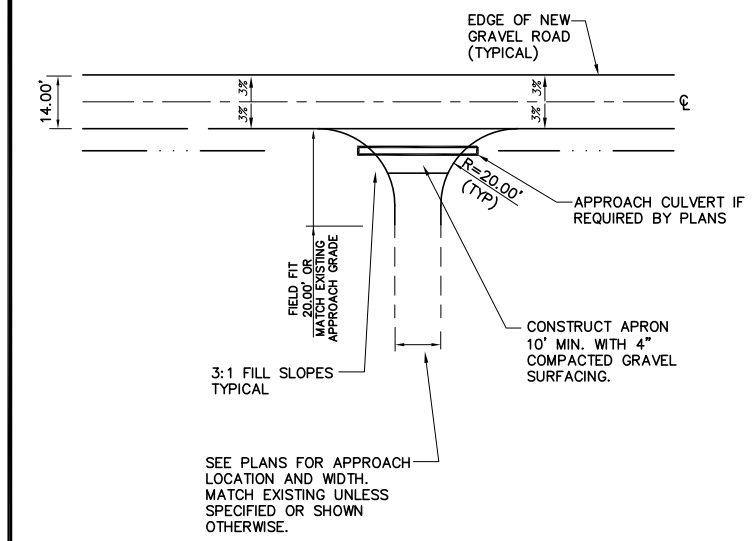

DETAIL – TYPICAL APPROACH RECONSTRUCTION

SCALE : NONE

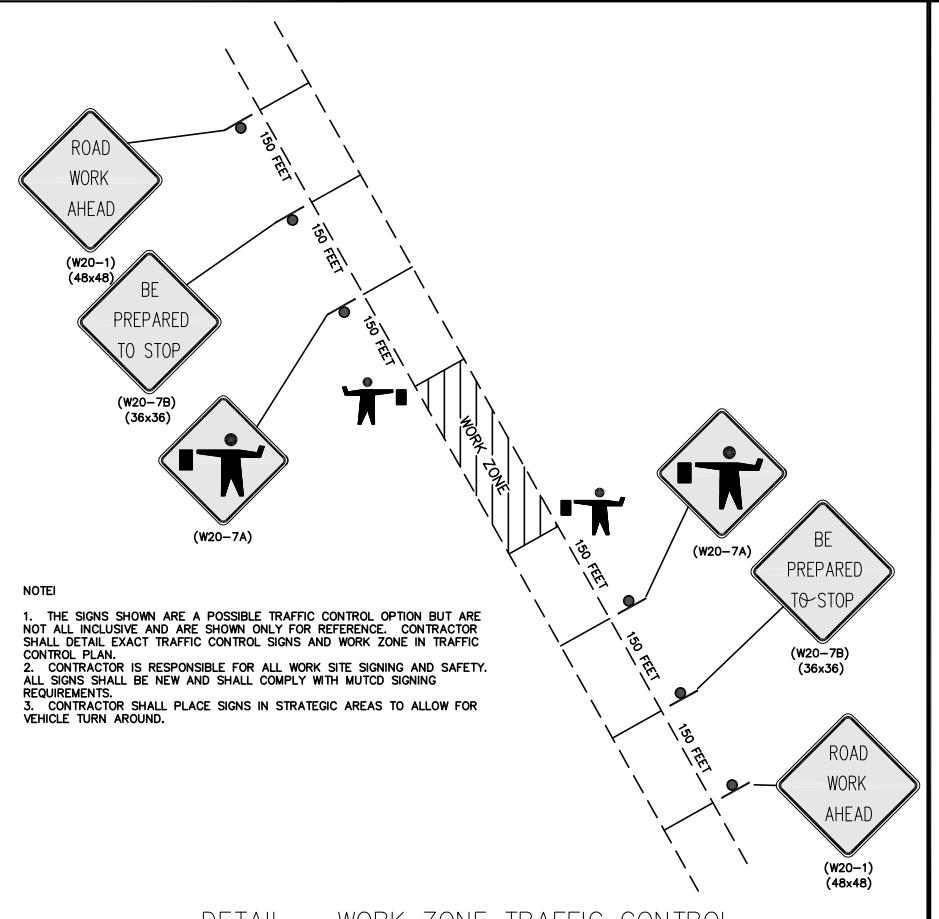

NOTE:

1. THE SIGNS SHOWN ARE A POSSIBLE TRAFFIC CONTROL OPTION BUT ARE NOT ALL INCLUSIVE AND ARE SHOWN ONLY FOR REFERENCE. CONTRACTOR SHALL DETAIL EXACT TRAFFIC CONTROL SIGNS AND WORK ZONE IN TRAFFIC CONTROL PLAN.
2. CONTRACTOR IS RESPONSIBLE FOR ALL WORK SITE SIGNING AND SAFETY. ALL SIGNS SHALL BE NEW AND SHALL COMPLY WITH MUTCD SIGNING REQUIREMENTS.
3. CONTRACTOR SHALL PLACE SIGNS IN STRATEGIC AREAS TO ALLOW FOR VEHICLE TURN AROUND.

DETAIL – WORK ZONE TRAFFIC CONTROL

SCALE : NONE

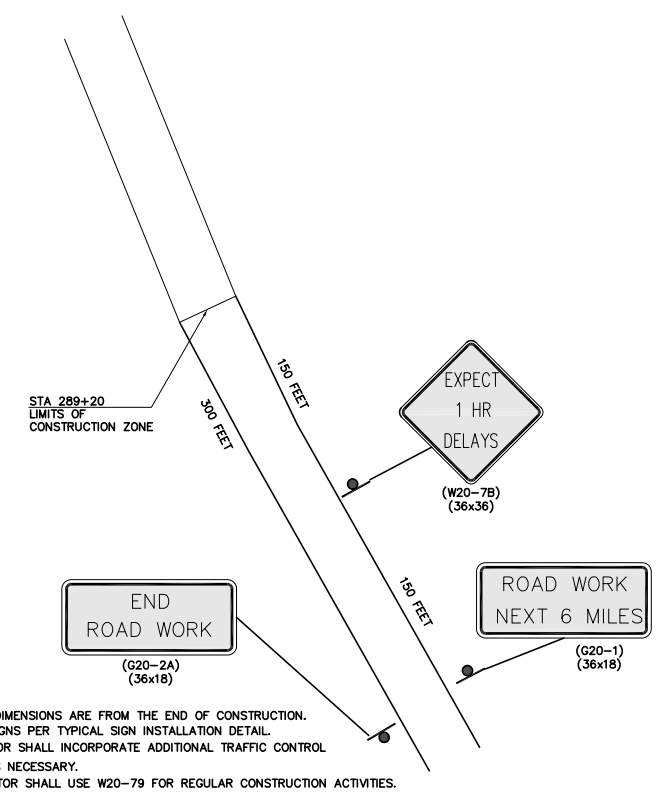

NOTES:

1. ALL SIGN DIMENSIONS ARE FROM THE END OF CONSTRUCTION.
2. INSTALL SIGNS PER TYPICAL SIGN INSTALLATION DETAIL.
3. CONTRACTOR SHALL INCORPORATE ADDITIONAL TRAFFIC CONTROL MEASURES AS NECESSARY.
4. CONTRACTOR SHALL USE W20-79 FOR REGULAR CONSTRUCTION ACTIVITIES. CONTRACTOR SHALL USE W20-79 EXPECT 3 HR DELAYS FOR REGULAR CULVERT INSTALLS. CONTRACTOR SHALL DETAIL ALL SIGNS AND TIME PERIODS FOR ANY CLOSURE GREATER THAN 3 HOURS IN THE TRAFFIC CONTROL PLAN.
5. SIGNS SHOWN ARE SUGGESTIONS ONLY, AND SHALL BE DETAILED BY THE CONTRACTOR IN THE TRAFFIC CONTROL PLAN. CONTRACTOR SHOULD EXPECT TO PLACE W20-79 IMMEDIATELY AT TRAFFIC CONTROL ZONE AS WELL AS AT LOCATIONS FOR ADVANCED WARNING.

DETAIL – TEMPORARY TRAFFIC CONTROL

SCALE : NONE

No.	Revision	By	Date
1	50% SUBMITTAL	RDH	12/1/03
2	95% SUBMITTAL	JG	1/30/04
3	CONST. PLANS	JG	2/29/04

WARNING
0 1 2
IF THIS BAR DOES NOT MEASURE 1" THEN DRAWING IS NOT TO SCALE

U.S.D.A. FOREST SERVICE – REGION 1
BEARTOOTH RANGER DISTRICT – CUSTER NATIONAL FOREST
RECONSTRUCTION OF WEST FORK ROCK CREEK ROAD #2071
PHASE III
MISCELLANEOUS DETAILS

● Project No. 04M551.103 ● D-2 LAYOUT ● Date FEB 2004 ● Designed LHB ● Drawn JG ● Checked LHB ● Approved

Sheet No.
D–2

F:\1-06148-USFS W FORK ROCK CREEK\CADD-06148\M551103\SHEETS\DET-SHEETS.dwg 11/8/2006 1:28:51 PM MST

Copyright © 2004 HKM Engineering Inc., All Rights Reserved.

AG-0355-S-09-0004

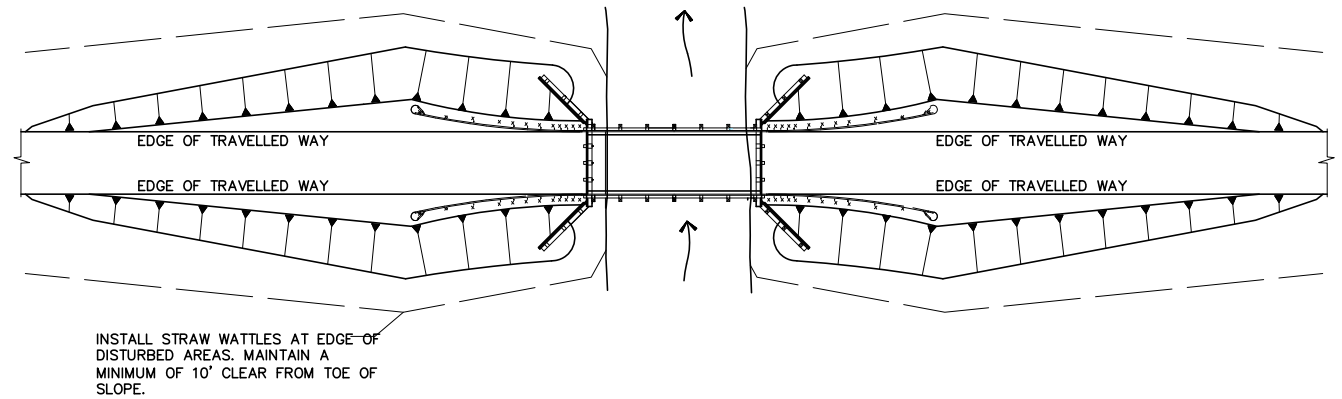

LOCATION OF STRAW WATTLES AT BRIDGE

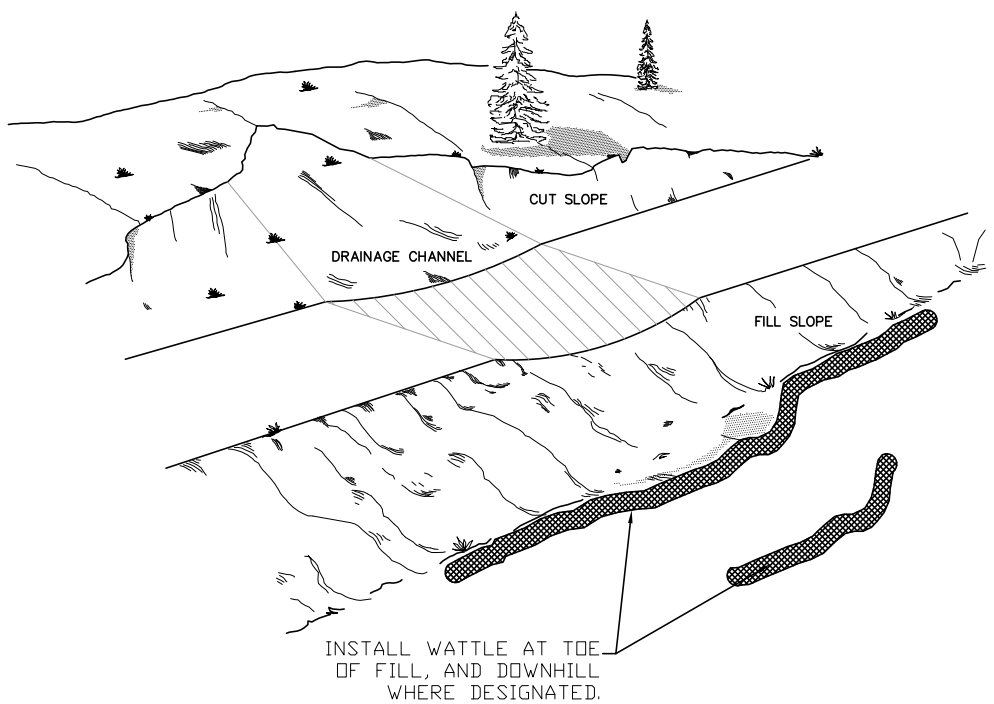

NOTES:

1. STRAW WATTLE INSTALLATION REQUIRES THE PLACEMENT AND SECURE STAKING OF THE ROLL IN A TRENCH, DUG 3"–5" ON CONTOUR. RUNOFF MUST NOT BE ALLOWED TO RUN UNDER OR AROUND ROLL.

2. PLACE WATTLES ALONG TOE OF FILL AT DRAINAGE CONCENTRATIONS, SUCH AS: CULVERT CROSS–DRAINS, ROLLING DIPS AND SAG GRADE REVERSALS. INSTALL WATTLES ON CONTOURS SPACED DOWNHILL AS REQUIRED.

3. STRAW SHALL BE WEED FREE CERTIFIED.

4. STAKES SHALL BE MINIMUM 18" LENGTH AND PLACED AT EACH END AND EVERY 3'–4' ALONG LENGTH OF WATTLES. DRIVE STAKE UNTIL WATTLE IS SECURE TO SLOPE, DO NOT CRUSH WATTLE WHILE STAKING.

5. LIVE STAKES MAY BE USED WITH APPROVED SPECIES. INSERT ENTIRE ROOT THROUGH WATTLE AND INTO GROUND WITHOUT DAMAGE TO TREE OR WATTLE.

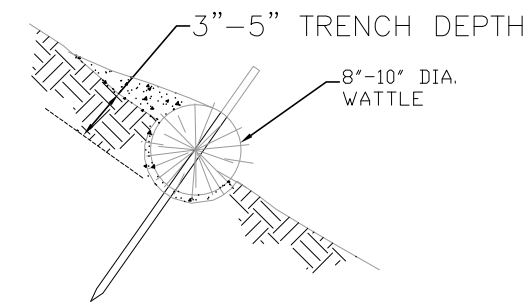

1" X 1" STAKE

NOT TO SCALE

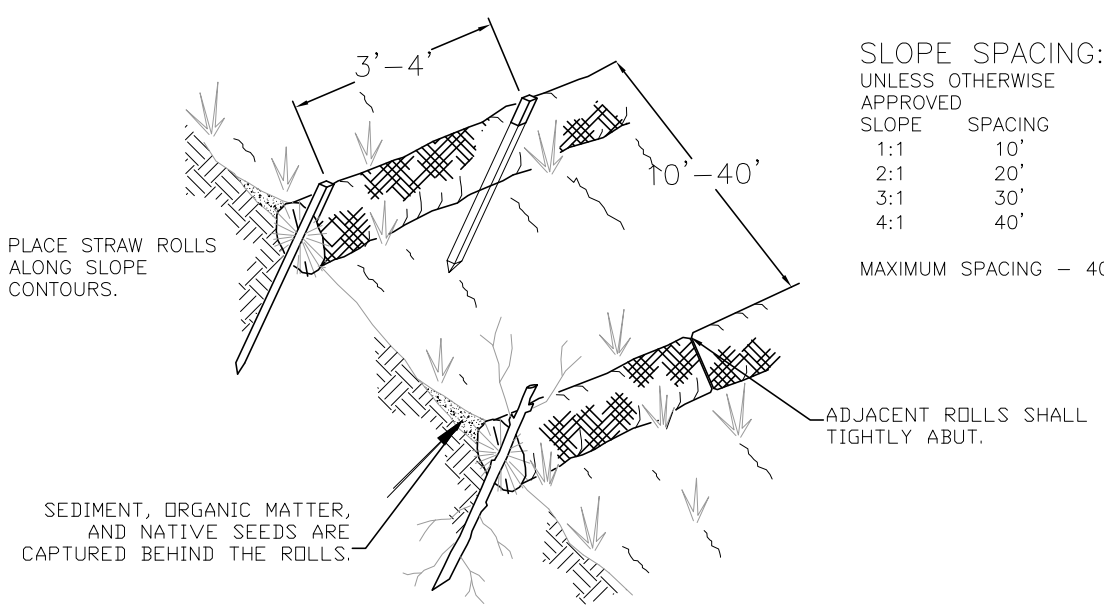

SLOPE SPACING:

UNLESS OTHERWISE APPROVED

SLOPE	SPACING
1:1	10'
2:1	20'
3:1	30'
4:1	40'

MAXIMUM SPACING – 40'

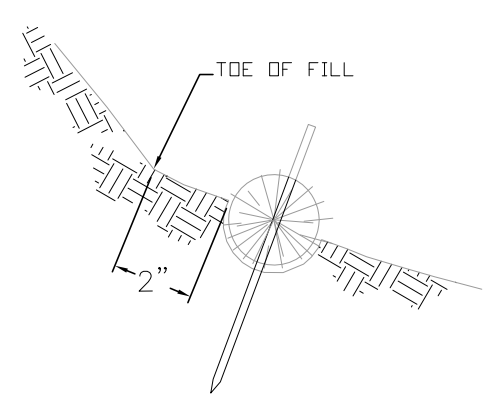

2" OFFSET FROM TOE

NOT TO SCALE

LIVE STAKE

NOT TO SCALE

No.	Revision	By	Date
1	50% SUBMITTAL	RDH	12/1/03
2	95% SUBMITTAL	JG	1/30/04
3	CONST. PLANS	JG	2/29/04
4			

WARNING 0 1 2 IF THIS BAR DOES NOT MEASURE 1" THEN DRAWING IS NOT TO SCALE

Project No. 04M551.103 ● D-2 LAYOUT ● Date FEB 2004 ● Designed LHB ● Drawn JG ● Checked LHB ● Approved

U.S.D.A. FOREST SERVICE – REGION 1
BEARTOOTH RANGER DISTRICT – CUSTER NATIONAL FOREST
RECONSTRUCTION OF WEST FORK ROCK CREEK ROAD #2071
PHASE III
MISCELLANEOUS DETAILS

Sheet No.
D–3

U.S.F.S.
GATE DETAIL

ALL DRAWINGS, NO SCALE

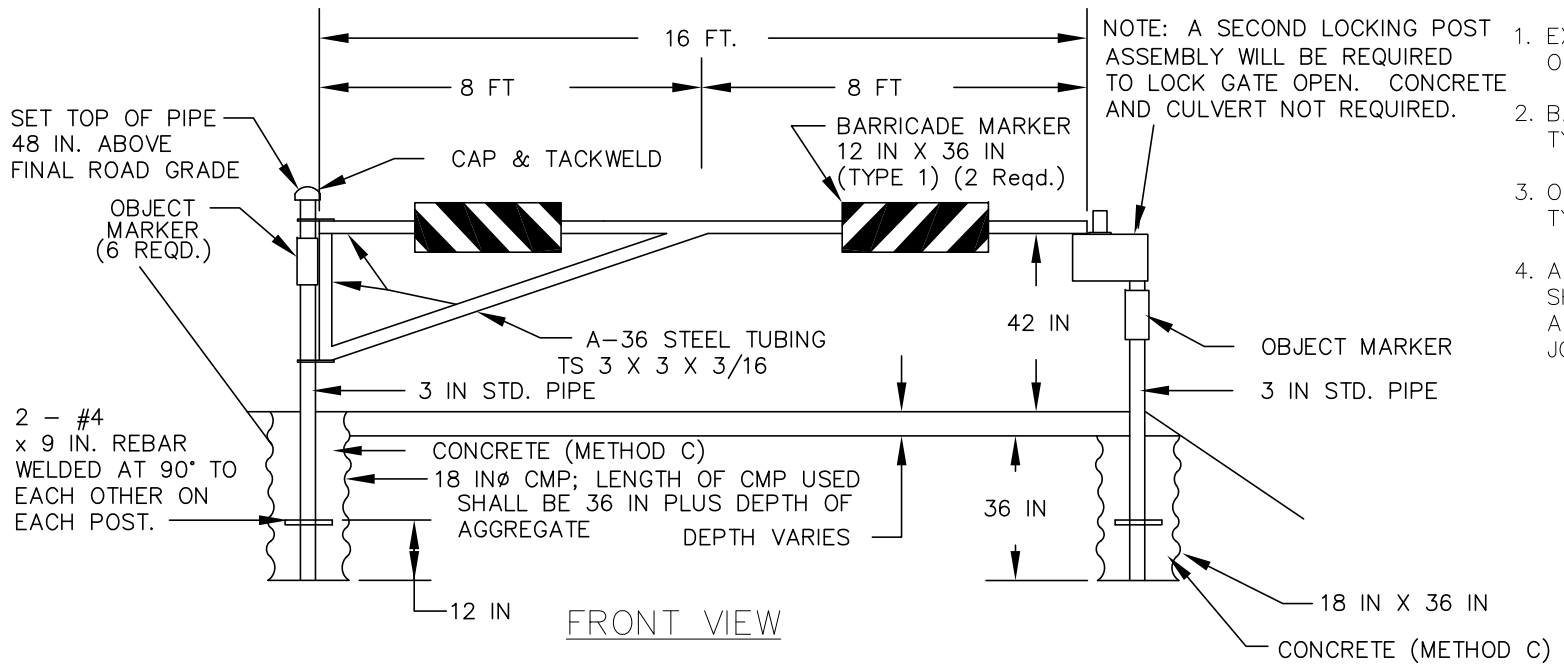

FRONT VIEW

NOTES

1. EXTERIOR ENAMEL SHALL BE TYPE 1, DARK GREEN; UNLESS OTHERWISE APPROVED BY THE ENGINEER.
2. BARRICADE MARKERS SHALL MEET MUTCD REQUIREMENTS FOR TYPE 1. COLOR – RED & WHITE. (2 REQUIRED.)
3. OBJECT MARKERS SHALL MEET MUTCD REQUIREMENTS FOR TYPE 2. (6 REQUIRED.)
4. ALL WELDS REQUIRED TO MANUFACTURE GATE, UNLESS OTHERWISE SHOWN, SHALL BE FILLET AND SHALL BE OF THE SAME SIZE AS THE THICKNESS OF THE SMALLER OF THE TWO PIECES BEING JOINED.

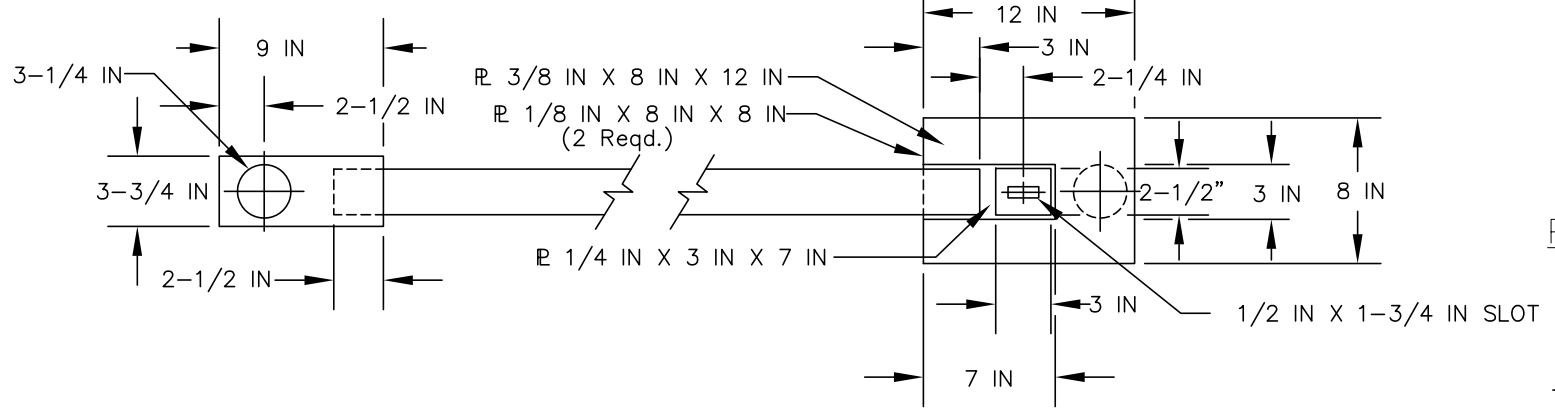

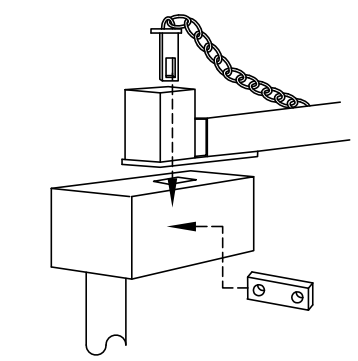

PERSPECTIVE VIEW
(LOCKING ASSEMBLY)

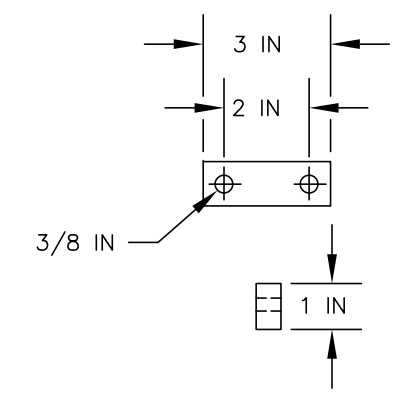

LOCK PIN DETAIL

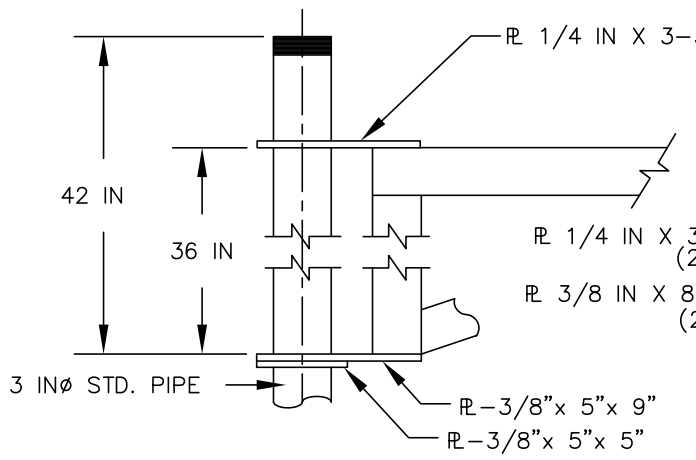

HINGE POST DETAIL

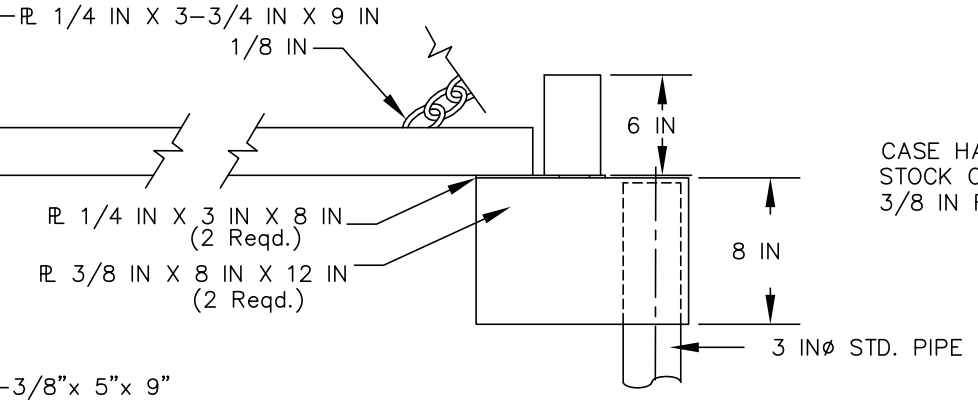

LOCKING POST DETAIL

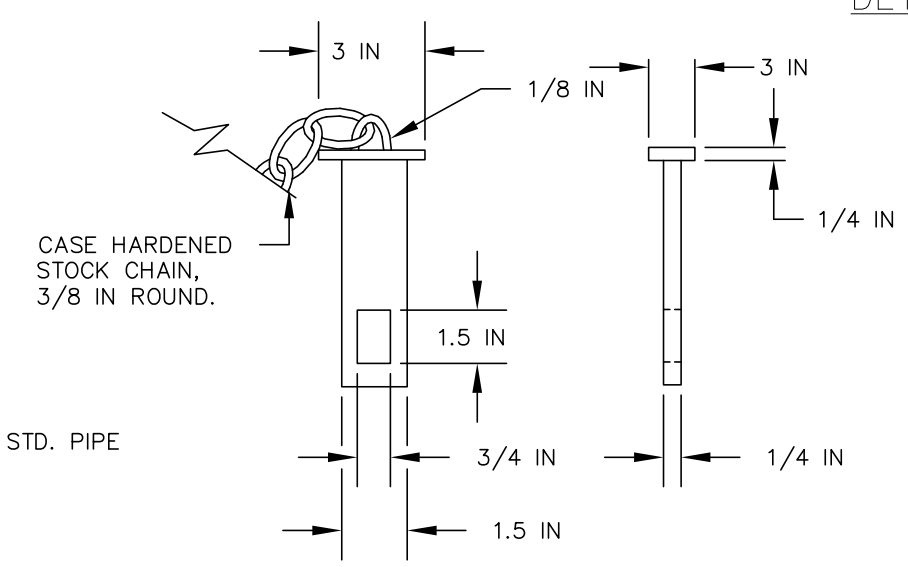

MASTER PIN DETAIL

AG-0355-S-09-0004

No.	Revision	By	Date
1	50% SUBMITTAL	RDH	12/1/03
2	95% SUBMITTAL	JG	1/30/04
3	CONST. PLANS	JG	2/29/04

WARNING
0 1 2
IF THIS BAR DOES NOT MEASURE 1" THEN DRAWING IS NOT TO SCALE

● Project No. 04M551.103 ● D-2 LAYOUT ● Date FEB 2004 ● Designed LHB ● Drawn JG ● Checked LHB ● Approved

U.S.D.A. FOREST SERVICE – REGION 1
BEARTOOTH RANGER DISTRICT – CUSTER NATIONAL FOREST
RECONSTRUCTION OF WEST FORK ROCK CREEK ROAD #2071
PHASE III
MISCELLANEOUS DETAILS

Sheet No.
D-4

F:\1-06148-USFS W FORK ROCK CREEK\CADD-06148\M551103\SHEETS\DET-SHEETS.dwg 11/8/2006 1:28:51 PM MST

Copyright © 2004 HKM Engineering Inc., All Rights Reserved.

AG-0355-S-09-0004

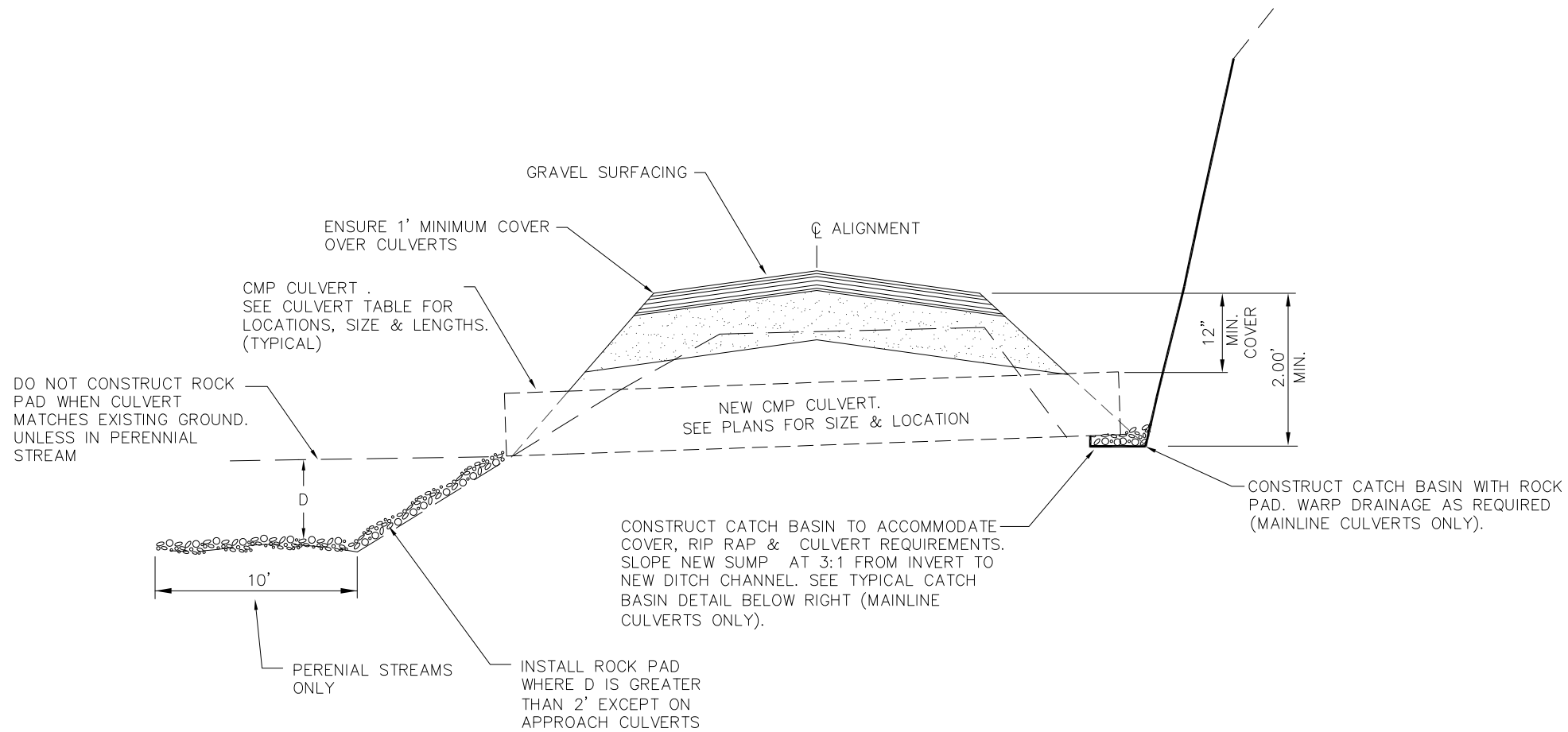

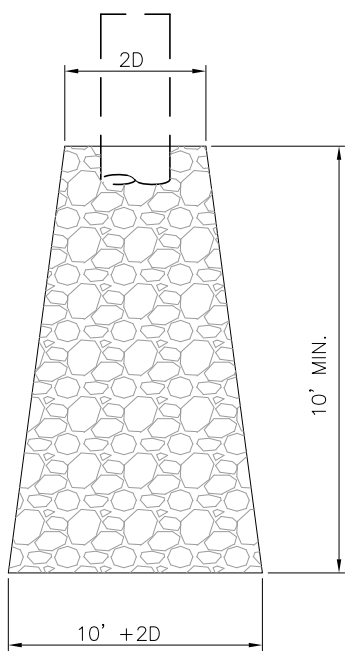

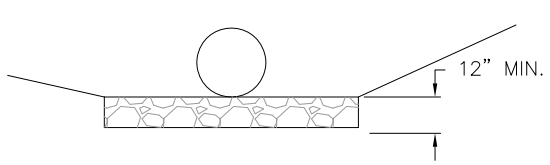

TYPICAL ROCK PAD AT OUTFALL

NOTES:

1. ROCK PAD DIMENSION SHALL BE BASED ON PIPE DIAMETER. LENGTH AND WIDTH SHALL EQUAL 2xO.D. (4' MIN.). PAD THICKNESS SHALL BE 12" MIN.
2. SMALL CULVERT ROCK SHALL BE NATIVE ROCK 4" – 16" ø.
4. NEW CULVERT INSTALLATION & CULVERT EXTENSIONS SHALL BE APPROVED BY C.O.R. SUCH AS TO MINIMIZE THE NUMBER OF BANDED JOINTS.
5. CULVERT LENGTHS SHOWN ON PLANS ARE APPROXIMATE. ACTUAL CULVERT EXTENSION LENGTHS SHALL BE FIELD VERIFIED BASED ON CONSTRUCTION STAKING. THE CONTRACTOR SHALL CONFIRM CULVERT SIZES AND LENGTHS PRIOR TO ORDERING.
6. CULVERT BANDS: BANDS WITH DIMPLED PROJECTIONS ARE NOR ACCEPTABLE

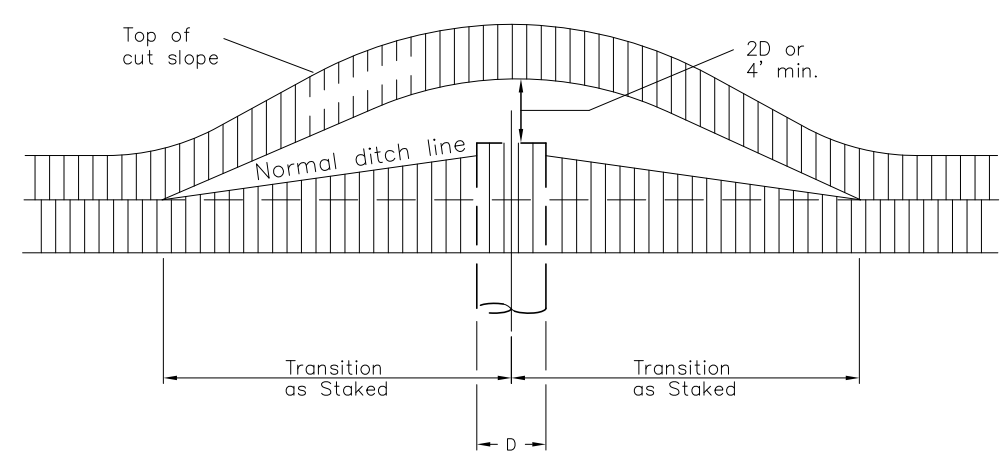

TYPICAL CATCH BASIN DETAIL

● Project No. 04M551.103 ● D-2 LAYOUT ● Date FEB 2004 ● Designed LHB ● Drawn JG ● Checked LHB ● Approved

No.	Revision	By	Date
1	50% SUBMITTAL	RDH	12/1/03
2	95% SUBMITTAL	JG	1/30/04
3	CONST. PLANS	JG	2/29/04

WARNING
0 1 2
IF THIS BAR DOES NOT MEASURE 1" THEN DRAWING IS NOT TO SCALE

U.S.D.A. FOREST SERVICE – REGION 1
BEARTOOTH RANGER DISTRICT – CUSTER NATIONAL FOREST
RECONSTRUCTION OF WEST FORK ROCK CREEK ROAD #2071
PHASE III
CULVERT DETAILS

Sheet No.
D–5

Copyright © 2004 URS Engineering Inc. All Rights Reserved

AG-0355-S-09-0004

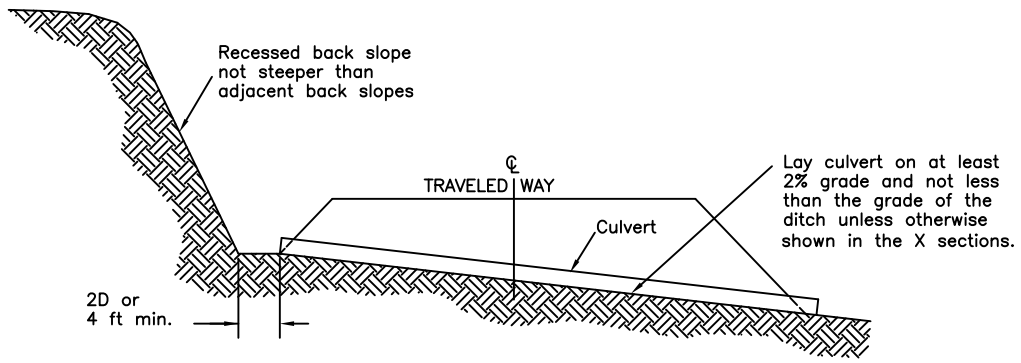

TYPICAL INSTALLATION IN CUT SECTION

GENERAL NOTES

CAMBER: Pipes shall be cambered as necessary to compensate for any anticipated settlement in the foundation or bed. Camber shall be on a parabolic curve, with no point along the invert being higher than the invert at the inlet.

CULVERT BANDS: Bands with dimpled projections are not acceptable.

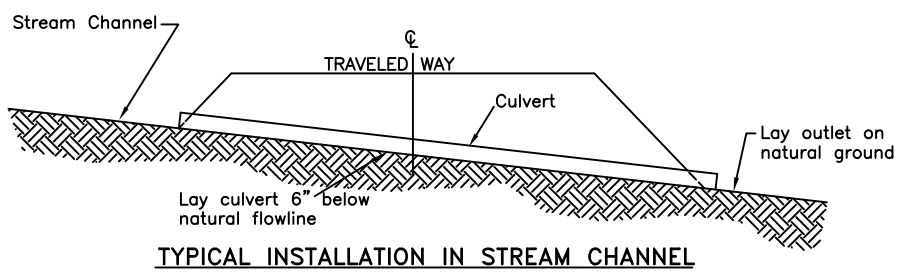

TYPICAL INSTALLATION IN STREAM CHANNEL

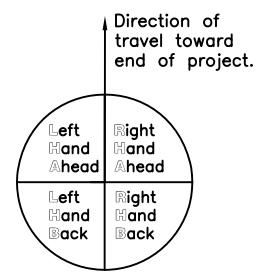

CULVERT SKEW

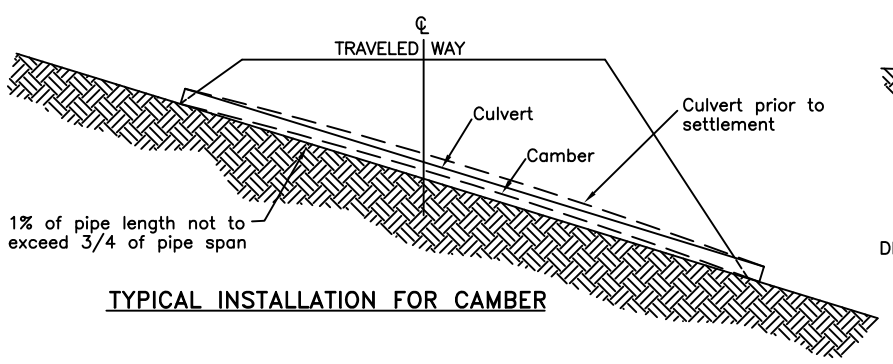

TYPICAL INSTALLATION FOR CAMBER

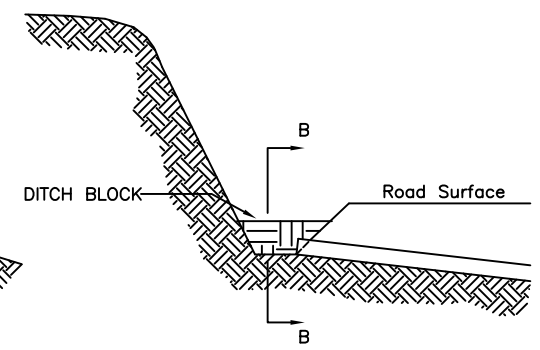

DITCH BLOCK

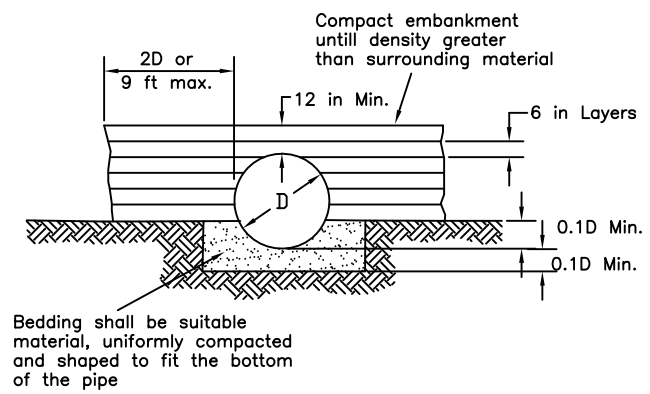

BACKFILL AND BEDDING DETAIL

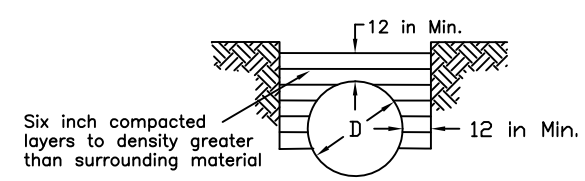

TYPICAL TRENCH DETAIL

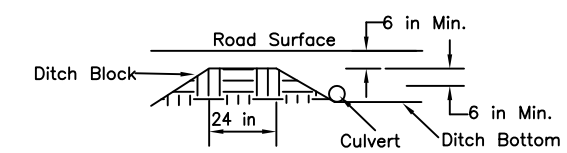

DITCH BLOCK: SECTION B–B

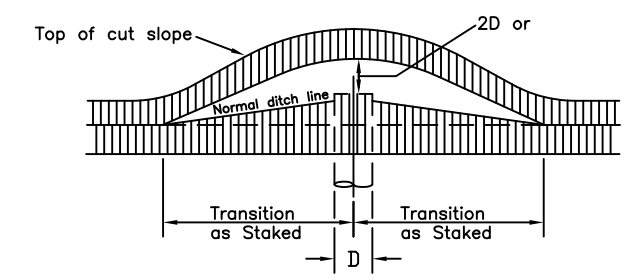

TYPICAL CATCH BASIN DETAIL

U.S. DEPARTMENT OF AGRICULTURE
FOREST SERVICE
R–1
NORTHERN REGION

DESIGNED BY Standard Drawing		FOREST CUSTER NATIONAL FOREST	SHEET TITLE CULVERT DETAIL
DRAWN BY Standard Drawing		PROJECT #2071 PHASE 3	SCALE NTS / D–6

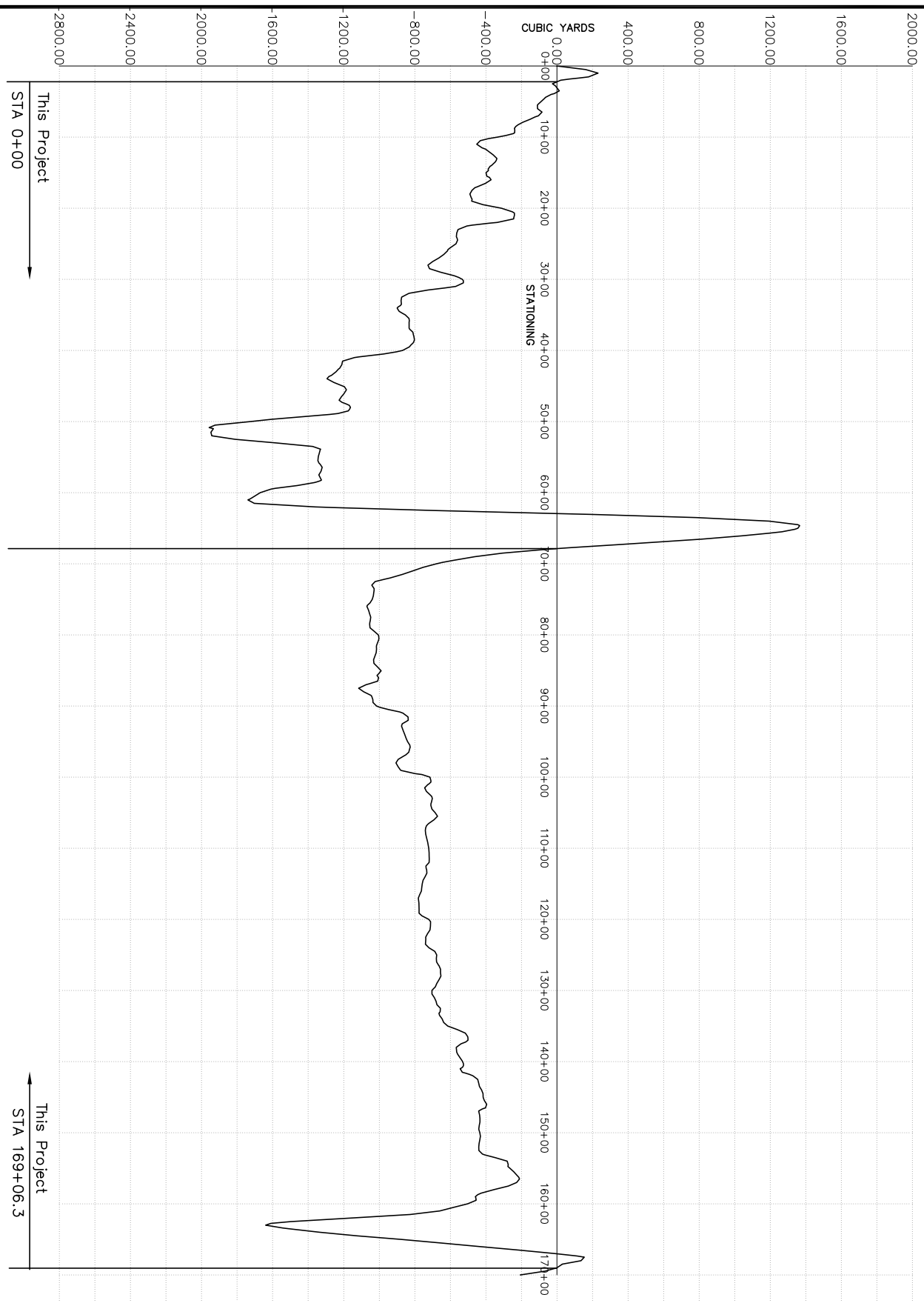

NOTE: OVERALL PROJECT MASS HAUL DIAGRAM REFLECTS A 25% SHRINK FACTOR

AG-0355-S-09-0004

Sheet No. D-7

GREAT WEST ENGINEERING
2030 11th. AVENUE
HELENA, MT 59601
(406) 449-8627, FAX (406) 449-8631

● Project No. 04M551.103 ●

U.S.D.A. FOREST SERVICE – REGION 1
BEARTOOTH RANGER DISTRICT – CUSTER NATIONAL FOREST

RECONSTRUCTION OF WEST FORK ROCK CREEK ROAD #2071
PHASE III
MASS – HAUL DIAGRAM

WARNING
0 ? 1
IF THIS BAR DOES NOT MEASURE 1" THEN DRAWING IS NOT TO SCALE

No.	Revision	By	Date
1	50% SUBMITTAL	WBL	6/23/06
2	95% SUBMITTAL	WBL	8/31/06
3	CONST. PLANS	WBL	11/10/06

STATION	AREAS Square Feet		VOLUMES Cubic Yards		CUMULATIVE VOLUMES Cubic Yards	
	CUT	FILL	CUT	FILL	CUT	FILL
0+00	155.32	15.98				
			179.75	18.50	179.75	18.50
0+50	38.81	0.00				
			71.48	1.63	251.23	20.13
1+00	38.40	1.40				
			40.25	93.11	291.48	113.24
1+53.15	2.50	74.28				
			0.82	57.00	292.30	170.23
1+70	0.24	103.35				
			0.34	51.36	292.64	221.59
1+84.69	1.06	86.23				
			0.88	50.36	293.52	271.96
2+00	2.04	55.89				
			20.12	66.75	313.64	338.71
2+50	19.69	1.78				
			20.11	4.68	333.75	343.39
2+77.18	20.28	5.66				
			16.74	8.72	350.49	352.11
3+00	21.81	10.16				
			44.50	29.19	394.99	381.29
3+50	29.10	13.62				
			21.25	50.02	416.24	431.31
3+89	1.79	37.97				
			0.50	18.00	416.74	449.31
4+00	0.74	27.84				
			3.54	36.54	420.28	485.84
4+43.82	3.75	6.11				
			0.66	2.20	420.94	488.05
4+50	2.03	9.29				
			2.32	26.20	423.26	514.24
5+05.65	0.22	11.04				
			0.21	14.14	423.47	528.38
5+37.18	0.13	8.94				
			0.12	5.20	423.59	533.58
5+50	0.38	8.57				
			15.83	14.93	439.42	548.50
6+00	16.72	4.32				
			37.49	12.03	476.91	560.53
6+49.27	24.38	6.22				
			31.90	52.16	508.81	612.69
7+00	11.46	36.27				
			6.18	25.78	515.00	638.47
7+16.83	9.42	26.02				
			10.71	39.22	525.71	677.70
7+50	8.01	25.06				
			11.24	51.52	536.94	729.22
7+92.95	6.11	26.76				
			1.60	7.86	538.54	737.08
8+00	5.52	23.68				
			6.59	29.15	545.13	766.24
8+31.81	5.13	17.58				
			3.08	13.29	548.21	779.53
8+50	4.49	12.95				
			5.03	12.72	553.24	792.25
8+77.72	5.83	6.39				
			6.11	4.23	559.35	796.48
9+00	8.98	1.82				
			8.23	9.16	567.58	805.64
9+38.29	2.62	8.52				
			0.73	6.99	568.30	812.63
9+50	0.89	16.38				
			0.70	42.26	569.01	854.89
9+77.96	0.51	45.56				
			1.20	49.01	570.21	903.90
10+00	2.43	50.51				
			2.56	54.37	572.76	958.27
10+22	3.85	56.24				
			2.33	47.84	575.09	1006.10
10+50	0.65	17.56				
			3.51	23.81	578.61	1029.91
11+00	3.15	3.01				
			46.29	17.08	624.90	1047.00
11+50	46.85	11.75				
			28.82	7.61	653.72	1054.61
11+71.26	26.36	3.71				
			20.36	4.66	674.08	1059.26
12+00	10.08	3.11				
			33.50	6.54	707.58	1065.80
12+50	24.73	2.34				
			25.99	5.81	733.57	1071.61
13+00	2.96	2.56				
			0.81	1.86	734.39	1073.47
13+12.27	0.64	3.88				
			0.80	3.32	735.18	1076.79
13+30	1.79	4.22				
			0.68	6.05	735.86	1082.84
13+50	0.05	8.85				
			0.58	21.94	736.45	1104.78
14+00	0.58	10.10				
			0.18	7.51	736.63	1112.29
14+10	0.41	22.33				
			35.27	46.57	771.90	1158.85
14+50	47.20	27.96				
			24.16	22.19	796.06	1181.05
14+70.08	17.78	19.78				
			17.69	31.78	813.75	1212.83
15+00	15.30	24.99				
			37.08	32.57	850.83	1245.40
15+50	26.07	2.80				
			17.51	3.00	868.34	1248.39
15+66.55	32.80	4.99				
			23.66	14.41	891.99	1262.80
16+00	5.39	13.61				
			6.55	37.22	898.55	1300.02
16+50	1.69	18.55				
			5.56	53.15	904.10	1353.18
17+00	4.31	27.38				
			3.15	15.71	907.26	1368.89
17+13	8.79	24.83				
			0.23	0.79	907.49	1369.68
17+13.69	9.09	24.36				
			6.52	22.70	914.00	1392.38
17+50	0.29	4.25				
			0.67	3.41	914.67	1395.78
17+63.23	2.35	7.36				
			6.08	14.65	920.76	1410.43
18+00	6.58	9.85				
			19.32	12.20	940.07	1422.63

STATION	AREAS Square Feet		VOLUMES Cubic Yards		CUMULATIVE VOLUMES Cubic Yards	
	CUT	FILL	CUT	FILL	CUT	FILL
18+50	14.28	0.69				
			8.82	3.55	948.89	1426.19
18+74.99	4.77	5.46				
			7.45	10.17	956.34	1436.36
19+00	10.55	12.63				
			109.89	46.32	1066.23	1482.68
19+50	100.00	29.13				
			165.12	61.01	1231.35	1543.69
20+00	63.37	26.06				
			104.73	43.55	1336.08	1587.23
20+50	40.89	12.89				
			22.31	10.08	1358.39	1597.32
20+69.58	16.32	9.80				
			9.47	9.83	1367.87	1607.15
21+00	0.49	4.16				
			2.69	6.29	1370.56	1613.44
21+41.23	3.03	2.43				
			1.03	1.01	1371.59	1614.44
21+50	2.90	2.76				
			2.98	95.69	1374.57	1710.13
22+00	0.25	74.13				
			0.12	42.97	1374.69	1753.09
22+09.99	0.42	82.16				
			0.22	87.68	1374.91	1840.78
22+35	0.04	69.27				
			0.00	7.33	1374.91	1848.11
22+37.33	0.02	66.68				
			0.32	33.51	1375.23	1881.62
22+50	1.39	42.24				
			2.81	52.68	1378.04	1934.29
23+00	1.72	2.72				
			2.22	9.93	1380.27	1944.23
23+50	0.68	5.88				
			7.04	8.91	1387.30	1953.13
24+00	6.96	1.83				
			7.29	2.42	1394.59	1955.55
24+28.08	7.50	1.94				
			3.68	2.16	1398.27	1957.71
24+50	1.45	2.33				
			1.92	10.33	1400.19	1968.04
25+00	0.61	6.66				
			0.92	33.29	1401.11	2001.33
25+57	0.26	18.86				
			0.46	13.17	1401.57	2014.50
25+82.58	0.70	3.52				
			0.66	3.62	1402.23	2018.12
26+00	1.35	5.46				
			3.18	23.49	1405.40	2041.61
26+50	2.08	14.84				
			2.43	16.34	1407.84	2057.96
26+75	3.18	13.40				
			2.90	17.10	1410.74	2075.06
27+00	3.09	16.15				
			4.16	38.68	1414.90	2113.74
27+50	1.41	17.27				
			2.83	29.74	1417.73	2143.48
28+00	1.65	8.43				
			28.36	19.66	1446.10	2163.14
28+50	28.99	8.56				
			81.67	19.26	1527.77	2182.40
29+00	59.21	8.08				
			99.54	21.72	1627.31	2204.12
29+50	48.29	10.69				
			36.41	11.77	1663.72	2215.89
29+73.97	33.73	10.52				
			31.20	11.25	1694.92	2227.14
30+00	24.93	8.58				
			15.29	9.78	1710.21	2236.92
30+19	14.93	14.14				
			15.75	15.82	1725.97	2252.74
30+50.95	9.75	7.75				
			10.10	52.86	1736.06	2305.60
31+00	1.37	38.81				
			0.80	62.72	1736.86	2368.32
31+22.97	0.51	79.15				
			5.62	99.22	1742.48	2467.54
31+50	10.91	65.60				
			12.74	116.92	1755.22	2584.46
31+95.72	5.05	35.73				
			0.77	6.39	1755.99	2590.85
32+00	4.39	31.60				
			7.15	45.99	1763.14	2636.84
32+50	3.13	9.49				
			13.23	16.34	1776.37	2653.18
33+00	10.76	4.92				
			13.89	12.40	1790.26	2665.58
33+50	3.78	5.91				
			1.90	6.95	1792.16	2672.54
33+68.27	1.69	10.73				
			0.85	12.96	1793.01	2685.49
33+87	0.76	19.16				
			0.83	6.68	1793.83	2692.17
34+00	2.68	3.03				
			0.82	1.03	1794.65	2693.20
34+08.78	2.36	2.05				
			17.07	6.09	1811.72	2699.30
34+50	19.09	4.47				
			25.13	8.73	1836.86	2708.03
34+75	32.24	10.96				
			26.18	7.83	1863.04	2715.86
35+00	21.33	2.83				
			25.68	5.39	1888.72	2721.25
35+50	5.72	1.80				
			4.80	2.96	1893.52	2724.21
35+84.26	1.84	1.90				
			0.74	1.85	1894.26	2726.06
36+00	0.69	3.17				
			15.16	15.36	1909.42	2741.42
36+50	15.69	10.10				
			14.49	14.40	1923.91	2755.81
36+86.16	5.95	7.10				
			6.54	3.45	1930.45	2759.26
37+00	21.16	3.77				
			23.10	5.70	1953.54	2764.97
37+41.23	10.53	2.26				
			2.45	0.89	1956.00	2765.86
37+50	4.58	2.12				
			5.19	3.17	1961.19	2769.03

STATION	AREAS Square Feet		VOLUMES Cubic Yards		CUMULATIVE VOLUMES Cubic Yards	
	CUT	FILL	CUT	FILL	CUT	FILL
37+81	4.46	2.30				
			4.07	1.65	1965.26	2770.68
38+00.53	6.80	1.36				
			7.71	4.32	1972.97	2775.00
38+50	1.61	2.42				
			0.98	4.93	1973.95	2779.93
38+80.88	0.14	4.46				
			0.34	5.40	1974.29	2785.34
39+00	0.81	7.75				
			0.81	8.64	1975.11	2793.97
39+18	1.63	12.99				
			2.04	13.77	1977.14	2807.75
39+50	1.81	5.61				
			2.28	40.37	1979.42	2848.12
40+00	0.66	29.27				
			0.78	35.88	1980.21	2884.01
40+20.72	1.39	45.55				
			1.19	73.04	1981.40	2957.05
40+50	0.98	45.85				
			3.47	139.96	1984.87	3097.01
40+90.99	3.85	78.32				
			1.02	27.95	1985.88	3124.95
41+00	2.25	55.65				
			2.70	69.49	1988.58	3194.44
41+50	0.66	4.39				
			0.36	1.81	1988.94	3196.25
41+60.18	1.23	3.28				
			2.85	6.10	1991.79	3202.35
42+01.17	2.57	3.10				
			2.54	14.36	1994.33	3216.70
42+50	0.23	9.60				
			0.07	6.45	1994.39	3223.16
42+63.11	0.04	11.66				
			2.01	16.57	1996.40	3239.72
43+00	2.78	8.15				
			3.11	28.37	1999.51	3268.09
43+50	0.53	16.93				
			0.52	14.95	2000.03	3283.04
43+67	1.15	22.01				
			10.13	20.75	2010.17	3303.79
43+96.64	16.71	8.51				
			2.47	1.23	2012.64	3305.02
44+00	22.98	7.26				
			55.41	17.78	2068.04	3322.79
44+50	36.85	8.10				
			69.35	20.01	2137.39	3342.80
45+00	38.04	9.19				
			13.25	3.45	2150.64	3346.26
45+11.11	26.38	4.23				
			20.87	9.74	2171.52	3356.00
45+53.84	1.61	5.53				
			1.66	13.67	2173.17	3369.67
46+00	0.33	7.26				
			0.39	2.58	2173.56	3372.25
46+08.74	2.05	5.49				
			11.32	25.05	2184.87	3397.30
46+50	12.64	22.45				
			31.01	44.27	2215.88	3441.57
47+00	20.43	19.08				
			32.60	15.75	2248.48	3457.33
47+30.32	36.43	5.40				
			24.65	3.53	2273.13	3460.85
47+50	31.19	2.33				
			21.28	2.23	2294.40	3463.09
47+73.02	18.73	1.86				
			11.85	4.99	2306.25	3468.07
48+00	5.71	5.81				
			5.80	10.31	2312.06	3478.38
48+25	7.33	11.38				
			4.62	11.69	2316.67	3490.08
48+50	3.11	8.16				
			2.92	61.54	2319.59	3551.61
48+87	1.36	60.31				
			0.64	47.68	2320.23	3599.29
49+00	1.43	88.06				
			2.55	242.12	2322.77	3841.42
49+50	1.47	108.88				
			1.04	88.93	2323.82	3930.35
49+69.19	1.63	82.96				
			1.21	118.87	2325.03	4049.22
50+00	0.50	83.71				
			2.31	201.43	2327.34	4250.65
50+50	1.99	90.32				
			87.40	120.90	2414.74	4371.55
50+85	132.85	58.91				
			59.32	35.10	2474.06	4406.65
51+00	80.69	42.19				
			95.13	109.67	2569.18	4516.32
51+50	22.05	52.57				
			66.01	60.84	2635.19	4577.17
52+00	49.24	0.00				
			132.21	0.00	2767.41	4577.17
52+50	93.55	0.00				
			228.39	0.00	2995.80	4577.17
53+00	153.11	0.00				
			207.21	0.00	3203.00	4577.17
53+50	70.67	0.00				
			67.66	23.31	3270.66	4600.47
53+89	23.01	25.82				
			8.91	11.61	3279.58	4612.08
54+01.10	16.77	15.63				
			16.47	21.62	3296.04	4633.70
54+50	1.22	3.82				
			1.22	5.13	3297.26	4638.83
54+84.19	0.72	2.65				
			0.56	1.92	3297.81	4640.75
55+00	1.18	2.61				
			15.19	17.36	3313.00	4658.11
55+50	15.22	12.38				
			17.09	10.69	3330.09	4668.80
55+84.44	11.57	1.02				
			7.29	0.63	3337.38	4669.43
56+00	14.79	0.79				
			12.95	2.14	3350.33	4671.57
56+42.35	2.11	1.42				
			0.39	0.62	3350.72	4672.19
56+50	0.61	2.07				
			0.62	5.57	3351.33	4677.75

NOTE: OVERALL PROJECT MASS HAUL
DIAGRAM REFLECTS A 25% SHRINK FACTOR

AG-0355-S-09-0004

No.	Revision	By	Date
1	50% SUBMITTAL	WBL	6/23/06
2	95% SUBMITTAL	WBL	8/31/06
3	CONST. PLANS	WBL	11/10/06

WARNING
0 1 2
IF THIS BAR DOES NOT MEASURE 1" THEN DRAWING IS NOT TO SCALE

● Project No. 04M551.103 ●

U.S.D.A. FOREST SERVICE – REGION 1
BEARTOOTH RANGER DISTRICT – CUSTER NATIONAL FOREST
RECONSTRUCTION OF WEST FORK ROCK CREEK ROAD #2071
PHASE III
EARTHWORK QUANTITY TABLE

GREAT WEST ENGINEERING
2030 11th. AVENUE
HELENA, MT 59601
(406) 449-8627, FAX (406) 449-8631

GreatWest engineering

Sheet No.
D–8

STATION	AREAS Square Feet CUT	FILL	VOLUMES Cubic Yards CUT	FILL	CUMULATIVE VOLUMES Cubic Yards CUT	FILL
56+89.85	0.23	3.97	0.19	1.62	3351.52	4679.37
57+00	0.76	2.79	4.29	15.84	3355.82	4695.21
57+50	3.74	9.57	27.73	17.98	3383.55	4713.19
58+00	21.48	5.29	13.46	8.97	3397.01	4722.16
58+23.47	4.42	11.91	1.05	10.38	3398.06	4732.54
58+36	0.13	23.88	0.46	19.23	3398.52	4751.77
58+50	1.66	35.47	1.22	13.89	3399.74	4765.66
58+58.68	5.91	33.66	5.48	101.40	3405.23	4867.06
59+00	1.25	55.15	0.96	122.60	3406.19	4989.66
59+38.80	0.14	59.10	0.03	25.36	3406.22	5015.03
59+50	0.00	38.74	1.86	62.83	3408.08	5077.86
60+00	2.01	15.55	4.34	36.11	3412.42	5113.97
60+50	2.68	15.65	2.59	28.34	3415.02	5142.31
60+91	0.73	14.22	0.78	12.21	3415.80	5154.51
61+03.14	2.75	29.22	66.77	31.19	3482.57	5185.71
61+50	73.08	0.00	341.72	0.00	3824.29	5185.71
62+00	287.29	0.00	94.26	0.00	3918.55	5185.71
62+08.34	307.11	0.00	565.77	0.00	4484.31	5185.71
62+50	426.20	0.00	800.45	0.00	5284.76	5185.71
63+00	438.29	0.00	86.37	0.00	5371.13	5185.71
63+05.41	423.36	0.00	598.32	0.00	5969.46	5185.71
63+50	293.15	0.00	409.44	0.00	6378.89	5185.71
64+00	148.69	0.00	162.79	0.00	6541.68	5185.71
64+50	28.03	0.00	9.83	0.00	6551.51	5185.71
64+64.62	8.45	0.00	5.60	15.55	6557.11	5201.26
65+00	0.09	18.99	0.03	17.20	6557.14	5218.46
65+14.98	0.00	30.62	0.00	72.96	6557.14	5291.43
65+50	0.00	59.46	0.00	186.44	6557.14	5477.86
66+00	0.00	101.52	0.00	255.30	6557.14	5733.16
66+50	0.00	118.51	0.00	17.69	6557.14	5750.85
66+53.19	0.00	120.26	0.00	263.49	6557.14	6014.34
67+00	0.00	122.91	0.00	160.24	6557.14	6174.58
67+25.89	0.00	144.45	0.00	162.76	6557.14	6337.33
67+50	0.00	144.03	0.00	155.48	6557.14	6492.81
67+75	0.00	123.54	0.00	139.76	6557.14	6632.58
68+00	0.00	118.77	0.00	230.68	6557.14	6863.26
68+50	0.00	81.65	0.30	155.78	6557.44	7019.04
69+00	0.32	53.94	1.31	118.45	6558.75	7137.49
69+50	1.00	48.76	1.38	66.16	6560.13	7203.66
69+81.43	1.20	42.29	0.49	34.97	6560.62	7238.62
70+00	0.23	39.04	0.33	75.53	6560.95	7314.16
70+50	0.12	26.22	0.42	58.53	6561.37	7372.69
71+00	0.33	24.35	0.61	59.99	6561.98	7432.68
71+50	0.33	27.48	0.85	70.21	6562.83	7502.89
72+00	0.59	33.18	0.27	29.55	6563.11	7532.44
72+16.65	0.30	43.50	0.20	53.70	6563.30	7586.14
72+50	0.01	28.28	17.72	36.49	6581.02	7622.63
73+00	18.44	4.24	21.50	8.31	6602.52	7630.94
73+50	3.19	3.23	2.82	3.61	6605.33	7634.56
73+80.07	1.62	2.10	1.22	2.53	6606.55	7637.08
74+00	1.68	3.39	4.51	7.25	6611.06	7644.33
74+50	3.19	2.87	5.42	11.24	6616.48	7655.57
75+00	2.66	6.84	8.36	21.28	6624.84	7676.85
75+50	6.37	11.55	2.73	8.12	6627.57	7684.97
75+64.22	4.00	13.11	3.78	13.75	6631.35	7698.72
75+86	4.85	14.15	6.23	8.18	6637.58	7706.90
76+00	17.42	11.48	24.69	15.70	6662.27	7722.61
76+50	7.44	2.05	4.92	2.02	6667.20	7724.63
76+70.87	4.69	2.02	5.73	2.91	6672.93	7727.54

STATION	AREAS Square Feet CUT	FILL	VOLUMES Cubic Yards CUT	FILL	CUMULATIVE VOLUMES Cubic Yards CUT	FILL
77+00	5.94	2.30	12.79	6.21	6685.72	7733.75
77+50	7.87	3.06	11.35	13.71	6697.08	7747.46
78+00	4.39	8.78	7.16	9.98	6704.23	7757.44
78+28.84	9.02	6.17	5.96	6.54	6710.19	7763.98
78+50	6.23	7.40	18.99	17.07	6729.19	7781.05
79+00	13.49	7.44	39.45	15.62	6768.64	7796.67
79+50	26.44	6.17	32.58	9.76	6801.22	7806.44
80+00	6.98	2.51	4.31	1.91	6805.52	7808.34
80+17.06	6.03	2.53	6.06	4.71	6811.58	7813.06
80+50	3.90	3.66	2.27	3.73	6813.85	7816.79
80+71.35	1.84	3.89	1.29	6.12	6815.15	7822.91
81+00	0.55	5.49	2.98	10.17	6818.13	7833.09
81+50	2.61	3.45	2.26	2.72	6820.39	7835.81
81+65.12	5.31	4.45	6.85	6.27	6827.24	7842.08
82+00	5.30	3.32	6.53	8.75	6833.77	7850.83
82+50	1.75	4.24	2.34	9.85	6836.11	7860.68
83+00	0.78	4.27	0.99	8.01	6837.10	7868.69
83+50	0.29	2.65	0.01	0.14	6837.11	7868.83
83+51.14	0.28	2.61	11.74	9.83	6848.85	7878.65
84+00	13.71	6.11	28.74	8.81	6877.59	7887.46
84+50	20.68	1.57	27.26	6.47	6904.84	7893.93
85+06.31	6.83	3.54	10.53	25.76	6915.37	7919.68
85+50	6.18	21.93	2.29	10.15	6917.66	7929.84
85+70	0.00	0.00	8.69	0.00	6926.35	7929.84
86+00	15.63	0.00	16.85	21.76	6943.20	7951.60
86+50	2.56	18.80	4.78	53.31	6947.97	8004.91
86+89.35	3.99	39.72	1.88	18.63	6949.86	8023.54
87+00	5.09	38.38	20.76	62.49	6970.61	8086.03
87+50	16.01	16.56	47.19	19.14	7017.80	8105.17
88+00	32.94	0.00	48.56	7.52	7066.36	8112.69
88+50	17.40	6.46	8.34	4.52	7074.70	8117.21
88+63.06	14.71	8.33	15.70	10.17	7090.40	8127.38
89+00	8.24	3.55	3.42	2.21	7093.82	8129.59
89+13.07	5.92	3.76	8.26	7.29	7102.08	8136.88
89+50	5.81	4.89	28.47	8.50	7130.55	8145.38
90+00	23.23	2.56	20.91	2.35	7151.46	8147.72
90+18.91	33.19	2.94	52.76	3.75	7204.22	8151.48
90+50	58.44	2.27	66.01	3.32	7270.23	8154.80
90+84.54	44.76	1.88	19.92	1.50	7290.15	8156.30
91+00	25.90	2.26	35.74	7.33	7325.89	8163.64
91+53.64	10.66	3.56	9.25	8.14	7335.14	8171.78
92+00	0.11	4.03	0.35	11.80	7335.49	8183.58
92+19	0.89	22.80	0.65	22.92	7336.14	8206.49
92+50	0.24	9.13	3.50	7.49	7339.64	8213.98
92+81.70	5.73	1.07	3.41	0.67	7343.05	8214.64
93+00	4.33	0.51	8.80	1.61	7351.85	8216.25
93+50	5.17	0.88	9.60	1.76	7361.45	8218.02
94+00	5.20	0.64	9.60	1.52	7371.05	8219.53
94+56.27	4.00	0.53	10.55	2.30	7381.60	8221.83
95+00	9.02	1.75	16.24	3.95	7397.84	8225.78
95+50	8.52	1.66	5.44	3.40	7403.28	8229.18
95+80	1.28	3.23	1.80	4.01	7405.09	8233.19
96+00	3.59	5.43	15.22	21.11	7420.31	8254.29
96+50	12.85	12.80	12.18	29.56	7432.49	8283.85
96+89.42	3.84	19.59	1.09	9.72	7433.58	8293.57
97+00	1.42	22.66	3.59	36.91	7437.16	8330.48
97+50	2.30	11.75	7.95	20.16	7445.11	8350.64
98+00	6.05	6.53	9.33	4.63	7454.44	8355.27
98+20.47	17.92	3.46	14.29	7.83	7468.73	8363.10

STATION	AREAS Square Feet CUT	FILL	VOLUMES Cubic Yards CUT	FILL	CUMULATIVE VOLUMES Cubic Yards CUT	FILL
98+50	8.21	8.00	49.58	35.42	7518.30	8398.53
99+00	45.34	22.60	11.75	7.20	7530.06	8405.72
99+06.85	47.37	22.82	104.08	27.27	7634.13	8432.99
99+50	73.13	5.34	42.98	4.19	7677.11	8437.18
99+64.70	73.46	7.39	60.35	14.64	7737.46	8451.83
100+00	18.87	10.53	17.54	12.19	7755.00	8464.01
100+50	0.08	0.00	0.08	0.00	7755.09	8464.01
100+70	0.14	0.00	8.60	22.09	7763.69	8486.10
101+00	15.34	31.81	1.81	4.56	7765.50	8490.66
101+03.17	15.51	30.42	24.39	43.59	7789.89	8534.25
101+50	12.81	10.17	23.87	13.87	7813.76	8548.13
102+00	13.20	2.12	23.83	2.42	7837.59	8550.54
102+50	12.55	0.00	8.98	0.54	7846.57	8551.08
102+73.14	8.19	1.01	5.97	2.41	7852.54	8553.49
103+00	3.81	2.86	4.35	8.93	7856.88	8562.42
103+50	0.88	4.85	0.67	4.01	7857.56	8566.43
103+76.67	0.48	1.64	1.74	1.69	7859.30	8568.12
104+00	3.49	1.53	10.35	4.54	7869.65	8572.66
104+50	7.24	2.60	32.60	14.48	7902.25	8587.15
105+00	26.11	10.54	46.37	33.19	7948.61	8620.34
105+50	20.49	19.49	26.49	46.53	7975.11	8666.86
106+00	6.30	22.75	6.03	35.03	7981.14	8701.89
106+50	0.07	9.08	0.06	4.23	7981.20	8706.12
106+60.70	0.25	8.72	0.40	8.05	7981.60	8714.17
106+81	0.81	8.41	0.60	4.91	7982.20	8719.08
107+00	0.90	2.74	0.97	3.29	7983.17	8722.37
107+27.99	0.97	2.34	1.76	2.92	7984.93	8725.28
107+50	3.22	3.57	6.84	5.10	7991.77	8730.39
108+00	3.89	0.97	6.42	1.33	7998.19	8731.72
108+50.64	2.59	0.18	4.93	0.43	8003.12	8732.15
109+00	2.80	0.19	2.74	0.19	8005.87	8732.34
109+26.04	2.89	0.12	2.52	0.29	8008.39	8732.62
109+50	2.82	0.40	4.65	1.29	8013.04	8733.91
110+00	2.22	0.70	4.14	2.79	8017.18	8736.70
110+50	2.27	1.70	4.46	4.17	8021.64	8740.87
111+00	2.56	1.89	3.71	2.79	8025.35	8743.65
111+50	1.45	0.51	5.86	6.71	8031.21	8750.37
112+00	4.85	5.31	5.69	20.36	8036.89	8770.72
112+41	2.58	16.17	1.45	4.78	8038.34	8775.51
112+50	6.03	6.70	10.95	9.53	8049.30	8785.03
112+83.72	11.27	5.44	6.33	3.72	8055.62	8788.75
113+00	9.72	4.42	10.33	9.06	8065.95	8797.80
113+50	1.44	3.41	2.80	12.77	8068.75	8810.58
114+00	1.58	7.62	1.91	13.14	8070.67	8823.71
114+50	0.48	3.72	1.66	6.67	8072.32	8830.38
115+00	1.31	2.04	1.64	4.10	8073.96	8834.47
115+50	0.46	1.50	0.25	0.90	8074.21	8835.38
115+62.76	0.61	1.56	2.50	3.95	8076.71	8839.33
116+00	2.98	3.19	6.09	15.46	8082.79	8854.79
116+50	3.62	10.13	4.80	12.83	8087.59	8867.62
117+00	1.47	0.78	1.31	0.41	8088.91	8868.03
117+18.68	2.16	0.18	2.16	0.63	8091.07	8868.66
117+50	1.56	0.69	3.00	1.42	8094.06	8870.08
118+00	1.68	0.54	2.78	2.77	8096.84	8872.84
118+50	1.32	1.85	3.76	3.80	8100.60	8876.64
119+00	2.74	1.43	1.32	1.00	8101.92	8877.64
119+13.65	2.48	1.74	19.23	3.54	8121.15	8881.18
119+50	24.71	2.52	46.43	7.68	8167.58	8888.86
120+00	21.45	4.11	16.01	5.50	8183.59	8894.36

NOTE: OVERALL PROJECT MASS HAUL DIAGRAM REFLECTS A 25% SHRINK FACTOR

AG-0355-S-09-0004

No.	Revision	By	Date
1	50% SUBMITTAL	WBL	6/23/06
2	95% SUBMITTAL	WBL	8/31/06
3	CONST. PLANS	WBL	11/10/06

WARNING
0 ? 1
IF THIS BAR DOES NOT MEASURE 1" THEN DRAWING IS NOT TO SCALE

● Project No. 04M551.103 ●

U.S.D.A. FOREST SERVICE – REGION 1
BEARTOOTH RANGER DISTRICT – CUSTER NATIONAL FOREST
RECONSTRUCTION OF WEST FORK ROCK CREEK ROAD #2071
PHASE III
EARTHWORK QUANTITY TABLE

GREAT WEST ENGINEERING
2030 11th. AVENUE
HELENA, MT 59601
(406) 449-8627, FAX (406) 449-8631

Sheet No.
D–9

STATION	AREAS Square Feet		VOLUMES Cubic Yards		CUMULATIVE VOLUMES Cubic Yards	
	CUT	FILL	CUT	FILL	CUT	FILL
120+32.55	3.45	3.12	1.55	1.76	8185.14	8896.12
120+50	1.34	1.24	2.46	3.40	8187.60	8899.52
121+00	1.31	1.70	1.81	4.58	8189.41	8904.10
121+50	0.64	2.26	1.51	14.77	8190.92	8918.87
122+00	1.00	10.50	2.76	13.05	8193.68	8931.92
122+50	1.98	0.77	1.44	1.21	8195.12	8933.13
122+75.11	1.12	1.32	1.24	1.92	8196.37	8935.05
123+00	1.59	2.01	4.33	5.46	8200.69	8940.52
123+50	3.08	2.69	27.99	8.18	8228.68	8948.70
124+00	26.91	4.35	43.93	10.99	8272.61	8959.68
124+50	19.93	5.11	19.02	8.60	8291.63	8968.29
125+00	0.50	2.30	2.01	3.76	8293.64	8972.04
125+50	1.67	0.95	3.06	1.82	8296.70	8973.86
125+99.34	1.67	0.65	11.83	0.79	8308.53	8974.66
126+43.74	12.71	0.12	2.59	0.03	8311.12	8974.69
126+50	9.90	0.10	10.13	1.88	8321.25	8976.57
127+00	0.95	1.54	3.86	3.47	8325.11	8980.04
127+50	3.21	1.46	3.01	1.54	8328.13	8981.58
127+76.84	2.96	0.99	0.81	0.45	8328.93	8982.04
127+85	2.39	1.40	1.14	1.47	8330.07	8983.50
128+00	1.71	2.82	2.30	12.80	8332.37	8996.30
128+50	0.77	8.23	4.01	16.12	8336.39	9012.43
129+00	3.57	5.70	4.29	12.98	8340.68	9025.41
129+50	1.07	5.52	2.25	15.26	8342.93	9040.66
129+84	2.50	13.87	1.49	7.11	8344.42	9047.78
130+00	2.52	5.33	6.43	6.33	8350.85	9054.10
130+50	4.42	0.13	13.93	0.15	8364.79	9054.25
131+00	10.63	0.00	11.54	2.49	8376.33	9056.74
131+50	1.84	2.15	8.94	3.35	8385.27	9060.09
132+00	7.81	0.75	21.95	2.60	8407.23	9062.69
132+50	15.90	1.50	16.09	17.53	8423.32	9080.22
133+00	1.48	13.64	1.16	8.00	8424.47	9088.22
133+20.88	1.51	2.91	5.64	2.54	8430.12	9090.76
133+50	9.05	0.86	7.25	0.80	8437.37	9091.56
133+70.22	11.25	0.79	9.16	0.67	8446.53	9092.22
134+00	5.36	0.18	8.80	0.63	8455.33	9092.85
134+47.69	4.60	0.39	0.40	0.04	8455.73	9092.89
134+50	4.60	0.43	26.28	3.81	8482.01	9096.71
135+00	23.97	2.88	61.75	7.70	8543.76	9104.41
135+50	44.39	3.79	54.35	8.90	8598.11	9113.31
136+00	15.69	3.87	19.91	6.80	8618.02	9120.11
136+50	6.17	2.00	4.10	2.54	8622.13	9122.65
136+76.23	2.30	2.21	2.35	2.17	8624.48	9124.82
137+00	3.04	1.74	3.85	17.09	8628.33	9141.91
137+26	4.97	26.66	4.00	30.31	8632.33	9172.22
137+50	4.03	27.90	6.57	33.39	8638.90	9205.61
138+00	3.06	0.95	8.52	6.21	8647.42	9211.82
138+50	6.14	4.41	2.81	2.35	8650.23	9214.17
138+65.25	3.81	2.26	9.19	3.29	8659.43	9217.46
139+00	10.06	1.92	19.34	4.98	8678.76	9222.44
139+50	10.30	2.50	17.51	4.39	8696.27	9226.83
140+00	8.48	1.40	5.93	1.58	8702.20	9228.41
140+28.33	2.69	1.08	1.32	1.41	8703.52	9229.82
140+50	0.61	1.73	0.33	2.01	8703.85	9231.82
140+70.51	0.25	2.49	1.04	11.74	8704.89	9243.56
140+93	2.13	21.05	0.61	6.72	8705.50	9250.28
141+00	2.36	23.11	39.15	26.79	8744.65	9277.08
141+50	37.31	0.35	17.12	0.12	8761.77	9277.20
141+61.68	35.69	0.08	23.97	0.07	8785.73	9277.27

STATION	AREAS Square Feet		VOLUMES Cubic Yards		CUMULATIVE VOLUMES Cubic Yards	
	CUT	FILL	CUT	FILL	CUT	FILL
141+81	31.29	0.08	19.66	0.37	8805.39	9277.63
142+00	24.58	0.75	29.56	3.37	8834.95	9281.00
142+50	7.34	2.16	11.44	5.89	8846.39	9286.89
143+00	5.02	2.93	11.48	6.47	8857.87	9293.36
143+50	7.38	2.66	17.52	5.98	8875.39	9299.34
144+00	11.54	2.51	13.02	5.15	8888.41	9304.49
144+50	2.52	1.94	5.06	3.80	8893.47	9308.29
145+00	2.95	1.34	3.78	1.06	8897.25	9309.36
145+27.09	4.58	0.36	4.68	0.28	8901.94	9309.64
145+50	6.51	0.17	12.54	0.24	8914.47	9309.88
146+00	7.08	0.04	8.32	14.71	8922.79	9324.59
146+50	1.85	12.99	1.45	19.83	8924.24	9344.42
146+68	2.44	37.01	3.58	23.67	8927.83	9368.09
146+96.23	4.39	1.00	6.49	1.42	8934.31	9369.51
147+50	2.13	0.14	3.47	1.24	8937.79	9370.75
148+00	1.62	0.93	3.40	3.64	8941.19	9374.39
148+50	2.05	2.22	2.60	6.75	8943.78	9381.14
149+00	0.76	3.61	2.43	4.78	8946.21	9385.93
149+50	1.87	0.52	6.29	0.64	8952.50	9386.57
150+00	4.93	0.04	7.34	3.76	8959.84	9390.32
150+50	3.00	3.21	5.63	8.94	8965.47	9399.27
151+00	3.08	4.52	4.14	8.09	8969.61	9407.36
151+50	1.39	2.47	2.72	4.91	8972.33	9412.27
152+00	1.55	1.77	6.62	5.92	8978.95	9418.19
152+50	5.60	3.34	26.51	6.33	9005.46	9424.52
153+00	23.04	2.12	13.85	1.31	9019.31	9425.83
153+12.83	35.24	2.28	64.56	5.64	9083.87	9431.47
153+50	52.47	4.14	77.47	9.57	9161.34	9441.04
154+00	24.95	3.91	24.69	18.89	9186.03	9459.93
154+50	0.43	12.56	6.93	8.80	9192.96	9468.74
154+75.28	13.88	2.65	14.28	2.87	9207.24	9471.61
155+00	17.32	2.37	28.12	6.20	9235.36	9477.81
155+50	13.04	2.99	23.19	5.56	9258.55	9483.37
156+00	12.00	1.81	11.61	1.52	9270.15	9484.89
156+27.37	10.90	0.59	6.33	1.86	9276.48	9486.75
156+50	4.13	3.02	6.42	22.94	9282.90	9509.69
157+00	2.83	16.98	18.17	64.78	9301.08	9574.47
157+50	17.28	38.55	25.32	105.98	9326.40	9680.45
158+00	10.93	51.39	14.85	87.54	9341.24	9767.99
158+50	5.66	23.60	2.27	21.33	9343.51	9789.31
158+72	0.00	18.47	3.38	16.45	9346.89	9805.76
159+00	6.61	7.10	5.78	3.47	9352.67	9809.23
159+14.12	16.19	3.63	14.86	12.48	9367.52	9821.71
159+50	6.17	11.40	5.71	53.95	9373.24	9875.66
160+00	0.00	35.22	0.00	79.27	9373.24	9954.93
160+50	0.00	33.27	0.42	77.97	9373.66	10032.91
161+00	0.45	34.10	0.42	166.81	9374.08	10199.72
161+50	0.00	110.03	0.00	334.09	9374.08	10533.80
162+00	0.00	178.63	0.00	338.59	9374.08	10872.39
162+50	0.00	113.92	1.16	112.65	9375.24	10985.04
162+75.49	2.47	76.99	17.21	46.61	9392.45	11031.65
163+00	35.06	5.78	102.62	5.51	9495.08	11037.16
163+41.34	97.84	0.00	32.43	0.00	9527.50	11037.16
163+50	104.36	0.00	175.92	0.00	9703.43	11037.16
164+00	85.64	0.00	208.80	0.00	9912.23	11037.16
164+50	139.87	0.00	247.26	0.00	10159.49	11037.16
165+00	127.17	0.00	222.03	0.00	10381.52	11037.16
165+50	112.63	0.00	216.60	0.00	10598.12	11037.16
166+00	121.31	0.00	222.68	0.00	10820.81	11037.16

STATION	AREAS Square Feet		VOLUMES Cubic Yards		CUMULATIVE VOLUMES Cubic Yards	
	CUT	FILL	CUT	FILL	CUT	FILL
166+50	119.19	0.00	207.47	0.00	11028.27	11037.16
167+00	104.88	0.00	124.57	2.68	11152.85	11039.84
167+34.76	88.64	3.34	48.69	7.67	11201.54	11047.51
167+50	84.58	18.16	78.14	96.84	11279.68	11144.34
168+00	0.00	64.83	0.63	106.22	11280.31	11250.56
168+49.67	0.69	27.04	0.01	0.41	11280.32	11250.98
168+50	0.74	26.47	0.68	30.64	11281.00	11281.62
169+00	0.00	0.00	6.45	72.17	11287.46	11353.79
169+47.74	7.30	65.30	12.68	153.18	11300.13	11506.97
[illegible]	[illegible]	[illegible]	14.74	65.47	11314.88	11572.44
170+50	9.66	1.67	4.98	1.42	11319.86	11573.86
170+68.31	4.76	1.56	4.20	2.34	11324.06	11576.20
171+00	2.40	1.63	4.04	4.87	11328.10	11581.08
171+50	1.96	2.58	5.27	3.90	11333.37	11584.97
172+00	3.74	0.79	8.88	1.40	11342.25	11586.37
172+47.46	6.36	0.48	13.70	1.46	11355.95	11587.83
173+00	7.60	0.72	24.37	2.78	11380.32	11590.61
173+50	18.36	1.67	25.09	2.93	11405.42	11593.54
174+00	8.42	0.84	13.20	1.60	11418.62	11595.15
174+50	5.76	0.54	7.02	3.59	11425.64	11598.74
175+00	1.84	2.56	1.15	1.37	11426.79	11600.11
175+10	4.39	3.32	7.71	5.72	11434.49	11605.83
175+50	6.05	2.81	37.29	5.26	11471.79	11611.09
176+00	34.06	1.71	37.01	7.94	11508.80	11619.03
176+50	5.61	5.10	26.23	6.47	11535.03	11625.51
177+00	22.61	0.43	26.66	0.70	11561.69	11626.21
177+50	6.14	0.18	12.41	1.82	11574.09	11628.03
178+00	7.30	1.79	13.85	7.35	11587.95	11635.38
178+50	7.74	4.9[illegible]	7.89	7.15	11595.84	11642.53
178+84.76	4.60	3.91	2.39	2.16	11598.23	11644.69
179+00	3.87	2.22	10.85	2.66	11609.08	11647.35
179+50	7.85	0.08	13.32	0.35	11622.40	11647.70
180+00	6.53	0.23	16.26	2.64	11638.66	11650.34
180+50	11.03	2.06	33.28	8.57	11671.94	11658.91
181+00	24.92	5.34	15.66	5.27	11687.60	11664.18
181+17.99	22.09	7.31	24.69	8.45	11712.29	11672.63
181+50	17.05	4.40	23.83	5.74	11736.12	11678.37
182+00	7.42	0.65	10.09	4.11	11746.20	11682.48
182+41.27	5.40	3.65	1.47	1.44	11747.67	11683.92
182+50	3.69	3.50	10.56	5.40	11758.23	11689.33
183+00	7.72	1.17	8.72	3.65	11766.95	11692.98
183+50	1.70	1.98	5.16	4.24	11772.11	11697.22
184+00	3.87	1.63	14.73	2.40	11786.84	11699.61
184+50	12.03	0.39	17.37	0.47	11804.21	11700.09
185+00	6.73	0.02	14.15	0.02	11818.36	11700.11
185+53.39	7.58	0.00	18.50	0.00	11836.86	11700.11
185+98.02	14.81	0.00	42.80	0.00	11879.66	11700.11
186+50	29.65	0.00	94.90	0.00	11974.56	11700.11
187+00	72.84	0.00	105.93	0.53	12080.49	11700.63
187+50	41.57	0.45	43.29	17.08	12123.78	11717.71
188+00	5.18	14.30	1.98	14.07	12125.76	11731.78
188+20	0.16	16.09	0.02	5.32	12125.78	11737.10
188+28	0.00	12.64	0.12	33.97	12125.91	11771.07
188+50	0.31	54.06	7.64	68.35	12133.55	11839.42
189+00	7.95	5.00	24.82	10.40	12158.37	11849.81
189+52.75	17.45	3.52	40.60	3.84	12198.97	11853.66
190+00	28.85	0.00	79.87	0.00	12278.84	11853.66
190+50	57.02	0.00	102.23	0.00	12381.07	11853.66
191+00	52.52	0.00	96.85	0.00	12477.92	11853.66

NOTE: OVERALL PROJECT MASS HAUL DIAGRAM REFLECTS A 25% SHRINK FACTOR

AG-0355-S-09-0004

GREAT WEST ENGINEERING
2030 11th. AVENUE
HELENA, MT 59601
(406) 449-8627, FAX (406) 449-8631

GreatWest engineering

● Project No. 04M551.103 ●

U.S.D.A. FOREST SERVICE – REGION 1
BEARTOOTH RANGER DISTRICT – CUSTER NATIONAL FOREST
RECONSTRUCTION OF WEST FORK ROCK CREEK ROAD #2071
PHASE III
EARTHWORK QUANTITY TABLE

WARNING
0 1
IF THIS BAR DOES NOT MEASURE 1" THEN DRAWING IS NOT TO SCALE

No.	Revision	By	Date
1	50% SUBMITTAL	WBL	6/23/06
2	95% SUBMITTAL	WBL	8/31/06
3	CONST. PLANS	WBL	11/10/06

Sheet No.
D–10