STATE	PROJECT	SHEET NUMBER
AK	PRA-DENA 10(18)	A.1

U. S. DEPARTMENT OF THE INTERIOR
NATIONAL PARK SERVICE
DENALI NATIONAL PARK

PLANS FOR PROPOSED PROJECT

AK PRA-DENA 10(18)
PMIS. PKG. NO. 90819A

PARK ROAD, 4 MILE SLUMP and 4.5 AUFEIS SECTION

DENALI BOROUGH
ALASKA
LENGTH 0.909 MILES

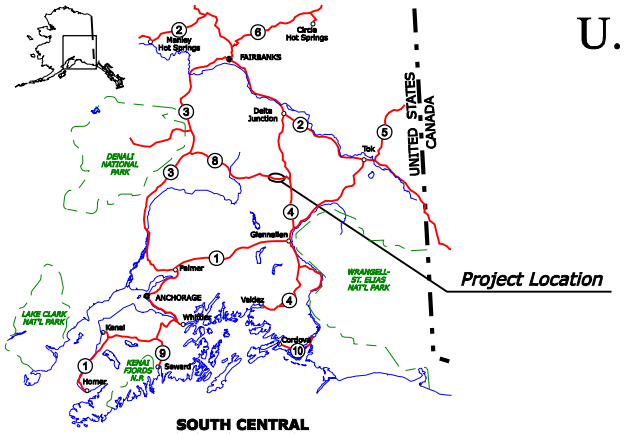

SOUTH CENTRAL
ALASKA KEY MAP

PRELIMINARY
NOT FOR CONSTRUCTION

INDEX TO SHEETS

A. GENERAL INFORMATION
A.1 TITLE SHEET
A.2 PLAN SYMBOLS AND ABBREVIATIONS
A.3 VICINITY MAP

B. SUMMARIES
B.1-2 SUMMARY OF QUANTITIES

C. TYPICAL SECTION(S)
C.1-2 TYPICAL SECTIONS

D. PLAN-PROFILE
D.1 TABULATION OF PLAN AND PROFILE QUANTITIES
D.2-3 PLAN AND PROFILE SHEETS
D.4 SILT FENCE - STD. 157-1

E. DRAINAGE
E.1 TABULATION OF DRAINAGE QUANTITIES
E.2-4 METAL CULVERT PIPE STANDARDS AND DRAWINGS
E.5 MISCELLANEOUS DRAINAGE DETAILS

F. TEMPORARY TRAFFIC CONTROL
F.1 TABULATION OF TEMPORARY TRAFFIC CONTROL QUANTITIES
F.2 TEMPORARY TRAFFIC CONTROL SINGLE LANE CLOSURE LAYOUT-STD. DRWG. 635-6
F.3 TEMPORARY TRAFFIC CONTROL SIGN INSTALLATION-STD. DRWG. 635-14

G. PERMANENT TRAFFIC CONTROL
G.1 PERMANENT MARKING DETAIL AND TABULATION OF QUANTITIES

TYPE OF CONSTRUCTION:

Grading, base, paving, and drainage

DESIGN DESIGNATION:

ADT 2007	*850*
ADT 2027	*1037*
V	*35 MPH*
e (max)	*0.060*

SPECIFICATION:

Standard Specifications for Construction of Roads and Bridges on Federal Highway Projects, FP-03 US Customary Units

FEDERAL LANDS HIGHWAY
COMMITMENT TO EXCELLENCE

PLANS PREPARED BY
U.S. DEPARTMENT OF TRANSPORTATION
FEDERAL HIGHWAY ADMINISTRATION
WESTERN FEDERAL LANDS HIGHWAY DIVISION
VANCOUVER, WASHINGTON

PROJECT LOCATION SEE SHEET A.3 FOR VICINITY MAP

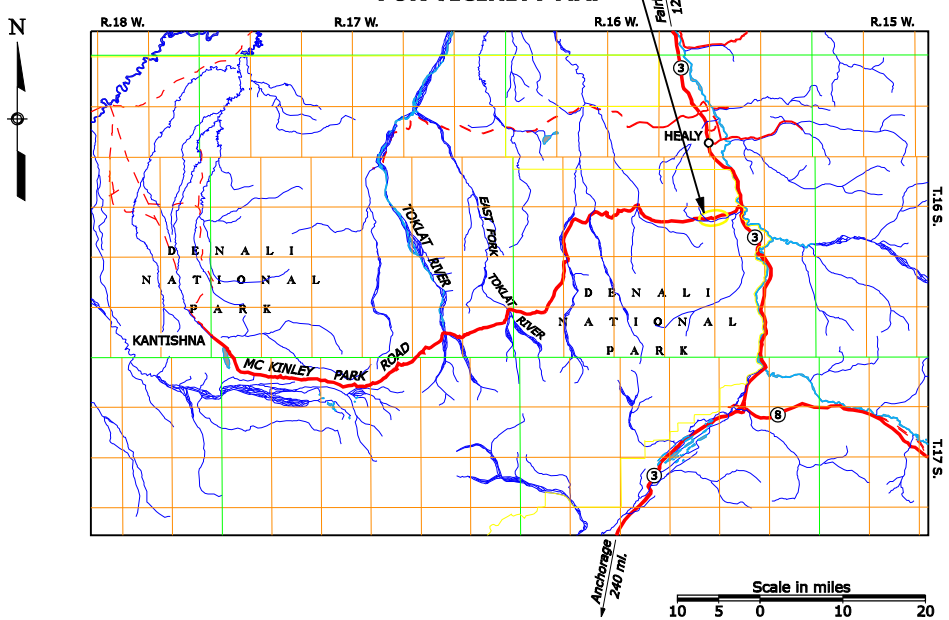

RECOMMENDED:

_____ DATE _____
Project Director,
Western Federal Lands Highway Division

_____ DATE _____
Regional Director, Alaska Region,
National Park Service

APPROVED:

_____ DATE _____
Superintendent,
Denali National Park and Preserve

NPS PMIS No. 90819A NPS Drwg. No. 184/80246

F:\NPS\DENA\dena1018\New Design (Jack)\Plan Sheets\da1018aa.dgn | _DATE_ + "_FILE_ | Designed by: Jack Doucey | Checked by: 6/2007 | K. Austin 6/2007

STATE	PROJECT	SHEET NUMBER
AK	PRA-DENA 10(18)	A.3

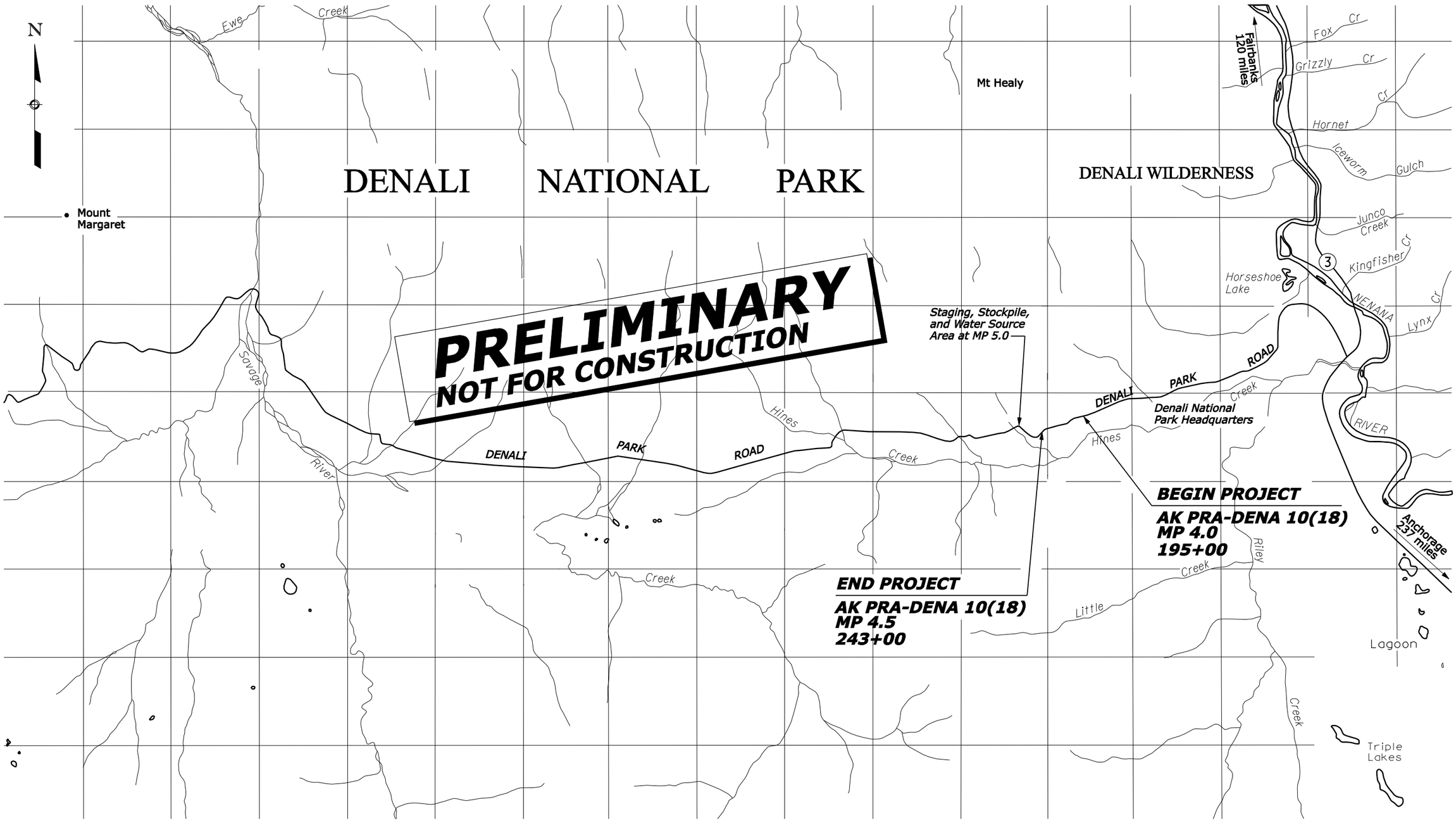

NPS PMIS No. 90819A NPS Drwg. No. 184/80246

Scale in miles

.5 .25 0 .5 1 1.5 2

VICINITY MAP

F:\NPS\DENA\dena1018\New Design (Jack)\Plan Sheets\de1018ac.dgn _DATE_ " + "_FILE_ Designed by: --/--- Checked by: --/---

STATE	PROJECT	SHEET NUMBER
AK	PRA-DENA 10(18)	C.1

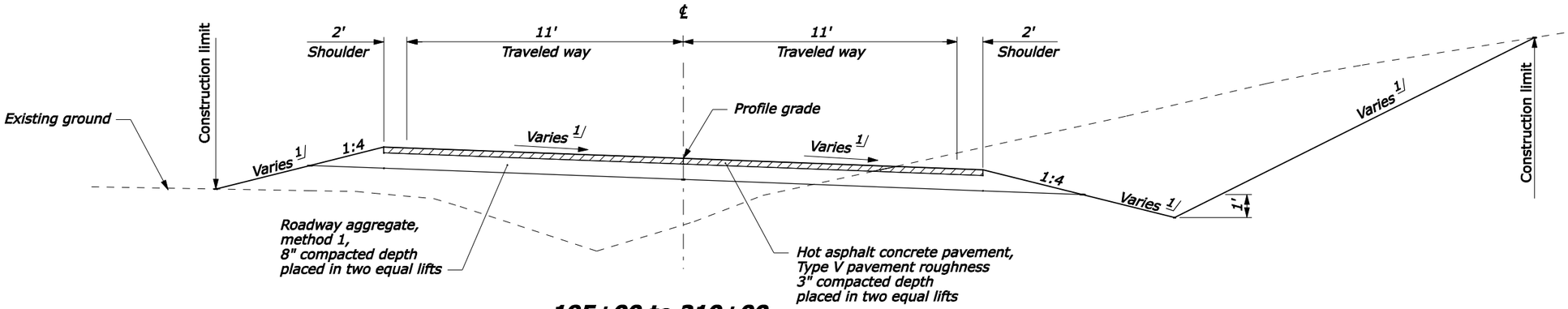

195+00 to 210+00
212+00 to 220+00
242+00 to 243+00

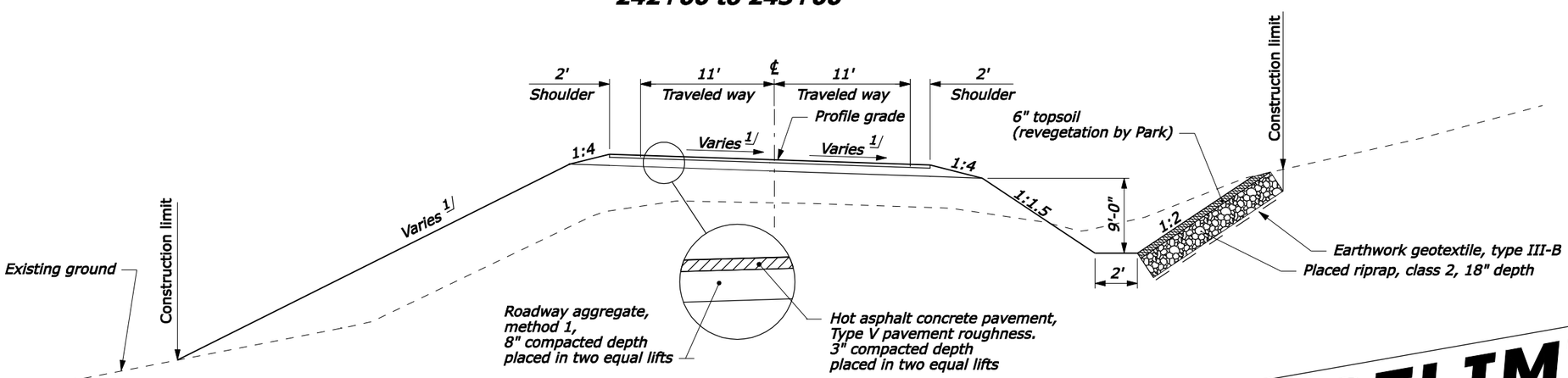

210+00 to 212+00
223+25 to 226+00
228+25 to 231+50
237+00 to 239+00

PRELIMINARY
NOT FOR CONSTRUCTION

PAVEMENT STRUCTURE QUANTITIES

ITEM	DESCRIPTION	QUANTITY	EST. VALUE
30802-1000	Roadway aggregate, method 1	7309 t	1.97 t/cu yd
40301-0000	Hot asphalt concrete pavement, Type V pavement roughness	2270 t	1.97 t/cu yd

Item 20701-1100
EARTHWORK GEOTEXTILE, TYPE III-B
(sqyd)

LOCATION	QUANTITY
210+00 to 212+00 RT	284
223+25 to 226+00 RT	853
228+25 to 231+50 RT	1127
237+00 to 239+00 RT	727
Total	2991

Item 25101-2000
PLACED RIPRAP, CLASS 2
(cuyd)

LOCATION	QUANTITY
210+00 to 212+00 RT	156
223+25 to 226+00 RT	455
228+25 to 231+50 RT	602
237+00 to 239+00 RT	423
Total	1636

Item 31101-0000
CONSERVE AND STOCKPILE TOPSOIL
(cuyd)

LOCATION	QUANTITY
204+00 to 205+00	202
207+33 to 213+00	1009
Total	1211

FOOTNOTE:

1/ Construct as shown in staking report data listing. (See FAR 52.236-4)

NPS PMIS No. 90819A NPS Drwg. No. 184\80246

Not to scale

TYPICAL SECTIONS

F:\NPS\DENA\dena1018\New Design (Jack)\Plan Sheets\de1018ca.dgn _DATE_ " + " _FILE_ Designed by: Jack Doucey 5/2007 Checked by: K. Austin 5/2007

STATE	PROJECT	SHEET NUMBER
AK	PRA-DENA 10(18)	C.2

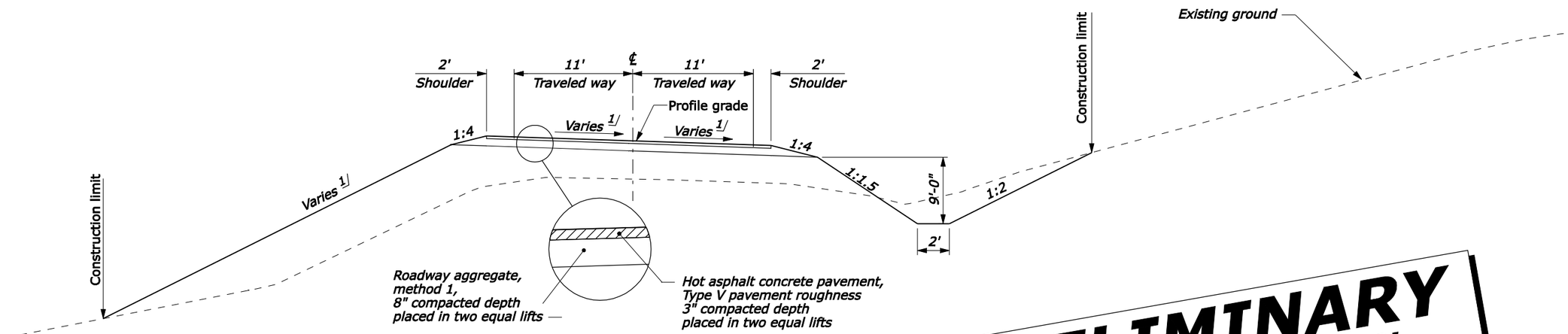

220+00 to 223+25
226+00 to 228+25
231+50 to 237+00
239+00 to 242+00

PRELIMINARY
NOT FOR CONSTRUCTION

FOOTNOTE:

1/ Construct as shown in staking report data listing. (See FAR 52.236-4)

NPS PMIS No. 90819A NPS Drwg. No. 184\80246

TYPICAL SECTIONS

Not to scale

F:\NPS\DENA\dena1018\New Design (Jack)\Plan Sheets\de1018ca.dgn _DATE_ " + " _FILE_ Designed by: Jack Doucey 5/2007 Checked by: K. Austin 6/2007

STATE	PROJECT	SHEET NUMBER
AK	PRA DENA 10(18)	D.2

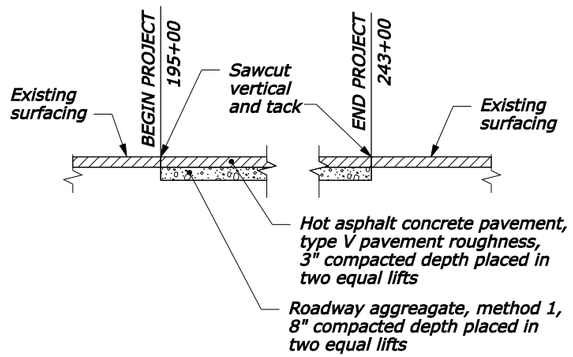

DENALI PARK ROAD

BEGINNING AND END OF PROJECT CONNECTION DETAIL

PRELIMINARY
NOT FOR CONSTRUCTION

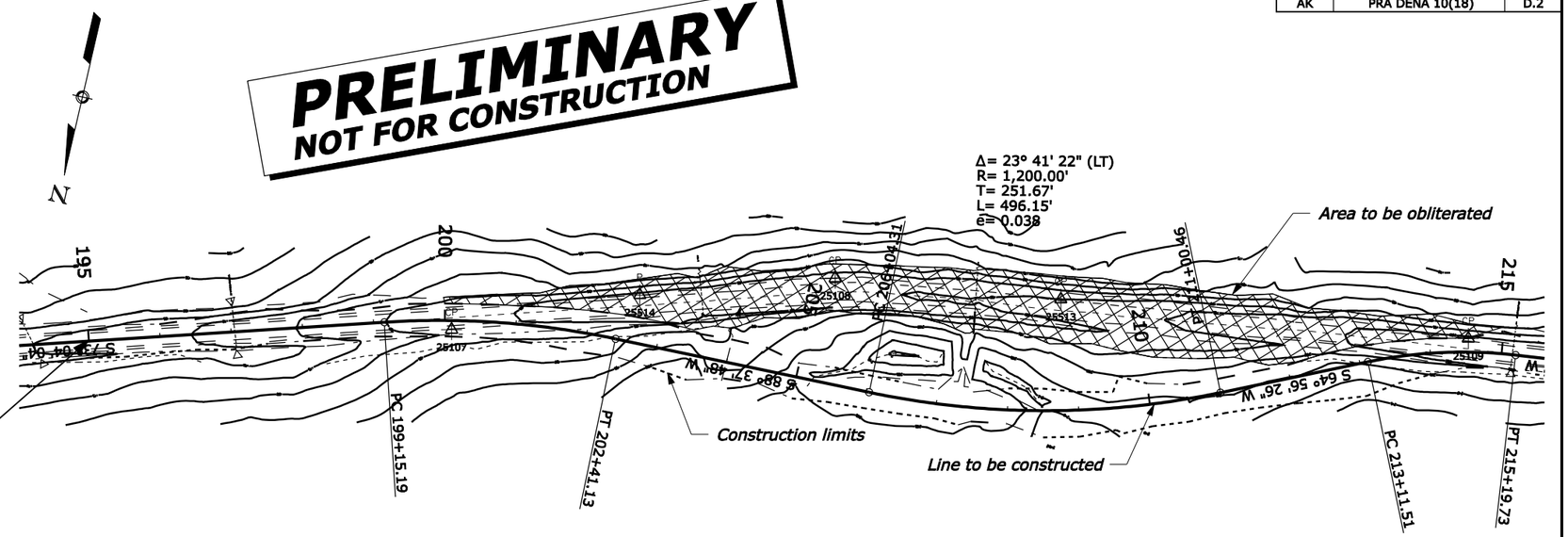

BEGIN PROJECT

AK PRA DENA 10(18)
195+00

N = 3563673.1575
E = 1158177.9022
EL = 166.26

CONTROL POINTS

NAME	NORTHING	EASTING	ELEVATION
25107	3563540.674	1157686.577	182.047
25514	3563433.136	1157440.905	186.419
25108	3563346.798	1157179.851	187.405
25513	3563303.385	1156865.154	189.562
25109	3563225.780	1156296.509	201.336

NPS PMIS No. 90819A NPS Drwg. 184\80246

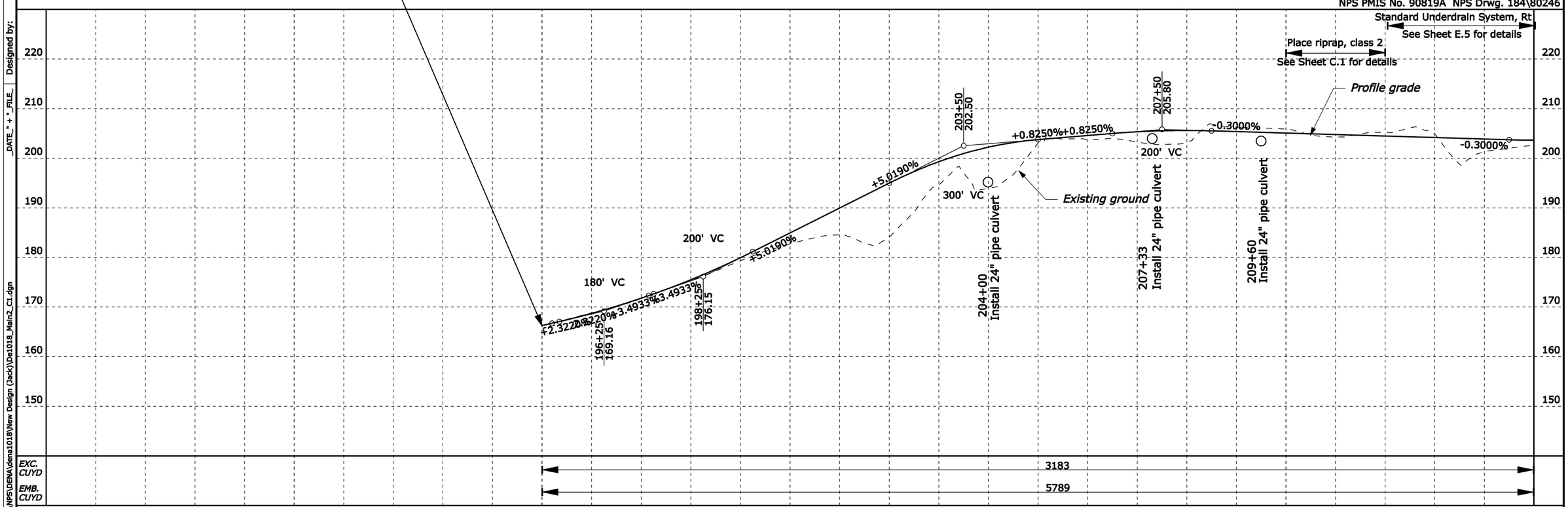

6/2007 | K. Austin | Checked by: | 04/2007 | Jack Doucey | Designed by: | _DATE_ " + " _FILE_ | F:\NPS\DENA\dena1018\New Design (Jack)\Da1018_Main2_C1.dgn

STATE	PROJECT	SHEET NUMBER
AK	PRA DENA 10(18)	D.3

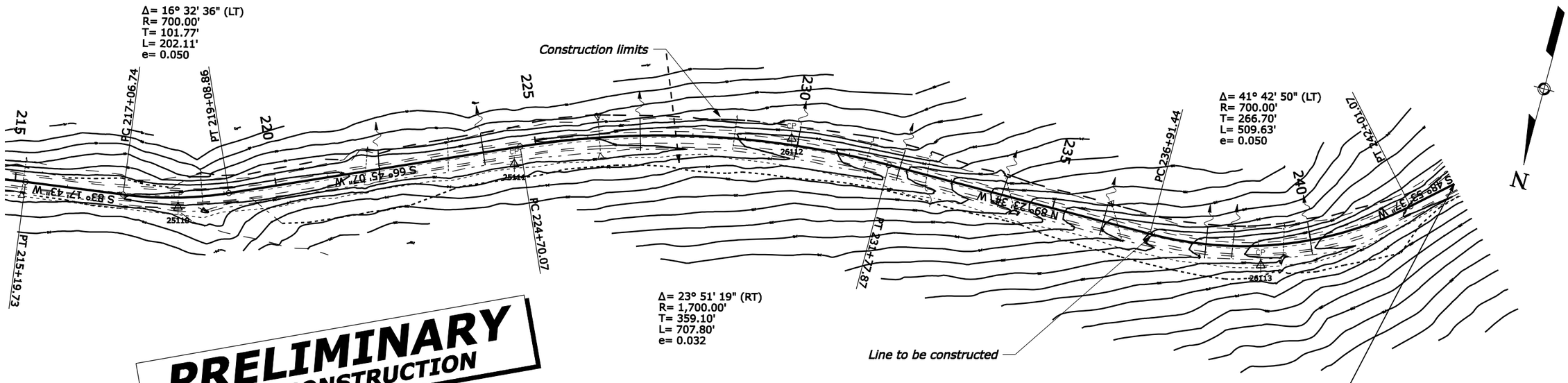

PRELIMINARY
NOT FOR CONSTRUCTION

CONTROL POINTS

NAME	NORTHING	EASTING	ELEVATION
25110	3563209.456	1155933.409	203.792
25111	3562973.110	1155333.216	204.009
26112	3562796.813	1154833.297	212.162
26113	3562811.363	1153909.242	261.493

END PROJECT

AK PRA DENA 10(18)
243+00

N = 3562567.6811
E = 1153585.9476
EL = 272.19

NPS PMIS No. 90819A
NPS Drwg. No. 184\80246

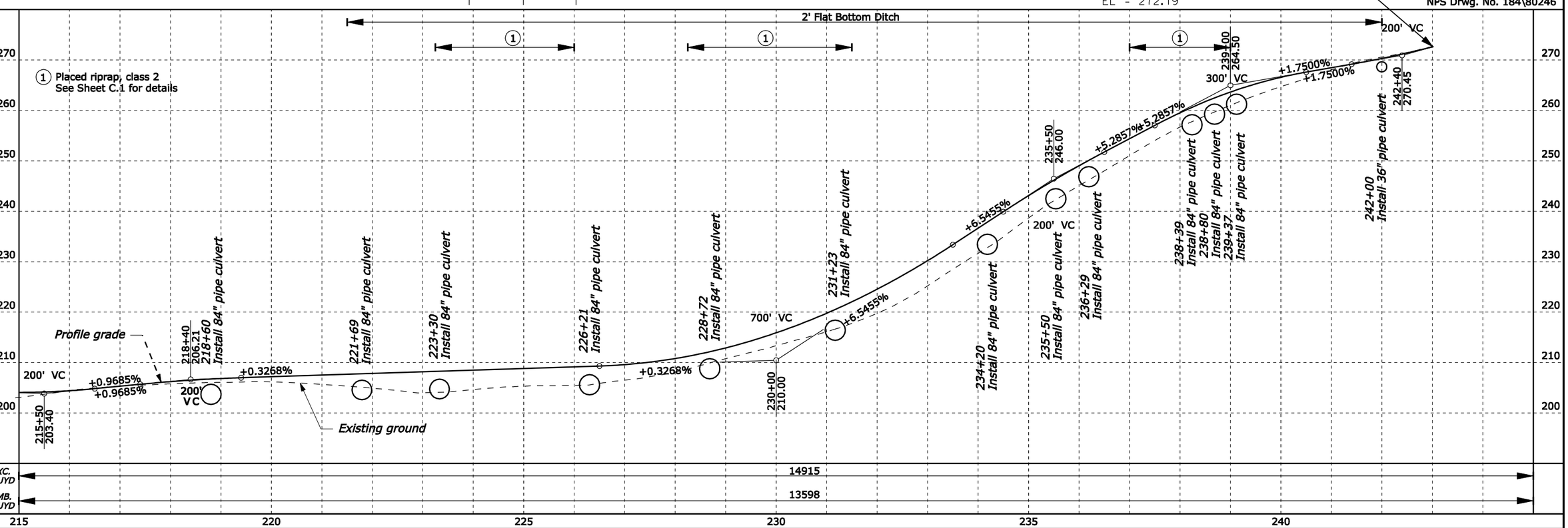

6/2007 | K. Austin | 04/2007 | Checked by: | Jack Doucey | Designed by: | _DATE_ " + "_FILE_ | F:\WPS\DENA\dena1018\New Design (Jack)\Det1018_Main2_C2.dgn

Note: The quantities shown hereon are approximate and are subject to field adjustments.

TABULATION OF DRAINAGE QUANTITIES

STATE	PROJECT	SHEET NUMBER
AK	AK PRA-DENA 10(18)	E.1

PAY ITEM NUMBER			20301			25101		60201																		
			-1200	-1400	-1900	-1000	-3000	-0800	-1000	-1800																
STATION	EST MAX COVER (ft)	STR EXC (CUYD)	Removal (Each)			Placed riprap, energy dissapator (CUYD)		Pipe Culvert (LNFT)																Allow. Pipe Material (See key below)	BEVELS 1V:nH		FOOTNOTES See below for numbered footnotes
			Head-wall	Inlet	Pipe Culverts	Class 1	Class 3																		Lt	Rt	
DIAMETER or SPAN x RISE (inch)								24	36	84																	
204+00	6.2	6						58																GS	1V:1.5H	1V:1.5H	
207+33	1.0	20						43																GS	1V:1.5H	1V:1.5H	
209+60	1.0	90						43																GS	1V:1.5H	1V:1.5H	
218+60	4.8	206								69														GS	1V:1.5H	1V:1.5H	
221+69	3.5	205								65														GS	1V:1.5H	1V:1.5H	
223+30	3.5	155								65														GS	1V:1.5H	1V:1.5H	
226+21	6.5	180								70														GS	1V:1.5H	1V:1.5H	
228+72	4.5	195								65														GS	1V:1.5H	1V:1.5H	
231+23	6.4	176								70														GS	1V:1.5H	1V:1.5H	
234+20	3.8	135								66														GS	1V:1.5H	1V:1.5H	
235+50	3.5	145								65														GS	1V:1.5H	1V:1.5H	
236+29	3.0	145								63														GS	1V:1.5H	1V:1.5H	
238+39	2.8	160					5			64														GS	1V:1.5H	1V:1.5H	
238+80	2.9	165					5			64														GS	1V:1.5H	1V:1.5H	
239+37	3.3	170					5			65														GS	1V:1.5H	1V:1.5H	
242+00	1.0	65							47															GS	1V:1.5H	1V:1.5H	
221+72					1																						
223+31					1																						
226+20					1																						
228+80					1																						
231+33					1																						
232+52					1																						
234+18					1																						
236+28					1																						
238+51					1																						
239+48					1																						
PROJECT TOTAL		**2218**	**0**		**10**		**15**	**144**	**47**	**791**	**0**	**0**	**0**	**0**	**0**	**0**	**0**	**0**	**0**		**0**	**0**					

PRELIMINARY
NOT FOR CONSTRUCTION

NOTE:

1. Steel pipe culvert minimum wall thickness is the larger of 0.064" or the thickness required by the Std. 602-1 fill height table.
2. Aluminized steel pipe culvert minimum wall thickness is the larger of 0.060" or the thickness required by the Std. 602-1 fill height table (steel).
3. Aluminum pipe culvert minimum wall thickness is the larger of 0.060" or the thickness required by the Std. 602-1 fill height table.
4. Plastic pipe is not allowed when final installation is exposed. Furnish metal end sections for all plastic pipe including those specified with bevels. See Std. 602-5 for acceptable cell class.
5. See Std. 602-7 for acceptable concrete cell class.

Allowable pipe culvert material

A	Aluminum
AS	Aluminized steel
C	Concrete
GS	Galvanized steel
P	Plastic
(blank)	Any appropriate material
X/__	Any appropriate material except __

NPS PMIS No. 90819A NPS Drwg. No. 0184\80246

6/2007 K. Austin Checked by: 6/2007 Jack Doucey Designed by: 20-Aug-2007 2:59 C:\Mylites\Projects\4 Mile Slump\Design\[Drainage03-2.xls]US_Customary

STATE	PROJECT	SHEET NUMBER
AK	PRA-DENA 10(18)	E.5

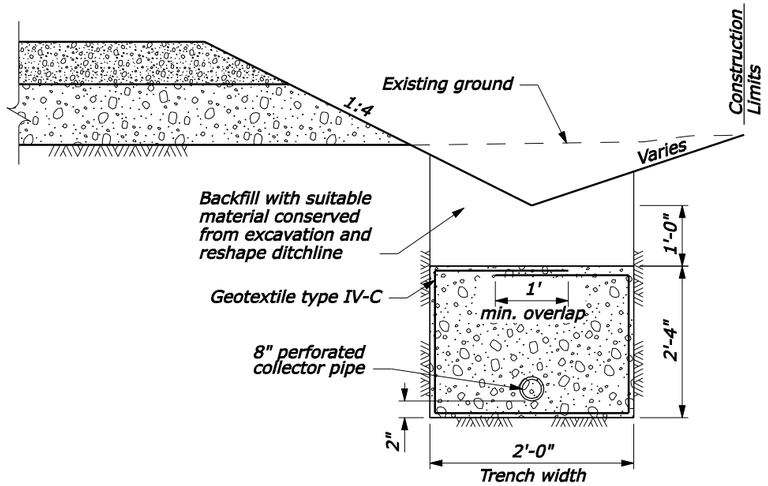

STANDARD UNDERDRAIN SYSTEM TYPICAL SECTION

212+05 TO 215+00

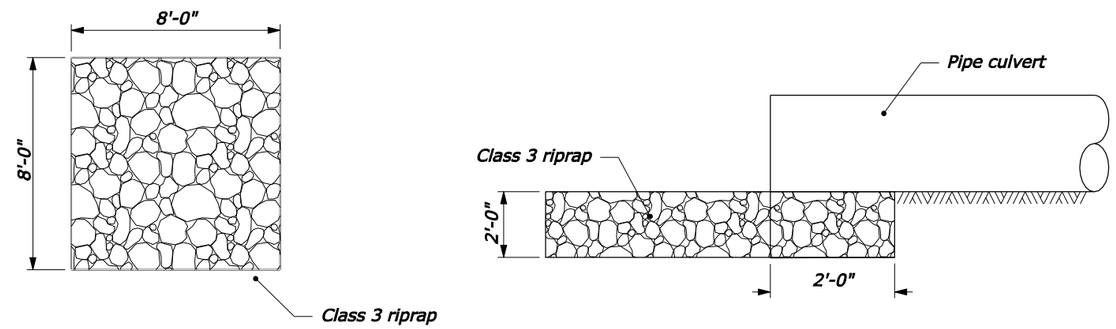

PLACED RIPRAP, CLASS 3, ENERGY DISSIPATOR

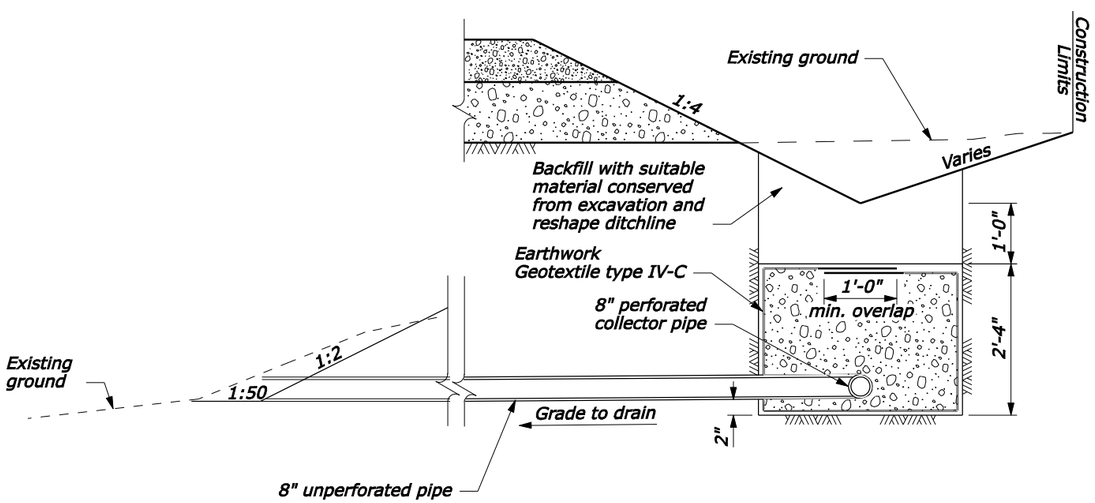

OUTLET PIPE DETAIL

PRELIMINARY
NOT FOR CONSTRUCTION

NPS PMIS No. 90819A NPS Drwg. No. 184/80246

NO SCALE

MISCELLANEOUS DRAINAGE DETAILS

F:\NPS\DENA\dena1018\New Design (Jack)\Plan Sheets\de1018db.dgn | _DATE_ * + * _FILE_ | Designed by: Malcolm Ulrich 12/2006 | Checked by: Malcolm Ulrich 12/2006