NPS NO.	REG	STATE	PROJECT	SHEET NO.	TOTAL SHEETS
604 / 42,994	SE	MS	PRA-NATR 3D30,E12	A-1	112

UNITED STATES DEPARTMENT OF THE INTERIOR

NATIONAL PARK SERVICE

NATCHEZ TRACE PARKWAY

PLANS FOR PROPOSED

PROJECT PRA-NATR 3D30, E12

PARKWAY PAVEMENT REHABILITATION, PULLOFFS & PARKING AREAS
FROM MP 239.2 TO MP 266.2 AND OTHER WORK

CHICKASAW, PONTOTOC, & LEE COUNTIES
MISSISSIPPI

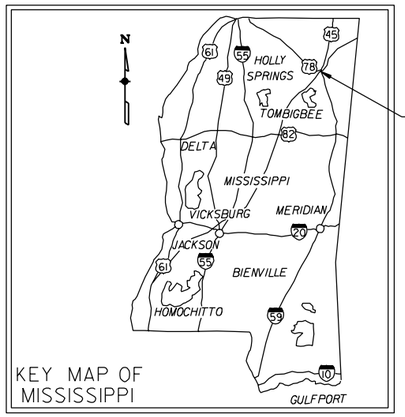

PROJECT:
PRA-NATR 3D30, E12

CONVENTIONAL SIGNS

		EXISTING	PROPOSED
COUNTY LINE			
RIGHT-OF-WAY	EXISTING	R/W	
	PROPOSED		R/W
EXISTING ROADWAY			
EXISTING TRAIL			
STREAM OR RIVER			
CONSTRUCTION LIMITS	Toe of fill		
	Top of cut		
	Transition between cut and fill		
TELEPHONE LINE	UNDERGROUND	T	T
	ON POLES	T	T
POWER LINE	UNDERGROUND	P	P
	ON POLES	P	P
PIPE LINE (GAS/WATER/OIL/SEWER)		W	W
PIPE CULVERT WITH INLET			
SINGLE OR MULTIPLE PIPE CULVERT WITH HEADWALL AND WINGWALL			
SINGLE OR MULTIPLE PIPE CULVERT WITH END SECTION			
PIPE CULVERT IN PROFILE			
SINGLE OR MULTIPLE BOX CULVERT WITH HEADWALL AND WINGWALL			
BOX CULVERT IN PROFILE			
GUARDRAIL			
RETAINING WALL			
SILT FENCE			
TREE LINE			

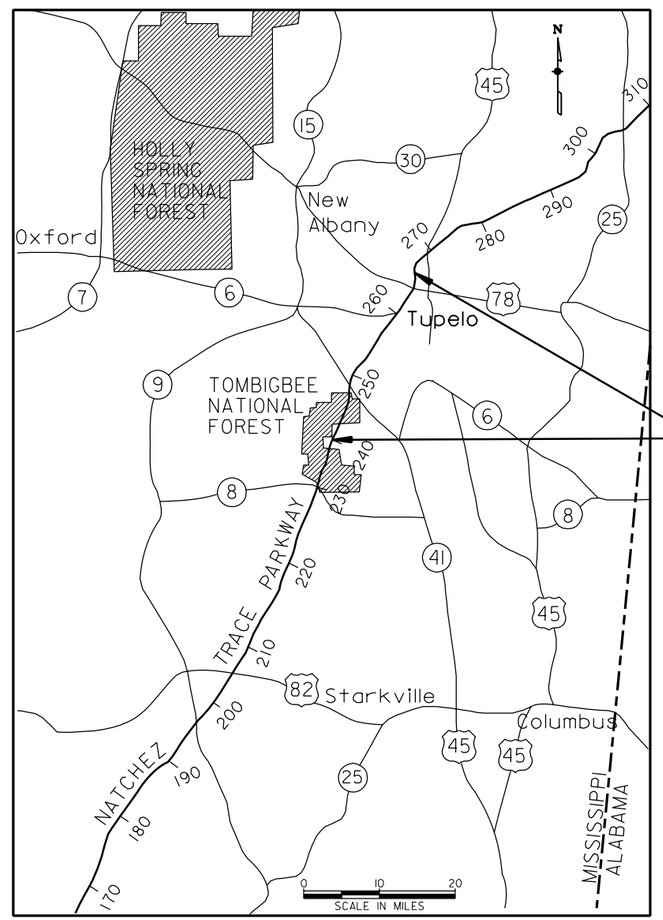

INDEX TO SHEETS

SHEET NO	DESCRIPTION
A-1	TITLE SHEET
A-2	LOCATION MAP
B-1 to B-7	TYPICAL SECTIONS
C-1 to C-27	TABULATION OF QUANTITIES, SUMMARIES & SCHEDULES
D-1 to D-14	PARKWAY CONSTRUCTION PLAN SHEETS
D-15 to D-16	MP 241 PAVEMENT REPAIR CONSTRUCTION PLAN & PROFILE SHEETS
E-1 to E-10	PARKWAY RAMP PLANS
F-1 to F-13	PARKING AREA/PULLOFF PLAN SHEETS
G-1	MCCULLOUGH BLVD. SLIDE REPAIR PLAN
N-1 to N-2	TEMPORARY TRAFFIC DETOUR PLANS
P-1	STATE RTE. 78 INTERCHANGE STRIPING PLAN
S-1 to S-29	STANDARDS AND DETAILS
T-1 to T-2	MP 241 PAVEMENT REPAIR CROSS-SECTIONS
X-1 to X-2	MCCULLOUGH BLVD. SLIDE REPAIR CROSS-SECTIONS

SPECIFICATIONS:

"Standard Specifications for Construction of Roads and Bridges on Federal Highway Projects", FP-03, U.S. Customary Units.

DESCRIPTION OF PROJECT:

IMPROVEMENT :

Resurfacing 25.5 miles of the Natchez Trace Parkway from Milepost 239.2 to Milepost 256.1 and from Milepost 257.6 to Milepost 266.2. Regrade all shoulders as needed, work on ramps, pulloffs & parking areas, drainage, striping and signing, pavement repair & other work.

	WIDTH	TYPE
SURFACE	22 ft.	Superpave Asphalt Concrete Pavement
BASE	34 ft.	Aggregate Base, Grading C or D

PROJECT LENGTH:

PARKWAY 25.5 MILES

DESIGN DESIGNATION

	Parkway
ADT(2007)	7,832
ADT(2027)	8000
DHV	1,200
D	50%
V	60 mph
C/A	Partial
e(max)	8%

PLANS PREPARED BY

U.S. DEPARTMENT OF TRANSPORTATION
FEDERAL HIGHWAY ADMINISTRATION
EASTERN FEDERAL LANDS HIGHWAY DIVISION
STERLING, VIRGINIA
AUGUST 2007

FINAL PLANS

PROJECT MANAGER	LEAD DESIGNER
ROBERT A. MORRIS	Y. EYFA

PMIS NUMBER: 90388

8/31/2007 10:59:05 AM:\Projects\natr\3d30,e12\proj_dev\CADD\A01-NATR3d30,e12_tt1.dgn

NPS NO.	REG	STATE	PROJECT	SHEET NO.
604 / 42,994	SE	MS	PRA-NATR 3D30,E12	A-2

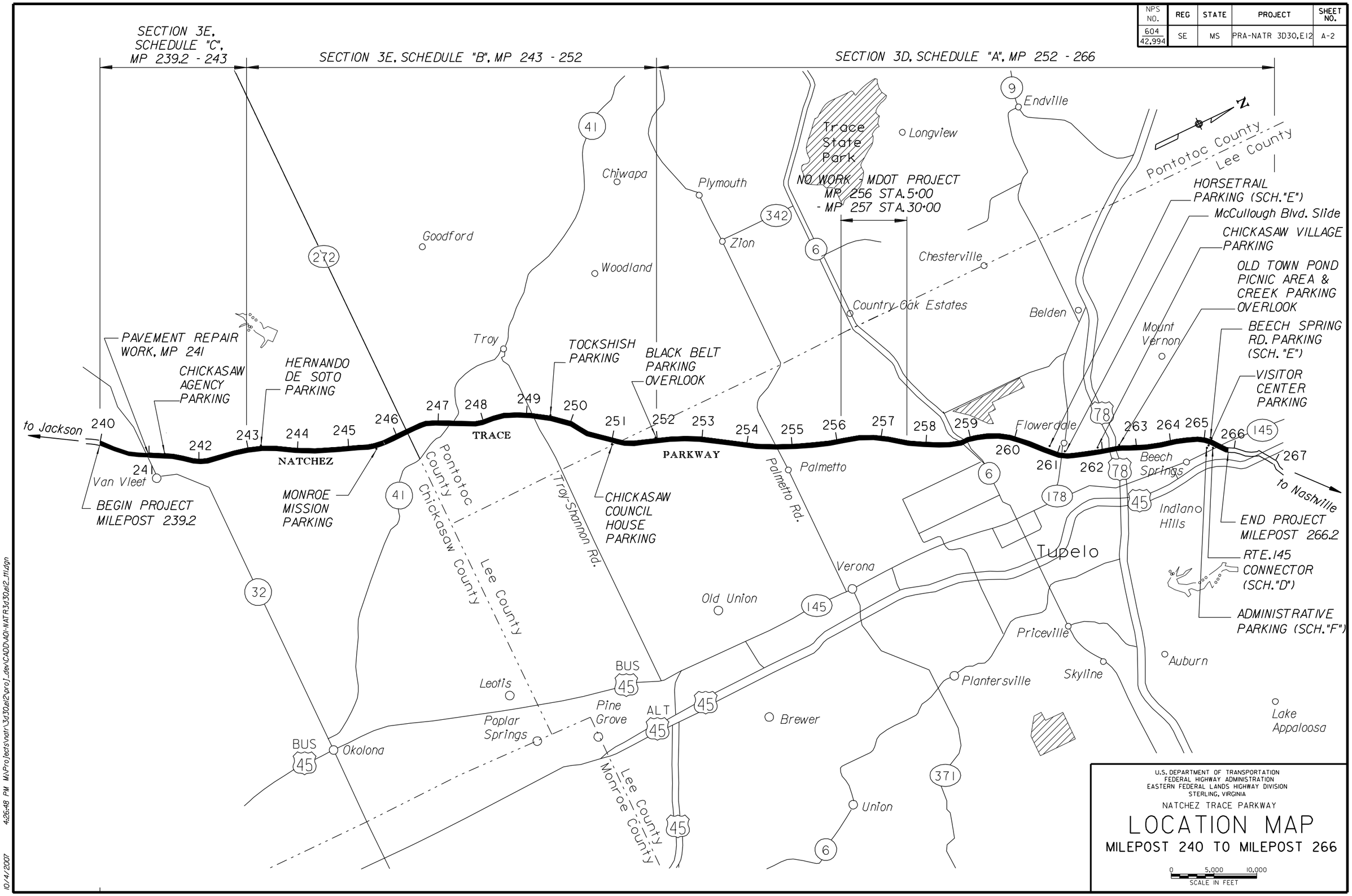

U.S. DEPARTMENT OF TRANSPORTATION
FEDERAL HIGHWAY ADMINISTRATION
EASTERN FEDERAL LANDS HIGHWAY DIVISION
STERLING, VIRGINIA

NATCHEZ TRACE PARKWAY

LOCATION MAP

MILEPOST 240 TO MILEPOST 266

0 5,000 10,000
SCALE IN FEET

10/4/2007 4:26:48 PM M:\Projects\natr\3d30,e12\proj_dev\CADD\A01-NATR3d30,e12_ttl.dgn

NPS NO.	REG	STATE	PROJECT	SHEET NO.
604 / 42,994	SE	MS	PRA-NATR 3D30,E12	B-1

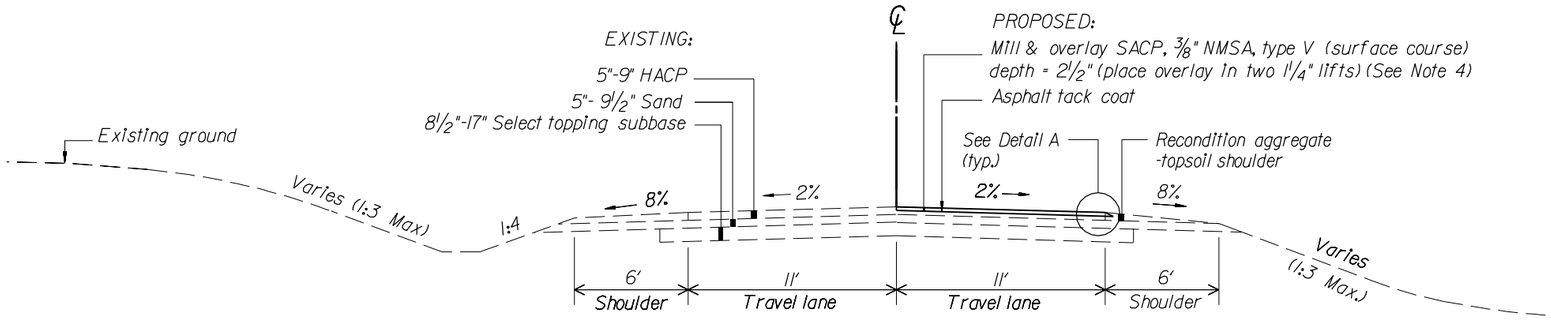

TANGENT SECTION - 2½" MILL & OVERLAY

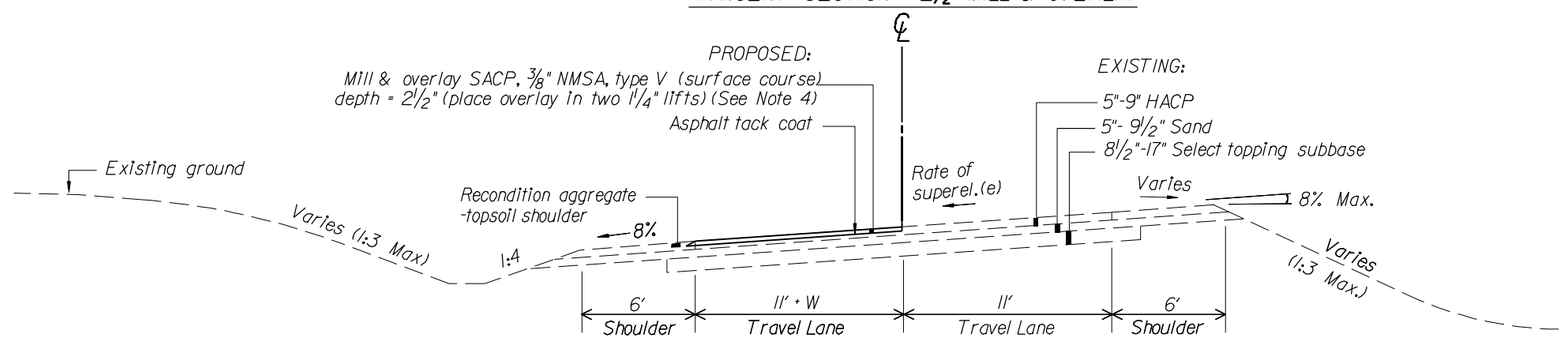

SUPERELEVATED SECTION - 2½" MILL & OVERLAY

TANGENT SECTION - 4½" MILL & 2½" OVERLAY

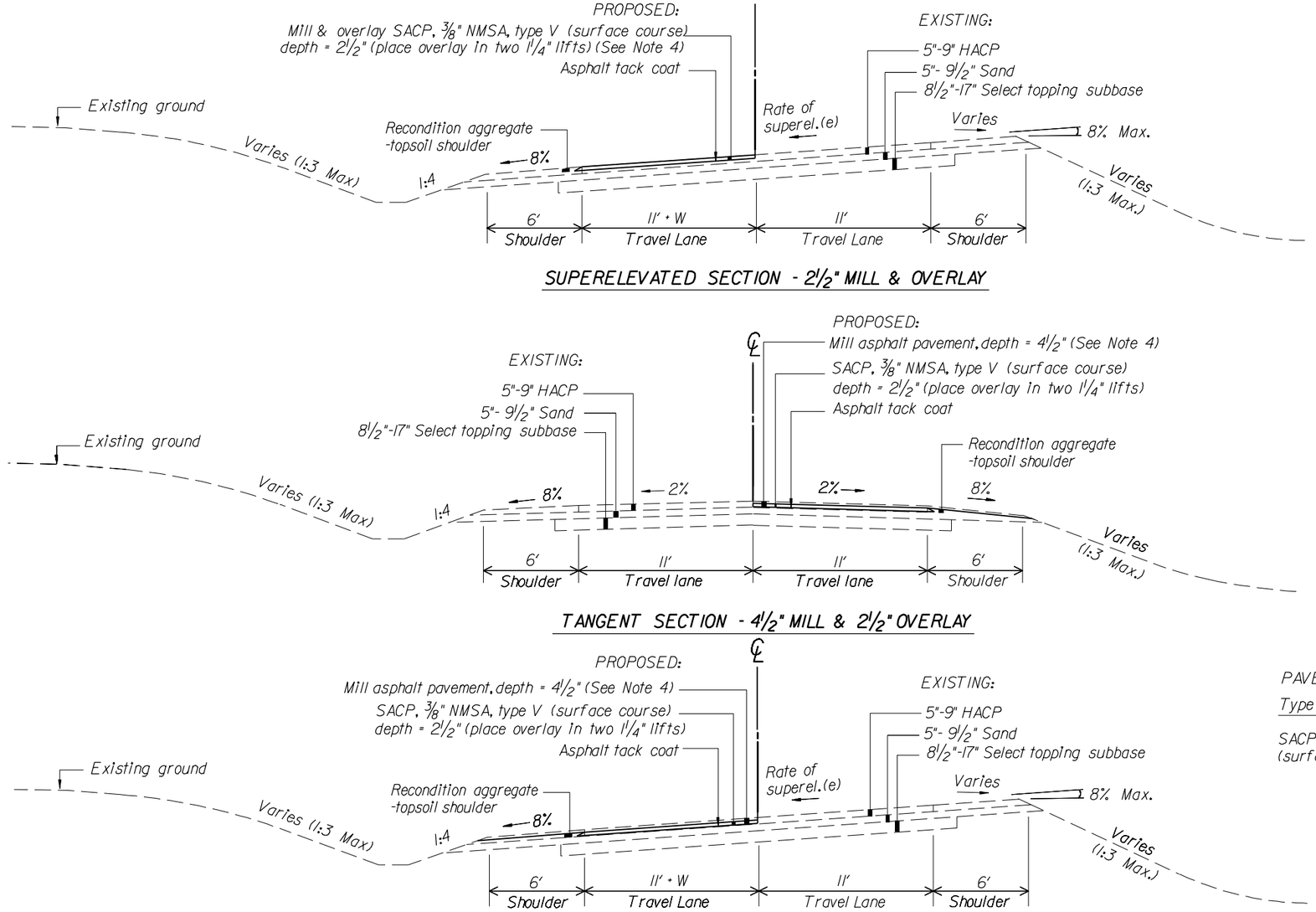

SUPERELEVATED SECTION - 4½" MILL & 2½" OVERLAY

Notes :

1. Match the existing roadway cross slope (2% min.) and superelevation as directed by the CO.
2. Topsoil (4-inch minimum depth) all disturbed areas except paved areas and shoulders.
3. Establish a 6" min. curb reveal on all bridges within the project limits (mill prior to overlay as required).
4. In accordance with FP-03 Subsection 401.15, do not leave more than 2" drop-offs between lanes overnight.
5. Prior to opening milled lanes to traffic, install temporary pavement markings (raised pavement markers) in accordance with FP-03 Subsection 635.13 (c).

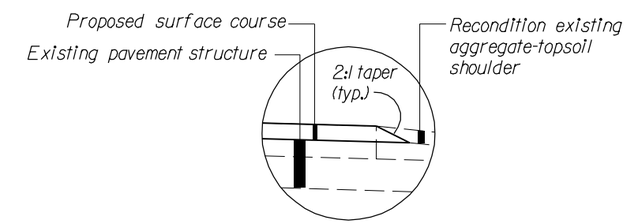

DETAIL A

PAVEMENT ABBREVIATIONS

Type	Description
SACP, ⅜" NMSA, type V (surface course)	Superpave Asphalt Concrete Pavement, ⅜" nominal maximum size aggregate, 0.3-<3 million ESAL's, type V pavement smoothness

Not to Scale

U.S. DEPARTMENT OF TRANSPORTATION
FEDERAL HIGHWAY ADMINISTRATION
EASTERN FEDERAL LANDS HIGHWAY DIVISION
STERLING, VIRGINIA

NATCHEZ TRACE PARKWAY

TYPICAL SECTIONS PARKWAY

10/4/2007 11:16:47 AM M:\Projects\natr\3d30el2\proj_dev\CADD\B-natr-3d30el2_typ.dgn

NPS NO.	REG	STATE	PROJECT	SHEET NO.
604 / 42,994	SE	MS	PRA-NATR 3D30,E12	B-2

Notes :

1. Match the existing roadway cross slope (2% min.) and superelevation as directed by the CO.
2. Topsoil (4-inch minimum depth) all disturbed areas except paved areas and shoulders.
3. Establish a 6" min. curb reveal on all bridges within the project limits (mill prior to overlay as required).
4. Construct pavement widening on the inside of the curve, as directed by the CO. Provide 200 ft long pavement widening transitions.

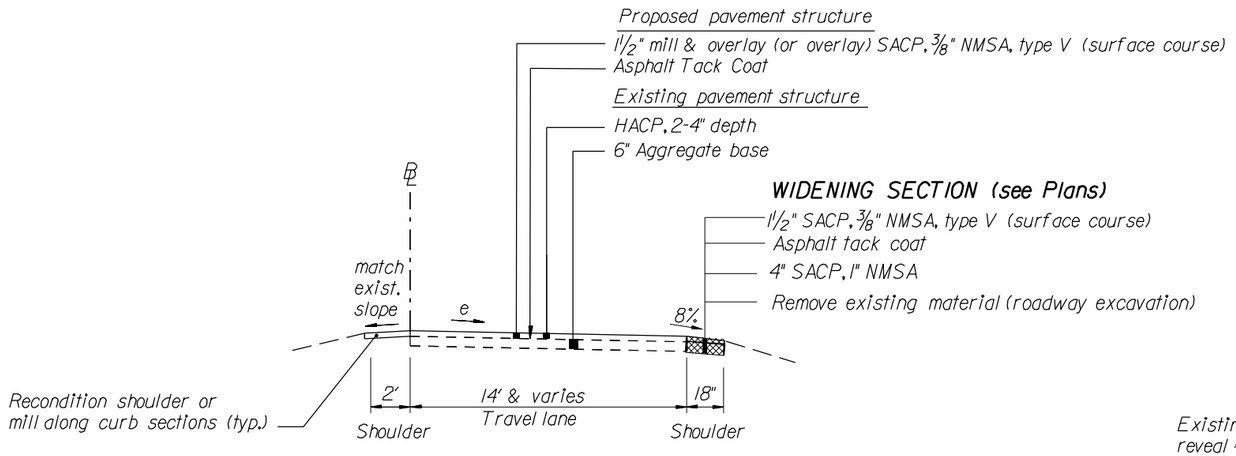

PARKWAY RAMP PAVEMENT WIDENING SECTION

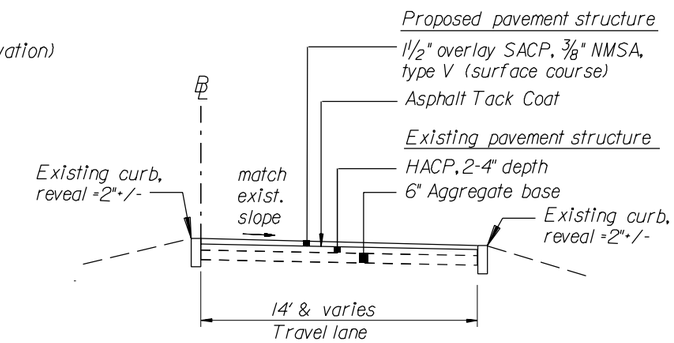

PARKWAY RAMP INTERSECTION WITH CURB

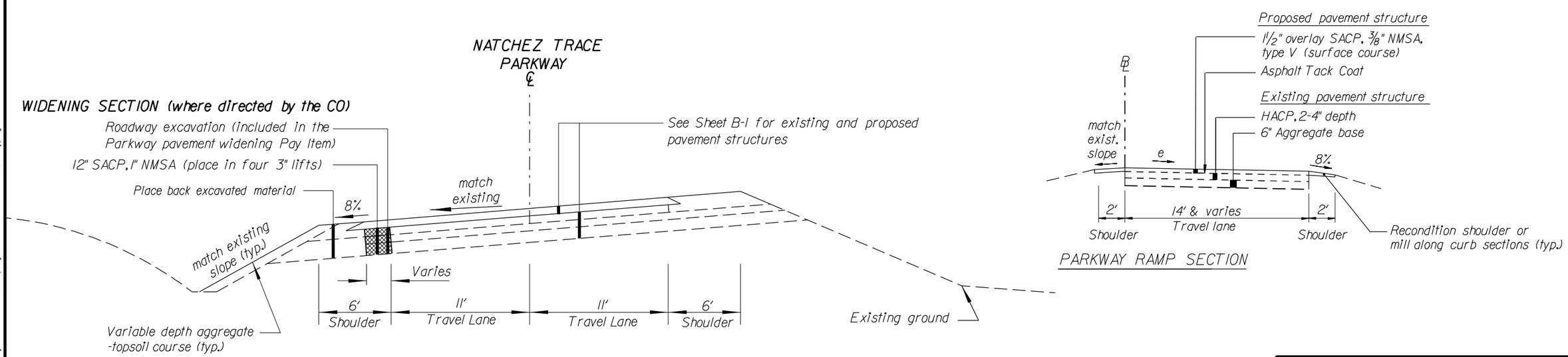

PAVEMENT WIDENING SECTION

PARKWAY RAMP SECTION

PAVEMENT ABBREVIATIONS

Type	Description
SACP, ⅜" NMSA, type V (surface course)	Superpave Asphalt Concrete Pavement, ⅜" nominal maximum size aggregate, 0.3-<3 million ESAL's, type V pavement smoothness
SACP, 1" NMSA (base course)	Superpave Asphalt Concrete Pavement, 1" nominal maximum size aggregate, 0.3-<3 million ESAL's

NO SCALE

U.S. DEPARTMENT OF TRANSPORTATION
FEDERAL HIGHWAY ADMINISTRATION
EASTERN FEDERAL LANDS HIGHWAY DIVISION
STERLING, VIRGINIA

NATCHEZ TRACE PARKWAY

TYPICAL SECTIONS PARKWAY PAVEMENT WIDENING & RAMPS

10/4/2007 11:17:29 AM M:\Projects\natr\3d30,el2\proj_dev\CAD\B-natr3d30,el2_typ.dgn

NPS NO.	REG	STATE	PROJECT	SHEET NO.
604 / 42,994	SE	MS	PRA-NATR 3D30.E12	B-3

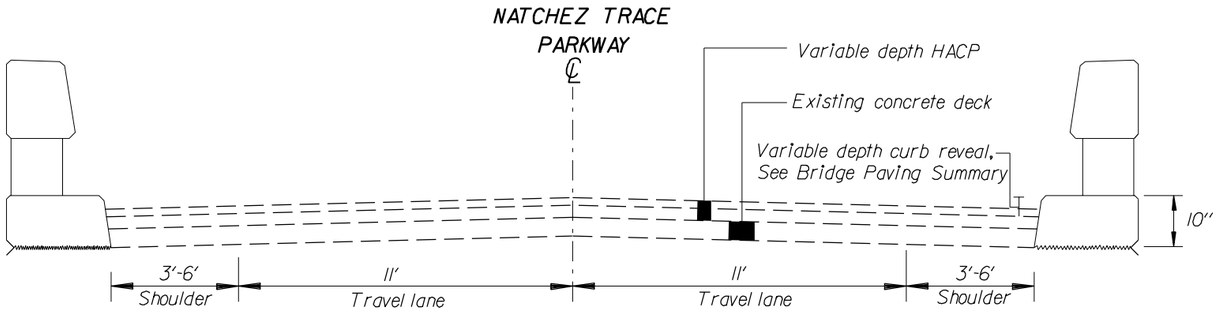

EXISTING SECTION

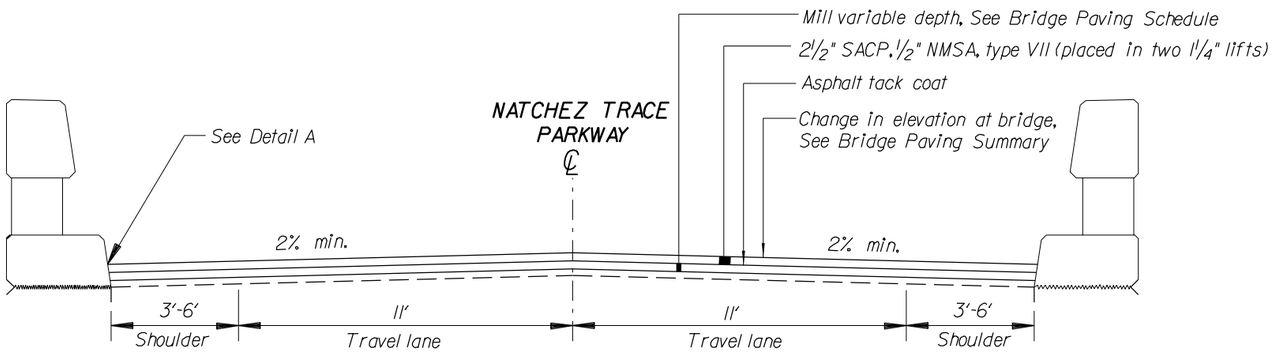

MILL & OVERLAY SECTION

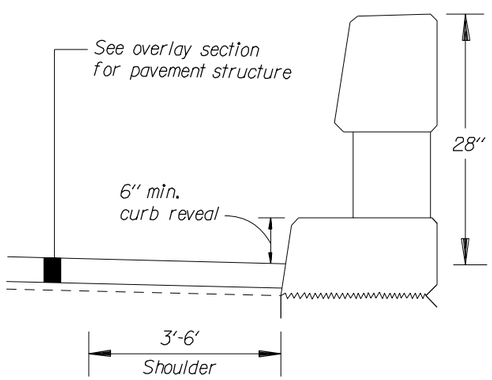

DETAIL A

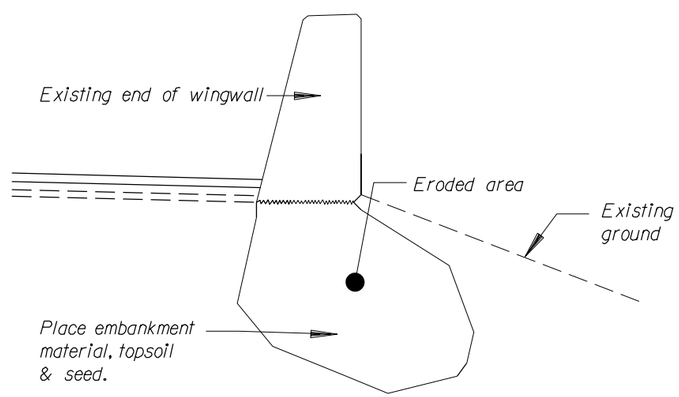

DETAIL B

Erosion repair at the ends of wingwalls

Notes:

1. Match existing roadway cross slope (2% min) and superelevation as directed by the CO.
2. Seed all disturbed areas, except pavement areas, in accordance with Section 625.
3. Rout and seal new asphalt pavement at the ends of all of bridges and over each bridge expansion joint. See Detail E414-A. Use durable pavement markings as shoulder striping, length = 350', at each bridge approach.
4. Establish a 6" curb reveal along all bridge curb sections after final paving. See Bridge Paving Summary for milling transition lengths.
5. See Plans for where to use Detail B and Detail C for erosion repairs at wingwalls.

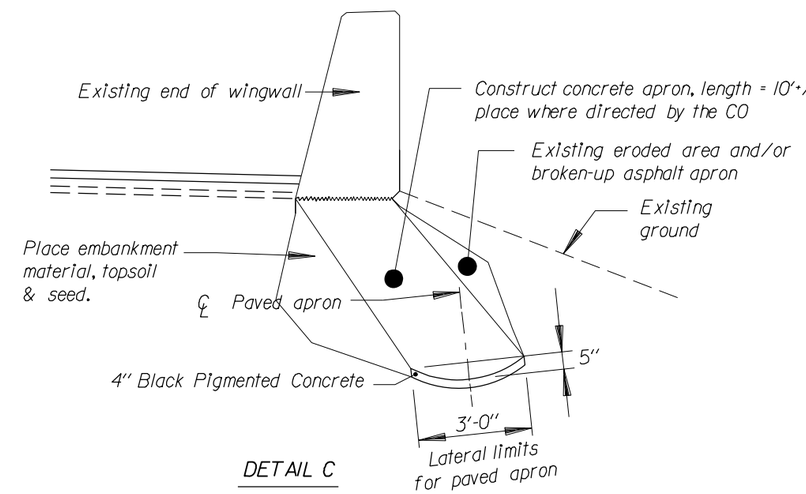

DETAIL C

Erosion repair and slope apron construction at the ends of wingwalls

PAVEMENT ABBREVIATIONS

Type	Description
SACP, 3/8" NMSA, type VII (surface course)	Superpave Asphalt Concrete Pavement, 3/8" nominal maximum size aggregate, 0.3-<3 million ESAL's, type VII pavement smoothness

NO SCALE

U.S. DEPARTMENT OF TRANSPORTATION
FEDERAL HIGHWAY ADMINISTRATION
EASTERN FEDERAL LANDS HIGHWAY DIVISION
STERLING, VIRGINIA

NATCHEZ TRACE PARKWAY

TYPICAL SECTIONS

BRIDGE PAVING

10/4/2007 11:16:14 AM M:\Projects\natr\3d30el2\proj_dev\CADD\B-natr-3d30el2_typ.dgn

NPS NO.	REG	STATE	PROJECT	SHEET NO.
604 / 42,994	SE	MS	PRA-NATR 3D30,E12	B-4

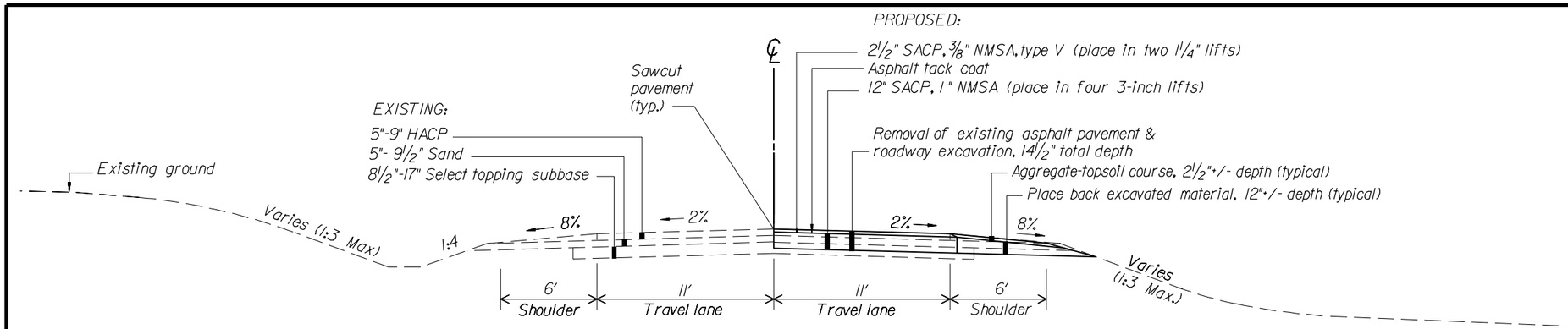

TANGENT SECTION

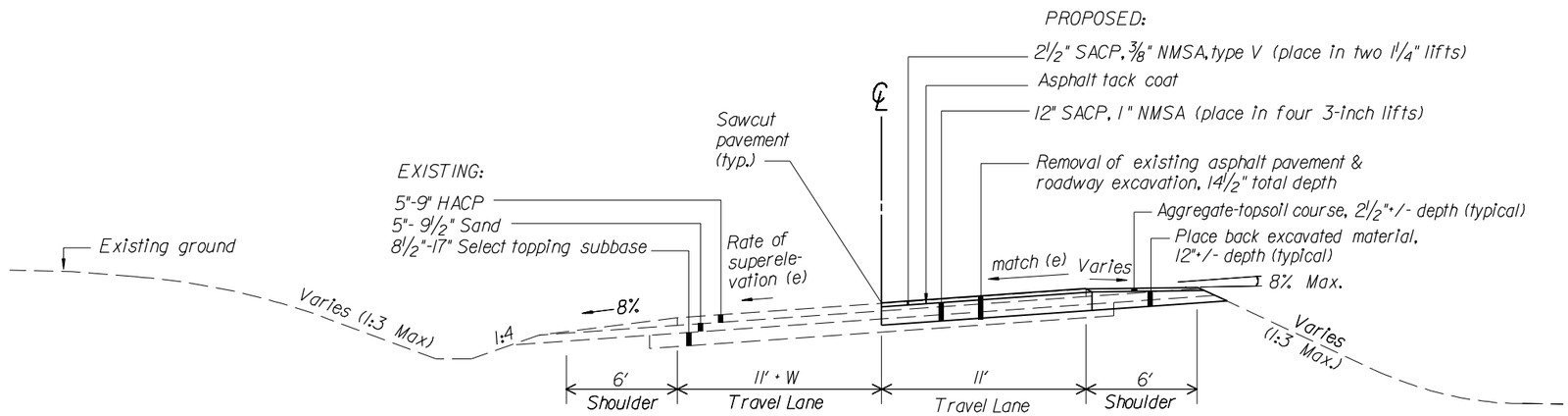

SUPERELEVATED SECTION (OUTER LANE)

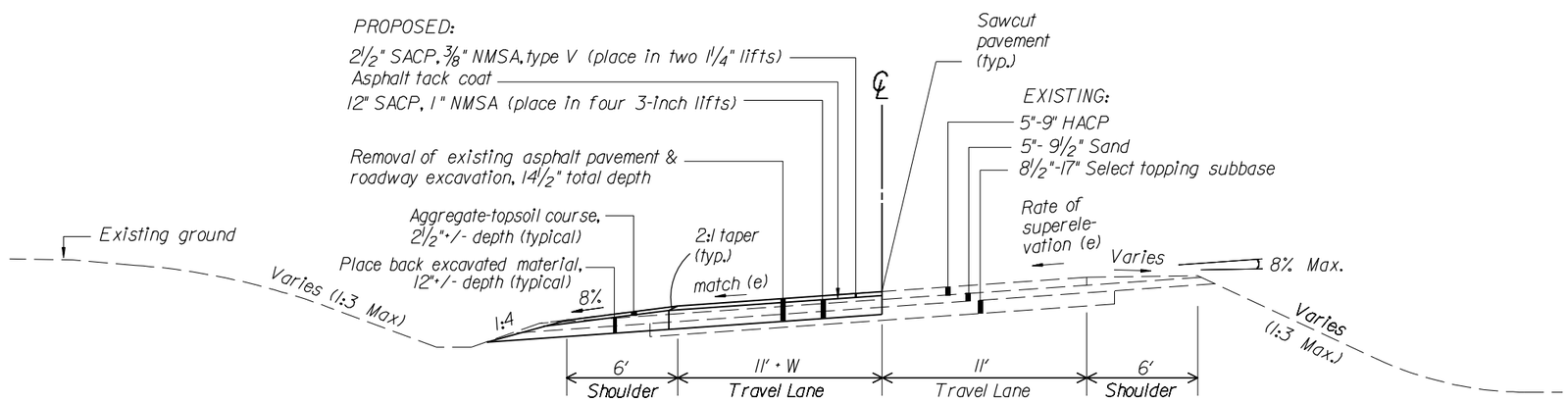

SUPERELEVATED SECTION (INNER LANE)

Notes :

1. Match the existing roadway cross slope (2% min.) and superelevation as directed by the CO.
2. Topsoil (4-inch minimum depth) all disturbed areas except paved areas and shoulders.
3. This Typical Section applies at the following location & where directed by the CO:

   MP 263 NB & SB, Sta. 19+92 to 20+62

4. Do not expose subgrade for more than 3 calendar days after removing existing asphalt pavement and before placing new asphalt pavement.
5. At the 4 1/2" mill depth locations, the profile will be lowered and the roadway excavation quantities wil be increased accordingly (see Plans for locations).

PAVEMENT ABBREVIATIONS

Type	Description
SACP, 3/8" NMSA, type V (surface course)	Superpave Asphalt Concrete Pavement, 3/8" nominal maximum size aggregate, 0.3-<3 million ESAL's, type V pavement smoothness
SACP, 1" NMSA (base course)	Superpave Asphalt Concrete Pavement, 1" nominal maximum size aggregate, 0.3-<3 million ESAL's

Not to Scale

U.S. DEPARTMENT OF TRANSPORTATION
FEDERAL HIGHWAY ADMINISTRATION
EASTERN FEDERAL LANDS HIGHWAY DIVISION
STERLING, VIRGINIA

NATCHEZ TRACE PARKWAY

TYPICAL SECTIONS RECONSTRUCTION AREAS MP 239 - MP 266.2

10/4/2007 11:18:33 AM M:\Projects\natr\3d30el2\proj_dev\CAD\B-natr-3d30el2_typ.dgn

NPS NO.	REG	STATE	PROJECT	SHEET NO.
604 / 42,994	SE	MS	PRA-NATR 3D30,E12	B-5

NOTES:

1. Match the existing roadway cross slope (2% min.) and superelevation as directed by the CO.
2. Topsoil (4-inch minimum depth) all disturbed areas except paved areas and shoulders.
3. Do not expose subgrade for more than 3 calendar days after removing existing asphalt pavement and before placing new asphalt pavement.
4. This Typical Section applies at MP 241, length = 232.43' +/- , where directed by the CO.

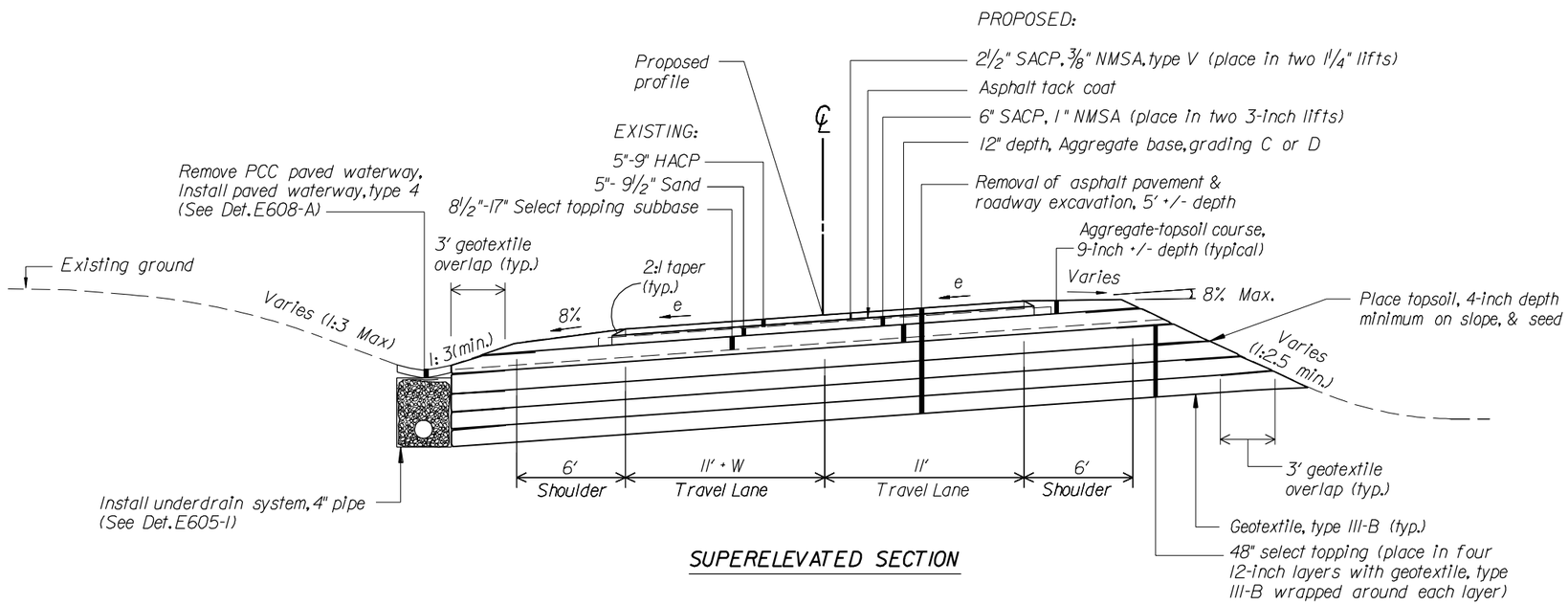

SUPERELEVATED SECTION

PAVEMENT ABBREVIATIONS

Type	Description
SACP, 3/8" NMSA, type V (surface course)	Superpave Asphalt Concrete Pavement, 3/8" nominal maximum size aggregate, 0.3-<3 million ESAL's, type V pavement smoothness
SACP, 1" NMSA (base course)	Superpave Asphalt Concrete Pavement, 1" nominal maximum size aggregate, 0.3-<3 million ESAL's

No Scale

U.S. DEPARTMENT OF TRANSPORTATION
FEDERAL HIGHWAY ADMINISTRATION
EASTERN FEDERAL LANDS HIGHWAY DIVISION
STERLING, VIRGINIA

NATCHEZ TRACE PARKWAY

TYPICAL SECTIONS PAVEMENT REPAIR AREA- MP 241 STA. 0+00-2+32+/-

10/4/2007 11:18:50 AM M:\Projects\natr\3d30\el2\proj_dev\CADD\B-natr-3d30-el2_typ.dgn

NPS NO.	REG	STATE	PROJECT	SHEET NO.
604 / 42,994	SE	MS	PRA-NATR 3D30,E12	B-6

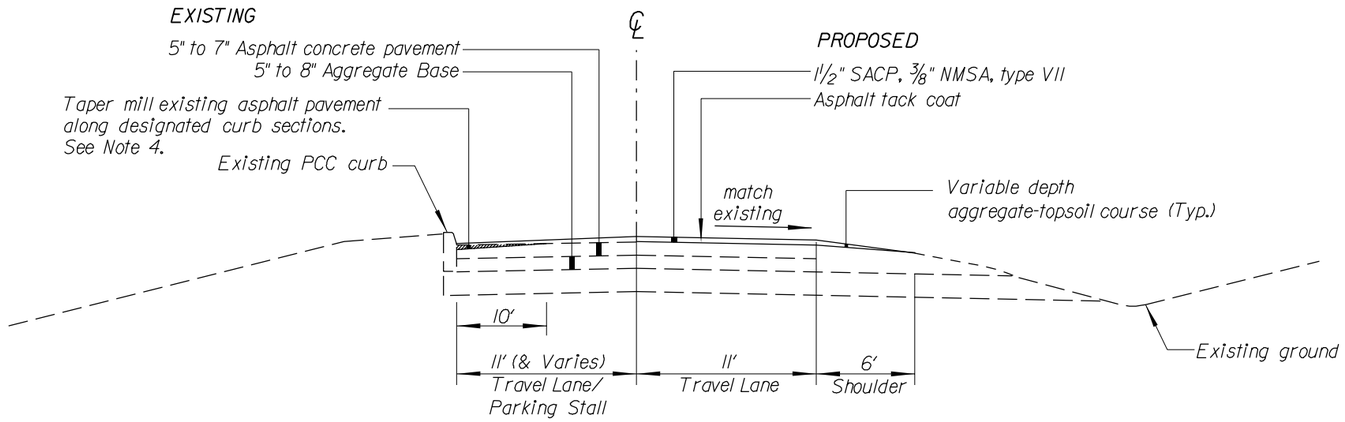

OVERLAY SECTION

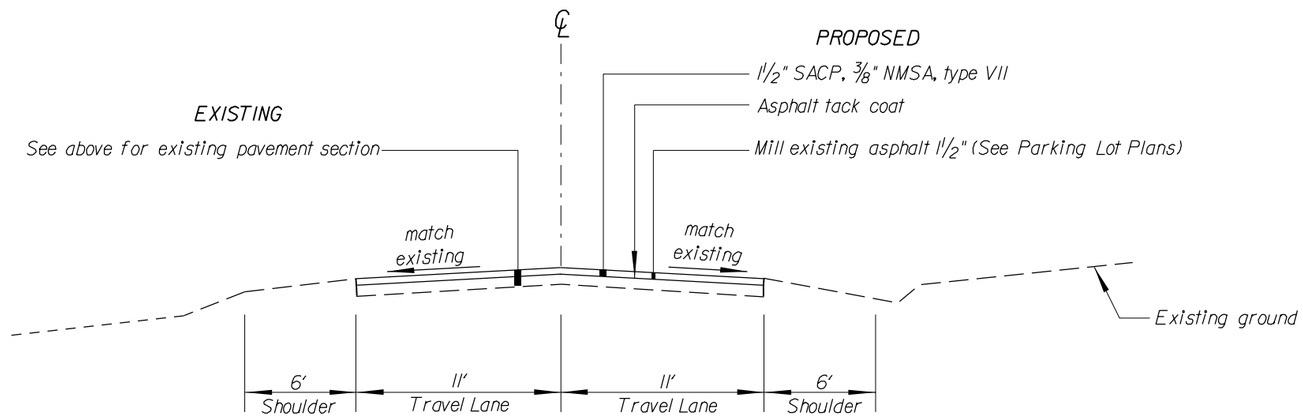

MILL AND OVERLAY SECTION

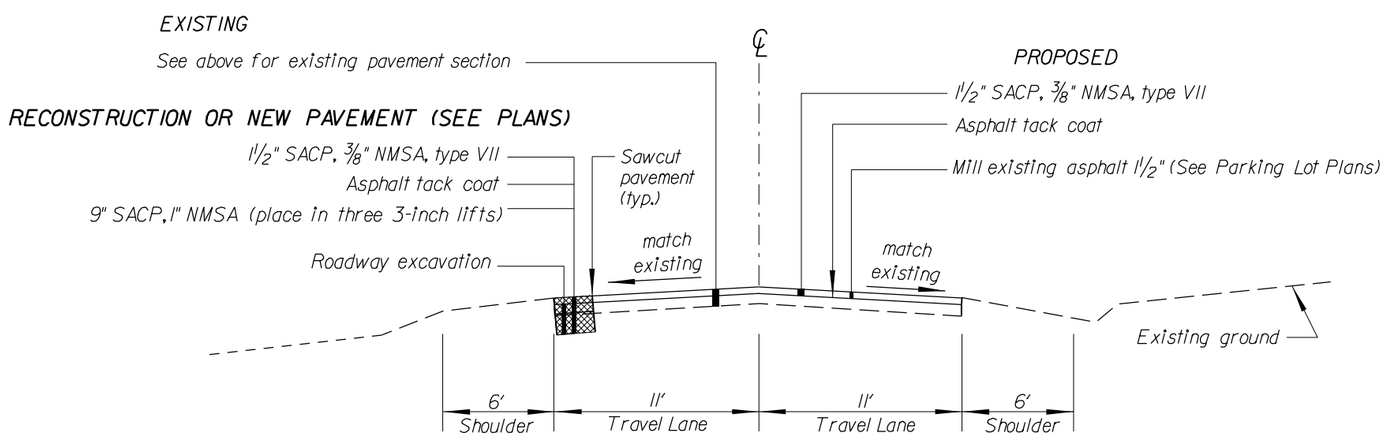

SPOT RECONSTRUCTION SECTION

Notes:

1. Match existing roadway cross slope (2% min) and superelevation as directed by the CO.
2. Seed all disturbed areas, except pavement areas, in accordance with Section 625.
3. Place asphalt wedge and leveling material, as needed, on overlay sections to ensure positive drainage exists across the roadway section.
4. Re-establish a 6" curb reveal in all parking areas and ensure that all parking areas drain properly to preclude ponding.

PAVEMENT ABBREVIATIONS

Type	Description
SACP, ⅜" NMSA, type VII (surface course)	Superpave Asphalt Concrete Pavement, ⅜" nominal maximum size aggregate, 0.3-<3 million ESAL's, type VII pavement smoothness
SACP, 1" NMSA (base course)	Superpave Asphalt Concrete Pavement, 1" nominal maximum size aggregate, 0.3-<3 million ESAL's

NO SCALE

U.S. DEPARTMENT OF TRANSPORTATION
FEDERAL HIGHWAY ADMINISTRATION
EASTERN FEDERAL LANDS HIGHWAY DIVISION
STERLING, VIRGINIA

NATCHEZ TRACE PARKWAY

TYPICAL SECTIONS

SIDEROADS AND PARKING AREAS

10/4/2007 11:15:50 AM M:\Projects\natr\3d30e12\proj_dev\CADD\B-natr-3d30e12_typ.dgn

NPS NO.	REG	STATE	PROJECT	SHEET NO.
604 / 42,994	SE	MS	PRA-NATR 3D30,E12	B-7

NOTES:

1. Remove the failed soil from the face of the slope and replace with suitable fill material. Remove material for the full height of the failed slope section, & laterally to a maximum 5 ft beyond the limits of the slide.

2. Bench the back of the excavation in accordance with Subsection 204.09 of the FP-03 & STD. E204-2.

3. Place a type IVI-B geotextile over the exposed subgrade & along the backslope of the excavation prior to placing backfill material.

4. Reconstruct the slope by placing compacted embankment material (unclassified borrow) in accordance with Section 204 & Subsection 704.06 of the FP.

5. Place topsoil, depth=4", type 5 erosion control mat and seed over the impacted slide area.

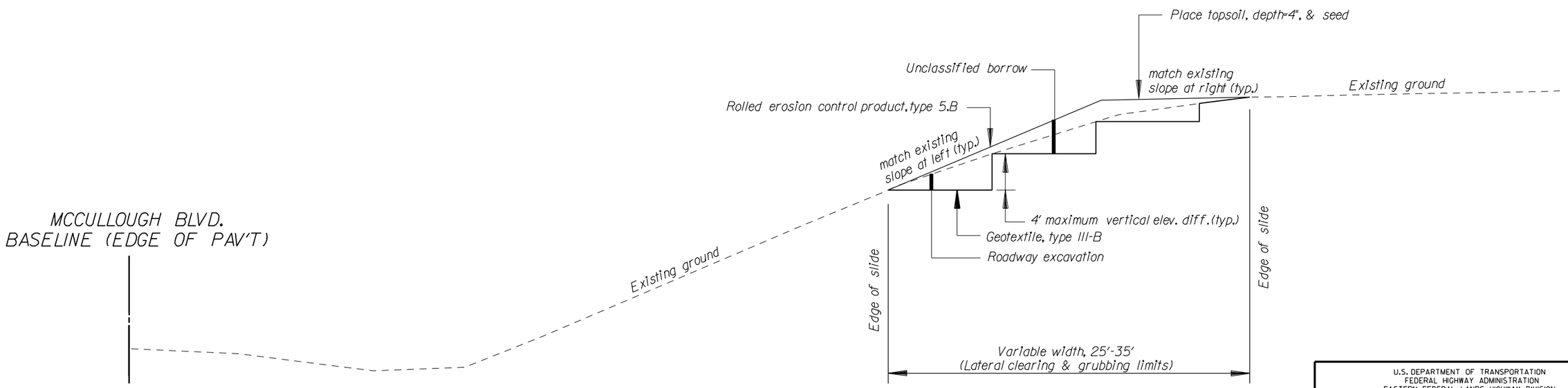

No Scale

U.S. DEPARTMENT OF TRANSPORTATION
FEDERAL HIGHWAY ADMINISTRATION
EASTERN FEDERAL LANDS HIGHWAY DIVISION
STERLING, VIRGINIA

NATCHEZ TRACE PARKWAY

TYPICAL SECTIONS
SLIDE REPAIR
MCCULLOUGH BLVD.
(MP 262.5)

9/5/2007 3:24:44 PM M:\Projects\nat\3d30el2\proj_dev\CADD\B-natr.3d30el2_typ.dgn

NPS NO.	REG	STATE	PROJECT	SHEET NO.
604 42,994	SE	MS	PRA-NATR 3D30,E12	C-1

SCHEDULE A- PAVEMENT REHABILITATION MP 252-266.2

PLAN SHEET SECTION -------->>				ESTIMATED QUANTITIES	
ITEM	DESCRIPTION	UNIT		PLAN	BID SCHEDULE
15101-0000	MOBILIZATION	LPSM		ALL	ALL
15201-0000	CONSTRUCTION SURVEY AND STAKING	LPSM		ALL	ALL
15401-0000	CONTRACTOR TESTING	LPSM		ALL	ALL
20101-0000	CLEARING AND GRUBBING	ACRE	0.1	0.1	0.1
20301-2400	REMOVAL OF SIGN	EACH	9	9	9
20302-0500	REMOVAL OF CURB, CONCRETE	LNFT	35	35	35
20303-1600	REMOVAL OF PAVEMENT, ASPHALT	SQYD	570	570	570
20303-3200	REMOVAL OF SIDEWALK, CONCRETE	SQYD	25	25	25
20315-0000	SAWCUTTING PAVEMENT	LNFT	675	675	675
20401-0000	ROADWAY EXCAVATION	CUYD	235	235	235
20403-0000	UNCLASSIFIED BORROW	CUYD	145	145	145
20701-1100	EARTHWORK GEOTEXTILE, TYPE III-B	SQYD	260	260	260
30302-2000	SHOULDER RECONDITIONING	LNFT	135000	135000	135,000
30501-0000	AGGREGATE-TOPSOIL COURSE	TON	425	425	425
40101-0200	SUPERPAVE PAVEMENT, 3/8-INCH NOMINAL MAXIMUM SIZE AGGREGATE, 0.3 TO *3 MILLION ESAL , type V pavement smoothness	TON	28360	28360	28,360
40101-0200	SUPERPAVE PAVEMENT, 3/8-INCH NOMINAL MAXIMUM SIZE AGGREGATE, 0.3 TO *3 MILLION ESAL , type VII pavement smoothnes	TON	3540	3540	3,540
40101-1400	SUPERPAVE PAVEMENT, 1-INCH NOMINAL MAXIMUM SIZE AGGREGATE, 0.3 TO *3 MILLION ESAL	TON	345	345	345
40101-1400	SUPERPAVE PAVEMENT, 1-INCH NOMINAL MAXIMUM SIZE AGGREGATE, 0.3 TO *3 MILLION ESAL (PARKWAY PAVEMENT WIDENING)	TON	1490	1490	1,490
40102-0200	SUPERPAVE PAVEMENT, 3/8-INCH NOMINAL MAXIMUM SIZE AGGREGATE, 0.3 TO *3 MILLION ESAL, WEDGE AND LEVELING COURSE	TON	300	300	300
41301-0400	ASPHALT PAVEMENT MILLING, 1 1/2-INCH DEPTH	SQYD	20100	20100	20,100
41301-0700	ASPHALT PAVEMENT MILLING, 2 1/2-INCH DEPTH	SQYD	132300	132300	132,300
41301-1100	ASPHALT PAVEMENT MILLING, 4 1/2-INCH DEPTH	SQYD	57500	57500	57,500
41405-0000	SAW CUTTING AND JOINT SEALING	LNFT	2900	2900	2,900
41405-0000	SAW CUTTING AND JOINT SEALING (WIDE EXPANSION JOINT - UP TO 3-INCH)	LNFT	60	60	60

SCHEDULE A- PAVEMENT REHABILITATION MP 252-266.2

PLAN SHEET SECTION -------->>				ESTIMATED QUANTITIES	
ITEM	DESCRIPTION	UNIT		PLAN	BID SCHEDULE
60901-1700	CURB, CONCRETE, 18-INCH DEPTH	LNFT	220	220	220
61501-0500	SIDEWALK, EXPOSED AGGREGATE CONCRETE	SQYD	85	85	85
61504-2000	ACCESSIBILITY RAMP, EXPOSED AGGREGATE CONCRETE	SQYD	11	11	11
62401-0300	FURNISHING AND PLACING TOPSOIL, 4-INCH DEPTH	SQYD	720	720	720
62502-0000	TURF ESTABLISHMENT	SQYD	720	720	720
62901-1300	ROLLED EROSION CONTROL PRODUCT, TYPE 5.B	SQYD	220	220	220
63301-0000	SIGN SYSTEM (parkway entrance signs)	EACH	2	2	2
63304-0900	SIGNS, ALUMINUM PANELS, TYPE 3 SHEETING	SQFT	230	230	230
63308-3000	OBJECT MARKER, TYPE 3	EACH	64	64	64
63401-1500	PAVEMENT MARKINGS, TYPE H, SOLID	LNFT	200000	200000	200,000
63401-1500	PAVEMENT MARKINGS, TYPE H, SOLID (durable pavement markings)	LNFT	23800	23800	23,800
63401-1600	PAVEMENT MARKINGS, TYPE H, BROKEN	LNFT	64000	64000	64,000
63405-3250	PAVEMENT MARKINGS, TYPE H, ACCESSIBILITY SYMBOL	EACH	4	4	4
63406-0200	RAISED PAVEMENT MARKER TYPE B	EACH	66	66	66
63501-0000	TEMPORARY TRAFFIC CONTROL	LPSM		ALL	ALL
63701-0000	FIELD OFFICE	EACH	1	1	1

SCHEDULE E - HORSETRAIL & BEECH SPRINGS RD. PARKING AREAS

PLAN SHEET SECTION -------->>				ESTIMATED QUANTITIES	
ITEM	DESCRIPTION	UNIT		PLAN	BID SCHEDULE
15101-0000	MOBILIZATION	LPSM		ALL	ALL
15201-0000	CONSTRUCTION SURVEY AND STAKING	LPSM		ALL	ALL
15401-0000	CONTRACTOR TESTING	LPSM		ALL	ALL
40101-0200	SUPERPAVE PAVEMENT, 3/8-INCH NOMINAL MAXIMUM SIZE AGGREGATE, 0.3 TO *3 MILLION ESAL , TYPE VII PAVEMENT SMOOTHNESS	TON	225	225	225
41301-0400	ASPHALT PAVEMENT MILLING, 1 1/2-INCH DEPTH	SQYD	385	385	385
60920-0000	RESET WHEELSTOP	EACH	35	35	35

U.S. DEPARTMENT OF TRANSPORTATION
FEDERAL HIGHWAY ADMINISTRATION
EASTERN FEDERAL LANDS HIGHWAY DIVISION
STERLING, VIRGINIA

NATCHEZ TRACE PARKWAY

TABULATION OF QUANTITIES SCHEDULES A & E

10/4/2007 12:08:52 PW M:\Projects\natr\3d30el2\proj_dev\CADD\tab.dgn

NPS NO.	REG	STATE	PROJECT	SHEET NO.
604 42,994	SE	MS	PRA-NATR 3D30,E12	C-2

SCHEDULE B- PAVEMENT REHABILITATION MP 243-252

ITEM	DESCRIPTION	UNIT	PLAN SHEET SECTION -------->>	ESTIMATED QUANTITIES PLAN	ESTIMATED QUANTITIES BID SCHEDULE
15101-0000	MOBILIZATION	LPSM		ALL	ALL
15201-0000	CONSTRUCTION SURVEY AND STAKING	LPSM		ALL	ALL
15401-0000	CONTRACTOR TESTING	LPSM		ALL	ALL
15706-1000	SOIL EROSION CONTROL, INLET PROTECTION	EACH	2	2	2
20220-1000	REMOVAL, INDIVIDUAL TREE	EACH	1	1	1
20301-1400	REMOVAL OF INLET	EACH	1	1	1
20301-2400	REMOVAL OF SIGN	EACH	3	3	3
20302-0500	REMOVAL OF CURB, CONCRETE	LNFT	250	250	250
20303-1600	REMOVAL OF PAVEMENT, ASPHALT	SQYD	15	15	15
20315-0000	SAWCUTTING PAVEMENT	LNFT	50	50	50
20401-0000	ROADWAY EXCAVATION	CUYD	40	40	40
20403-0000	UNCLASSIFIED BORROW	CUYD	10	10	10
25102-3000	PLACED RIPRAP, CLASS 3	TON	2	2	2
30302-2000	SHOULDER RECONDITIONING	LNFT	100000	100000	100,000
30501-0000	AGGREGATE-TOPSOIL COURSE	TON	105	105	105
40101-0200	SUPERPAVE PAVEMENT, 3/8-INCH NOMINAL MAXIMUM SIZE AGGREGATE, 0.3 TO *3 MILLION ESAL , type V pavement smoothness	TON	18485	18485	18,485
40101-0200	SUPERPAVE PAVEMENT, 3/8-INCH NOMINAL MAXIMUM SIZE AGGREGATE, 0.3 TO *3 MILLION ESAL , type VII pavement smoothness	TON	970	970	970
40101-1400	SUPERPAVE PAVEMENT, 1-INCH NOMINAL MAXIMUM SIZE AGGREGATE, 0.3 TO *3 MILLION ESAL	TON	75	75	75
40101-1400	SUPERPAVE PAVEMENT, 1-INCH NOMINAL MAXIMUM SIZE AGGREGATE, 0.3 TO *3 MILLION ESAL (PARKWAY PAVEMENT WIDENING)	TON	1655	1655	1,655
40102-0200	SUPERPAVE PAVEMENT, 3/8-INCH NOMINAL MAXIMUM SIZE AGGREGATE, 0.3 TO *3 MILLION ESAL, WEDGE AND LEVELING COURSE	TON	200	200	200
41301-0400	ASPHALT PAVEMENT MILLING, 1 1/2-INCH DEPTH	SQYD	1120	1120	1,120
41301-1100	ASPHALT PAVEMENT MILLING, 4 1/2-INCH DEPTH	SQYD	129150	129150	129,150
41405-0000	SAW CUTTING AND JOINT SEALING	LNFT	815	815	815
60201-0800	24-INCH PIPE CULVERT (RCP)	LNFT	10	10	10

SCHEDULE B- PAVEMENT REHABILITATION MP 243-252

ITEM	DESCRIPTION	UNIT	PLAN SHEET SECTION -------->>	ESTIMATED QUANTITIES PLAN	ESTIMATED QUANTITIES BID SCHEDULE
60403-1700	INLET, TYPE 6A	EACH	1	1	1
60403-2200	INLET, TYPE 7A	EACH	1	1	1
60801-0400	PAVED WATERWAY, TYPE 4 (black pigmented)	SQYD	35	35	35
60901-1700	CURB, CONCRETE, 18-INCH DEPTH	LNFT	250	250	250
60920-0000	RESET WHEELSTOP	EACH	4	4	4
62401-0300	FURNISHING AND PLACING TOPSOIL, 4-INCH DEPTH	SQYD	320	320	320
62502-0000	TURF ESTABLISHMENT	SQYD	320	320	320
62701-0000	SOD, SOLID	SQYD	25	25	25
63304-0900	SIGNS, ALUMINUM PANELS, TYPE 3 SHEETING	SQFT	117	117	117
63308-3000	OBJECT MARKER, TYPE 3	EACH	32	32	32
63401-1500	PAVEMENT MARKINGS, TYPE H, SOLID	LNFT	105000	105000	105,000
63401-1500	PAVEMENT MARKINGS, TYPE H, SOLID (durable pavement markings)	LNFT	11200	11200	11,200
63401-1600	PAVEMENT MARKINGS, TYPE H, BROKEN	LNFT	51000	51000	51,000
63406-0200	RAISED PAVEMENT MARKER TYPE B	EACH	32	32	32
63501-0000	TEMPORARY TRAFFIC CONTROL	LPSM		ALL	ALL

SCHEDULE F-ADMINISTRATIVE PARKING AREA

ITEM	DESCRIPTION	UNIT	PLAN SHEET SECTION -------->>	ESTIMATED QUANTITIES PLAN	ESTIMATED QUANTITIES BID SCHEDULE
15101-0000	MOBILIZATION	LPSM		ALL	ALL
15201-0000	CONSTRUCTION SURVEY AND STAKING	LPSM		ALL	ALL
15401-0000	CONTRACTOR TESTING	LPSM		ALL	ALL
40101-0200	SUPERPAVE PAVEMENT, 3/8-INCH NOMINAL MAXIMUM SIZE AGGREGATE, 0.3 TO *3 MILLION ESAL , TYPE VII PAVEMENT SMOOTHNESS	TON	195	195	195
41301-0400	ASPHALT PAVEMENT MILLING, 1 1/2-INCH DEPTH	SQYD	2285	2285	2,285
63401-1500	PAVEMENT MARKINGS, TYPE H, SOLID	LNFT	380	380	380

U.S. DEPARTMENT OF TRANSPORTATION
FEDERAL HIGHWAY ADMINISTRATION
EASTERN FEDERAL LANDS HIGHWAY DIVISION
STERLING, VIRGINIA

NATCHEZ TRACE PARKWAY

TABULATION OF QUANTITIES SCHEDULE B & F

10/4/2007 4:30:16 PM M:\Projects\natr\3d30e\2\proj_dev\CADD\tabdgn

NPS NO.	REG	STATE	PROJECT	SHEET NO.
604 42,994	SE	MS	PRA-NATR 3030,E12	C-3

SCHEDULE C- PAVEMENT REHABILITATION MP 239.2-243

ITEM	DESCRIPTION	UNIT	PLAN SHEET SECTION -------->>	ESTIMATED QUANTITIES PLAN	ESTIMATED QUANTITIES BID SCHEDULE
15101-0000	MOBILIZATION	LPSM		ALL	ALL
15201-0000	CONSTRUCTION SURVEY AND STAKING	LPSM		ALL	ALL
15401-0000	CONTRACTOR TESTING	LPSM		ALL	ALL
15705-0100	SOIL EROSION CONTROL, SILT FENCE	LNFT	300	300	300
20101-0000	CLEARING AND GRUBBING	ACRE	0.2	0.2	0.2
20301-2400	REMOVAL OF SIGN	EACH	1	1	1
20303-1600	REMOVAL OF PAVEMENT, ASPHALT	SQYD	625	625	625
20401-0000	ROADWAY EXCAVATION	CUYD	2235	2235	2,235
20403-0000	UNCLASSIFIED BORROW	CUYD	35	35	35
20415-0000	SELECT TOPPING	CUYD	1800	1800	1,800
20701-1100	EARTHWORK GEOTEXTILE, TYPE III-B	SQYD	7500	7500	7,500
30101-4000	AGGREGATE BASE GRADING C OR D (#57 CRUSHED STONE)	TON	645	645	645
30302-2000	SHOULDER RECONDITIONING	LNFT	40000	40000	40,000
30501-0000	AGGREGATE-TOPSOIL COURSE	TON	165	165	165
40101-0200	SUPERPAVE PAVEMENT, 3/8-INCH NOMINAL MAXIMUM SIZE AGGREGATE, 0.3 TO *3 MILLION ESAL , TYPE V PAVEMENT SMOOTHNESS	TON	7320	7320	7,320
40101-0200	SUPERPAVE PAVEMENT, 3/8-INCH NOMINAL MAXIMUM SIZE AGGREGATE, 0.3 TO *3 MILLION ESAL , TYPE VII PAVEMENT SMOOTHNESS	TON	580	580	580
40101-1400	SUPERPAVE PAVEMENT, 1-INCH NOMINAL MAXIMUM SIZE AGGREGATE, 0.3 TO *3 MILLION ESAL	TON	220	220	220
40101-1400	SUPERPAVE PAVEMENT, 1-INCH NOMINAL MAXIMUM SIZE AGGREGATE, 0.3 TO *3 MILLION ESAL (PARKWAY PAVEMENT WIDENING)	TON	730	730	730
40102-0200	SUPERPAVE PAVEMENT, 3/8-INCH NOMINAL MAXIMUM SIZE AGGREGATE, 0.3 TO *3 MILLION ESAL, WEDGE AND LEVELING COURSE	TON	100	100	100
41301-0400	ASPHALT PAVEMENT MILLING, 1 1/2-INCH DEPTH	SQYD	170	170	170
41301-1100	ASPHALT PAVEMENT MILLING, 4 1/2-INCH DEPTH	SQYD	52900	52900	52,900
41405-0000	SAW CUTTING AND JOINT SEALING	LNFT	580	580	580
60501-0000	STANDARD UNDERDRAIN SYSTEM (4-INCH PIPE)	LNFT	255	255	255
60801-0400	PAVED WATERWAY, TYPE 4 (BLACK-PIGMENTED)	SQYD	80	80	80

SCHEDULE C- PAVEMENT REHABILITATION MP 239.2-243

ITEM	DESCRIPTION	UNIT	PLAN SHEET SECTION -------->>	ESTIMATED QUANTITIES PLAN	ESTIMATED QUANTITIES BID SCHEDULE
62401-0300	FURNISHING AND PLACING TOPSOIL, 4-INCH DEPTH	SQYD	1000	1000	1,000
62502-0000	TURF ESTABLISHMENT	SQYD	1000	1000	1,000
62701-0000	SOD, SOLID	SQYD	55	55	55
63303-0900	SIGN, ALUMINUM PANEL, TYPE 3 SHEETING	EACH	45	45	45
63308-3000	OBJECT MARKER, TYPE 3	EACH	12	12	12
63401-1500	PAVEMENT MARKINGS, TYPE H, SOLID pavement markings)	LNFT	50000	50000	50,000
63401-1500	PAVEMENT MARKINGS, TYPE H, SOLID (DURABLE PAVEMENT MARKINGS)	LNFT	4200	4200	4,200
63401-1600	PAVEMENT MARKINGS, TYPE H, BROKEN	LNFT	19000	19000	19,000
63406-0200	RAISED PAVEMENT MARKER TYPE B	EACH	12	12	12
63501-0000	TEMPORARY TRAFFIC CONTROL	LPSM		ALL	ALL

SCHEDULE D- ROUTE 145 CONNECTOR RD.

ITEM	DESCRIPTION	UNIT	PLAN SHEET SECTION -------->>	ESTIMATED QUANTITIES PLAN	ESTIMATED QUANTITIES BID SCHEDULE
15101-0000	MOBILIZATION	LPSM		ALL	ALL
15201-0000	CONSTRUCTION SURVEY AND STAKING	LPSM		ALL	ALL
15401-0000	CONTRACTOR TESTING	LPSM		ALL	ALL
20401-0000	ROADWAY EXCAVATION	CUYD	20	20	20
30501-0000	AGGREGATE-TOPSOIL COURSE	TON	75	75	75
40101-0200	SUPERPAVE PAVEMENT, 3/8-INCH NOMINAL MAXIMUM SIZE AGGREGATE, 0.3 TO *3 MILLION ESAL , TYPE V PAVEMENT SMOOTHNESS	TON	700	700	700
40101-1400	SUPERPAVE PAVEMENT, 1-INCH NOMINAL MAXIMUM SIZE AGGREGATE, 0.3 TO *3 MILLION ESAL	TON	40	40	40
63401-1500	PAVEMENT MARKINGS, TYPE H, SOLID	LNFT	3500	3500	3,500
63501-0000	TEMPORARY TRAFFIC CONTROL	LPSM		ALL	ALL

U.S. DEPARTMENT OF TRANSPORTATION
FEDERAL HIGHWAY ADMINISTRATION
EASTERN FEDERAL LANDS HIGHWAY DIVISION
STERLING, VIRGINIA

NATCHEZ TRACE PARKWAY

TABULATION OF QUANTITIES SCHEDULES C & D

10/4/2007 4:30:52 PM M:\Projects\natr\3d30el2\proj_dev\CADD\tabdgn

NPS NO.	REG	STATE	PROJECT	SHEET NO.
604 / 42,994	SE	NC	PRA-NATR 3D30,E12	C-4

LOCATION NAME OF ROAD	Station to station	PRIMARY PROJECT ROADWAY (MILES)	INCIDENTAL ROADWAY (MILES)
Natchez Trace Parkway			
MP 252	0+00 to 52+80	1.00	
MP 253	0+00 to 52+80	1.00	
MP 254	0+00 to 52+80	1.00	
MP 255	0+00 to 52+80	1.00	
Ramp to Palmetto Road			0.17
MP 256	0+00 to 5+00	0.09	
MP 257	30+00 to 52+80	0.43	
MP 258	0+00 to 52+80	1.00	
NB Ramp to Cliff Gookin Blvd.			0.15
SB Ramp to Cliff Gookin Blvd.			0.15
MP 259	0+00 to 52+80	1.00	
NB Ramp to MS HWY 6			0.28
SB Ramp to MS HWY 6			0.22
MP 260	0+00 to 52+80	1.00	
MP 261	0+00 to 52+80	1.00	
Chickasaw Village Parking Access Rd.			0.20
MP 262	0+00 to 52+80	1.00	
NB Ramp to McCullough Blvd.			0.21
SB Ramp to McCullough Blvd.			0.20
MP 263	0+00 to 52+80	1.00	
Ramp from EB MS HWY 78			0.15
Ramp from WB MS HWY 78			0.12
Old Town Creek Parking Access Rd.			0.22
MP 264	0+00 to 52+80	1.00	
MP 265	0+00 to 52+80	1.00	
MP 266	0+00 to 11+80	0.22	
Schedule A Subtotal (miles)		**12.75**	**2.08**
Schedule A Total (miles)		**14.83**	

LOCATION NAME OF ROAD	Station to station	PRIMARY PROJECT ROADWAY (MILES)	INCIDENTAL ROADWAY (MILES)
Natchez Trace Parkway			
Ramp to Davis Lake Road			0.09
MP 243	0+00 to 52+80	1.00	
MP 244	0+00 to 52+80	1.00	
MP 245	0+00 to 52+80	1.00	
MP 246	0+00 to 52+80	1.00	
Ramp to MS HWY 41			0.11
MP 247	0+00 to 52+80	1.00	
MP 248	0+00 to 52+80	1.00	
MP 249	0+00 to 52+80	1.00	
MP 250	0+00 to 52+80	1.00	
MP 251	0+00 to 52+80	1.00	
Ramp to Pontocola Road			0.16
Schedule B Subtotal (miles)		**9.00**	**0.37**
Schedule B Total (miles)		**9.37**	
Natchez Trace Parkway			
Ramp to MS HWY 32			0.09
MP 239	12+00 to 52+80	0.77	
MP 240	0+00 to 52+80	1.00	
MP 241	0+00 to 52+80	1.00	
MP 242	0+00 to 52+80	1.00	
Ramp to Davis Lake Road			0.09
Schedule C Subtotal (miles)		**3.77**	**0.18**
Schedule C Total (miles)		**3.96**	
Connector to MS HWY 145			0.28
Schedule D Subtotal (miles)		**0.00**	**0.28**
Schedule D Total (miles)		**0.28**	

U.S. DEPARTMENT OF TRANSPORTATION
FEDERAL HIGHWAY ADMINISTRATION
EASTERN FEDERAL LANDS HIGHWAY DIVISION
STERLING, VIRGINIA

NATCHEZ TRACE PARKWAY

MILEAGE TABULATION

8/27/2007 11:42:17 AM M:\Projects\natr\3d30e12\proj_dev\CADD\schedule.dgn

NPS NO.	REG	STATE	PROJECT	SHEET NO.
604 / 42,994	SE	MS	PRA-NATR 3D30,E12	C-5

LOCATION STA. TO STA.	20303-1600 REMOVAL OF PAVEMENT, ASPHALT (SQYD)	20315-0000 SAWCUTTING PAVEMENT (LNFT)	20401-0000 ROADWAY EXCAVATION (CUYD)	20403-0000 UNCLASSIFIED BORROW (CUYD)	20701-1100 EARTHWORK GEOTEXTILE, TYPE III-B (SQYD)	30302-2000 SHOULDER RECONDITIONING (LNFT)	30501-0000 AGGREGATE-TOPSOIL COURSE (TON)	40101-0200 SACP 3/8" NMSA 0.3-<3 ESAL, TYPE V PAV'T SM. (TON)	40101-0200 SACP 3/8" NMSA 0.3-<3 ESAL, TYPE VII PAV'T SM. (TON)	40101-1400 SACP 1" NMSA 0.3-<0.3 ESAL (TON)	40101-1400 SACP 1" NMSA 0.3-<0.3 ESAL (Pkwy pav't widen.) (TON)	40102-0200 SACP 3/8" NMSA 0.3-<3 ESAL, WEDGE & LEVEL (TON)	41301-0400 ASPHALT PAV'T MILLING 1.5" depth (SQYD)	41301-0700 ASPHALT PAV'T MILLING 2.5" depth (SQYD)	41301-1100 ASPHALT PAV'T MILLING, 4.5" depth (SQYD)
Natchez Trace Parkway															
MP 252															
0+00 to 21+00						4200		722							5133
21+00 to 52+80						5270		906						7773	
33+65 39+10				1					239						
MP 253															
0+00 to 9+25						1150		198						2261	
9+25 to 52+80						8710		1497	153						10646
MP 254															
0+00 to 22+20						4440		763							5427
22+20 to 52+80						6120		1052						7480	
MP 255															
0+00 to 52+80						10090		1734	103					12907	
13+80 Rt. to 13+80 Rt.				1											
Ramp to Palmetto Road			5					284		10			3319		
MP 256															
0+00 to 5+00						1000		172						1222	
MP 257															
30+00 to 52+80						3670		631	195					5573	
MP 258															
0+00 to 38+80						6060		1042	372					9484	
Ramp to Cliff Gookin Blvd, EB	82	119	11				52	334		22			962		
Ramp to Cliff Gookin Blvd, WB	74	109	20				50	398		41			1060		
38+80 to 52+80						2800		481						3422	
MP 259															
0+00 to 52+80						9770		1679	173					12907	
Ramp to MS Hwy 6, EB			11				71	481		23			1570		
Ramp to MS Hwy 6, WB			15				38	422		31			1448		
MP 260															
0+00 to 7+00						1400		241			55			1711	
7+00 to 52+80						8220		1413	206		308				11196
MP 261															
0+00 to 42+10						8420		1365	105	1	222				10291
Chickasaw Village PA & Rd.			1				32	198	96	1			1135		
42+10 to 52+80						2140		368							2616
MP 262															
0+00 to 28+35						3880		667	392		224				6930
Ramp to McCullough Blvd, EB			9				48	385		19					
Ramp to McCullough Blvd, WB			90	107	214		38	330		46					
28+35 to 52+80						4890		840			74			5977	
MP 263															
0+00 to 52+80						8530		1966	444		80			16290	
16+80 Lt. to 16+80 Lt.				3											
reconstruction 19+92-20+62	171	114	52				11			120					
Ramp to MS Hwy 78, EB	113	159						342					4056		
Ramp to MS Hwy 78, WB	78	114						313					3703		
38+40 Lt. to 44+70 Lt.				4											
Old Town Overlook PAs & Rd.				17			48	261	237				1023		
MP 264															
0+00 to 52+80						8810		1580	396		47			13444	
MP 265															
0+00 to 52+80						10560		2228	105		236			16281	
Tupelo HQs Visitor Center PA															
MP 266															
0+00 to 11+80						2360		490			110			3477	
SCHEDULE A SUBTOTAL	**518**	**615**	**214**	**133**	**214**	**122,490**	**388**	**25,781**	**3,216**	**314**	**1,356**	**0**	**18,276**	**120,209**	**52,238**
AS DIRECTED	**52**	**60**	**21**	**12**	**21**	**12510**	**37**	**2579**	**324**	**31**	**134**	**300**	**1824**	**12091**	**5262**
SCHEDULE A TOTAL	**570**	**675**	**235**	**145**	**235**	**135,000**	**425**	**28,360**	**3,540**	**345**	**1,490**	**300**	**20,100**	**132,300**	**57,500**

U.S. DEPARTMENT OF TRANSPORTATION
FEDERAL HIGHWAY ADMINISTRATION
EASTERN FEDERAL LANDS HIGHWAY DIVISION
STERLING, VIRGINIA

NATCHEZ TRACE PARKWAY

EARTHWORK AND PAVING SUMMARY - SCHEDULE A - MP 252-266

10/4/2007 11:24:17 AM M:\Projects\natr\3d30e12\proj_dev\CADD\schedule.dgn

NPS NO.	REG	STATE	PROJECT	SHEET NO.
604 / 42,994	SE	MS	PRA-NATR 3D30,E12	C-6

LOCATION STA. TO STA.	20303-1600 REMOVAL OF PAVEMENT, ASPHALT (SQYD)	20315-0000 SAWCUTTING PAVEMENT (LNFT)	20401-0000 ROADWAY EXCAVATION (CUYD)	20403-0000 UNCLASSIFIED BORROW (CUYD)	30302-2000 SHOULDER RECONDITIONING (LNFT)	30501-0000 AGGREGATE-TOPSOIL COURSE (TON)	40101-0200 SACP 3/8" NMSA 0.3-<3 ESAL, TYPE V PAV'T SM. (TON)	40101-0200 SACP 3/8" NMSA 0.3-<3 ESAL, TYPE VII PAV'T SM. (TON)	40101-1400 SACP 1" NMSA 0.3-<0.3 ESAL (TON)	40101-1400 SACP 1" NMSA 0.3-<0.3 ESAL (Pkwy pav't widen.) (TON)	40102-0200 SACP 3/8" NMSA 0.3-<3 ESAL, WEDGE & LEVEL (TON)	41301-0400 ASPHALT PAV'T MILLING 1.5" depth (SQYD)	41301-1100 ASPHALT PAV'T MILLING, 4.5" depth (SQYD)
Natchez Trace Parkway													
MP 243													
0+00 to 21+80				1	3910		672	99					5329
6+25 Lt. to 6+25 Lt.													
Ramp to Davis Lake Rd.			17			33	225		33				
Hernando Desoto Parking								120				177	
21+80 to 52+80					6200		1066						7578
MP 244													
0+00 to 52+80					10560		1815						12907
MP 245													
0+00 to 52+80					10560		1815			249			12907
Monroe Mission Parking Area	11	30	4					74	5			245	
MP 246													
0+00 to 52+80					10560		1815			339			12907
Ramp to MS Hwy 41			9			38	257		19				
MP 247													
0+00 to 52+80					10560		1660	197		214			12907
MP 248													
0+00 to 52+80				1	10560		1815			327			12907
MP 249													
0+00 to 31+80					5980		1028			82			7773
5+40 to 7+30	2	14		4				83					
Tockshish Parking Area								106					1247
31+80 to 52+80					4200		722						5133
MP 250													
0+00 to 52+80					10560		1815			197			12907
MP 251													
0+00 to 7+45					1490		256						1821
Chickasaw Council House PA								90				178	
7+45 to 52+80					8590		1559			96			11086
Ramp to Pontocola Rd.			6			25	283		12				
Black Belt Overlook Parking								115				417	
SCHEDULE B SUBTOTAL	**13**	**44**	**36**	**6**	**93,730**	**96**	**16,803**	**884**	**69**	**1,504**	**0**	**1,017**	**117,407**
AS DIRECTED	**2**	**6**	**4**	**4**	**6270**	**9**	**1682**	**86**	**6**	**151**	**200**	**103**	**11743**
SCHEDULE B TOTAL	**15**	**50**	**40**	**10**	**100,000**	**105**	**18,485**	**970**	**75**	**1,655**	**200**	**1,120**	**129,150**

U.S. DEPARTMENT OF TRANSPORTATION
FEDERAL HIGHWAY ADMINISTRATION
EASTERN FEDERAL LANDS HIGHWAY DIVISION
STERLING, VIRGINIA

NATCHEZ TRACE PARKWAY

EARTHWORK AND PAVING SUMMARY - SCHEDULE B - MP 243-251

10/4/2007 11:27:01 AM M:\Projects\natr\3d30e12\proj_dev\CADD\schedule.dgn

NPS NO.	REG	STATE	PROJECT	SHEET NO.
604 / 42,994	SE	MS	PRA-NATR 3D30,E12	C-7

SCHEDULE C

LOCATION STA. TO STA.	20303-1600 REMOVAL OF PAVEMENT, ASPHALT (SQYD)	20401-0000 ROADWAY EXCAVATION (CUYD)	20403-0000 UNCLASSIFIED BORROW (CUYD)	20415-0000 SELECT TOPPING (CUYD)	20701-1100 EARTHWORK GEOTEXTILE, TYPE III-B (SQYD)	30101-4000 AGGREGATE BASE, GRADING C OR D (TON)	30302-2000 SHOULDER RECONDITIONING (LNFT)	30501-0000 AGGREGATE-TOPSOIL COURSE (TON)	40101-0200 SACP 3/8" NMSA 0.3-<3 ESAL, TYPE V PAV'T SM. (TON)	40101-0200 SACP 3/8" NMSA 0.3-<3 ESAL, TYPE VII PAV'T SM. (TON)	40101-1400 SACP 1" NMSA 0.3-<0.3 ESAL (TON)	40101-1400 SACP 1" NMSA 0.3-<0.3 ESAL (Pkwy pav't widen.) (TON)	40102-0200 SACP 3/8" NMSA 0.3-<3 ESAL, WEDGE & LEVEL (TON)	41301-0400 ASPHALT PAV'T MILLING 1.5" depth (SQYD)	41301-1100 ASPHALT PAV'T MILLING, 4.5" depth (SQYD)
Natchez Trace Parkway															
MP 239															
Ramp to MS Hwy 32		4						22	178		8				
12+00 to 52+80							7810		1342	77		181			9973
MP 240															
0+00 to 52+80							10560		1815			339			12907
MP 241															
0+00 to 52+80							8296		1506	394		142			12340
reconstruction 0+00-2+32	568	2120	33	1713	6790	586		130			193				
Chickasaw Agency Parking										57				156	
MP 242															
0+00 to 52+80							10560		1815						12907
SCHEDULE C SUBTOTAL	568	2,124	33	1,713	6,790	586	37,226	152	6,656	528	201	662	0	156	48,126
AS DIRECTED	57	211	2	87	710	59	2774	13	664	52	19	68	100	14	4774
SCHEDULE C TOTAL	625	2,335	35	1,800	7,500	645	40,000	165	7,320	580	220	730	100	170	52,900

SCHEDULE D

LOCATION STA. TO STA.	20401-0000 ROADWAY EXCAVATION (CUYD)	30501-0000 AGGREGATE-TOPSOIL COURSE (TON)	40101-0200 SACP 3/8" NMSA 0.3-<3 ESAL,TYPE-V PVT. SMOOTHNESS (TON)	40101-1400 SACP 1" NMSA 0.3-<0.3 ESAL (TON)
Hwy 145 Visitor Center				
Connector Road.	17	70	638	35
SCHEDULE D SUBTOTAL	17	70	638	35
AS DIRECTED	3	5	62	5
SCHEDULE D TOTAL	20	75	700	40

SCHEDULE E

LOCATION STA. TO STA.	40101-0200 SACP 3/8" NMSA 0.3-<3 ESAL,TYPE-VII PVT. SMOOTHNESS (TON)	41301-0400 ASPHALT PAV'T MILLING 1.5" depth (SQYD)
Beech Access Rd. PA	78	353
Horsetrail Parking	126	
SCHEDULE E SUBTOTAL	204	353
AS DIRECTED	21	32
SCHEDULE E TOTAL	225	385

SCHEDULE F

LOCATION STA. TO STA.	40101-0200 SACP 3/8" NMSA 0.3-<3 ESAL,TYPE-VII PVT. SMOOTHNESS (TON)	41301-0400 ASPHALT PAV'T MILLING 1.5" depth (SQYD)
Administrative Parking		
Area at Visitor Center	175	2075
SCHEDULE F SUBTOTAL	175	2,075
AS DIRECTED	20	210
SCHEDULE F TOTAL	195	2,285

U.S. DEPARTMENT OF TRANSPORTATION
FEDERAL HIGHWAY ADMINISTRATION
EASTERN FEDERAL LANDS HIGHWAY DIVISION
STERLING, VIRGINIA

NATCHEZ TRACE PARKWAY

EARTHWORK & PAVING SUMMARY - SCHEDULE C - MP 239.2-242 & SCHEDULES D, E & F

10/4/2007 11:32:38 AM M:\Projects\natr\3d30el2\proj_dev\CADD\schedule.dgn

NPS NO.	REG	STATE	PROJECT	SHEET NO.
604 / 42,994	SE	MS	PRA-NATR 3D30,E12	C-8

BRIDGE PAVING SUMMARY

Bridge No.	MP/Station	Existing Curb Reveal (in)	Milling Depth (in)	Proposed Overlay Depth (in)	Change in Elevation on bridge (in)	Transition Length Past Each Abutment (See Det. E401-A) (ft)	Final Curb Reveal (in)
SCHEDULES A & B - Sections 3D and 3E							
1	239/15+55 to 17+30	5.5	3	2.5	-0.5	25	6
2	241/43+40 to 52+40	6.25	2.25	2.5	0.25	12.5	6
3	243/4+00 to 6+25	6	2.5	2.5	0	0	6
4	247/0+55 to 2+70	6	2.5	2.5	0	0	6
5	247/44+60 to 46+95	5.25	3.25	2.5	-0.75	37.5	6
6	249/5+40 to 7+30	6.25	2.25	2.5	0.25	12.5	6
7	252/33+65 to 39+10	6.25	2.25	2.5	0.25	12.5	6
8	253/5+75 to 9+25	6	2.5	2.5	0	0	6
9	255/13+55 to 15+90	7.5	1	2.5	1.5	75	6
10	257/43+55 to 48+00	5.5	3	2.5	-0.5	25	6
11	258/14+20 to 18+40	5	3.5	2.5	-1	50	6
12	258/34+50 to 38+80	5.25	3.25	2.5	-0.75	37.5	6
13	259/45+30 to 49+25	6.5	2	2.5	0.5	25	6
14	260/40+30 to 45+00	6	2.5	2.5	0	0	6
15	261/27+30 to 29+70	6	2.5	2.5	0	0	6
16	262/10+15 to 13+85	6.25	2.25	2.5	0.25	12.5	6
17	262/23+10 to 28+35	5.5	3	2.5	-0.5	25	6
18	263/16+80 to 20+65	5.5	3	2.5	-0.5	25	6
19	263/38+40 to 44+70	9.5	0	2.5	2.5	125	7
20	264/18+80 to 23+80	5.25	3.25	2.5	-0.75	37.5	6
21	264/41+50 to 45+55	6	2.5	2.5	0	0	6
22	265/39+45 to 41+85	6.25	2.25	2.5	0.25	12.5	6

U.S. DEPARTMENT OF TRANSPORTATION
FEDERAL HIGHWAY ADMINISTRATION
EASTERN FEDERAL LANDS HIGHWAY DIVISION
STERLING, VIRGINIA

NATCHEZ TRACE PARKWAY

BRIDGE PAVING SUMMARY

8/27/2007 3:08:44 PM M:\Projects\natr\3d30,el2\proj_dev\CADD\schedule.dgn

NPS NO.	REG	STATE	PROJECT	SHEET NO.
604 / 42,994	SE	MS	PRA-NATR 3D30,E12	C-9

LOCATION STA.	TO	STA.	SIDE LT	C	RT	63401-1500 Pavement markings, Type H, solid (LNFT)	63401-1500 Pav't markings, Type H, solid (durable pav't markings) (LNFT)	63401-1600 Pavement markings, Type H, broken (LNFT)	63405-3250 Pav't markings, Type H, accessibility symbol (EACH)	63406-0200 Raised pavement markers, type B (EACH)	REMARKS
MP 252											
00+00	to	00+40	X	X	X	80		80			SBY centerline, SDW(Lt.) edgeline, SSW edgelines
00+40	to	31+65	X	X	X	6250		3125			SBY centerline, SSW edgelines
County Rd. intersection										4	2 raised markers on each side of the Pkwy
31+65	to	35+15	X	X	X		700	350			SBY centerline, SSW edgelines
35+15	to	38+10	X	X	X	590		295			SBY centerline, SSW edgelines
38+10	to	41+60	X	X	X		700	350			SBY centerline, SSW edgelines
41+60	to	52+80	X	X	X	2240		1120			SBY centerline, SSW edgelines
Private/Public Rd. intersection										4	2 raised markers on each side of the Pkwy
MP 253											
00+00	to	02+40	X	X	X	480		240			SBY centerline, SSW edgelines
02+40	to	05+90	X	X	X		700	350			SBY centerline, SSW edgelines
05+90	to	07+15	X	X	X	250		125			SBY centerline, SSW edgelines
07+15	to	10+65	X	X	X		700	350			SBY centerline, SSW edgelines
10+65	to	24+65	X	X	X	2800		1400			SBY centerline, SSW edgelines
24+65	to	30+55	X	X	X	1770		590			SBY(Lt) & SSY(Rt.) centerline, SSW edgelines
Priceson Crossing (intersect.)			X		X	66				4	two 12" SW stop bars, 4 raised markers, at Priceson Crossing
31+00	to	37+15	X	X	X	1845		615			SSY(Lt) & SBY(Rt.) centerline, SSW edgelines
37+15	to	52+80	X	X	X	3130		1565			SBY centerline, SSW edgelines
MP 254											
00+00	to	16+00	X	X	X	3200		1600			SBY centerline, SSW edgelines
16+00	to	21+50	X	X	X	1650		550			SBY(Lt) & SSY(Rt.) centerline, SSW edgelines
Padcy Crossing (intersection)						60				4	two 12" SW stop bars, 4 raised markers, at Padcy Crossing
21+90	to	27+10	X	X	X	1560		520			SSY(Lt) & SBY(Rt.) centerline, SSW edgelines
27+10	to	52+80	X	X	X	5140		2570			SBY centerline, SSW edgelines
MP 255											
00+00	to	04+65	X	X	X	1395		465			SBY(Lt) & SSY(Rt.) centerline, SSW edgelines
Ramp to Palmetto Rd.						1878				4	12" SW stop bar & 4 raised markers, at Pkwy, DSY centerline
04+65	to	05+90	X	X	X	500					DSY centerline, SSW edgelines
06+25	to	07+30	X	X	X	420					DSY centerline, SSW edgelines
07+30	to	07+70	X	X	X	160					DSY centerline, SSW(Rt.) edgeline
07+70	to	09+70	X	X	X	800		200			DSY centerline, SDW(Lt.) edgeline, SSW edgelines
09+70	to	10+25	X	X	X	220					DSY centerline, SSW edgelines
10+25	to	13+75	X	X	X	700	700				DSY centerline, SSW edgelines
13+75	to	16+05	X	X	X	920					DSY centerline, SSW edgelines
16+05	to	19+55	X	X	X	350	700	350			SSY(Lt) & SBY(Rt.) centerline, SSW edgelines
19+55	to	24+60	X	X	X	1515		505			SSY(Lt) & SBY(Rt.) centerline, SSW edgelines
24+60	to	52+80	X	X	X	5640		2820			SBY centerline, SSW edgelines
MP 256											
00+00	to	05+00	X	X	X	1000		500			SBY centerline, SSW edgelines
MP 257											
30+00	to	40+20	X	X	X	2040		1020			SBY centerline, SSW edgelines
40+20	to	43+70	X	X	X		700	350			SBY centerline, SSW edgelines
43+70	to	45+40	X	X	X	340		170			SBY centerline, SSW edgelines
45+40	to	48+90	X	X	X		700	350			SBY centerline, SSW edgelines
48+90	to	52+80	X	X	X	780		390			SBY centerline, SSW edgelines
MP 258											
00+00	to	11+90	X	X	X	2380		1190			SBY centerline, SSW edgelines
11+90	to	15+40	X	X	X		700	350			SBY centerline, SSW edgelines
15+40	to	16+70	X	X	X	260		130			SBY centerline, SSW edgelines
16+70	to	20+20	X	X	X		700	350			SBY centerline, SSW edgelines
20+20	to	26+00	X	X	X	1160		580			SBY centerline, SSW edgelines
26+00	to	28+00	X	X	X	600		200			SBY(Lt) & SSY(Rt.) centerline, SSW edgelines
28+00	to	28+95	X	X	X	285		190			SBY(Lt) & SSY(Rt.) centerline, SSW(Lt.) & SDW(Rt.) edgelines
28+95	to	29+55	X	X	X	180		60			SBY(Lt) & SSY(Rt.) centerline, SSW(Lt.) edgeline
29+55	to	30+95	X	X	X	420		140			SBY(Lt) & SSY(Rt.) centerline, SSW edgelines
Ramp to Cliff Gookin Blvd.(EB)						1678				4	12" SW stop bar & 4 raised markers, at Pkwy, DSY centerline
31+45	to	32+40	X	X	X	380					DSY centerline, SSW edgelines
32+40	to	35+90	X	X	X	700	700				DSY centerline, SSW edgelines
35+90	to	37+40	X	X	X	600					DSY centerline, SSW edgelines
37+40	to	40+90	X	X	X	700	700				DSY centerline, SSW edgelines
SCHEDULE A SHEET SUBTOTAL						**59112**	**8400**	**26105**	**0**	**24**	

DSY = Double solid yellow
SBY = Single broken yellow
SSY = Single solid yellow
SSW = Single solid white
SBW = Single broken white
SDW = Single dotted white
SW = Solid white

U.S. DEPARTMENT OF TRANSPORTATION
FEDERAL HIGHWAY ADMINISTRATION
EASTERN FEDERAL LANDS HIGHWAY DIVISION
STERLING, VIRGINIA

NATCHEZ TRACE PARKWAY

PERMANENT PAVEMENT MARKING SUMMARY SCHEDULE A

8/27/2007 3:08:15 PM M:\Projects\natr\3d30,el2\proj_dev\CADD\schedule.dgn

NPS NO.	REG	STATE	PROJECT	SHEET NO.
604 / 42,994	SE	MS	PRA-NATR 3D30,E12	C-10

LOCATION STA.	TO	STA.	SIDE LT	C	RT	63401-1500 Pavement markings, Type H, solid (LNFT)	63401-1500 Pav't markings, Type H, solid (durable pav't markings) (LNFT)	63401-1600 Pavement markings, Type H, broken (LNFT)	63405-3250 Pav't markings, Type H, accessibility symbol (EACH)	63406-0200 Raised pavement markers, type B (EACH)	REMARKS
MP 258											
40+90	to	42+75	X	X	X	740					DSY centerline, SSW edgelines
Ramp to Cliff Gookin Blvd.(EB)						1728				4	12" SW stop bar & 4 raised markers, at Pkwy, DSY centerline
43+30	to	45+30	X	X	X	600		200			SSY(Lt) & SBY(Rt.) centerline, SSW edgelines
45+30	to	45+85		X	X	165		55			SSY(Lt) & SBY(Rt.) centerline, SSW(Rt.) edgeline
45+85	to	47+30	X	X	X	435		290			SSY(Lt) & SBY(Rt.) centerline, SDW(Lt.) & SSW(Rt.) edgelines
47+30	to	48+80	X	X	X	450		150			SSY(Lt) & SBY(Rt.) centerline, SSW edgelines
48+80	to	52+80	X	X	X	800		400			SBY centerline, SSW edgelines
MP 259											
00+00	to	10+90	X	X	X	2180		1090			SBY centerline, SSW edgelines
Danises Crossing (intersection)						120				4	two 12" SW stop bars, 4 raised markers, at Danises Crossing
10+90	to	36+65	X	X	X	5150		2575			SBY centerline, SSW edgelines
36+65	to	39+80	X	X	X	945		315			SBY(Lt) & SSY(Rt.) centerline, SSW edgelines
39+80	to	39+95	X	X	X	45		30			SBY(Lt) & SSY(Rt.) centerline, SSW(Lt.) & SDW(Rt.) edgelines
39+95	to	40+35	X	X	X	120		80			SBY(Lt) & SSY(Rt.) centerline, SSW(Lt.) edgeline
40+35	to	42+15	X	X	X	540		180			SBY(Lt) & SSY(Rt.) centerline, SSW edgelines
Ramp to MS Hwy 6 (EB)						3066				4	12" SW stop bar & 4 raised markers, at Pkwy, DSY centerline
42+55	to	44+15	X	X	X	640					DSY centerline, SSW edgelines
44+15	to	47+65	X	X	X	700	700				DSY centerline, SSW edgelines
47+65	to	49+00	X	X	X	540					DSY centerline, SSW edgelines
49+00	to	52+50	X	X	X	700	700				DSY centerline, SSW edgelines
52+50	to	52+80	X	X	X	120					DSY centerline, SSW edgelines
MP 260											
00+00	to	00+55	X	X	X	220					DSY centerline, SSW edgelines
Ramp to MS Hwy 6 (WB)						2426				4	12" SW stop bar & 4 raised markers, at Pkwy, DSY centerline
01+05	to	03+30	X	X	X	675		225			SSY(Lt) & SBY(Rt.) centerline, SSW edgelines
03+30	to	03+80		X	X	100		50			SSY(Lt) & SBY(Rt.) centerline, SSW(Rt.) edgeline
03+80	to	04+15	X	X	X	70		70			SSY(Lt) & SBY(Rt.) centerline, SDW(Lt.) & SSW(Rt.) edgelines
04+15	to	06+45	X	X	X	690		230			SSY(Lt) & SBY(Rt.) centerline, SSW edgelines
06+45	to	32+55	X	X	X	5220		2610			SBY centerline, SSW edgelines
32+55	to	41+40	X	X	X	2655		885			SBY(Lt) & SSY(Rt.) centerline, SSW edgelines
38+95	to	41+40	X	X	X	245	490	245			SBY(Lt) & SSY(Rt.) centerline, SSW edgelines
41+40	to	42+45	X	X	X	210	210				DSY centerline, SSW edgelines
42+45	to	43+85	X	X	X	560					DSY centerline, SSW edgelines
43+85	to	45+85	X	X	X	400	400				DSY centerline, SSW edgelines
45+85	to	47+35	X	X	X	150	300	150			SSY(Lt) & SBY(Rt.) centerline, SSW edgelines
47+35	to	52+80	X	X	X	1635		545			SSY(Lt) & SBY(Rt.) centerline, SSW edgelines
MP 261											
00+00	to	02+75	X	X	X	825		275			SSY(Lt) & SBY(Rt.) centerline, SSW edgelines
02+75	to	22+10	X	X	X	3870		1935			SBY centerline, SSW edgelines
22+10	to	28+60	X	X	X	1950		650			SBY(Lt) & SSY(Rt.) centerline, SSW edgelines
28+60	to	31+80	X	X	X	640		320			SBY centerline, SSW edgelines
31+80	to	37+60	X	X	X	1740		580			SSY(Lt) & SBY(Rt.) centerline, SSW edgelines
37+60	to	39+90	X	X	X	460		230			SBY centerline, SSW edgelines
39+90	to	41+40	X	X	X	300		300			SBY centerline, SDW(Lt.) & SSW(Rt.) edgelines
Chickasaw Village Access Rd.						2514			1	2	2 raised markers at Pkwy
41+40	to	42+55		X	X	115		115			SBY centerline, SSW(Rt.) edgeline
42+55	to	46+15	X	X	X	720		720			SBY centerline, SDW(Lt.) & SSW(Rt.) edgelines
46+15	to	52+80	X	X	X	1330		665			SBY centerline, SSW edgelines
MP 262											
00+00	to	01+65	X	X	X	330		165			SBY centerline, SSW edgelines
01+65	to	05+15	X	X	X		700	350			SBY centerline, SSW edgelines
05+15	to	06+35	X	X	X	240		120			SBY centerline, SSW edgelines
06+35	to	11+20	X	X	X		970	485			SBY centerline, SSW edgelines
11+20	to	12+90	X	X	X	680					DSY centerline, SSW edgelines
12+90	to	14+35	X	X	X	290	290				DSY centerline, SSW edgelines
14+35	to	15+95	X	X	X	320	320	160			DSY centerline, SDW(Rt.) & SSW(Lt.) edgelines
15+95	to	16+40	X	X		90	90				DSY centerline, SSW(Lt.) edgeline
16+40	to	18+05	X	X	X	660					DSY centerline, SSW edgelines
Ramp to McCullough Blvd. (EB)						2308				4	12" SW stop bar & 4 raised markers, at Pkwy, DSY centerline
SCHEDULE A SHEET SUBTOTAL						**54422**	**5170**	**17445**	**1**	**22**	

DSY = Double solid yellow
SBY = Single broken yellow
SSY = Single solid yellow
SSW = Single solid white
SBW = Single broken white
SDW = Single dotted white
SW = Solid white

U.S. DEPARTMENT OF TRANSPORTATION
FEDERAL HIGHWAY ADMINISTRATION
EASTERN FEDERAL LANDS HIGHWAY DIVISION
STERLING, VIRGINIA

NATCHEZ TRACE PARKWAY

PERMANENT PAVEMENT MARKING SUMMARY SCHEDULE A

8/27/2007 3:10:04 PM M:\Projects\natr\3d30,e12\proj_dev\CADD\schedule.dgn

NPS NO.	REG	STATE	PROJECT	SHEET NO.
604 / 42,994	SE	MS	PRA-NATR 3D30,E12	C-11

LOCATION STA.	TO	STA.	SIDE LT	C	RT	63401-1500 Pavement markings, Type H, solid (LNFT)	63401-1500 Pav't markings, Type H, solid (durable pav't markings) (LNFT)	63401-1600 Pavement markings, Type H, broken (LNFT)	63405-3250 Pav't markings, Type H, accessibility symbol (EACH)	63406-0200 Raised pavement markers, type B (EACH)	REMARKS
MP 262											
18+60	to	21+85	X	X	X	1300					DSY centerline, SSW edgelines
21+85	to	25+35	X	X	X	700	700				DSY centerline, SSW(Lt.) edgeline
25+35	to	26+85	X	X	X	600					DSY centerline, SSW edgelines
26+85	to	30+35	X	X		700	700				DSY centerline, SSW(Lt.) edgeline
30+35	to	32+10	X	X	X	700					DSY centerline, SSW edgelines
Ramp to McCullough Blvd. (WB)						2608				4	12" SW stop bar & 4 raised markers, at Pkwy, DSY centerline
32+50	to	34+20	X	X	X	510		170			SSY(Lt) & SBY(Rt.) centerline, SSW edgelines
34+20	to	34+75		X	X	165		55			SSY(Lt) & SBY(Rt.) centerline, SSW(Rt.) edgeline
34+75	to	35+70	X	X	X	190		190			SSY(Lt.) & SBY (Rt.) centerline, SDW(Lt.) & SSW(Rt.) edgelines
35+70	to	37+90	X	X	X	660		220			SSY(Lt) & SBY(Rt.) centerline, SSW edgelines
37+90	to	52+80	X	X	X	2980		1490			SBY centerline, SSW edgelines
MP 263											
00+00	to	09+80	X	X	X	1960		980			SBY centerline, SSW edgelines
09+80	to	14+45	X	X	X	1395		465			SBY(Lt) & SSY(Rt.) centerline, SSW edgelines
14+45	to	17+95	X	X	X	350	700	350			SBY(Lt) & SSY(Rt.) centerline, SSW edgelines
17+95	to	19+00	X	X	X	420					DSY centerline, SSW edgelines
19+00	to	22+50	X	X	X	700	700				DSY centerline, SSW edgelines
22+50	to	24+20	X	X	X	680					DSY centerline, SSW edgelines
24+20	to	29+15	X	X	X	2970					DSY centerline, SSW edgelines, begin pav't widening & center-line gore striping (See DET. E634-4)
29+15	to	31+80	X	X	X	2391		265			DSY C/L, SSW(Lt.) & SDW(Rt.) edgelines, cont. pav't widening (widens to 12' at 30+00+/-) & C/L gore striping (See DET. E634-4)
31+80	to	32+25	X	X	X	432					DSY centerline, SSW(Lt.) edgeline, continue pav't widening & 12' wide centerline gore striping (See DET. E634-4)
32+25	to	34+75	X	X	X	2900					DSY C/L, SSW edgelines, cont. pav't widen. & 12' wide C/L gore stripe (See DET. E634-4), 8" wide SSW(Rt.) right-turn lane
Ramp to MS Hwy 78 (EB)						2492					12" SW stop bar at Pkwy, DSY centerline
35+70	to	36+65	X	X	X	380	190				DSY centerline, SSW edgelines, 8" wide SSW(Lt) left-turn lane
36+65	to	37+70	X	X	X	399	210				DSY centerline, SSW edgelines, begin gore pav't widening from 0' wide at 36+65 to 12' wide at 37+70 (See DET. E634-4)
37+70	to	39+40	X	X	X	1292	340				DSY centerline, SSW edgelines, continue pav't widening & 12' wide centerline gore striping (See DET. E634-4)
39+40	to	43+20	X	X	X	3648					DSY centerline, SSW edgelines, continue pav't widening & 12' wide centerline gore striping (See DET. E634-4)
43+20	to	46+25	X	X	X	2318	610				DSY centerline, SSW edgelines, continue pav't widening & 12' wide centerline gore striping (See DET. E634-4)
46+25	to	47+25	X	X	X	760	200	100			DSY centerline, SSW edgelines, cont. pav't widen. & 12" wide C/L gore striping (See DET. E634-4), SDW(Rt) edgeline
47+25	to	48+25	X	X	X	589		100			DSY C/L, SSW edgelines, end gore pav't widen. from 12' wide at 47+25 to 0' wide at 48+25 (See DET. E634-4), SDW(Rt.) edgeline
48+25	to	49+00	X	X	X	450		75			DSY C/L, SSW edgelines, 8" wide SSW(Rt) left-turn lane, SDW(Lt.) edgeline
49+00	to	50+90	X	X	X	1140		190			DSY C/L, SSW edgelines, 8" wide SSW(Rt) left-turn lane, SDW(Lt.) edgeline
Ramp to MS Hwy 78 (WB)						1956					12" SW stop bar at Pkwy, DSY centerline
Old Town parking & access Rd.						1551			1	2	12" SW stop bar & 2 raised markers, at Pkwy, DSY centerline
51+65	to	52+40	X	X	X	450		75			DSY C/L, SSW edgelines, 8" wide SSW(Lt) left-turn lane, SDW(Lt.) edgeline
52+40	to	52+70	X	X	X	120		30			DSY C/L, SSW edgelines, & SDW(Lt) edgeline
52+70	to	53+75	X	X	X	819		105			DSY C/L, SSW edgelines, & SDW(Lt) edgeline, begin gore pav't striping from 0' wide to 12' wide (See DET. E634-4)
MP 264											
00+00	to	08+05	X	X	X	6279					DSY C/L, SSW edgelines, transition gore pav't striping from 12' to 0' wide (See DET. E634-4)
08+05	to	11+00	X	X	X	885		295			SSY(Lt) & SBY(Rt.) centerline, SSW edgelines
11+00	to	15+00	X	X	X	800		400			SBY centerline, SSW edgelines
15+00	to	18+50	X	X	X		700	350			SBY centerline, SSW edgelines
18+50	to	21+20	X	X	X	540		270			SBY centerline, SSW edgelines
21+20	to	24+70	X	X	X		700	350			SBY centerline, SSW edgelines
24+70	to	37+70	X	X	X	2600		1300			SBY centerline, SSW edgelines
SCHEDULE A SHEET SUBTOTAL						**54779**	**5750**	**7825**	**1**	**6**	

DSY = Double solid yellow
SBY = Single broken yellow
SSY = Single solid yellow
SSW = Single solid white
SBW = Single broken white
SDW = Single dotted white
SW = Solid white

U.S. DEPARTMENT OF TRANSPORTATION
FEDERAL HIGHWAY ADMINISTRATION
EASTERN FEDERAL LANDS HIGHWAY DIVISION
STERLING, VIRGINIA

NATCHEZ TRACE PARKWAY

PERMANENT PAVEMENT MARKING SUMMARY SCHEDULE A

8/27/2007 3:09:38 PM M:\Projects\natr\3d30,e12\proj_dev\CADD\schedule.dgn

NPS NO.	REG	STATE	PROJECT	SHEET NO.
604 / 42,994	SE	MS	PRA-NATR 3D30,E12	C-12

LOCATION STA.	TO	STA.	SIDE LT	C	RT	63401-1500 Pavement markings, Type H, solid (LNFT)	63401-1500 Pav't markings, Type H, solid (durable pav't markings) (LNFT)	63401-1600 Pavement markings, Type H, broken (LNFT)	63405-3250 Pav't markings, Type H, accessibility symbol (EACH)	63406-0200 Raised pavement markers, type B (EACH)	REMARKS
MP 264											
37+70	to	41+20	X	X	X		700	350			SBY centerline, SSW edgelines
41+20	to	42+55	X	X	X	270		135			SBY centerline, SSW edgelines
42+55	to	46+05	X	X	X		700	350			SBY centerline, SSW edgelines
46+05	to	52+80	X	X	X	1350		675			SBY centerline, SSW edgelines
MP 265											
00+00	to	26+80	X	X	X	5360		2680			SBY centerline, SSW edgelines
26+80	to	35+90	X	X	X	2730		910			SBY(Lt) & SSY(Rt.) centerline, SSW edgelines
35+90	to	36+60	X	X	X	280					DSY centerline, SSW edgelines
36+60	to	40+10	X	X	X	700	700				DSY centerline, SSW edgelines
40+10	to	41+40	X	X	X	520					DSY centerline, SSW edgelines
41+40	to	43+00	X	X	X	320	320				DSY centerline, SSW edgelines
43+00	to	44+90	X	X	X	874	380				DSY C/L, SSW edgelines, begin pav't widening (rt. & lt.) for extra lanes, C/L gore stripe from 0' wide to 3' wide (See DET. E634-4)
44+90	to	46+65	X	X	X	1260					DSY C/L, SSW edgelines, end pav't widen. (rt) for an extra 11' lane, C/L gore stripe from 3' to 5' wide (See DET. E634-4)
46+65	to	48+90	X	X	X	1890		225			DSY C/L, SSW edgelines, SBW(Rt.) lane stripe, end pav't widen. Lt. (11' lane), C/L gore stripe 5'-11' wide (See DET. E634-4)
48+90	to	49+95	X	X	X	420		210			DSY C/L, SSW edgelines, SBW(Rt. & Lt.) lane stripes
49+95	to	51+10	X	X	X	345		345			DSY C/L, SSW(Lt.) & SDW(Rt.) edgelines, SBW(Rt.& Lt.) lane str.
51+10	to	52+40	X	X	X	520		260			DSY C/L, SSW edgelines, SBW(Rt. & Lt.) lane stripes
Tupelo HQs Visitor Ctr. Parking						1578			2	14	12" SW stop bar & 14 raised markers, at Pkwy, DSY centerline
MP 266											
00+00	to	06+95	X	X	X	2780		1390			DSY C/L, SSW edgelines, SBW(Rt. & Lt.) lane stripes,
06+95	to	11+80	X	X	X	1940					DSY centerline, SSW edgelines, end pav't widening
SCHEDULE A SUBTOTAL						**23137**	**2800**	**7530**	**2**	**14**	
SUBTOTALS FROM PREVIOUS SHEETS						**168313**	**19320**	**51375**	**2**	**52**	
AS DIRECTED						**8550**	**1680**	**5095**	**0**	**0**	
SCHEDULE A TOTAL						**200000**	**23800**	**64000**	**4**	**66**	

DSY = Double solid yellow
SBY = Single broken yellow
SSY = Single solid yellow
SSW = Single solid white
SBW = Single broken white
SDW = Single dotted white
SW = Solid white

U.S. DEPARTMENT OF TRANSPORTATION
FEDERAL HIGHWAY ADMINISTRATION
EASTERN FEDERAL LANDS HIGHWAY DIVISION
STERLING, VIRGINIA

NATCHEZ TRACE PARKWAY

PERMANENT PAVEMENT MARKING SUMMARY SCHEDULE A

8/27/2007 3:09:02 PM M:\Projects\natr\3d30,el2\proj_dev\CADD\schedule.dgn

NPS NO.	REG	STATE	PROJECT	SHEET NO.
604 / 42,994	SE	MS	PRA-NATR 3D30,E12	C-13

LOCATION STA.	TO	STA.	SIDE LT	C	RT	63401-1500 Pavement markings, Type H, solid (LNFT)	63401-1500 Pav't markings, Type H, solid (durable pav't markings) (LNFT)	63401-1600 Pavement markings, Type H, broken (LNFT)	63406-3250 Pav't markings, Type H, accessibility symbol (EACH)	63406-0200 Raised pavement markers, type B (EACH)	REMARKS
MP 243											
00+00	to	01+35	X	X	X		270	135			SBY centerline, SSW edgelines
01+35	to	02+70	X	X	X	135	270	135			SBY(Lt) & SSY(Rt.) centerline, SSW edgelines
02+70	to	03+85	X	X	X	345		115			SBY(Lt) & SSY(Rt.) centerline, SSW edgelines
03+85	to	06+80	X	X	X	295	590	295			SBY(Lt) & SSY(Rt.) centerline, SSW edgelines
06+80	to	07+35	X		X		55				SSW(Rt.) edgeline
Ramp to Davis Rd.						1044				4	12" SW stop bar & 4 raised markers, at Pkwy, DSY centerline
07+35	to	10+20	X	X	X	855		285			SSY(Lt) & SBY(Rt.) centerline, SSW edgelines
10+20	to	10+85		X	X	130		65			SSY(Lt) & SBY(Rt.) centerline, SSW(Rt.) edgeline
10+85	to	12+30	X	X	X	435		290			SSY(Lt) & SBY(Rt.) centerline, SDW(Lt.) & SSW edgelines
12+30	to	15+25	X	X	X	590		295			SBY centerline, SSW edgelines
15+25	to	16+00		X	X	75		75			SBY centerline, SSW(Rt.) edgeline
16+00	to	18+20	X	X	X	440		220			SBY centerline, SSW edgelines
Hernando Desoto Parking						180				4	10 stall lines, 18' long each, 4 raised markers at entr. & exit
18+20	to	18+95	X	X	X	150		75			SBY centerline, SSW(Rt.) edgeline
18+95	to	20+95	X	X	X	400		400			SBY centerline, SDW(Lt.) & SSW edgelines
20+95	to	21+80	X	X	X	170		85			SBY centerline, SSW edgelines
21+80	to	52+80	X	X	X	6200		3100			SBY centerline, SSW edgelines
MP 244											
00+00	to	52+80	X	X	X	10560		5280			SBY centerline, SSW edgelines
MP 245											
00+00	to	29+55	X	X	X	5910		2955			SBY centerline, SSW edgelines
29+55	to	30+35	X	X	X	80		160			SBY centerline, SSW(Lt.) & SDW(Rt.) edgelines
30+35	to	30+90	X	X	X	55		55			SBY centerline, SSW(Lt.) edgeline
30+90	to	32+05	X	X	X	230		115			SBY centerline, SSW edgelines
Monroe Mission Parking										4	2 raised markers at PA entrance & 2 at PA exit
32+05	to	32+90	X	X	X	85		85			SBY centerline, SSW(Lt.) edgeline
32+90	to	41+75	X	X	X	1770		885			SBY centerline, SSW edgelines
41+75	to	45+25	X	X	X		700	350			SBY centerline, SSW edgelines
45+25	to	46+40	X	X	X	230		115			SBY centerline, SSW edgelines
46+40	to	49+90	X	X	X		700	350			SBY centerline, SSW edgelines
49+90	to	52+80	X	X	X	580		290			SBY centerline, SSW edgelines
MP 246											
00+00	to	40+70	X	X	X	8140		4070			SBY centerline, SSW edgelines
40+70	to	42+10	X	X	X	280		140			SBY(Lt) & SSY(Rt.) centerline, SSW edgelines
42+10	to	43+35	X	X	X	250		250			SBY(Lt) & SSY(Rt.) centerline, SSW(Lt.) & SDW(Rt.) edgelines
43+35	to	43+80	X	X	X	135		45			SBY(Lt) & SSY(Rt.) centerline, SSW(Lt.) edgeline
43+80	to	46+20	X	X	X	720		240			SBY(Lt) & SSY(Rt.) centerline, SSW edgelines
46+20	to	46+50	X			30					SSW(Lt.) edgeline
Ramp to MS Hwy 41					X	922				4	12" SW stop bar & 4 raised markers, at Pkwy, DSY centerline
46+50	to	48+40	X	X	X	760					DSY centerline, SSW edgelines
48+40	to	51+90	X	X	X	700	700				DSY centerline, SSW edgelines
51+90	to	52+80	X	X	X	360					DSY centerline, SSW edgelines
MP 247											
00+00	to	00+70	X	X	X	280					DSY centerline, SSW edgelines
00+70	to	01+20	X	X	X	100	100				DSY centerline, SSW edgelines
01+20	to	04+20	X	X	X	300	600	300			SSY(Lt) & SBY(Rt.) centerline, SSW edgelines
04+20	to	04+80	X	X	X	180		60			SSY(Lt) & SBY(Rt.) centerline, SSW edgelines
04+80	to	40+05	X	X	X	7050		3525			SBY centerline, SSW edgelines
40+05	to	43+55	X	X	X		700	350			SBY centerline, SSW edgelines
43+55	to	45+35	X	X	X	540		180			SBY(Lt) & SSY(Rt.) centerline, SSW edgelines
45+35	to	51+25	X	X	X	590	1180	590			SBY(Lt) & SSY(Rt.) centerline, SSW edgelines
51+25	to	51+60	X	X	X	35	70	35			SSY(Lt) & SBY(Rt.) centerline, SSW edgelines
51+60	to	52+80	X	X	X	240		120			SSY(Lt) & SBY(Rt.) centerline, SSW edgelines
MP 248											
00+00	to	03+50	X	X	X	350	700	350			SSY(Lt) & SBY(Rt.) centerline, SSW edgelines
03+50	to	05+55	X	X	X	615		205			SSY(Lt) & SBY(Rt.) centerline, SSW edgelines
05+55	to	46+95	X	X	X	8280		4140			SBY centerline, SSW edgelines
46+95	to	52+80	X	X	X	1755		585			SBY(Lt) & SSY(Rt.) centerline, SSW edgelines
MP 249											
00+00	to	01+00	X	X	X	300		100			SBY(Lt) & SSY(Rt.) centerline, SSW edgelines
SCHEDULE B SUBTOTAL						**63856**	**6635**	**31495**	**0**	**16**	

DSY = Double solid yellow
SBY = Single broken yellow
SSY = Single solid yellow
SSW = Single solid white
SBW = Single broken white
SDW = Single dotted white
SW = Solid white

U.S. DEPARTMENT OF TRANSPORTATION
FEDERAL HIGHWAY ADMINISTRATION
EASTERN FEDERAL LANDS HIGHWAY DIVISION
STERLING, VIRGINIA

NATCHEZ TRACE PARKWAY

PERMANENT PAVEMENT MARKING SUMMARY SCHEDULE B

8/20/2007 1:59:52 PM M:\Projects\natr\3d30el2\proj_dev\CADD\schedule.dgn

NPS NO.	REG	STATE	PROJECT	SHEET NO.
604 / 42,994	SE	MS	PRA-NATR 3D30,E12	C-14

LOCATION STA.	TO	STA.	SIDE LT	C	RT	63401-1500 Pavement markings, Type H, solid (LNFT)	63401-1500 Pav't markings, Type H, solid (durable pav't markings) (LNFT)	63401-1600 Pavement markings, Type H, broken (LNFT)	63405-3250 Pav't markings, Type H, accessibility symbol (EACH)	63406-0200 Raised pavement markers, type B (EACH)	REMARKS
Natchez Trace Parkway											
MP 249											
01+00	to	02+80	X	X	X	180	360	180			SBY(Lt) & SSY(Rt.) centerline, SSW edgelines
02+80	to	04+50	X	X	X		340	170			SBY centerline, SSW edgelines
04+50	to	06+10	X	X	X	320		160			SBY centerline, SSW edgelines
06+10	to	09+60	X	X	X	350	700	350			SSY(Lt) & SBY(Rt.) centerline, SSW edgelines
09+60	to	12+45	X	X	X	855		285			SSY(Lt) & SBY(Rt.) centerline, SSW edgelines
12+45	to	31+40	X	X	X	3790		1895			SBY centerline, SSW edgelines
Tockshish Parking Area										4	2 raised markers at PA entrance & 2 at PA exit
31+40	to	32+05		X	X	65		65			SBY centerline, SSW(Rt.) edgeline
32+05	to	33+95	X	X	X	380		190			SBY centerline, SSW edgelines
33+95	to	34+40		X	X	45		45			SBY centerline, SSW(Rt.) edgeline
34+40	to	36+05	X	X	X	330		330			SBY centerline, SDW(Lt.) edgeline, SSW edgelines
36+05	to	49+35	X	X	X	2660		1330			SBY centerline, SSW edgelines
49+35	to	52+80	X	X	X		690	345			SBY centerline, SSW edgelines
MP 250											
00+00	to	00+05	X	X	X		10	5			SBY centerline, SSW edgelines
00+05	to	01+35	X	X	X	260		130			SBY centerline, SSW edgelines
01+35	to	04+85	X	X	X		700	350			SBY centerline, SSW edgelines
04+85	to	52+80	X	X	X	9590		4795			SBY centerline, SSW edgelines
MP 251											
00+00	to	02+40	X	X	X	480		240			SBY centerline, SSW edgelines
02+40	to	04+30	X	X	X	380		380			SBY centerline, SDW(Rt.) edgeline, SSW edgelines
Chickasaw Council House PA										4	2 raised markers at PA entrance & 2 at PA exit
04+30	to	04+70	X	X		40		40			SBY centerline, SSW(Lt.) edgeline
04+70	to	06+60	X	X	X	380		190			SBY centerline, SSW edgelines
06+60	to	07+35	X	X		75		75			SBY centerline, SSW(Lt.) edgeline
07+35	to	24+55	X	X	X	3440		1720			SBY centerline, SSW edgelines
24+55	to	25+65	X	X	X	440					DSY centerline, SSW edgelines
25+65	to	27+85	X	X	X	880		220			DSY centerline, SDW(Rt.) edgeline, SSW edgelines
27+85	to	28+35	X	X	X	200					DSY centerline, SSW(Lt.) edgeline
28+75	to	29+70	X	X	X	380					DSY centerline, SSW edgelines
29+70	to	30+45	X	X	X	150	150				DSY centerline, SSW edgelines
Ramp to Pontocola Rd.						1928				4	12" SW stop bar & 4 raised markers, at Pkwy, DSY centerline
30+70	to	32+15	X	X	X	290	145				DSY centerline, SSW(Lt.) edgeline
32+15	to	33+20	X	X	X	210	210				DSY centerline, SSW edgelines
33+20	to	35+00	X	X	X	720					DSY centerline, SSW edgelines
35+00	to	36+15	X	X	X	230	230				DSY centerline, SSW edgelines
36+15	to	46+65	X	X	X	2100		1050			SBY centerline, SSW edgelines
Black Belt Parking Overlook										4	2 raised markers at PA entrance & 2 at PA exit
46+65	to	47+70		X	X	105	105				SBY centerline, SSW(Rt.) edgeline
47+70	to	50+85	X	X	X	630		315			SBY centerline, SSW edgelines
50+85	to	51+60		X	X	75		75			SBY centerline, SSW(Rt.) edgeline
51+60	to	52+80	X	X	X	240		240			SBY centerline, SDW(Lt.) edgeline, SSW edgelines
SCHEDULE B SUBTOTAL						**32198**	**3640**	**15170**	**0**	**16**	
SUBTOTALS FROM PREVIOUS SHEET						**63856**	**6635**	**31495**	**0**	**16**	
AS DIRECTED						**8946**	**925**	**4335**	**0**	**0**	
SCHEDULE B TOTAL						**105000**	**11200**	**51000**	**0**	**32**	

DSY = Double solid yellow
SBY = Single broken yellow
SSY = Single solid yellow
SSW = Single solid white
SBW = Single broken white
SDW = Single dotted white
SW = Solid white

U.S. DEPARTMENT OF TRANSPORTATION
FEDERAL HIGHWAY ADMINISTRATION
EASTERN FEDERAL LANDS HIGHWAY DIVISION
STERLING, VIRGINIA

NATCHEZ TRACE PARKWAY

PERMANENT PAVEMENT MARKING SUMMARY SCHEDULE B

8/27/2007 3:00:10 PM M:\Projects\natr\3d30e12\proj_dev\CADD\schedule.dgn

NPS NO.	REG	STATE	PROJECT	SHEET NO.
604 / 42,994	SE	MS	PRA-NATR 3D30,EI2	C-15

LOCATION STA.	TO	STA.	SIDE LT	C	RT	63401-1500 Pavement markings, Type H, solid (LNFT)	63401-1500 Pav't markings, Type H, solid (durable pav't markings) (LNFT)	63401-1600 Pavement markings, Type H, broken (LNFT)	63405-3250 Pav't markings, Type H, accessibility symbol (EACH)	63406-0200 Raised pavement markers, type B (EACH)	REMARKS
Natchez Trace Parkway											
MP 239											
Ramp to MS Hwy 32			X			1022				4	12" SW stop bar & 4 raised markers, at Pkwy, DSY centerline
12+50	to	13+45	X	X	X	190	190				DSY centerline, SSW edgelines
13+45	to	13+90		X	X	90	45				DSY centerline, SSW(Rt.) edgeline
13+90	to	14+95	X	X	X	210	105	105			DSY centerline, SSW(Rt.) & SDW(Lt.) edgeline
14+95	to	15+70	X	X	X	150	150				DSY centerline, SSW edgelines
15+70	to	16+95	X	X	X	500					DSY centerline, SSW edgelines
16+95	to	17+45	X	X	X	100	100				DSY centerline, SSW edgelines
17+45	to	20+45	X	X	X	300	600	300			SSY(Lt) & SBY(Rt.) centerline, SSW edgelines
20+45	to	21+90	X	X	X	435		145			SSY(Lt) & SBY(Rt.) centerline, SSW edgelines
Chickasaw Agency PA										4	2 raised markers at PA entrance & 2 at PA exit
21+90	to	49+70	X	X	X	5560		2780			SBY centerline, SSW edgelines
49+70	to	52+80	X	X	X	930		310			SBY(Lt) & SSY(Rt.) centerline, SSW edgelines
MP 240											
00+00	to	05+00	X	X	X	1500		500			SBY(Lt) & SSY(Rt.) centerline, SSW edgelines
05+00	to	15+35	X	X	X	4140					DSY centerline, SSW edgelines
15+35	to	15+70	X		X	52.5					SW stop bars, at driveways, Lt. & Rt.
15+70	to	19+40	X	X	X	1480					DSY centerline, SSW edgelines
Byers Crossing (intersection)										4	2 raised markers on each side of the Pkwy
19+40	to	29+00	X	X	X	2880		960			SSY(Lt) & SBY(Rt.) centerline, SSW edgelines
29+00	to	38+10	X	X	X	1820		910			SBY centerline, SSW edgelines
38+10	to	40+90	X	X	X	840		280			SBY(Lt) & SSY(Rt.) centerline, SSW edgelines
40+90	to	44+40	X	X	X	350	700	350			SBY(Lt) & SSY(Rt.) centerline, SSW edgelines
44+40	to	45+65	X	X	X	375		125			SBY(Lt) & SSY(Rt.) centerline, SSW edgelines
45+65	to	46+10	X	X	X	45	90	45			SBY(Lt) & SSY(Rt.) centerline, SSW edgelines
46+10	to	49+15	X	X	X	610	610				DSY centerline, SSW edgelines
49+15	to	52+80	X	X	X	1460					DSY centerline, SSW edgelines
MP 241											
00+00	to	01+45	X	X	X	580					DSY centerline, SSW edgelines
01+45	to	12+40	X	X	X	3285		1095			SSY(Lt) & SBY(Rt.) centerline, SSW edgelines
12+40	to	20+00	X	X	X	1520		760			SBY centerline, SSW edgelines
20+00	to	20+75		X	X	75		75			SBY centerline, SSW(Rt.) edgeline
20+75	to	22+05	X	X	X	260		130			SBY centerline, SSW edgelines
22+05	to	22+55		X	X	50		50			SBY centerline, SSW(Rt.) edgeline
22+55	to	23+95	X	X	X	280		280			SBY centerline, SDW(Lt.) & SSW edgelines
23+95	to	38+50	X	X	X	2910		1455			SBY centerline, SSW edgelines
38+50	to	42+00	X	X	X		700	350			SBY centerline, SSW edgelines
42+00	to	51+05	X	X	X	1810		905			SBY centerline, SSW edgelines
51+05	to	52+80	X	X	X		350	175			SBY centerline, SSW edgelines
MP 242											
00+00	to	01+75	X	X	X		350	175			SBY centerline, SSW edgelines
01+75	to	52+00	X	X	X	10050		5025			SBY centerline, SSW edgelines
52+00	to	52+80	X	X	X		160	80			SBY centerline, SSW edgelines
SCHEDULE C SUBTOTAL						**45859.5**	**4150**	**17365**	**0**	**12**	
AS DIRECTED						**4140.5**	**50**	**1635**	**0**	**0**	
SCHEDULE C TOTAL						**50000**	**4200**	**19000**	**0**	**12**	

DSY = Double solid yellow
SBY = Single broken yellow
SSY = Single solid yellow
SSW = Single solid white
SBW = Single broken white
SDW = Single dotted white
SW = Solid white

U.S. DEPARTMENT OF TRANSPORTATION
FEDERAL HIGHWAY ADMINISTRATION
EASTERN FEDERAL LANDS HIGHWAY DIVISION
STERLING, VIRGINIA

NATCHEZ TRACE PARKWAY

PERMANENT PAVEMENT MARKING SUMMARY SCHEDULE C

8/20/2007 2:02:17 PM M:\Projects\natr\3d30ei2\proj_dev\CADD\schedule.dgn

NPS NO.	REG	STATE	PROJECT	SHEET NO.
604 / 42,994	SE	MS	PRA-NATR 3D30,E12	C-16

LOCATION STA. TO STA.	SIDE LT	SIDE C	SIDE RT	63401-1500 Pavement markings, Type H, solid (LNFT)	63401-1500 Pav't markings, Type H, solid (durable pav't markings) (LNFT)	63401-1600 Pavement markings, Type H, broken (LNFT)	63405-3250 Pav't markings, Type H, accessibility symbol (EACH)	63406-0200 Raised pavement markers, type B (EACH)	REMARKS
MP 266 Rte. 145 Connector	X	X	X	3356					DSY centerline, 12" stop bar at Hwy 32
SCHEDULE D SUBTOTAL				**3356**	**0**	**0**	**0**	**0**	
AS DIRECTED				**144**	**0**	**0**	**0**	**0**	
SCHEDULE D TOTAL				**3500**	**0**	**0**	**0**	**0**	

LOCATION STA. TO STA.	SIDE LT	SIDE C	SIDE RT	63401-1500 Pavement markings, Type H, solid (LNFT)	63401-1500 Pav't markings, Type H, solid (durable pav't markings) (LNFT)	63401-1600 Pavement markings, Type H, broken (LNFT)	63405-3250 Pav't markings, Type H, accessibility symbol (EACH)	63406-0200 Raised pavement markers, type B (EACH)	REMARKS
MP 266 Administrative Parking Area	X	X	X	380					19 parking stall white stripes, 20 ft long each
SCHEDULE F SUBTOTAL				**380**	**0**	**0**	**0**	**0**	
AS DIRECTED				**0**	**0**	**0**	**0**	**0**	
SCHEDULE F TOTAL				**380**	**0**	**0**	**0**	**0**	

DSY = Double solid yellow
SBY = Single broken yellow
SSY = Single solid yellow
SSW = Single solid white
SBW = Single broken white
SDW = Single dotted white
SW = Solid white

U.S. DEPARTMENT OF TRANSPORTATION
FEDERAL HIGHWAY ADMINISTRATION
EASTERN FEDERAL LANDS HIGHWAY DIVISION
STERLING, VIRGINIA

NATCHEZ TRACE PARKWAY

PERMANENT PAVEMENT MARKING SUMMARY SCHEDULES D & F

8/21/2007 10:08:40 AM M:\Projects\natr\3d30,e12\proj_dev\CADD\schedule.dgn

NPS NO.	REG	STATE	PROJECT	SHEET NO.
604 42,994	SE	MS	PRA-NATR 3D30, E12	C-17

Sign No.	Text No.	Sign Text	LOCATION Station	LOCATION Side	PANEL SIZE Width inch	PANEL SIZE Height inch	PANEL SIZE Area ft²	PANEL SIZE Corner Radii inch	PANEL SIZE Border Width inch	PANEL SIZE Margin Width inch	TEXT SIZE Numbers inch	TEXT SIZE Upper Case inch	TEXT SIZE Lower Case inch	TEXT SIZE Series	Color Combination	Quantity	Total Area ft²	Remarks
1	R1-1		See note 2		36	36	9.00	See note 3							White on Red	9	81.00	Single 2" x 2" weathering steel post Place at all ramps to Parkway
2	R7-8		See note 2		12	18	1.50	See note 3							Green on White w/ Blue on White wheel-chair symbol	2	3.00	Single 2" x 2" weathering steel post Place at Chickasaw Village Parking & Old Town Overlook Parking Areas
3	R7-8b		See note 2		12	6	0.50	See note 3							White on Blue	2	1.00	Place at Chickasaw Village Parking & Old Town Overlook Parking Areas Place on the same post with sign R7-8
4	W8-4		As Directed by the CO		36	36	9.00	See note 3							Black on Yellow	16	144.00	Single 4" x 4" wood post, paint the posts with 2 coats of NPS "Brown" paint Place 1 sign in each direction spaced every 2 miles, as directed by the CO
Object markers (not to be included in sign quantity):																		
	OM-3L		See Remarks		6	18	0.75								Black and Yellow	32	24	Place at end of all parkway wingwalls (16 bridges, 4 wingwalls per bridge)
	OM-3R		See Remarks		6	18	0.75								Black and Yellow	32	24	
															TOTAL	29	229	
															ROUNDED TOTAL	29	230	

NOTES:

1. Sign post supports will not be measured for payment and shall be accordance with Std.633-1.
2. See Parking Area Plans for more information.
3. Construct and erect all signs in accordance with the "Manual on Uniform Traffic Control Devices" (MUTCD), latest edition.

U.S. DEPARTMENT OF TRANSPORTATION
FEDERAL HIGHWAY ADMINISTRATION
EASTERN FEDERAL LANDS HIGHWAY DIVISION
STERLING, VIRGINIA

NATCHEZ TRACE PARKWAY

PERMANENT SIGN SCHEDULE (SCHEDULE A, MP 252-266)

8/30/2007 12:05:03 PM M:\Projects\natr\3d30el2\proj_dev\CADD\ntraff.dgn

NPS NO.	REG	STATE	PROJECT	SHEET NO.
604 / 42,994	SE	MS	PRA-NATR 3D30, E12	C-18

Sign No.	Text No.	Sign Text	LOCATION Station	LOCATION Side	PANEL SIZE Width inch	PANEL SIZE Height inch	PANEL SIZE Area ft^2	PANEL SIZE Corner Radii inch	PANEL SIZE Border Width inch	PANEL SIZE Margin Width inch	TEXT SIZE Numbers inch	TEXT SIZE Upper Case inch	TEXT SIZE Lower Case inch	TEXT SIZE Series	Color Combination	Quantity	Total Area ft^2	Remarks
1	R1-1	STOP	See note 2		36	36	9.00	See note 3							White on Red	3	27.00	Single 2" x 2" weathering steel post Place at all ramps to Parkway
2	W8-4	SOFT SHOULDER	As Directed by the CO		36	36	9.00	See note 3							Black on Yellow	10	90.00	Single 4" x 4" wood post, paint the posts with 2 coats of NPS "Brown" paint Place 1 sign in each direction spaced every 2 miles, as directed by the CO
Object markers (not to be included in sign quantity):																		
	OM-3L		See Remarks		6	18	0.75								Black and Yellow	16	12	Place at end of all parkway wingwalls (8 bridges, 4 wingwalls per bridge)
	OM-3R		See Remarks		6	18	0.75								Black and Yellow	16	12	
															TOTAL	13	117	
															ROUNDED TOTAL	13	117	

NOTES:

1. Sign post supports will not be measured for payment and shall be accordance with Std.633-1.
2. See Parking Area Plans for more information.
3. Construct and erect all signs in accordance with the "Manual on Uniform Traffic Control Devices" (MUTCD), latest edition.

U.S. DEPARTMENT OF TRANSPORTATION
FEDERAL HIGHWAY ADMINISTRATION
EASTERN FEDERAL LANDS HIGHWAY DIVISION
STERLING, VIRGINIA

NATCHEZ TRACE PARKWAY

PERMANENT SIGN SCHEDULE
(SCHEDULE B, MP 243-251)

8/30/2007 12:06:11 PM M:\Projects\natn\3d30e12\proj_dev\CADD\ntraff.dgn

NPS NO.	REG	STATE	PROJECT	SHEET NO.
604 / 42,994	SE	MS	PRA-NATR 3D30, E12	C-19

Sign No.	Text No.	Sign Text	LOCATION Station	LOCATION Side	PANEL SIZE Width inch	PANEL SIZE Height inch	PANEL SIZE Area ft^2	Corner Radii inch	Border Width inch	Margin Width inch	TEXT SIZE Numbers inch	TEXT SIZE Upper Case inch	TEXT SIZE Lower Case inch	TEXT SIZE Series	Color Combination	Quantity	Total Area ft^2	Remarks
1	R1-1		See note 2		36	36	9.00	See note 3							White on Red	1	9.00	Single 2" x 2" weathering steel post Place at all ramps to Parkway
2	W8-4		As Directed by the CO		36	36	9.00	See note 3							Black on Yellow	4	36.00	Single 4" x 4" wood post, paint the posts with 2 coats of NPS "Brown" paint Place 1 sign in each direction spaced every 2 miles, as directed by the CO
Object markers (not to be included in sign quantity):																		
	OM-3L		See Remarks		6	18	0.75								Black and Yellow	6	4.5	Place at end of all parkway wingwalls (3 bridges, 4 wingwalls per bridge)
	OM-3R		See Remarks		6	18	0.75								Black and Yellow	6	4.5	
															TOTAL	5	45	
															ROUNDED TOTAL	5	45	

NOTES:

1. Sign post supports will not be measured for payment and shall be accordance with Std.633-1.
2. See Parking Area Plans for more information.
3. Construct and erect all signs in accordance with the "Manual on Uniform Traffic Control Devices" (MUTCD), latest edition.

U.S. DEPARTMENT OF TRANSPORTATION
FEDERAL HIGHWAY ADMINISTRATION
EASTERN FEDERAL LANDS HIGHWAY DIVISION
STERLING, VIRGINIA

NATCHEZ TRACE PARKWAY

PERMANENT SIGN SCHEDULE (SCHEDULE C, MP 239-242)

9/5/2007 3:59:49 PM M:\Projects\natr\3d30\el2\proj_dev\CADD\intraff.dgn

NPS NO.	REG	STATE	PROJECT	SHEET NO.
604 42,994	SE	MS	PRA-NATR 3D30, E12	C-20

Sign No.	Text No.	Sign Text	LOCATION Station	LOCATION Side	PANEL SIZE Width in	PANEL SIZE Height in	PANEL SIZE Area ft²	PANEL SIZE Corner Radii in	PANEL SIZE Border Width in	PANEL SIZE Margin Width in	TEXT SIZE Numbers in	TEXT SIZE Upper Case in	TEXT SIZE Lower Case in	TEXT SIZE Series	Color Combination	Quantity	Total Area ft²	Remarks
1	G20-2A	END ROAD WORK	See Note 2		48	24	8.00				See Note 3				Black on Orange	4	32.00	Single 4" x 4" post, See Traffic Control Detour & DET. E635-6 & E635-10
2	R4-1	DO NOT PASS	See note 2		36	48	12.00				See note 3				Black on White	19	228.00	Single 4" x 4" wood post Schedule A, Place MP 253: 24+65 Rt, 37+15 Lt, MP 254: 16+00 Rt, 27+10 Lt, MP 255: 0+00 Lt, 24+60 Lt, MP 258: 26+00 Rt, 48+80 Lt, MP 259: 36+65 Rt, MP 260: 32+55 Rt, 6+45 Lt, MP 261: 22+10 Rt, 37+60 Lt, MP 262: 11+20 Rt, 37+90 Lt, MP 263: 9+80 Rt, MP 264: 11+00 Lt, MP 265: 26+80 Rt, MP 266: 11+80 Lt.
3	R4-2	PASS WITH CARE	See note 2		36	48	12.00				See note 3				Black on White	20	240.00	Single 4" x 4" wood post Schedule A, Place MP 252: 0+00 Rt, MP 253: 30+55 Lt, 31+00 Rt, MP 254: 21+50 Lt, 21+90 Rt, MP 255: 4+65 Lt, 16+05 Lt, MP 258: 30+95 Lt, 43+30 Rt, MP 259: 42+15 Lt, MP 260: 1+05 Rt, 41+40 Lt, 45+85 Rt, MP 261: 28+60 Lt/Rt, MP 262: 11+20 Lt, 32+50 Rt, MP 263: 17+95 Lt, MP 264: 8+05 Rt, MP 265: 35+90 Lt.
4	W13-1	45 M.P.H	See Note 2		24	24	4.00				See Note 3				Black on Orange	2	8.00	Use on Parkway, mount with other signs
5	W16-2	500 FEET	See Note 2		24	18	3.00				See Note 3				Black on Orange	2	6.00	Mount with W20-7a sign, See DET. E635-6
6	W20-1	ROAD WORK AHEAD	See Note 2		48	48	16.00				See Note 3				Black on Orange	2	32.00	Double 4" x 4" post, See DET. E635-6 & E635-10
7	W20-4	ONE LANE ROAD AHEAD	See Note 2		48	48	16.00				See Note 3				Black on Orange	2	32.00	Double 4" x 4" post, See DET. E635-6
8	W20-7a		See Note 2		48	48	16.00				See Note 3				Black on Orange	2	32.00	Double 4" x 4" post, See DET. E635-6
															Subtotal	53	610.00	

NOTES:

1. Sign post supports will not be measured for payment and shall be accordance with Std.635-1.
2. See Traffic Control Plans for sign locations. Actual location of the signs will be directed by the CO.
3. Construct and erect all signs in accordance with the "Manual on Uniform Traffic Control Devices" (MUTCD), latest edition.

U.S. DEPARTMENT OF TRANSPORTATION
FEDERAL HIGHWAY ADMINISTRATION
EASTERN FEDERAL LANDS HIGHWAY DIVISION
STERLING, VIRGINIA

NATCHEZ TRACE PARKWAY

CONSTRUCTION SIGN SUMMARY - SCHEDULE A

8/21/2007 11:49:03 AM M:\Projects\natr\3d30al2\proj_dev\CADD\ntraff.dgn

NPS NO.	REG	STATE	PROJECT	SHEET NO.
604 42,994	SE	MS	PRA-NATR 3D30, E12	C-21

Sign No.	Text No.	Sign Text	LOCATION Station	LOCATION Side	PANEL SIZE Width in	PANEL SIZE Height in	PANEL SIZE Area ft²	PANEL SIZE Corner Radii in	PANEL SIZE Border Width in	PANEL SIZE Margin Width in	TEXT SIZE Numbers in	TEXT SIZE Upper Case in	TEXT SIZE Lower Case in	TEXT SIZE Series	Color Combination	Quantity	Total Area ft²	Remarks
9	W21-1A		See Note 2		36	36	9.00	←			See Note 3			→	Black on Orange	1	9.00	Single 4" x 4" post, see DET.E635-10
10	W21-5		See Note 2		30	30	6.25	←			See Note 3			→	Black on Orange	1	6.25	Single 4" x 4" post, see DET.E635-10

Subtotal	2	15.25
Previous Sheets	53	610.00
Rounding	-	4.75
Totals	55	630.00

NOTES:

1. Sign post supports will not be measured for payment and shall be accordance with Std.635-1.
2. See Traffic Control Plans for sign locations. Actual location of the signs will be directed by the CO.
3. Construct and erect all signs in accordance with the "Manual on Uniform Traffic Control Devices" (MUTCD), latest edition.

U.S. DEPARTMENT OF TRANSPORTATION
FEDERAL HIGHWAY ADMINISTRATION
EASTERN FEDERAL LANDS HIGHWAY DIVISION
STERLING, VIRGINIA

NATCHEZ TRACE PARKWAY

CONSTRUCTION SIGN SUMMARY - SCHEDULE A

8/21/2007 11:49:08 AM W:\Projects\natr\3d30\e12\proj_dev\CADD\ntraff.dgn

NPS NO.	REG	STATE	PROJECT	SHEET NO.
604 42,994	SE	MS	PRA-NATR 3D30, E12	C-22

Sign No.	Text No.	Sign Text	LOCATION Station	LOCATION Side	PANEL SIZE Width in	PANEL SIZE Height in	PANEL SIZE Area ft²	PANEL SIZE Corner Radii in	PANEL SIZE Border Width in	PANEL SIZE Margin Width in	TEXT SIZE Numbers in	TEXT SIZE Upper Case in	TEXT SIZE Lower Case in	TEXT SIZE Series	Color Combination	Quantity	Total Area ft²	Remarks
1	G20-2A	END ROAD WORK	See Note 2		48	24	8.00				See Note 3				Black on Orange	4	32.00	Single 4" x 4" post, See Traffic Control Detour & DET. E635-6 & E635-10
2	R4-1	DO NOT PASS	See note 2		36	48	12.00				See note 3				Black on White	10	120.00	Single 4" X 4" wood post Schedule B, Place MP 243: 1+35 Rt, 12+30 Lt, MP 246: 40+70 Rt, MP 247: 4+80 Lt, 43+55 Rt, MP 248: 5+55 Rt, 46+95 Rt, MP 249: 12+45 Lt, MP 251: 24+55 Rt, 36+15 Lt.
3	R4-2	PASS WITH CARE	See note 2		36	48	12.00				See note 3				Black on White	10	120.00	Single 4" X 4" wood post Schedule B, Place MP 243: 6+80 Lt, 7+35 Rt, MP 246: 46+20 Lt, MP 247: 1+20 Rt, 51+25 Lt, MP 249: 2+80 Rt, 6+10 Lt, MP 251: 24+55 Lt, 36+15 Rt, 52+80 Lt.
4	W13-1	45 M.P.H	See Note 2		24	24	4.00				See Note 3				Black on Orange	2	8.00	Use on Parkway, mount with other signs
5	W16-2	500 FEET	See Note 2		24	18	3.00				See Note 3				Black on Orange	2	6.00	Mount with W20-7a sign. See DET. E635-6
6	W20-1	ROAD WORK AHEAD	See Note 2		48	48	16.00				See Note 3				Black on Orange	2	32.00	Double 4" x 4" post, See DET. E635-6 & E635-10
7	W20-4	ONE LANE ROAD AHEAD	See Note 2		48	48	16.00				See Note 3				Black on Orange	2	32.00	Double 4" x 4" post, See DET. E635-6
8	W20-7a		See Note 2		48	48	16.00				See Note 3				Black on Orange	2	32.00	Double 4" x 4" post, See DET. E635-6
9	W21-1A		See Note 2		36	36	9.00				See Note 3				Black on Orange	1	9.00	Single 4" x 4" post, see DET. E635-10
															Subtotal	35	391.00	

NOTES:

1. Sign post supports will not be measured for payment and shall be accordance with Std.635-1.
2. See Traffic Control Plans for sign locations. Actual location of the signs will be directed by the CO.
3. Construct and erect all signs in accordance with the "Manual on Uniform Traffic Control Devices" (MUTCD), latest edition.

U.S. DEPARTMENT OF TRANSPORTATION
FEDERAL HIGHWAY ADMINISTRATION
EASTERN FEDERAL LANDS HIGHWAY DIVISION
STERLING, VIRGINIA

NATCHEZ TRACE PARKWAY

CONSTRUCTION SIGN SUMMARY - SCHEDULE B

Sheet 1 of 2

8/21/2007 11:49:20 AM M:\Projects\natr\3d30al2\pro_dev\CADD\ntraff.dgn

NPS NO.	REG	STATE	PROJECT	SHEET NO.
604 42,994	SE	MS	PRA-NATR 3D30, E12	C-23

Sign No.	Text No.	Sign Text	LOCATION Station	LOCATION Side	PANEL SIZE Width in	PANEL SIZE Height in	PANEL SIZE Area ft²	PANEL SIZE Corner Radii in	PANEL SIZE Border Width in	PANEL SIZE Margin Width in	TEXT SIZE Numbers in	TEXT SIZE Upper Case in	TEXT SIZE Lower Case in	TEXT SIZE Series	Color Combination	Quantity	Total Area ft²	Remarks
10	W21-5	SHOULDER WORK	See Note 2		30	30	6.25	←			See Note 3			→	Black on Orange	1	6.25	Single 4" x 4" post, see DET.E635-10

Subtotal	1	6.25
Previous Sheets	35	391.00
Rounding	-	2.75
Totals	36	400.00

NOTES:

1. Sign post supports will not be measured for payment and shall be accordance with Std.635-1.
2. See Traffic Control Plans for sign locations. Actual location of the signs will be directed by the CO.
3. Construct and erect all signs in accordance with the "Manual on Uniform Traffic Control Devices" (MUTCD), latest edition.

U.S. DEPARTMENT OF TRANSPORTATION
FEDERAL HIGHWAY ADMINISTRATION
EASTERN FEDERAL LANDS HIGHWAY DIVISION
STERLING, VIRGINIA

NATCHEZ TRACE PARKWAY

CONSTRUCTION SIGN SUMMARY - SCHEDULE B

8/21/2007 11:49:25 AM M:\Projects\vdn\3d30e12\proj_dev\CADD\ntraff.dgn

NPS NO.	REG	STATE	PROJECT	SHEET NO.
604 42,994	SE	MS	PRA-NATR 3D30, E12	C-24

Sign No.	Text No.	Sign Text	LOCATION Station	LOCATION Side	PANEL SIZE Width in	PANEL SIZE Height in	PANEL SIZE Area ft²	PANEL SIZE Corner Radii in	PANEL SIZE Border Width in	PANEL SIZE Margin Width in	TEXT SIZE Numbers in	TEXT SIZE Upper Case in	TEXT SIZE Lower Case in	TEXT SIZE Series	Color Combination	Quantity	Total Area ft²	Remarks
1	G20-2A	END ROAD WORK	See Note 2		48	24	8.00				See Note 3				Black on Orange	8	64.00	Single 4" x 4" post, See Traffic Control Detour & DET. E635-6 & E635-10
2	G20-1	ROAD WORK NEXT 7 MILES	See Note 2		48	24	8.00				See Note 3				Black on Orange	2	16.00	Single 4" x 4" post, See Traffic Control Detour
3	M3-1	NORTH	See Note 2		24	12	2.00				See Note 3				Black on Orange	13	26.00	Mount with other signs
4	M3-3	SOUTH	See Note 2		24	12	2.00				See Note 3				Black on Orange	12	24.00	Mount with other signs
5	M4-8	DETOUR	See Note 2		24	12	2.00				See Note 3				Black on Orange	3	6.00	Mount with other signs
6	M4-8a	END DETOUR	See Note 2		24	18	3.00				See Note 3				Black on Orange	2	6.00	Single 4" x 4" post, See Traffic Control Detour
7	M4-9M	DETOUR ⇧	See Note 2		30	24	5.00				See Note 3				Black on Orange	7	35.00	Mount with other signs
8	M4-9R	DETOUR ⇨	See Note 2		30	24	5.00				See Note 3				Black on Orange	7	35.00	Mount with other signs
9	M4-9L	DETOUR ⇦	See Note 2		30	24	5.00				See Note 3				Black on Orange	5	25.00	Mount with other signs
10	M4-9R (Mod.)	DETOUR ⇨	See Note 2		30	24	5.00				See Note 3				Black on Orange	2	10.00	Mount with other signs
11	M4-9L (Mod.)	DETOUR ⇦	See Note 2		30	24	5.00				See Note 3				Black on Orange	3	15.00	Mount with other signs
														Subtotal		64	262.00	

NOTES:

1. Sign post supports will not be measured for payment and shall be accordance with Std.635-1.
2. See Traffic Control Plans for sign locations. Actual location of the signs will be directed by the CO.
3. Construct and erect all signs in accordance with the "Manual on Uniform Traffic Control Devices" (MUTCD), latest edition.

U.S. DEPARTMENT OF TRANSPORTATION
FEDERAL HIGHWAY ADMINISTRATION
EASTERN FEDERAL LANDS HIGHWAY DIVISION
STERLING, VIRGINIA

NATCHEZ TRACE PARKWAY

CONSTRUCTION SIGN SUMMARY - SCHEDULE C

8/21/2007 11:48:42 AM M:\Projects\natr\3d30\e12\proj_dev\CADD\ntraff.dgn

NPS NO.	REG	STATE	PROJECT	SHEET NO.
604 42,994	SE	MS	PRA-NATR 3D30, E12	C-25

Sign No.	Text No.	Sign Text	LOCATION Station	LOCATION Side	PANEL SIZE Width in	PANEL SIZE Height in	PANEL SIZE Area ft²	PANEL SIZE Corner Radii in	PANEL SIZE Border Width in	PANEL SIZE Margin Width in	TEXT SIZE Numbers in	TEXT SIZE Upper Case in	TEXT SIZE Lower Case in	TEXT SIZE Series	Color Combination	Quantity	Total Area ft²	Remarks
12	M4-10L	DETOUR	See Note 2		48	12	4.00				See Note 3				Black on Orange	2	8.00	Mount with other signs
13	M4-10R	DETOUR	See Note 2		48	12	4.00				See Note 3				Black on Orange	1	4.00	Mount with other signs
14	R11-2	ROAD CLOSED	See Note 2		48	30	10.00				See Note 3				Black on White	7	70.00	Mount on Type III Barricade
15	R4-1	DO NOT PASS	See note 2		36	48	12.00				See note 3				Black on White	5	60.00	Single 4" X 4" wood post Schedule C, Place MP 239: 12+50 Rt, 21+90 Lt, 49+70 Rt, MP 240: 29+00 Lt, MP 241: 12+40 Lt.
16	R4-2	PASS WITH CARE	See note 2		36	48	12.00				See note 3				Black on White	5	60.00	Single 4" X 4" wood post Schedule B, Place MP 239: 17+45 Rt, MP 240: 5+00 Lt, 19+40 Rt, 46+10 Lt, MP 241: 1+45 Rt.
17	W13-1	45 M.P.H	See Note 2		24	24	4.00				See Note 3				Black on Orange	2	8.00	Use on Parkway, mount with other signs
18	W16-2	500 FEET	See Note 2		24	18	3.00				See Note 3				Black on Orange	2	6.00	Mount with W20-7a sign, See DET. E635-6
19	W20-1	ROAD WORK AHEAD	See Note 2		48	48	16.00				See Note 3				Black on Orange	2	32.00	Double 4" x 4" post, See DET. E635-6 & E635-10
20	W20-2	DETOUR 1/2 MILE	See Note 2		48	48	16.00				See Note 3				Black on Orange	2	32.00	Double 4" x 4" post, See Traffic Control Detour
															Subtotal	28	280.00	

NOTES:

1. Sign post supports will not be measured for payment and shall be accordance with Std.635-1.
2. See Traffic Control Plans for sign locations. Actual location of the signs will be directed by the CO.
3. Construct and erect all signs in accordance with the "Manual on Uniform Traffic Control Devices" (MUTCD), latest edition.

U.S. DEPARTMENT OF TRANSPORTATION
FEDERAL HIGHWAY ADMINISTRATION
EASTERN FEDERAL LANDS HIGHWAY DIVISION
STERLING, VIRGINIA

NATCHEZ TRACE PARKWAY

CONSTRUCTION SIGN SUMMARY - SCHEDULE C

8/27/2007 3:24:29 PM M:\Projects\natr\3d30el2\proj_dev\CADD\ntrcdf.dgn

NPS NO.	REG	STATE	PROJECT	SHEET NO.
604 42,994	SE	MS	PRA-NATR 3D30, E12	C-26

Sign No.	Text No.	Sign Text	LOCATION Station	LOCATION Side	PANEL SIZE Width in	PANEL SIZE Height in	PANEL SIZE Area ft^2	PANEL SIZE Corner Radii in	PANEL SIZE Border Width in	PANEL SIZE Margin Width in	TEXT SIZE Numbers in	TEXT SIZE Upper Case in	TEXT SIZE Lower Case in	TEXT SIZE Series	Color Combination	Quantity	Total Area ft^2	Remarks
21	W20-2	DETOUR 1500 FT	See Note 2		48	48	16.00				See Note 3				Black on Orange	2	32.00	Double 4" x 4" post, See Traffic Control Detour
22	W20-2	DETOUR 1000 FT	See Note 2		48	48	16.00				See Note 3				Black on Orange	2	32.00	Double 4" x 4" post, See Traffic Control Detour
23	W20-3	ROAD CLOSED 500 FT	See Note 2		48	48	16.00				See Note 3				Black on Orange	2	32.00	Double 4" x 4" post, See Traffic Control Detour
24	W20-4	ONE LANE ROAD AHEAD	See Note 2		48	48	16.00				See Note 3				Black on Orange	2	32.00	Double 4" x 4" post, See DET. E635-6
25	W20-7a		See Note 2		48	48	16.00				See Note 3				Black on Orange	2	32.00	Double 4" x 4" post, See DET. E635-6
26	W21-1A		See Note 2		36	36	9.00				See Note 3				Black on Orange	1	9.00	Single 4" x 4" post, see DET.E635-10
27	W21-5	SHOULDER WORK	See Note 2		30	30	6.25				See Note 3				Black on Orange	1	6.25	Single 4" x 4" post, see DET.E635-10
28	Spec. Sign	PARKWAY	See Note 2		30	12	2.50	2	1	0.5	-	6	-	6C	Black on Orange	23	57.50	Mount with other signs

Subtotal	35	232.75
Previous Sheets	92	542.00
Rounding	-	0.25
Totals	127	775.00

NOTES:

1. Sign post supports will not be measured for payment and shall be accordance with Std.635-1.
2. See Traffic Control Plans for sign locations. Actual location of the signs will be directed by the CO.
3. Construct and erect all signs in accordance with the "Manual on Uniform Traffic Control Devices" (MUTCD), latest edition.

U.S. DEPARTMENT OF TRANSPORTATION
FEDERAL HIGHWAY ADMINISTRATION
EASTERN FEDERAL LANDS HIGHWAY DIVISION
STERLING, VIRGINIA

NATCHEZ TRACE PARKWAY

CONSTRUCTION SIGN SUMMARY - SCHEDULE C

8/27/2007 3:24:46 PM M:\Projects\van\3d30el2\proj_dev\CADD\ntraff.dgn

NPS NO.	REG	STATE	PROJECT	SHEET NO.
604 42,994	SE	MS	PRA-NATR 3D30, E12	C-27

Sign No.	Text No.	Sign Text	LOCATION		PANEL SIZE						TEXT SIZE				Color Combination	Quantity	Total Area ft^2	Remarks
			Station	Side	Width in	Height in	Area ft^2	Corner Radii in	Border Width in	Margin Width in	Numbers in	Upper Case in	Lower Case in	Series				
1	W13-1		See Note 2		24	24	4.00	←			See Note 3			→	Black on Orange	2	8.00	Use on Parkway, mount with other signs
2	W16-2		See Note 2		24	18	3.00	←			See Note 3			→	Black on Orange	2	6.00	Mount with W20-7a sign. See DET. E635-6
3	W20-4		See Note 2		48	48	16.00	←			See Note 3			→	Black on Orange	2	32.00	Double 4" x 4" post. See DET. E635-6
4	W20-7a		See Note 2		48	48	16.00	←			See Note 3			→	Black on Orange	2	32.00	Double 4" x 4" post. See DET. E635-6
5	W21-1A		See Note 2		36	36	9.00	←			See Note 3			→	Black on Orange	1	9.00	Single 4" x 4" post, see DET. E635-10
6	W21-5		See Note 2		30	30	6.25	←			See Note 3			→	Black on Orange	1	6.25	Single 4" x 4" post, see DET. E635-10
														Total		10	93.25	
														Rounded total		10	94.00	

NOTES:

1. Sign post supports will not be measured for payment and shall be accordance with Std.635-1.
2. See Traffic Control Plans for sign locations. Actual location of the signs will be directed by the CO.
3. Construct and erect all signs in accordance with the "Manual on Uniform Traffic Control Devices" (MUTCD), latest edition.

U.S. DEPARTMENT OF TRANSPORTATION
FEDERAL HIGHWAY ADMINISTRATION
EASTERN FEDERAL LANDS HIGHWAY DIVISION
STERLING, VIRGINIA

NATCHEZ TRACE PARKWAY

CONSTRUCTION SIGN SUMMARY - SCHEDULE D

9/5/2007 3:49:09 PM M:\Projects\natr\3d30.el2\proj_de\CADD\ntraff.dgn

NPS NO.	REG	STATE	PROJECT	SHEET NO.
604 / 42,994	SE	MS	PRA-NATR 3D30, E12	D-1

NOTES:

1. Plans were developed from Parkway's Land-Use Plans and from as-builts. Stationing was wheel- measured and painted along the right edge of pavement every 50 ft with P-K nails placed every 500 ft.
2. Transition between milling depths and provide pavement overlay tie-ins to side roads in accordance with Detail E401-A.
3. See Bridge Paving Summary & Typical Sections for additional scope of work at bridges. Sawcut and seal construction joints at the bridges (See Detail E414-A).
4. Call Mississippi One Call System, Inc. at 1-800-227-6477 or 601-362-4374 prior to digging.

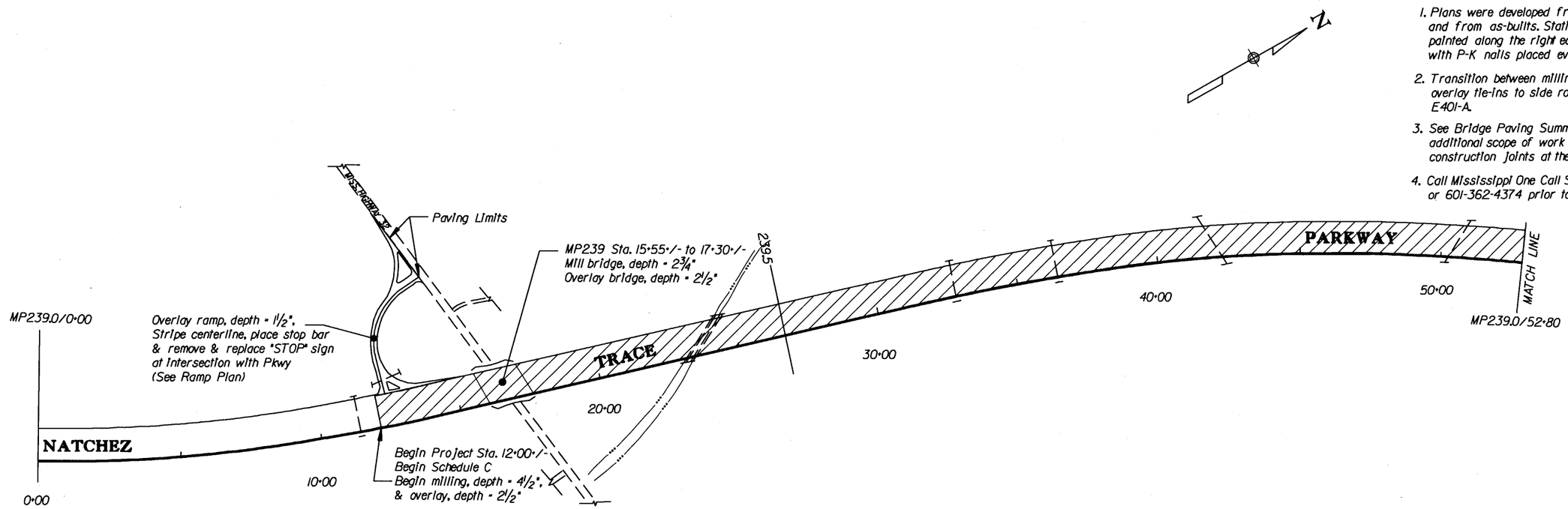

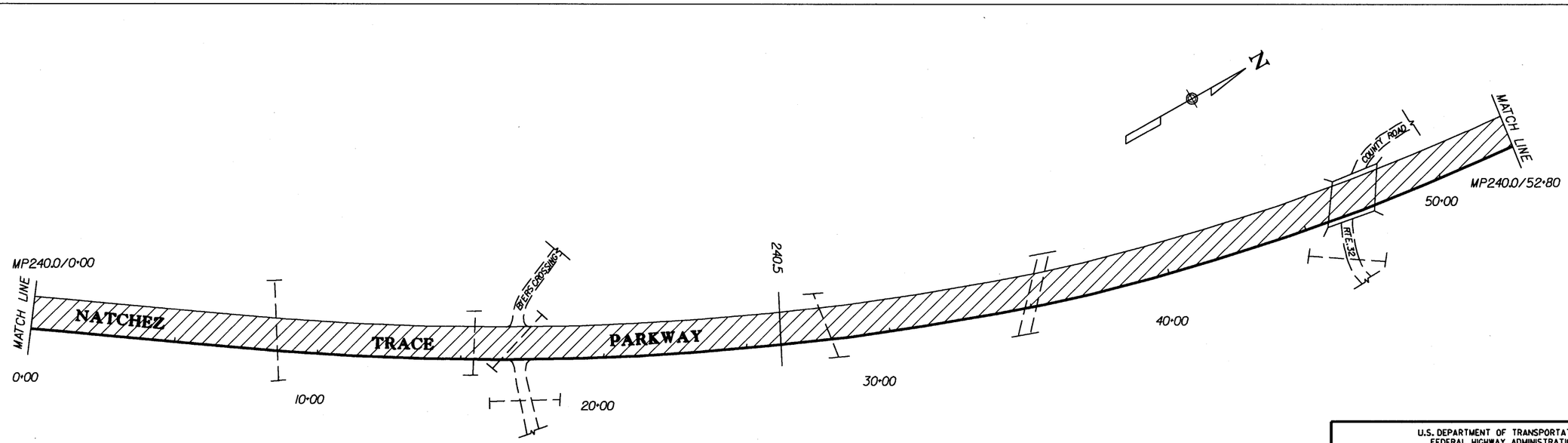

4½" depth milling areas

proposed reconstruction area

U.S. DEPARTMENT OF TRANSPORTATION
FEDERAL HIGHWAY ADMINISTRATION
EASTERN FEDERAL LANDS HIGHWAY DIVISION
STERLING, VIRGINIA

NATCHEZ TRACE PARKWAY

CONSTRUCTION PLANS

MP 239 to 240

0 200 400
SCALE IN FEET

SHEET 1 OF 14

8/22/2007 11:12:07 AM M:\Projects\natr\3d30e12\proj_dev\CADD\D-natr3d30e12_pp.dgn

NPS NO.	REG	STATE	PROJECT	SHEET NO.
604 42,994	SE	MS	PRA-NATR 3D30, E12	D-2

NOTES:

1. Plans were developed from Parkway's Land-Use Plans and from as-builts. Stationing was wheel- measured and painted along the right edge of pavement every 50 ft with P-K nails placed every 500 ft.
2. Transition between milling depths and provide pavement overlay tie-ins to side roads in accordance with Detail E401-A.
3. See Bridge Paving Summary & Typical Sections for additional scope of work at bridges. Sawcut and seal construction joints at the bridges (See Detail E414-A).
4. Call Mississippi One Call System, Inc. at 1-800-227-6477 or 601-362-4374 prior to digging.

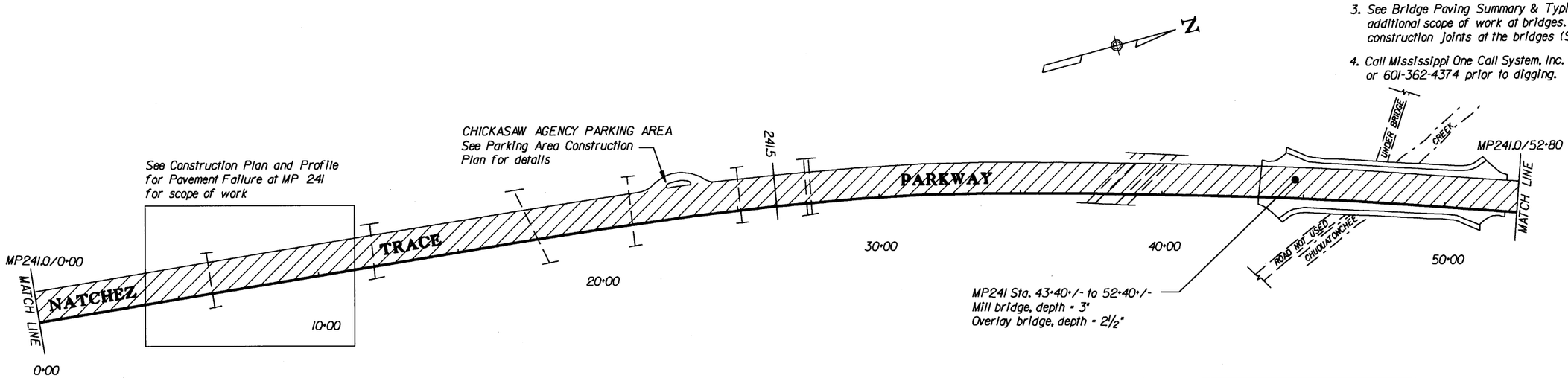

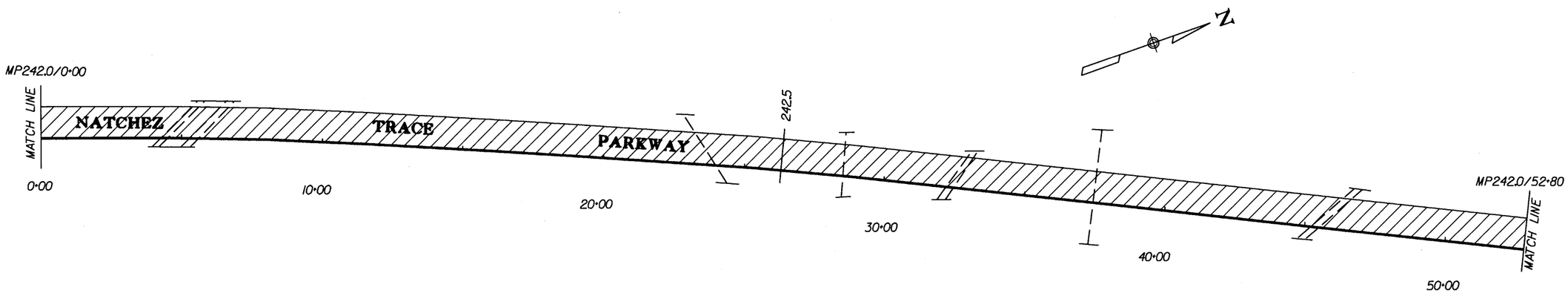

4½" depth milling areas

proposed reconstruction area

U.S. DEPARTMENT OF TRANSPORTATION
FEDERAL HIGHWAY ADMINISTRATION
EASTERN FEDERAL LANDS HIGHWAY DIVISION
STERLING, VIRGINIA

NATCHEZ TRACE PARKWAY

CONSTRUCTION PLANS

MP 241 to 242

0 200 400
SCALE IN FEET

SHEET 2 OF 14

8/22/2007 11:22:5 AM M:\Projects\natr\3d30\e12\proj_dev\CADD\D-natr-3d30e12_pp.dgn

NPS NO.	REG	STATE	PROJECT	SHEET NO.
604 / 42,994	SE	MS	PRA-NATR 3D30, E12	D-3

NOTES:

1. Plans were developed from Parkway's Land-Use Plans and from as-builts. Stationing was wheel-measured and painted along the right edge of pavement every 50 ft with P-K nails placed every 500 ft.
2. Transition between milling depths and provide pavement overlay tie-ins to side roads in accordance with Detail E401-A.
3. See Bridge Paving Summary & Typical Sections for additional scope of work at bridges. Sawcut and seal construction joints at the bridges (See Detail E414-A).
4. Call Mississippi One Call System, Inc. at 1-800-227-6477 or 601-362-4374 prior to digging.

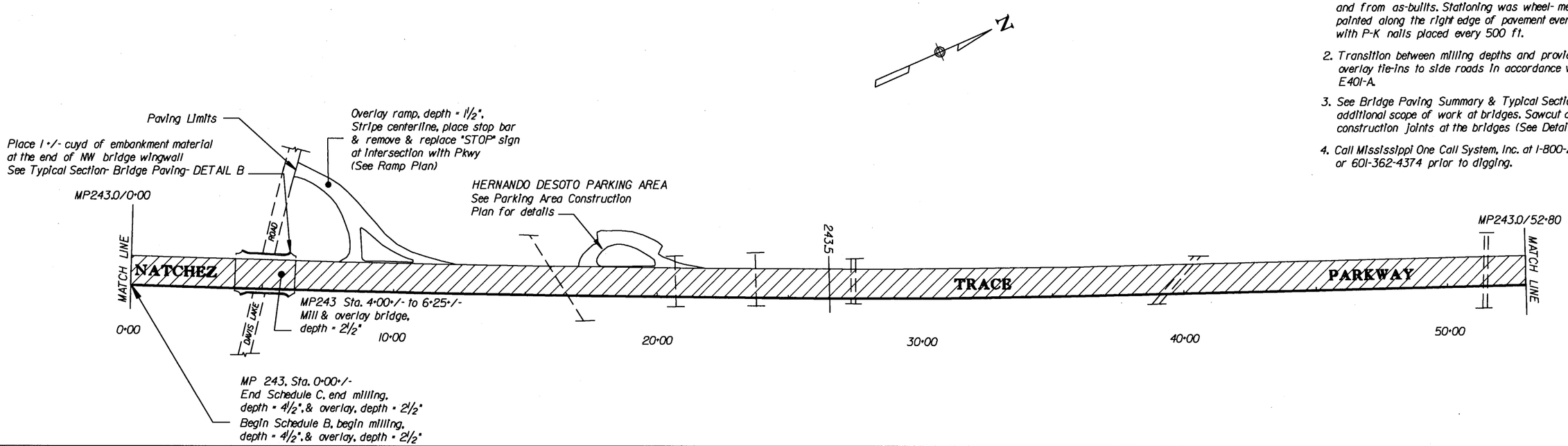

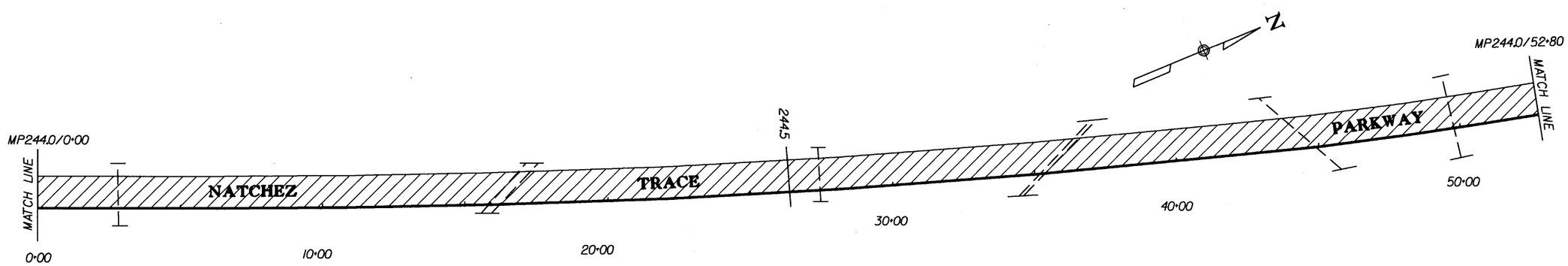

4½" depth milling areas

proposed reconstruction area

U.S. DEPARTMENT OF TRANSPORTATION
FEDERAL HIGHWAY ADMINISTRATION
EASTERN FEDERAL LANDS HIGHWAY DIVISION
STERLING, VIRGINIA

NATCHEZ TRACE PARKWAY

CONSTRUCTION PLANS

MP 243 to 244

0 200 400
SCALE IN FEET

SHEET 3 OF 14

8/22/2007 11:12:25 AM W:\Projects\natr\3d30\e12\proj_dev\CADD\D-natr3d30e12_pddgn

NPS NO.	REG	STATE	PROJECT	SHEET NO.
604 / 42,994	SE	MS	PRA-NATR 3D30, E12	D-4

NOTES:

1. Plans were developed from Parkway's Land-Use Plans and from as-builts. Stationing was wheel- measured and painted along the right edge of pavement every 50 ft with P-K nails placed every 500 ft.
2. Transition between milling depths and provide pavement overlay tie-ins to side roads in accordance with Detail E401-A.
3. See Bridge Paving Summary & Typical Sections for additional scope of work at bridges. Sawcut and seal construction joints at the bridges (See Detail E414-A).
4. Call Mississippi One Call System, Inc. at 1-800-227-6477 or 601-362-4374 prior to digging.

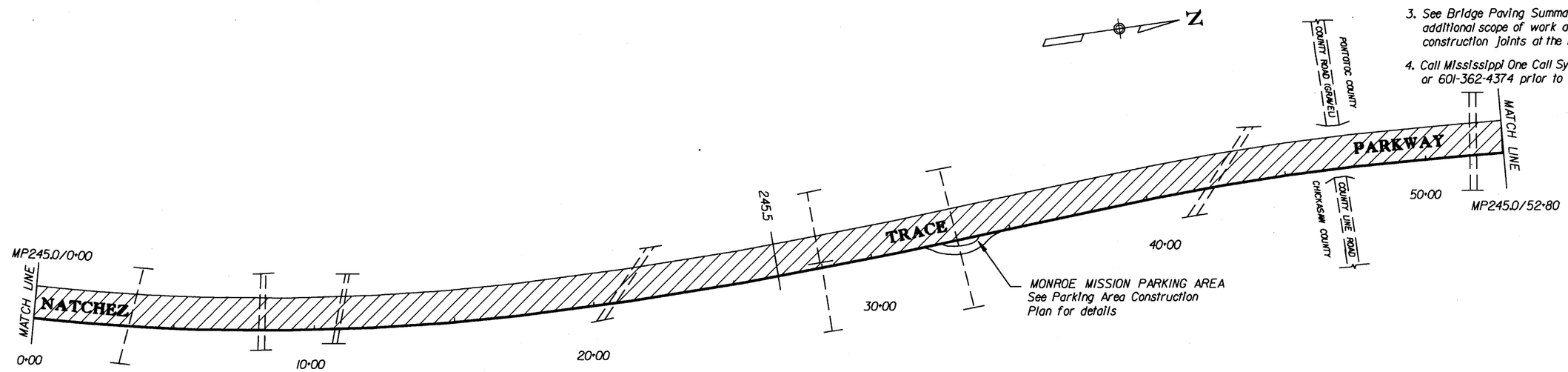

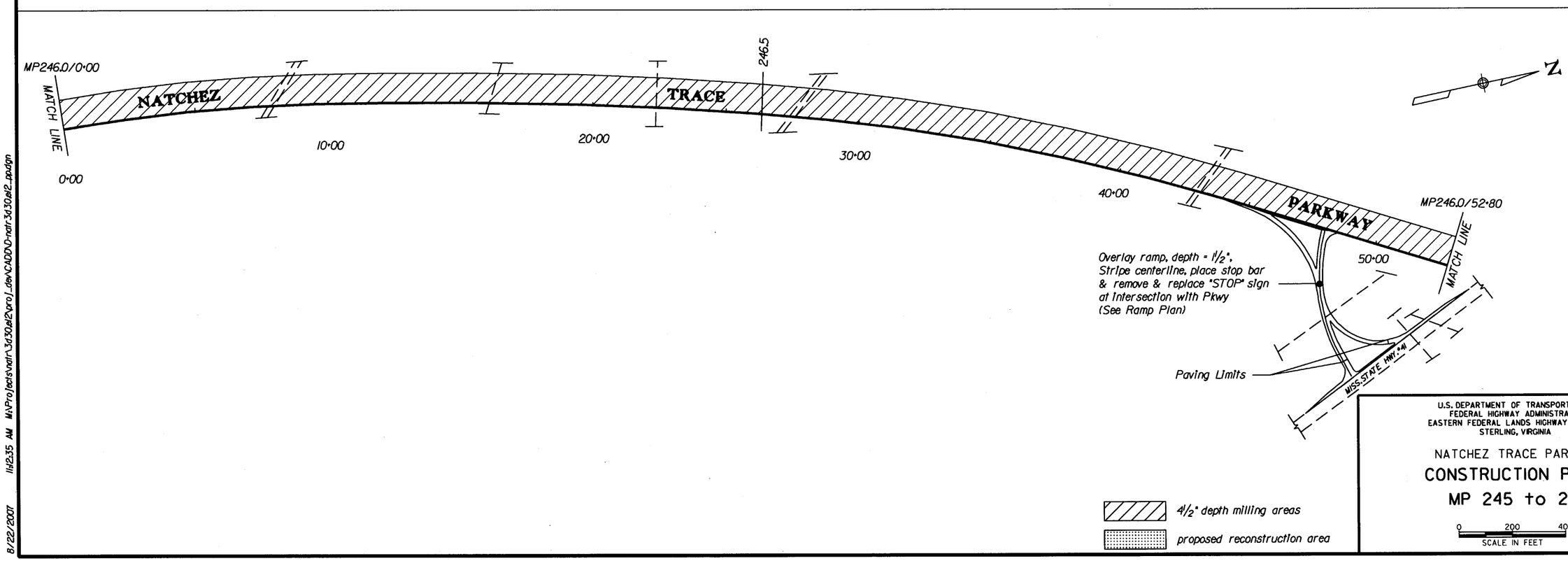

U.S. DEPARTMENT OF TRANSPORTATION
FEDERAL HIGHWAY ADMINISTRATION
EASTERN FEDERAL LANDS HIGHWAY DIVISION
STERLING, VIRGINIA

NATCHEZ TRACE PARKWAY

CONSTRUCTION PLANS

MP 245 to 246

0 200 400
SCALE IN FEET

SHEET 4 OF 14

8/22/2007 11:12:35 AM M:\Projects\natr\3d30\e12\pro_dev\CADD\D-natr3d30e12_pp.dgn

NPS NO.	REG	STATE	PROJECT	SHEET NO.
604 / 42,994	SE	MS	PRA-NATR 3D30, E12	D-5

NOTES:

1. Plans were developed from Parkway's Land-Use Plans and from as-builts. Stationing was wheel- measured and painted along the right edge of pavement every 50 ft with P-K nails placed every 500 ft.
2. Transition between milling depths and provide pavement overlay tie-ins to side roads in accordance with Detail E401-A.
3. See Bridge Paving Summary & Typical Sections for additional scope of work at bridges. Sawcut and seal construction joints at the bridges (See Detail E414-A).
4. Call Mississippi One Call System, Inc. at 1-800-227-6477 or 601-362-4374 prior to digging.

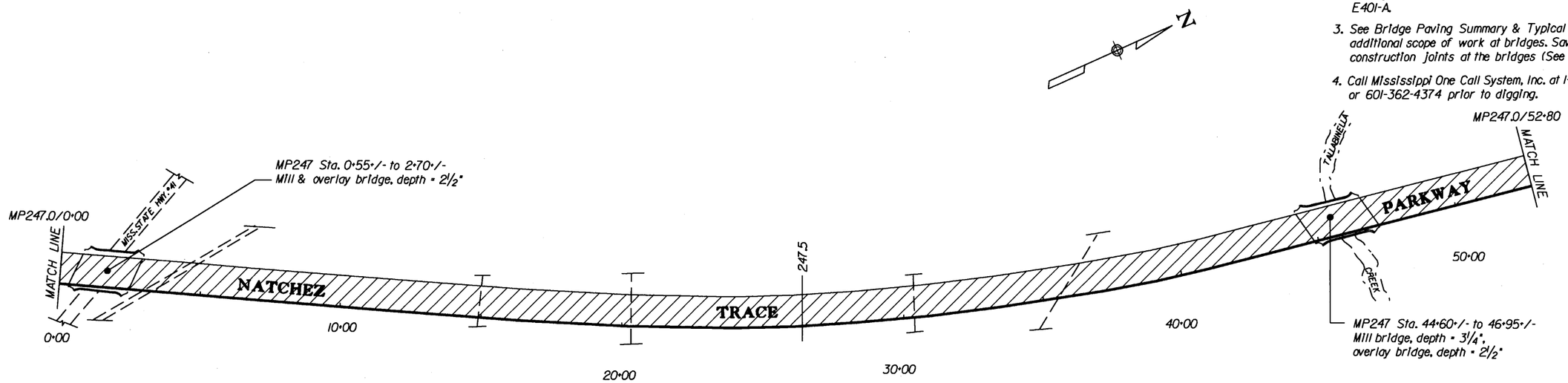

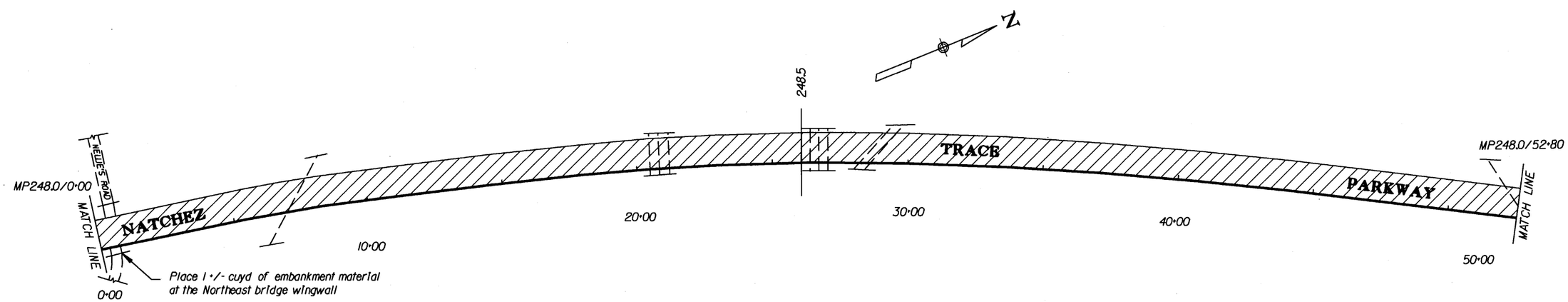

4 1/2" depth milling areas

proposed reconstruction area

U.S. DEPARTMENT OF TRANSPORTATION
FEDERAL HIGHWAY ADMINISTRATION
EASTERN FEDERAL LANDS HIGHWAY DIVISION
STERLING, VIRGINIA

NATCHEZ TRACE PARKWAY

CONSTRUCTION PLANS

MP 247 to 248

0 200 400
SCALE IN FEET

SHEET 5 OF 14

8/22/2007 11:12:42 AM M:\Projects\natr\3d30\e12\pro_dev\CADD\D-natr3d30e12_pp.dgn

NPS NO.	REG	STATE	PROJECT	SHEET NO.
604 / 42,994	SE	MS	PRA-NATR 3D30, E12	D-6

NOTES:

1. Plans were developed from Parkway's Land-Use Plans and from as-builts. Stationing was wheel- measured and painted along the right edge of pavement every 50 ft with P-K nails placed every 500 ft.
2. Transition between milling depths and provide pavement overlay tie-ins to side roads in accordance with Detail E401-A.
3. See Bridge Paving Summary & Typical Sections for additional scope of work at bridges. Sawcut and seal construction joints at the bridges (See Detail E414-A).
4. Call Mississippi One Call System, Inc. at 1-800-227-6477 or 601-362-4374 prior to digging.

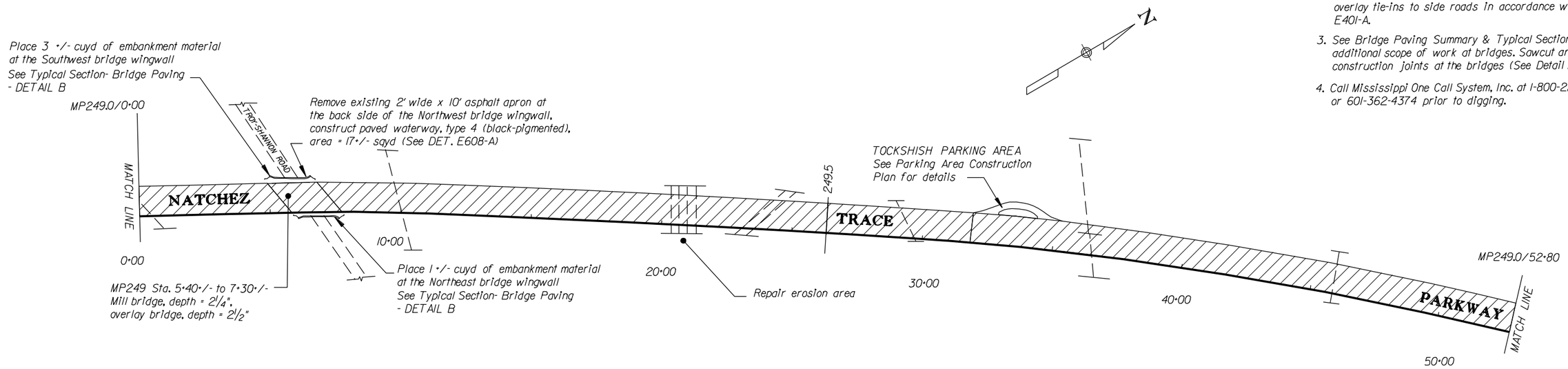

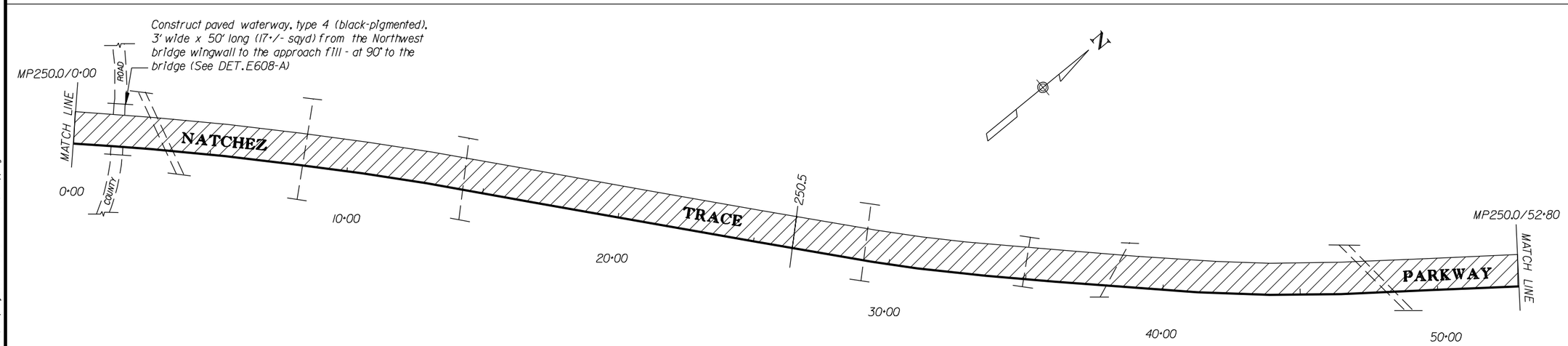

4 1/2" depth milling areas

proposed reconstruction area

U.S. DEPARTMENT OF TRANSPORTATION
FEDERAL HIGHWAY ADMINISTRATION
EASTERN FEDERAL LANDS HIGHWAY DIVISION
STERLING, VIRGINIA

NATCHEZ TRACE PARKWAY

CONSTRUCTION PLANS

MP 249 to 250

0 200 400
SCALE IN FEET

8/27/2007 2:47:51 PM M:\Projects\natr\3d30\el2\proj_dev\CADD\D-natr3d30el2_ppdgn

NPS NO.	REG	STATE	PROJECT	SHEET NO.
604 / 42,994	SE	MS	PRA-NATR 3D30, E12	D-7

NOTES:

1. Plans were developed from Parkway's Land-Use Plans and from as-builts. Stationing was wheel- measured and painted along the right edge of pavement every 50 ft with P-K nails placed every 500 ft.
2. Transition between milling depths and provide pavement overlay tie-ins to side roads in accordance with Detail E401-A.
3. See Bridge Paving Summary & Typical Sections for additional scope of work at bridges. Sawcut and seal construction joints at the bridges (See Detail E414-A).
4. Call Mississippi One Call System, Inc. at 1-800-227-6477 or 601-362-4374 prior to digging.

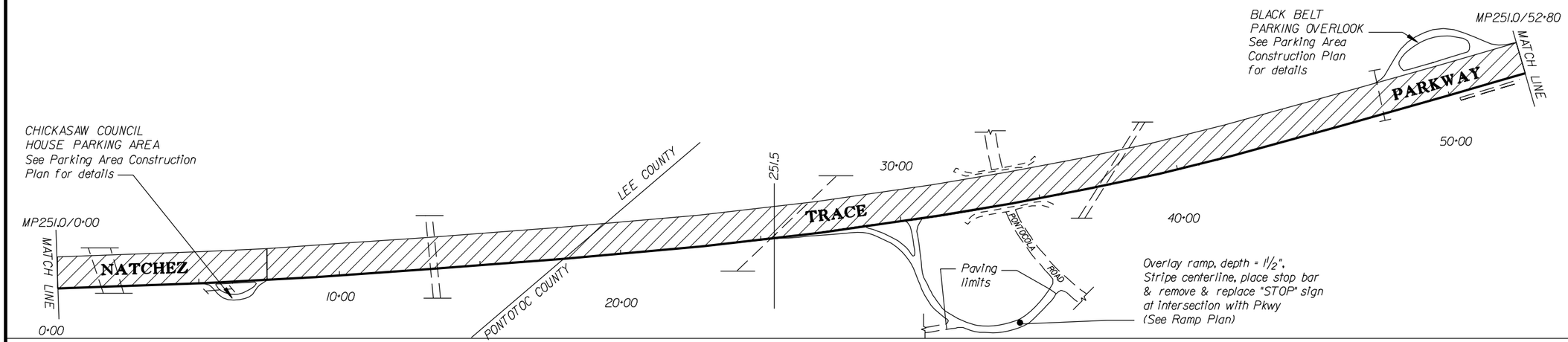

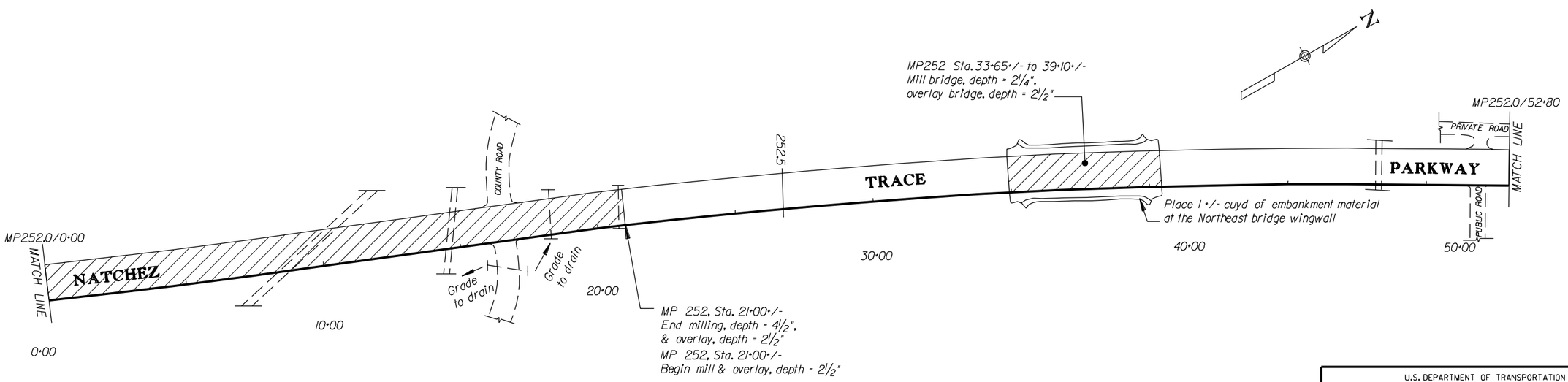

4½" depth milling areas

proposed reconstruction area

U.S. DEPARTMENT OF TRANSPORTATION
FEDERAL HIGHWAY ADMINISTRATION
EASTERN FEDERAL LANDS HIGHWAY DIVISION
STERLING, VIRGINIA

NATCHEZ TRACE PARKWAY

CONSTRUCTION PLANS

MP 251 to 252

0 200 400
SCALE IN FEET

8/27/2007 2:48:00 PM M:\Projects\natr\3d30\e12\proj_dev\CADD\D-natr3d30e12_pp.dgn

NPS NO.	REG	STATE	PROJECT	SHEET NO.
604 / 42,994	SE	MS	PRA-NATR 3D30, E12	D-8

NOTES:

1. Plans were developed from Parkway's Land-Use Plans and from as-builts. Stationing was wheel- measured and painted along the right edge of pavement every 50 ft with P-K nails placed every 500 ft.
2. Transition between milling depths and provide pavement overlay tie-ins to side roads in accordance with Detail E401-A.
3. See Bridge Paving Summary & Typical Sections for additional scope of work at bridges. Sawcut and seal construction joints at the bridges (See Detail E414-A).
4. Call Mississippi One Call System, Inc. at 1-800-227-6477 or 601-362-4374 prior to digging.

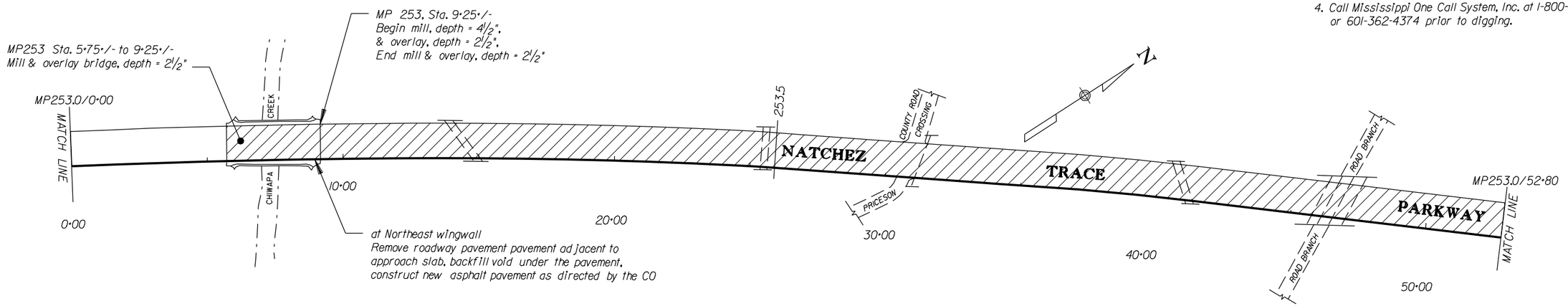

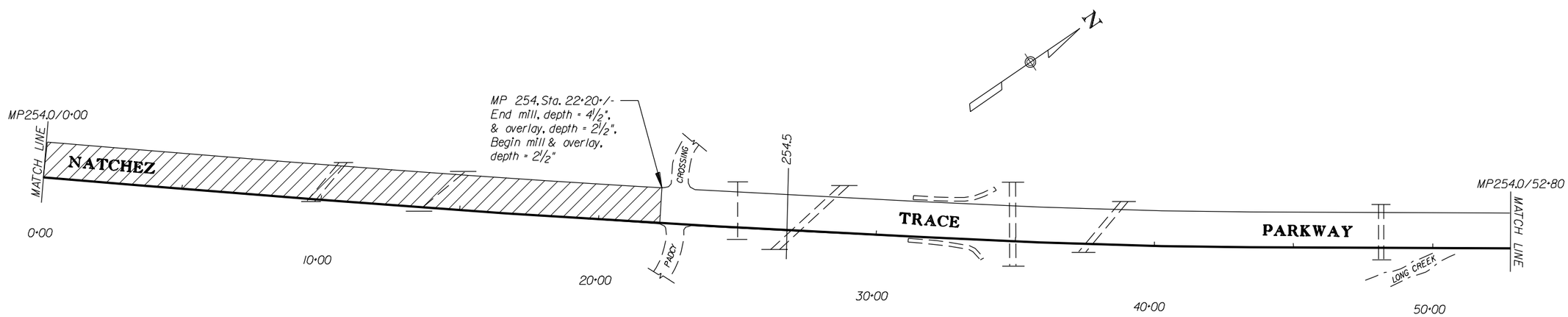

4½" depth milling areas

proposed reconstruction area

U.S. DEPARTMENT OF TRANSPORTATION
FEDERAL HIGHWAY ADMINISTRATION
EASTERN FEDERAL LANDS HIGHWAY DIVISION
STERLING, VIRGINIA

NATCHEZ TRACE PARKWAY

CONSTRUCTION PLANS
MP 253 to 254

0 200 400
SCALE IN FEET

SHEET 8 OF 14

8/27/2007 2:48:16 PM M:\Projects\natr\3d30el2\proj_dev\CADD\natr3d30el2_ppdgn

NPS NO.	REG	STATE	PROJECT	SHEET NO.
604 / 42,994	SE	MS	PRA-NATR 3D30, E12	D-9

NOTES:

1. Plans were developed from Parkway's Land-Use Plans and from as-builts. Stationing was wheel- measured and painted along the right edge of pavement every 50 ft with P-K nails placed every 500 ft.
2. Transition between milling depths and provide pavement overlay tie-ins to side roads in accordance with Detail E401-A.
3. See Bridge Paving Summary & Typical Sections for additional scope of work at bridges. Sawcut and seal construction joints at the bridges (See Detail E414-A).
4. Call Mississippi One Call System, Inc. at 1-800-227-6477 or 601-362-4374 prior to digging.

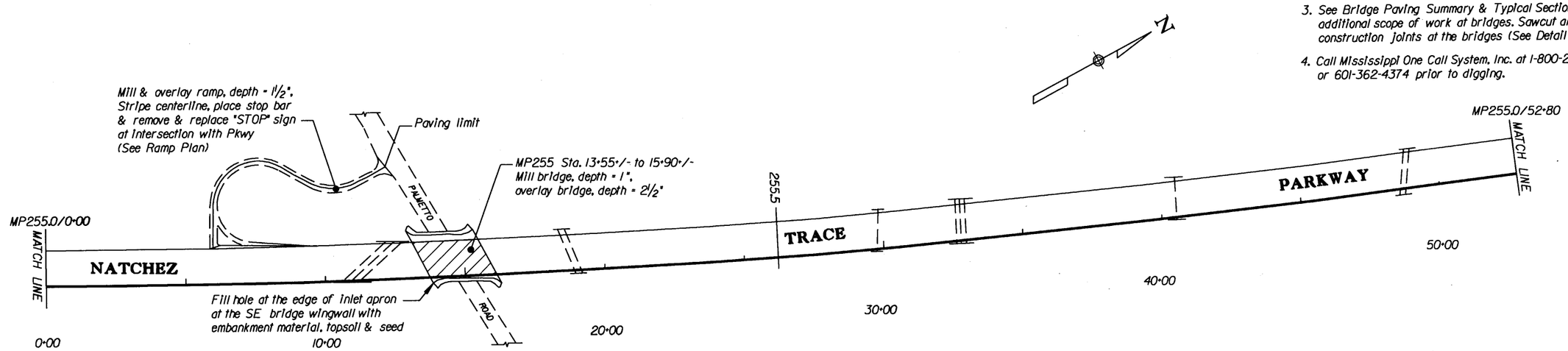

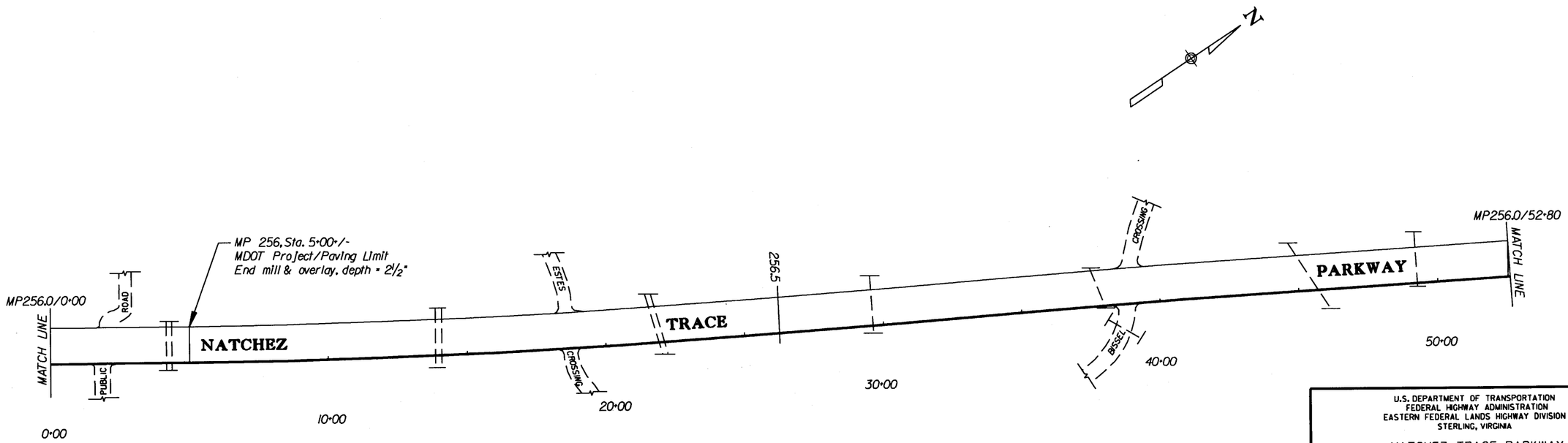

4½" depth milling areas

proposed reconstruction area

U.S. DEPARTMENT OF TRANSPORTATION
FEDERAL HIGHWAY ADMINISTRATION
EASTERN FEDERAL LANDS HIGHWAY DIVISION
STERLING, VIRGINIA

NATCHEZ TRACE PARKWAY

CONSTRUCTION PLANS
MP 255 to 256

0 200 400
SCALE IN FEET

8/23/2007 10:58:12 AM M:\Projects\natr\3d30\e12\proj_dev\CADD\natr3d30e12_ppdgn

NPS NO.	REG	STATE	PROJECT	SHEET NO.
604 42,994	SE	MS	PRA-NATR 3D30, E12	D-10

NOTES:

1. Plans were developed from Parkway's Land-Use Plans and from as-builts. Stationing was wheel- measured and painted along the right edge of pavement every 50 ft with P-K nails placed every 500 ft.
2. Transition between milling depths and provide pavement overlay tie-ins to side roads in accordance with Detail E401-A.
3. See Bridge Paving Summary & Typical Sections for additional scope of work at bridges. Sawcut and seal construction joints at the bridges (See Detail E414-A).
4. Call Mississippi One Call System, Inc. at 1-800-227-6477 or 601-362-4374 prior to digging.

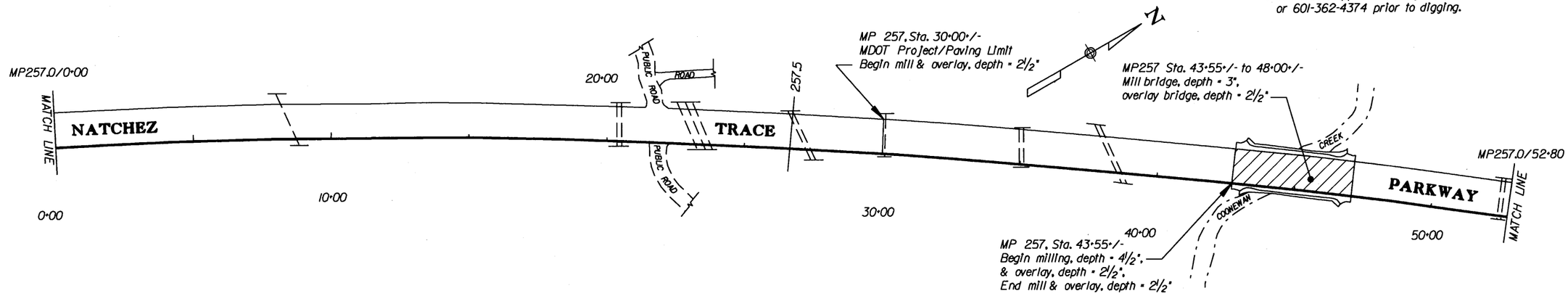

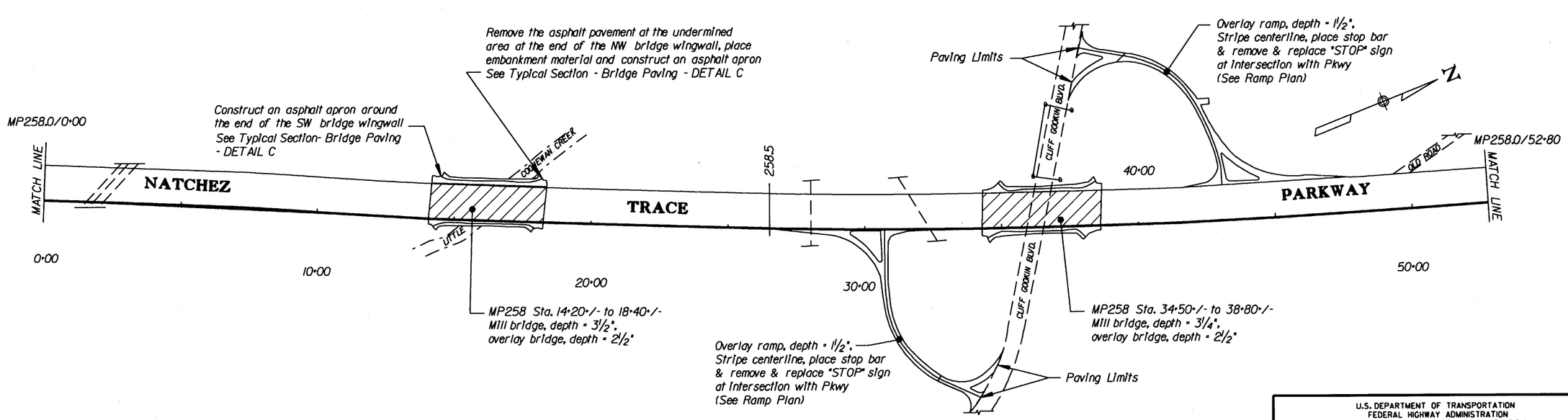

4½" depth milling areas

proposed reconstruction area

U.S. DEPARTMENT OF TRANSPORTATION
FEDERAL HIGHWAY ADMINISTRATION
EASTERN FEDERAL LANDS HIGHWAY DIVISION
STERLING, VIRGINIA

NATCHEZ TRACE PARKWAY

CONSTRUCTION PLANS
MP 257 to 258

0 200 400
SCALE IN FEET

SHEET 10 OF 14

8/23/2007 10:57:00 AM M:\Projects\natr\3d30e12\proj_dev\CADD\D-natr-3d30e12_pp.dgn

NPS NO.	REG	STATE	PROJECT	SHEET NO.
604 42,994	SE	MS	PRA-NATR 3D30, E12	D-11

NOTES:

1. Plans were developed from Parkway's Land-Use Plans and from as-builts. Stationing was wheel- measured and painted along the right edge of pavement every 50 ft with P-K nails placed every 500 ft.
2. Transition between milling depths and provide pavement overlay tie-ins to side roads in accordance with Detail E401-A.
3. See Bridge Paving Summary & Typical Sections for additional scope of work at bridges. Sawcut and seal construction joints at the bridges (See Detail E414-A).
4. Call Mississippi One Call System, Inc. at 1-800-227-6477 or 601-362-4374 prior to digging.

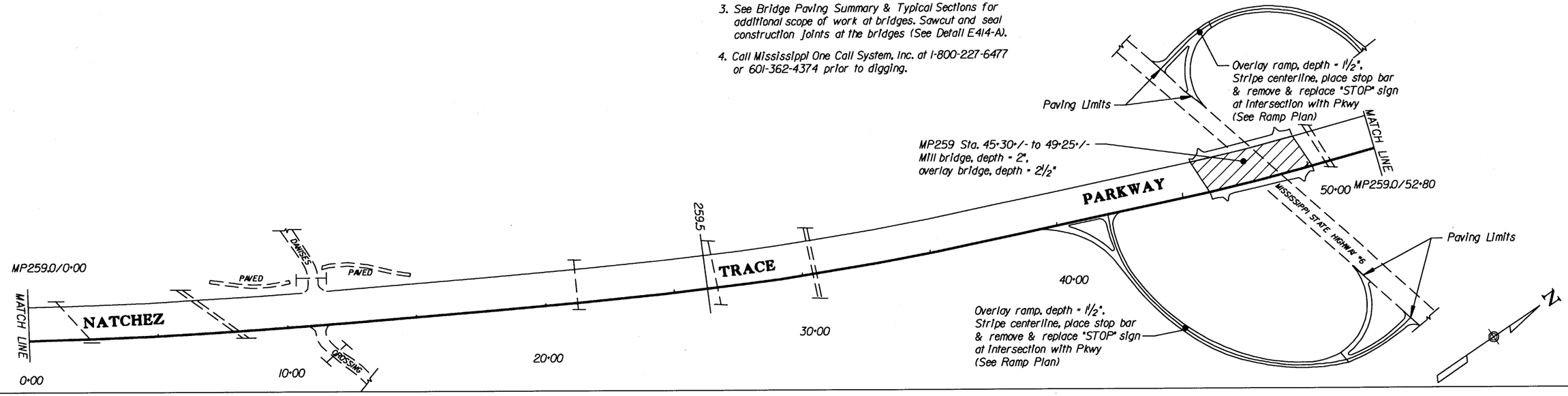

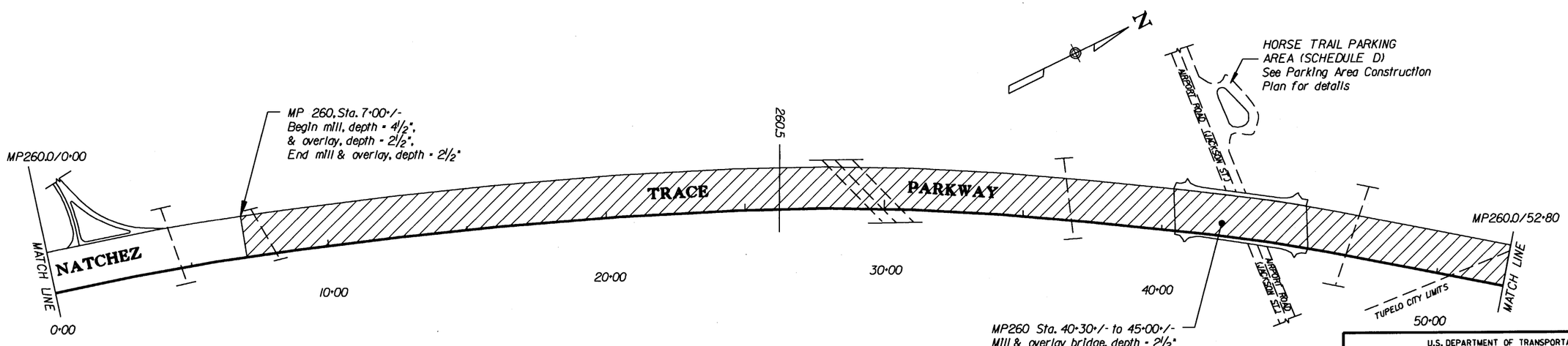

4½" depth milling areas

proposed reconstruction area

U.S. DEPARTMENT OF TRANSPORTATION
FEDERAL HIGHWAY ADMINISTRATION
EASTERN FEDERAL LANDS HIGHWAY DIVISION
STERLING, VIRGINIA

NATCHEZ TRACE PARKWAY

CONSTRUCTION PLANS
MP 259 to 260

0 200 400
SCALE IN FEET

SHEET 11 OF 14

8/22/2007 11:14:28 AM M:\Projects\natr\3d30\el2\proj_dev\CADD\natr3d30el2_ppdgn

NPS NO.	REG	STATE	PROJECT	SHEET NO.
604 / 42,994	SE	MS	PRA-NATR 3D30, E12	D-12

NOTES:

1. Plans were developed from Parkway's Land-Use Plans and from as-builts. Stationing was wheel-measured and painted along the right edge of pavement every 50 ft with P-K nails placed every 500 ft.
2. Transition between milling depths and provide pavement overlay tie-ins to side roads in accordance with Detail E401-A.
3. See Bridge Paving Summary & Typical Sections for additional scope of work at bridges. Sawcut and seal construction joints at the bridges (See Detail E414-A).
4. Call Mississippi One Call System, Inc. at 1-800-227-6477 or 601-362-4374 prior to digging.

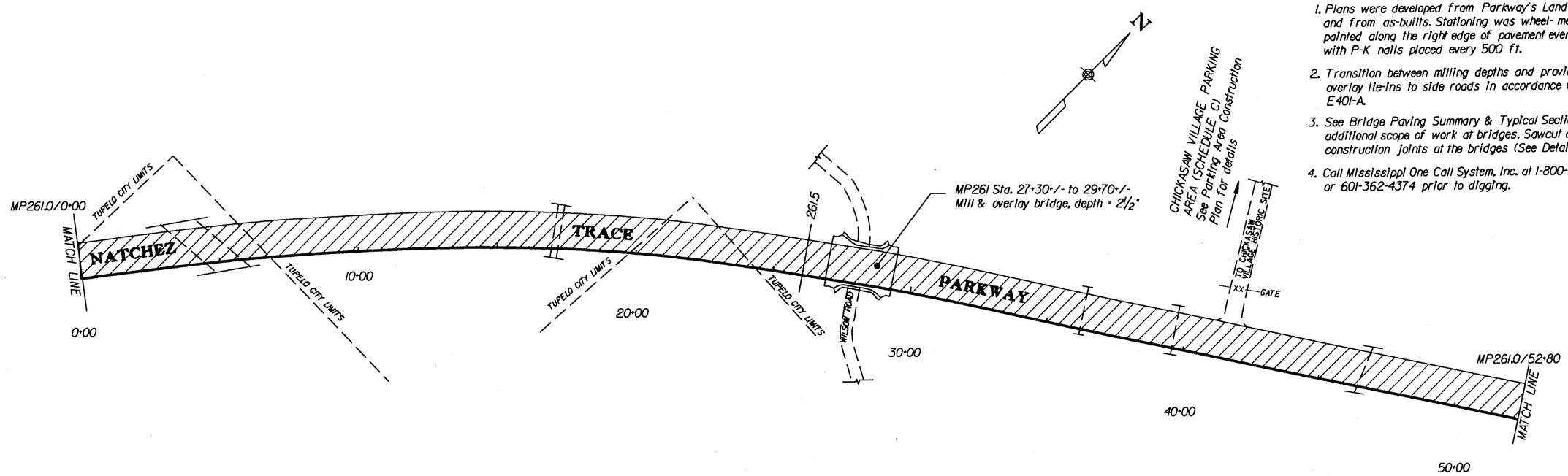

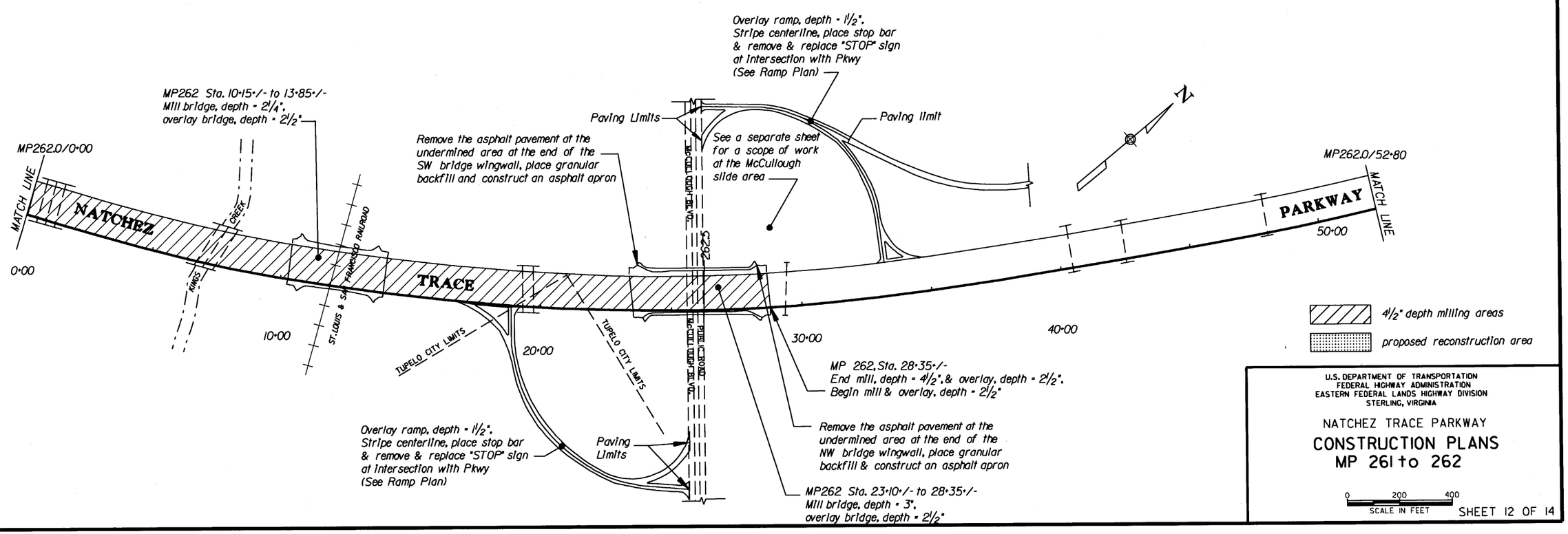

U.S. DEPARTMENT OF TRANSPORTATION
FEDERAL HIGHWAY ADMINISTRATION
EASTERN FEDERAL LANDS HIGHWAY DIVISION
STERLING, VIRGINIA

NATCHEZ TRACE PARKWAY

CONSTRUCTION PLANS
MP 261 to 262

0 200 400
SCALE IN FEET

SHEET 12 OF 14

8/22/2007 11:14:39 AM M:\Projects\natr\3d30\e12\proj_dev\CADD\D-natr3d30e12_pp.dgn

NPS NO.	REG	STATE	PROJECT	SHEET NO.
604 42,994	SE	MS	PRA-NATR 3D30, E12	D-13

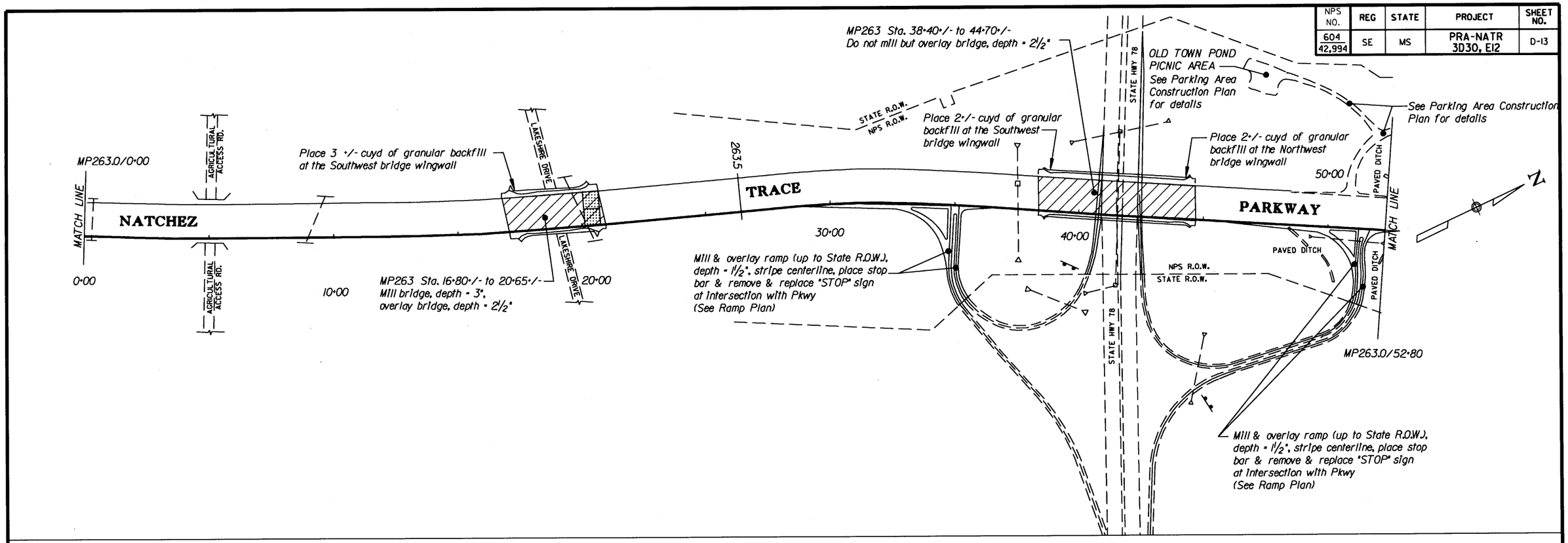

NOTES:

1. Plans were developed from Parkway's Land-Use Plans and from as-builts. Stationing was wheel-measured and painted along the right edge of pavement every 50 ft with P-K nails placed every 500 ft.
2. Transition between milling depths and provide pavement overlay tie-ins to side roads in accordance with Detail E401-A.
3. See Bridge Paving Summary & Typical Sections for additional scope of work at bridges. Sawcut and seal construction joints at the bridges (See Detail E414-A).
4. Call Mississippi One Call System, Inc. at 1-800-227-6477 or 601-362-4374 prior to digging.

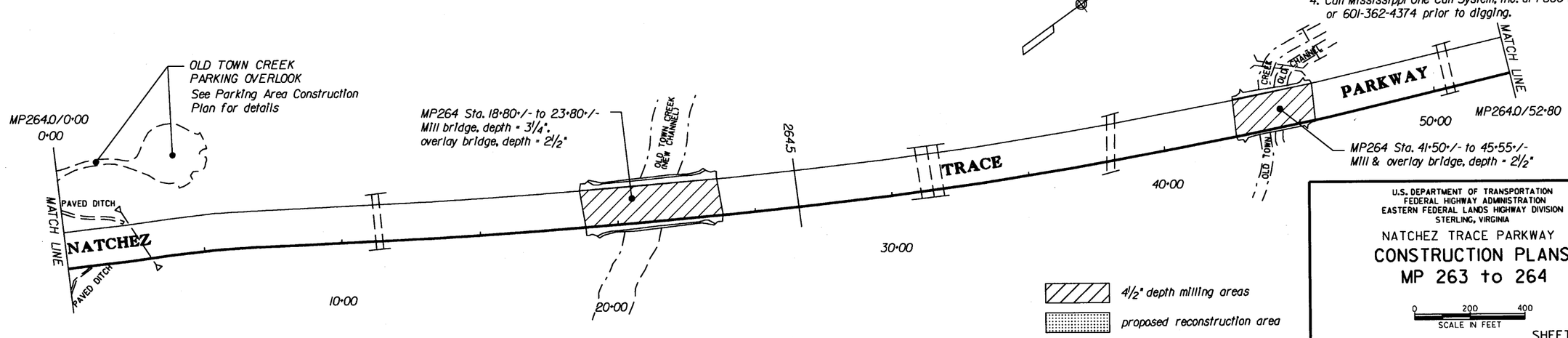

U.S. DEPARTMENT OF TRANSPORTATION
FEDERAL HIGHWAY ADMINISTRATION
EASTERN FEDERAL LANDS HIGHWAY DIVISION
STERLING, VIRGINIA

NATCHEZ TRACE PARKWAY

CONSTRUCTION PLANS
MP 263 to 264

0 200 400
SCALE IN FEET

SHEET 13 OF 14

8/22/2007 11:45:1 AM M:\Projects\nat\3d30\e12\pro_dev\CADD\D-natr3d30e12_pp.dgn

NPS NO.	REG	STATE	PROJECT	SHEET NO.
604 42,994	SE	MS	PRA-NATR 3D30, E12	D-14

NOTES:

1. Plans were developed from Parkway's Land-Use Plans and from as-builts. Stationing was wheel- measured and painted along the right edge of pavement every 50 ft with P-K nails placed every 500 ft.
2. Transition between milling depths and provide pavement overlay tie-ins to side roads in accordance with Detail E401-A.
3. See Bridge Paving Summary & Typical Sections for additional scope of work at bridges. Sawcut and seal construction joints at the bridges (See Detail E414-A).
4. Call Mississippi One Call System, Inc. at 1-800-227-6477 or 601-362-4374 prior to digging.

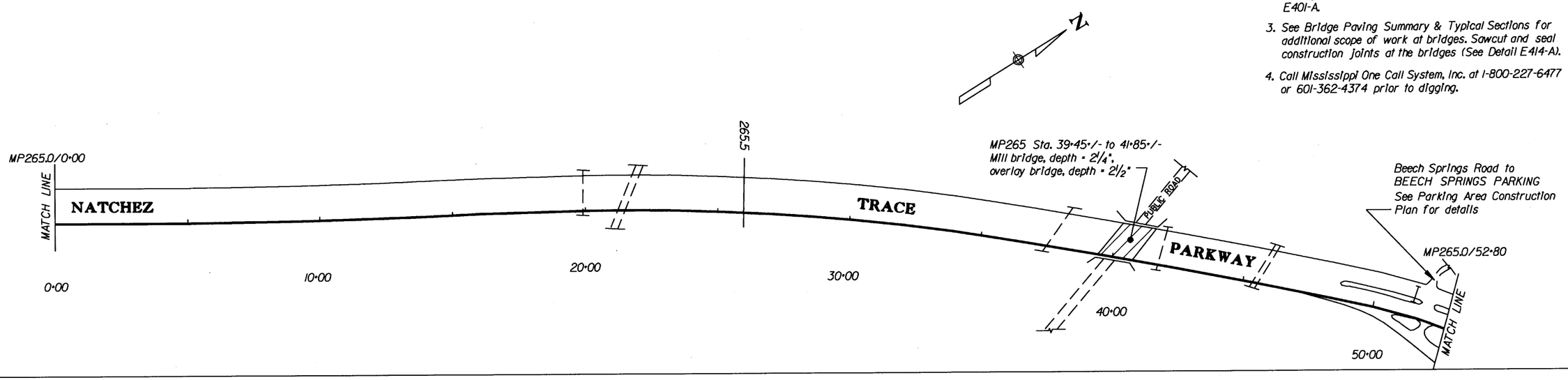

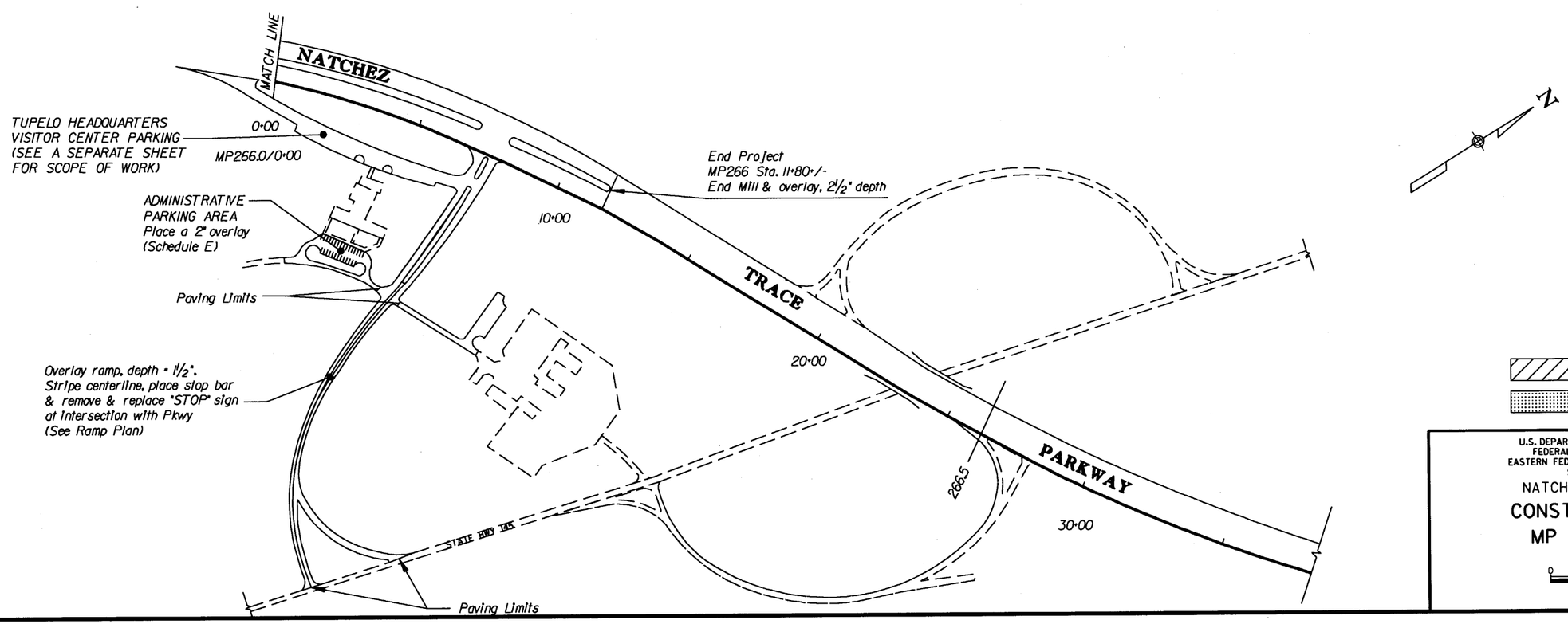

4½" depth milling areas

proposed reconstruction area

U.S. DEPARTMENT OF TRANSPORTATION
FEDERAL HIGHWAY ADMINISTRATION
EASTERN FEDERAL LANDS HIGHWAY DIVISION
STERLING, VIRGINIA

NATCHEZ TRACE PARKWAY

CONSTRUCTION PLANS
MP 265 to 266

0 200 400
SCALE IN FEET

SHEET 14 OF 14

8/22/2007 11:44:59 AM M:\Projects\natr\3d30\e12\proj_dev\CADD\D-natr3d30e12.pwdgn

NPS NO.	REG	STATE	PROJECT	SHEET NO.
604 42,994	SE	MS	PRA-NATR 3D30, E12	D-15

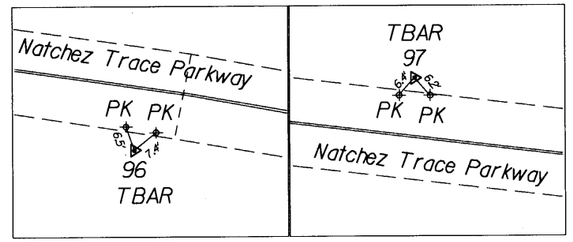

Notes:

1. Horizontal and vertical datum used is assumed.

2. Mapping oriented to the magnetic north.

CP	Northing	Easting	Elevation	Remarks
96	20000.000	20000.000	200.000	tbar
97	20221.458	20000.004	195.982	tbar

3. The stationing on this sheet does not correspond to the stationing on the Construction Plans.

4. The staked centerline alignment points have coordinates as follows:

STATION	NORTHING	EASTING	ELEV	TYPE	PNUM
00+00.000	19974.795	19979.638	200.575	NAIL	15000
00+50.000	20024.114	19987.614	200.108	NAIL	15001
01+00.000	20073.399	19995.515	199.387	NAIL	15002
01+21.619	20094.770	19999.000	199.107	NAIL	15003
01+50.000	20122.788	20003.324	198.671	NAIL	15004
01+76.327	20148.922	20006.680	198.217	NAIL	15005
02+00.000	20172.504	20009.568	197.800	NAIL	15006
02+50.000	20222.098	20015.404	196.891	NAIL	15007
02+80.620	20252.380	20019.102	196.276	NAIL	15008

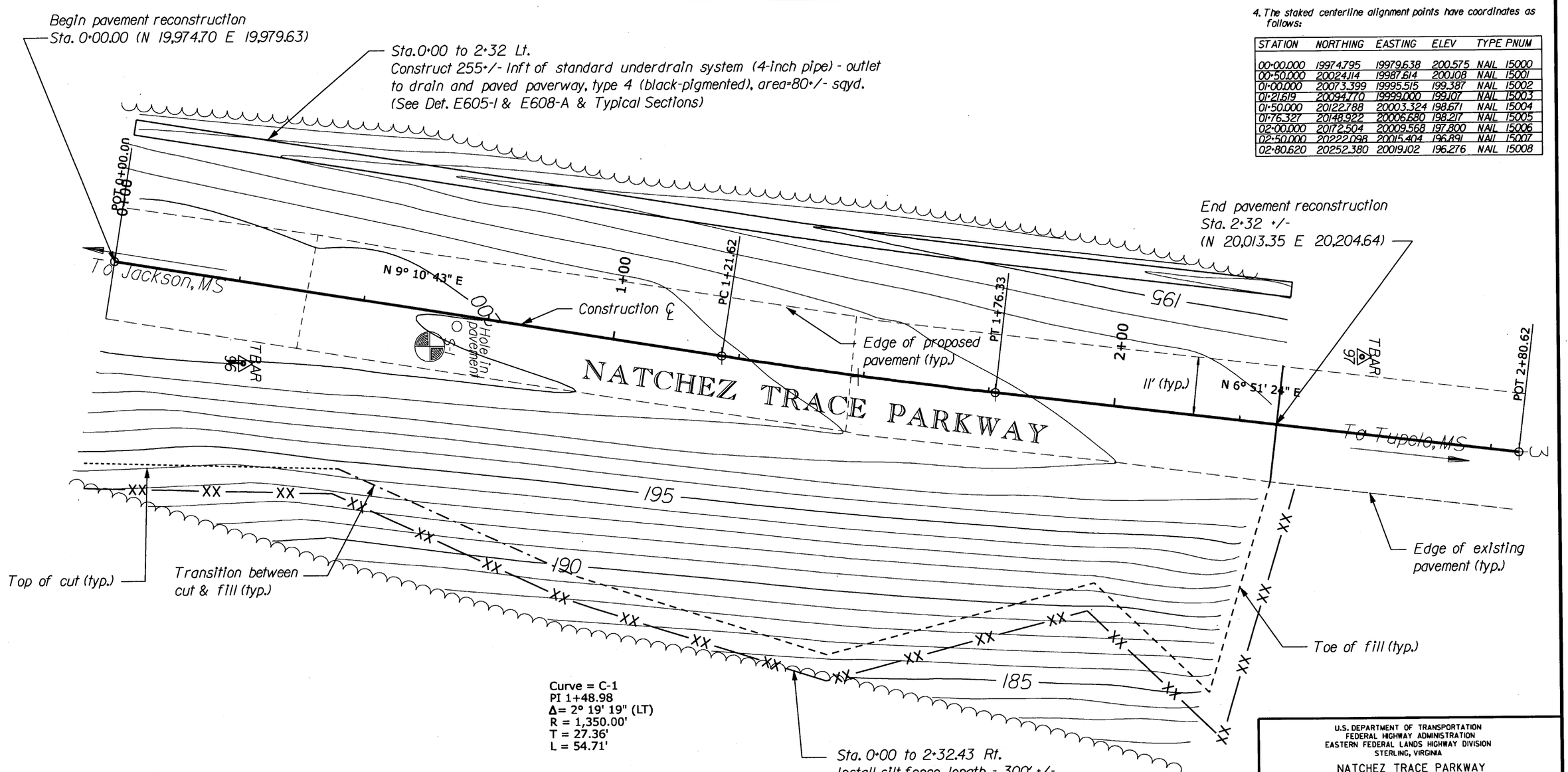

U.S. DEPARTMENT OF TRANSPORTATION
FEDERAL HIGHWAY ADMINISTRATION
EASTERN FEDERAL LANDS HIGHWAY DIVISION
STERLING, VIRGINIA

NATCHEZ TRACE PARKWAY

CONSTRUCTION PLAN
PAVEMENT REPAIR AT MP 241

0 10 20
SCALE IN FEET

8/22/2007 6:22:22 PM M:\Projects\natr\3d30el2\pro1_dev\CADDCopy of natrslide2d_v8.dgn

NPS NO.	REG	STATE	PROJECT	SHEET NO.	TOTAL SHEETS
604 42,994	SE	MS	PRA-NATR 3D30, E12	D16	95

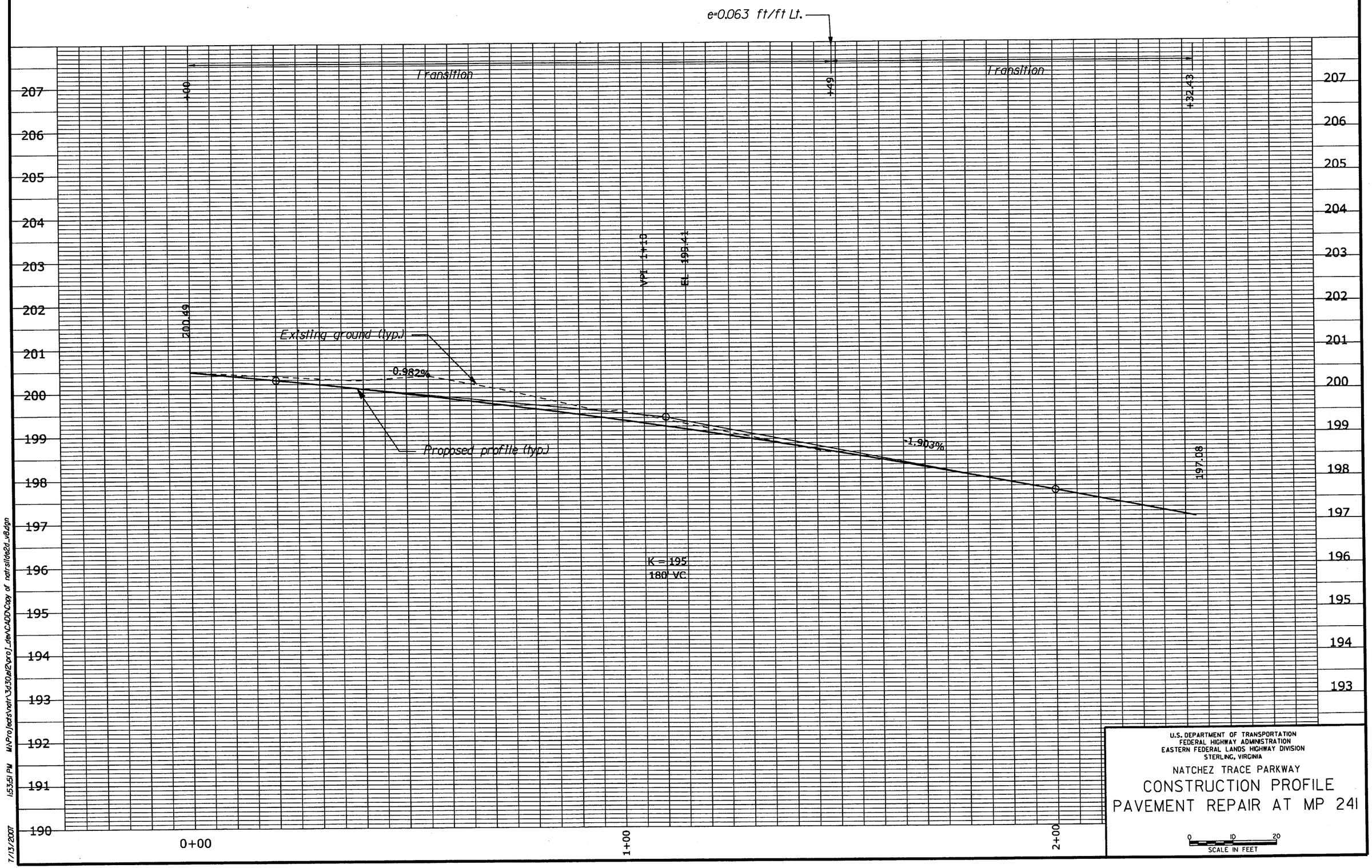

U.S. DEPARTMENT OF TRANSPORTATION
FEDERAL HIGHWAY ADMINISTRATION
EASTERN FEDERAL LANDS HIGHWAY DIVISION
STERLING, VIRGINIA

NATCHEZ TRACE PARKWAY

CONSTRUCTION PROFILE
PAVEMENT REPAIR AT MP 241

0 10 20
SCALE IN FEET

7/13/2007 1:53:51 PM W:\Projects\natr\3d30e12\proj_dev\CADD\Copy of natrsltde2d_v8.dgn

NPS NO.	REG	STATE	PROJECT	SHEET NO.
604 / 42,994	SE	MS	PRA-NATR 3D30, E12	E-1

NOTES:

1. Provide pavement overlay tie-ins to sideroads utilizing Detail E401-A.
2. Parkway shown not to scale.
3. Ensure positive drainage on all paved areas once paving is complete (0.5% min. slope).
4. Replace all striping in existing locations, as approved by the CO.

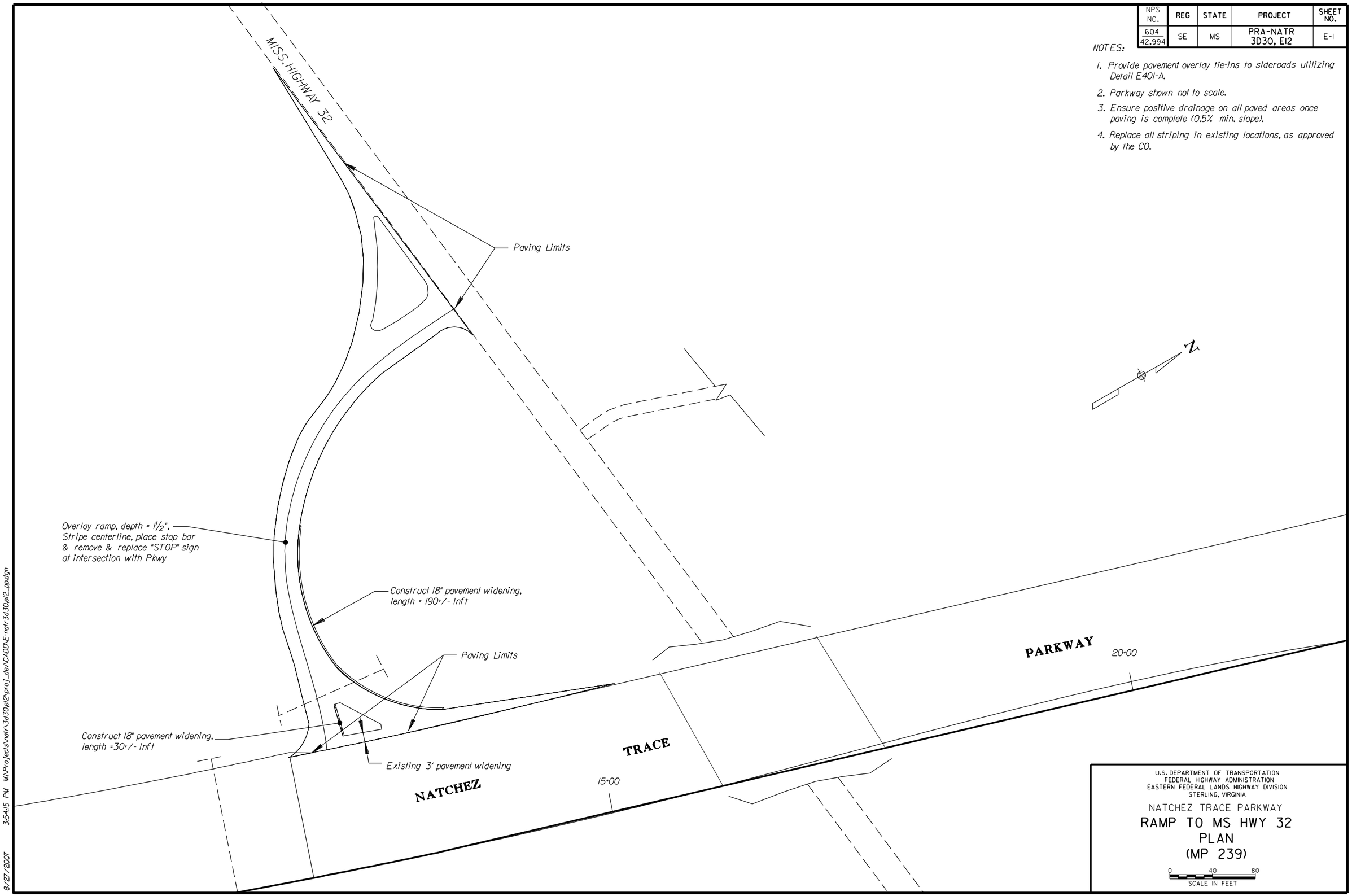

U.S. DEPARTMENT OF TRANSPORTATION
FEDERAL HIGHWAY ADMINISTRATION
EASTERN FEDERAL LANDS HIGHWAY DIVISION
STERLING, VIRGINIA

NATCHEZ TRACE PARKWAY

RAMP TO MS HWY 32 PLAN (MP 239)

0 40 80
SCALE IN FEET

8/27/2007 3:54:15 PM M:\Projects\natr\3d30e12\proj_dev\CADD\E-natr3d30e12_ppdgn

NPS NO.	REG	STATE	PROJECT	SHEET NO.
604 / 42,994	SE	MS	PRA-NATR 3D30, E12	E-2

NOTES:

1. Provide pavement overlay tie-ins to sideroads utilizing Detail E401-A.
2. Parkway shown not to scale.
3. Ensure positive drainage on all paved areas once paving is complete (0.5% min. slope).
4. Replace all striping in existing locations, as approved by the CO.

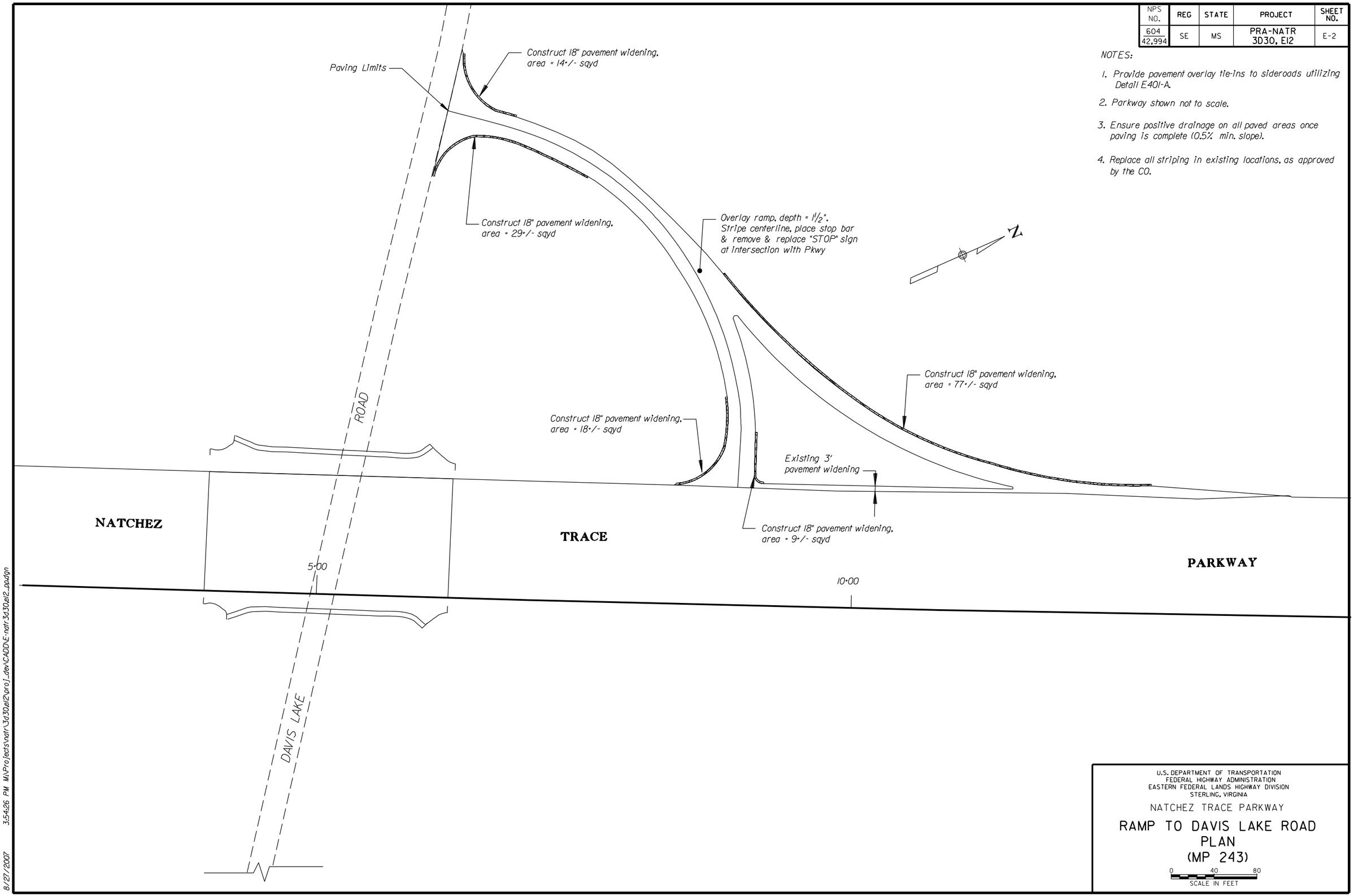

U.S. DEPARTMENT OF TRANSPORTATION
FEDERAL HIGHWAY ADMINISTRATION
EASTERN FEDERAL LANDS HIGHWAY DIVISION
STERLING, VIRGINIA

NATCHEZ TRACE PARKWAY

RAMP TO DAVIS LAKE ROAD PLAN (MP 243)

0 40 80
SCALE IN FEET

8/27/2007 3:54:26 PM M:\Projects\natr\3d30el2\proj_dir\CADD\E-natr-3d30el2_ppdgn

NPS NO.	REG	STATE	PROJECT	SHEET NO.
604 / 42,994	SE	MS	PRA-NATR 3D30, E12	E-3

NOTES:

1. Provide pavement overlay tie-ins to sideroads utilizing Detail E401-A.
2. Parkway shown not to scale.
3. Ensure positive drainage on all paved areas once paving is complete (0.5% min. slope).
4. Replace all striping in existing locations, as approved by the CO.

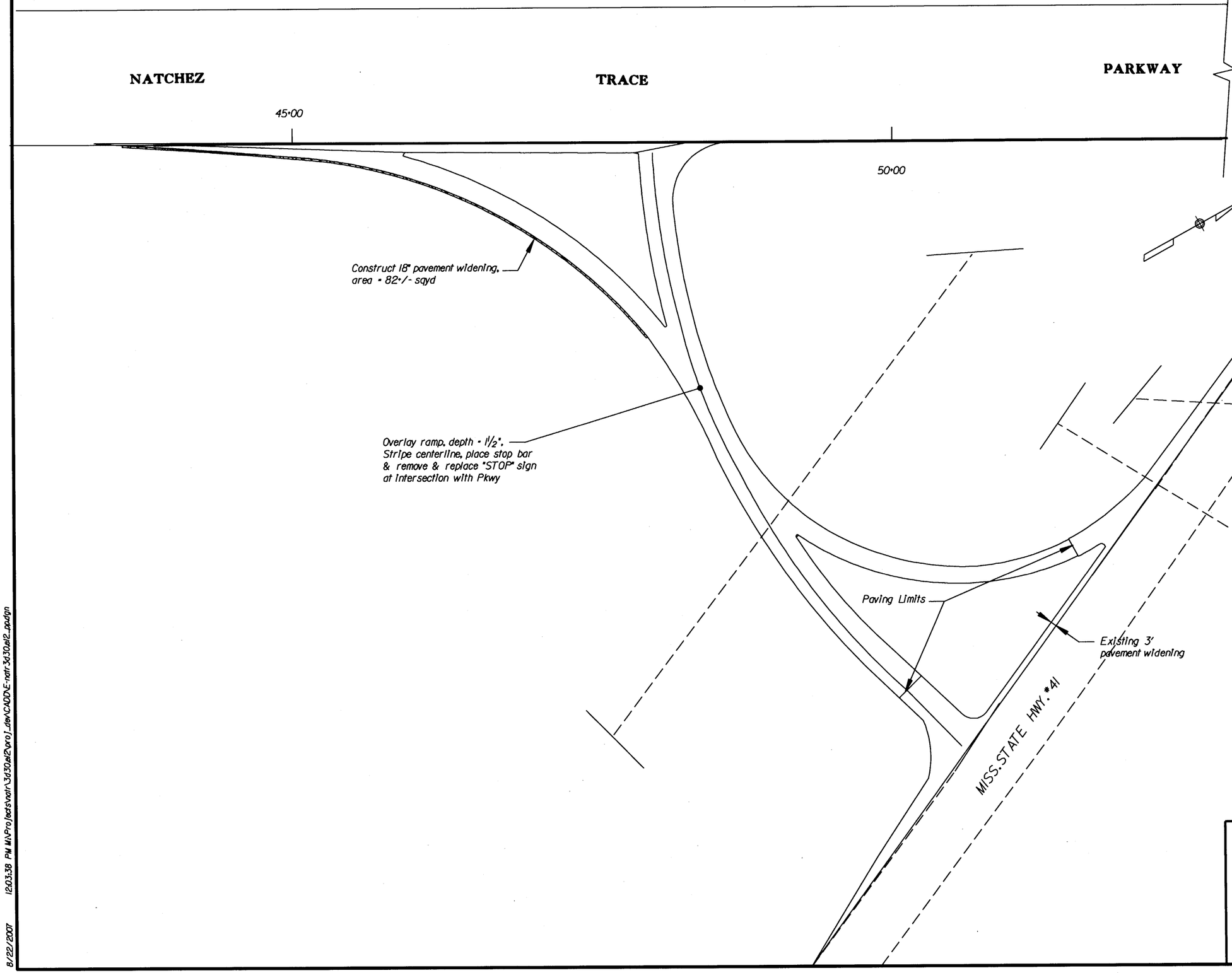

U.S. DEPARTMENT OF TRANSPORTATION
FEDERAL HIGHWAY ADMINISTRATION
EASTERN FEDERAL LANDS HIGHWAY DIVISION
STERLING, VIRGINIA

NATCHEZ TRACE PARKWAY

RAMP TO MS HWY 41
PLAN
(MP 246)

0 40 80
SCALE IN FEET

8/22/2007 12:03:38 PM M:\Projects\natr\3d30,e12\proj_dev\CADD\E-natr3d30,e12_pp.dgn

NPS NO.	REG	STATE	PROJECT	SHEET NO.
604 / 42,994	SE	MS	PRA-NATR 3D30, E12	E-4

NOTES:

1. Provide pavement overlay tie-ins to sideroads utilizing Detail E401-A.
2. Parkway shown not to scale.
3. Ensure positive drainage on all paved areas once paving is complete (0.5% min. slope).
4. Replace all striping in existing locations, as approved by the CO.

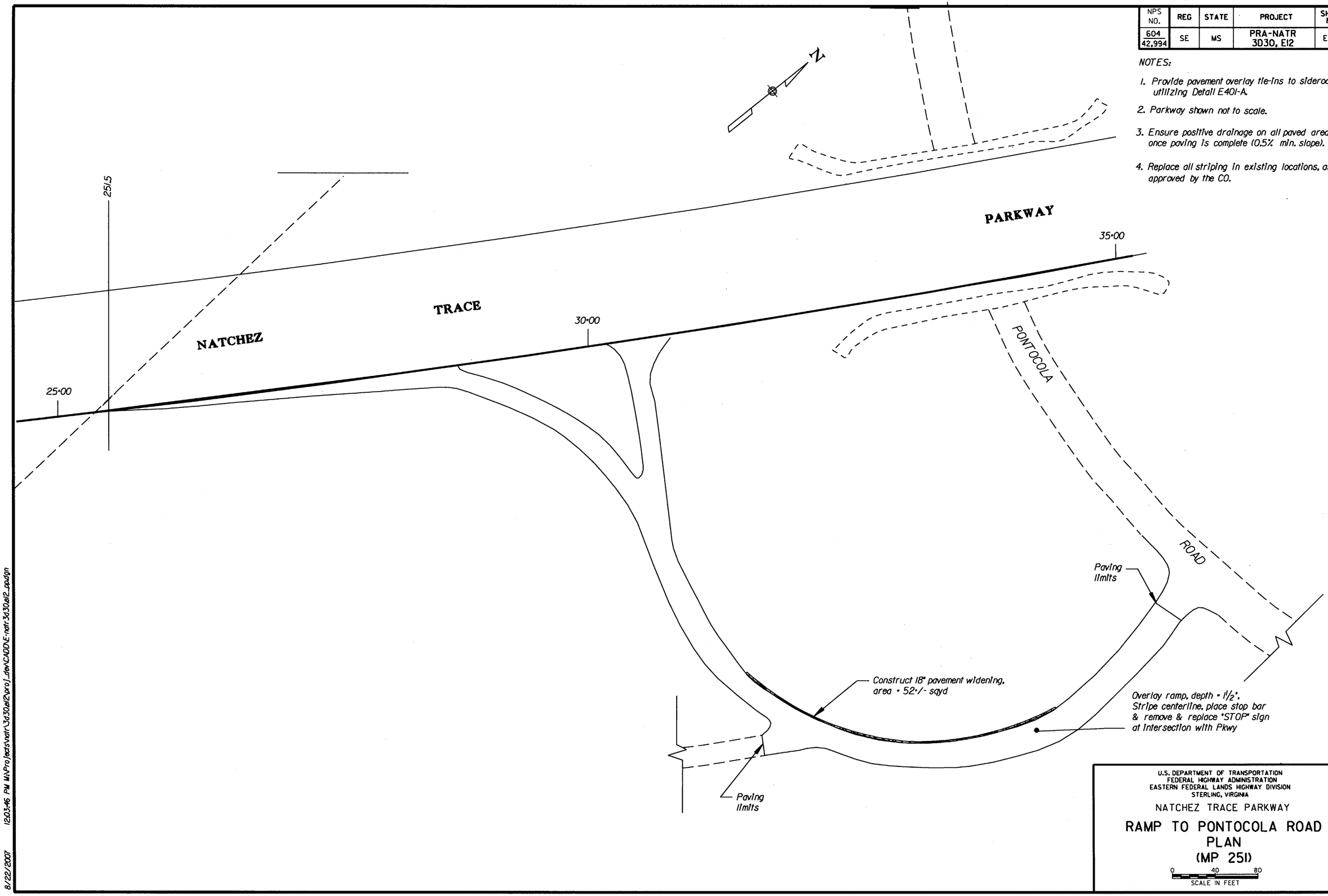

U.S. DEPARTMENT OF TRANSPORTATION
FEDERAL HIGHWAY ADMINISTRATION
EASTERN FEDERAL LANDS HIGHWAY DIVISION
STERLING, VIRGINIA

NATCHEZ TRACE PARKWAY

RAMP TO PONTOCOLA ROAD PLAN (MP 251)

0 40 80
SCALE IN FEET

8/22/2007 12:03:46 PM M:\Projects\natr\3d30el2\proj_dev\CADD\E-natr3d30el2_ppdgn

NPS NO.	REG	STATE	PROJECT	SHEET NO.
604 / 42,994	SE	MS	PRA-NATR 3D30, E12	E-5

NOTES:

1. Provide pavement overlay tie-ins to sideroads utilizing Detail E401-A.
2. Parkway shown not to scale.
3. Ensure positive drainage on all paved areas once paving is complete (0.5% min. slope).
4. Replace all striping in existing locations, as approved by the CO.

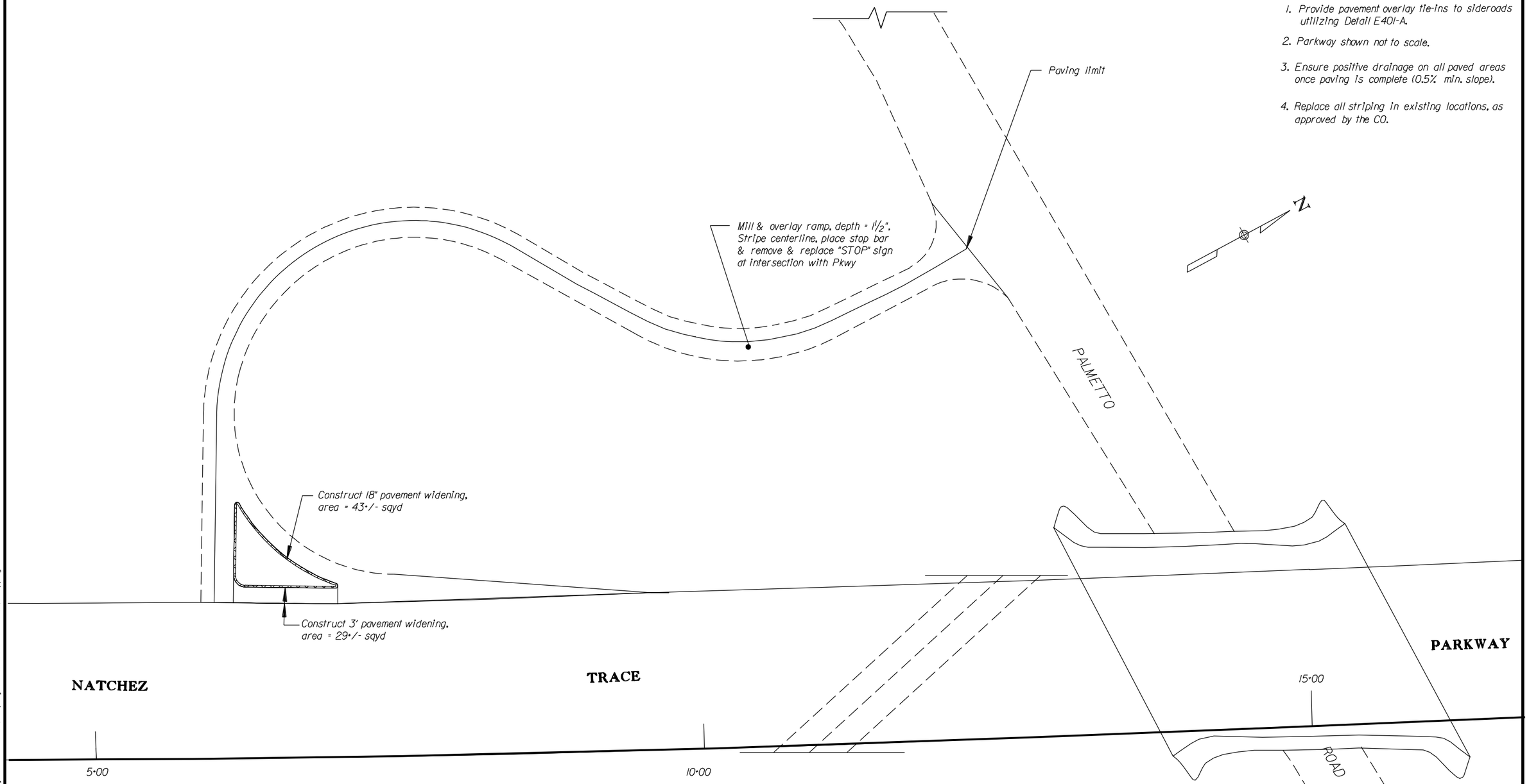

U.S. DEPARTMENT OF TRANSPORTATION
FEDERAL HIGHWAY ADMINISTRATION
EASTERN FEDERAL LANDS HIGHWAY DIVISION
STERLING, VIRGINIA

NATCHEZ TRACE PARKWAY

RAMP TO PALMETTO ROAD PLAN (MP 255)

0 40 80
SCALE IN FEET

8/27/2007 3:53:34 PM M:\Projects\natr\3d30el2\proj_dev\CADD\E-natr3d30el2_pp.dgn

NPS NO.	REG	STATE	PROJECT	SHEET NO.
604 / 42,994	SE	MS	PRA-NATR 3D30, E12	E-6

NOTES:

1. Provide pavement overlay tie-ins to sideroads utilizing Detail E401-A.
2. Parkway shown not to scale.
3. Ensure positive drainage on all paved areas once paving is complete (0.5% min. slope).
4. Replace all striping in existing locations, as approved by the CO.

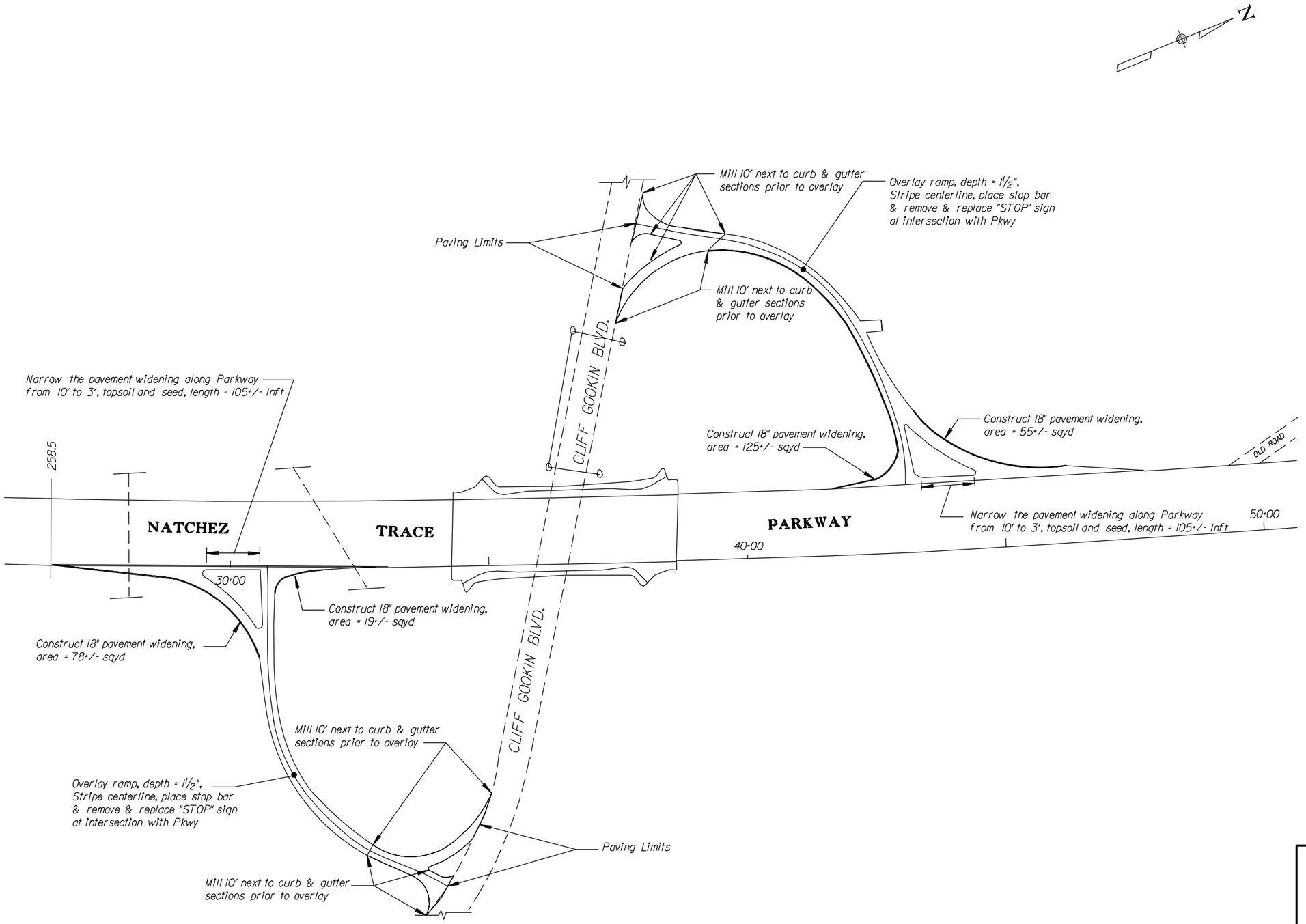

U.S. DEPARTMENT OF TRANSPORTATION
FEDERAL HIGHWAY ADMINISTRATION
EASTERN FEDERAL LANDS HIGHWAY DIVISION
STERLING, VIRGINIA

NATCHEZ TRACE PARKWAY

RAMPS TO CLIFF GOOKIN BLVD. PLAN (MP 258)

0 100 200
SCALE IN FEET

8/27/2007 3:53:07 PM M:\Projects\natr\3d30el2\proj_dev\CADD\E-natr3d30el2_ppdgn

NPS NO.	REG	STATE	PROJECT	SHEET NO.
604 / 42,994	SE	MS	PRA-NATR 3D30, E12	E-7

NOTES:

1. Provide pavement overlay tie-ins to sideroads utilizing Detail E401-A.
2. Parkway shown not to scale.
3. Ensure positive drainage on all paved areas once paving is complete (0.5% min. slope).
4. Replace all striping in existing locations, as approved by the CO.

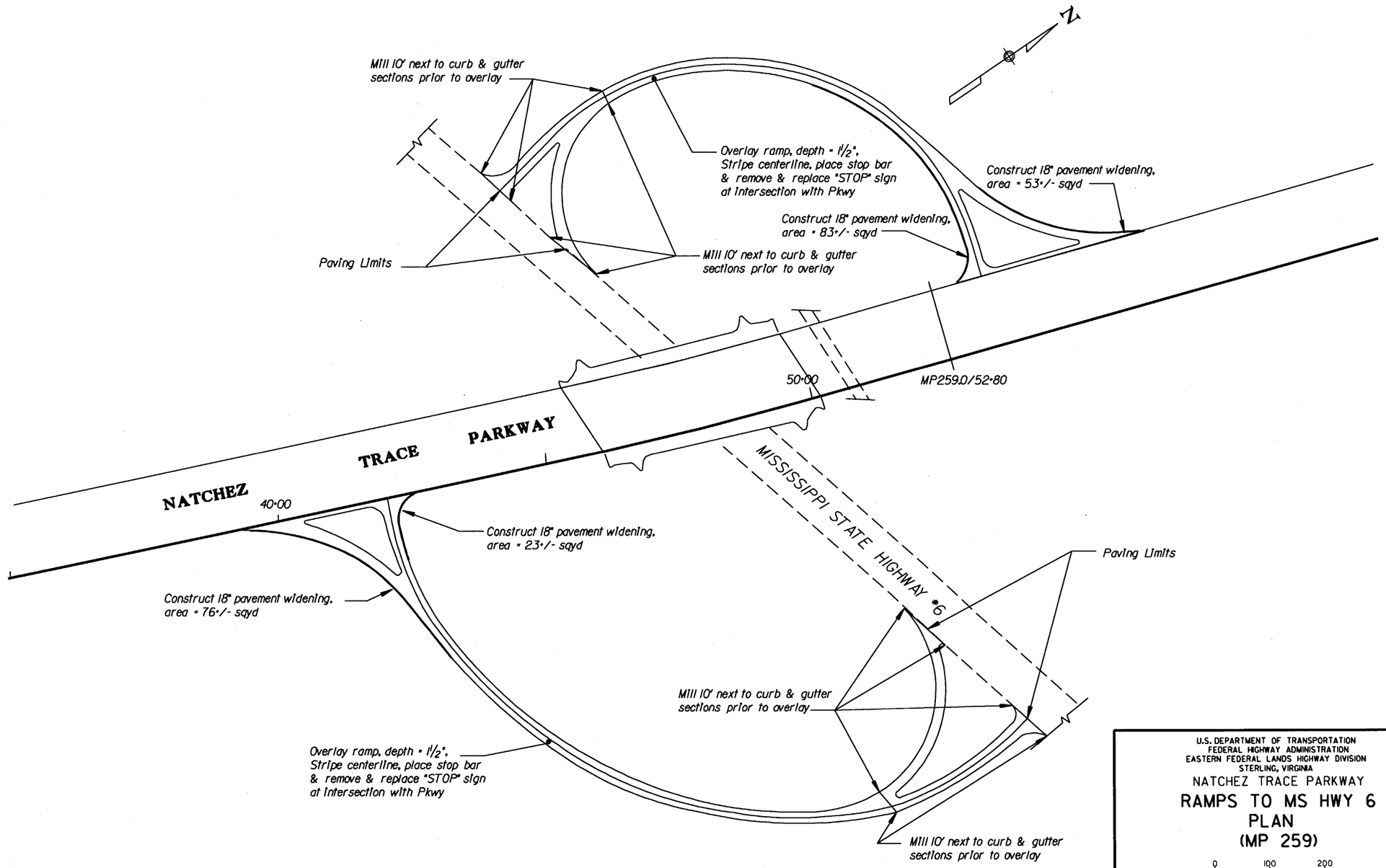

U.S. DEPARTMENT OF TRANSPORTATION
FEDERAL HIGHWAY ADMINISTRATION
EASTERN FEDERAL LANDS HIGHWAY DIVISION
STERLING, VIRGINIA

NATCHEZ TRACE PARKWAY

RAMPS TO MS HWY 6 PLAN (MP 259)

0 100 200
SCALE IN FEET

8/22/2007 12:03:03 PM M:\Projects\natr\3d30\e12\proj_dev\CADD\E-natr3d30e12_pp.dgn

NPS NO.	REG	STATE	PROJECT	SHEET NO.
604 / 42,994	SE	MS	PRA-NATR 3D30, E12	E-8

NOTES:

1. Provide pavement overlay tie-ins to sideroads utilizing Detail E401-A.
2. Parkway shown not to scale.
3. Ensure positive drainage on all paved areas once paving is complete (0.5% min. slope).
4. Replace all striping in existing locations, as approved by the CO.

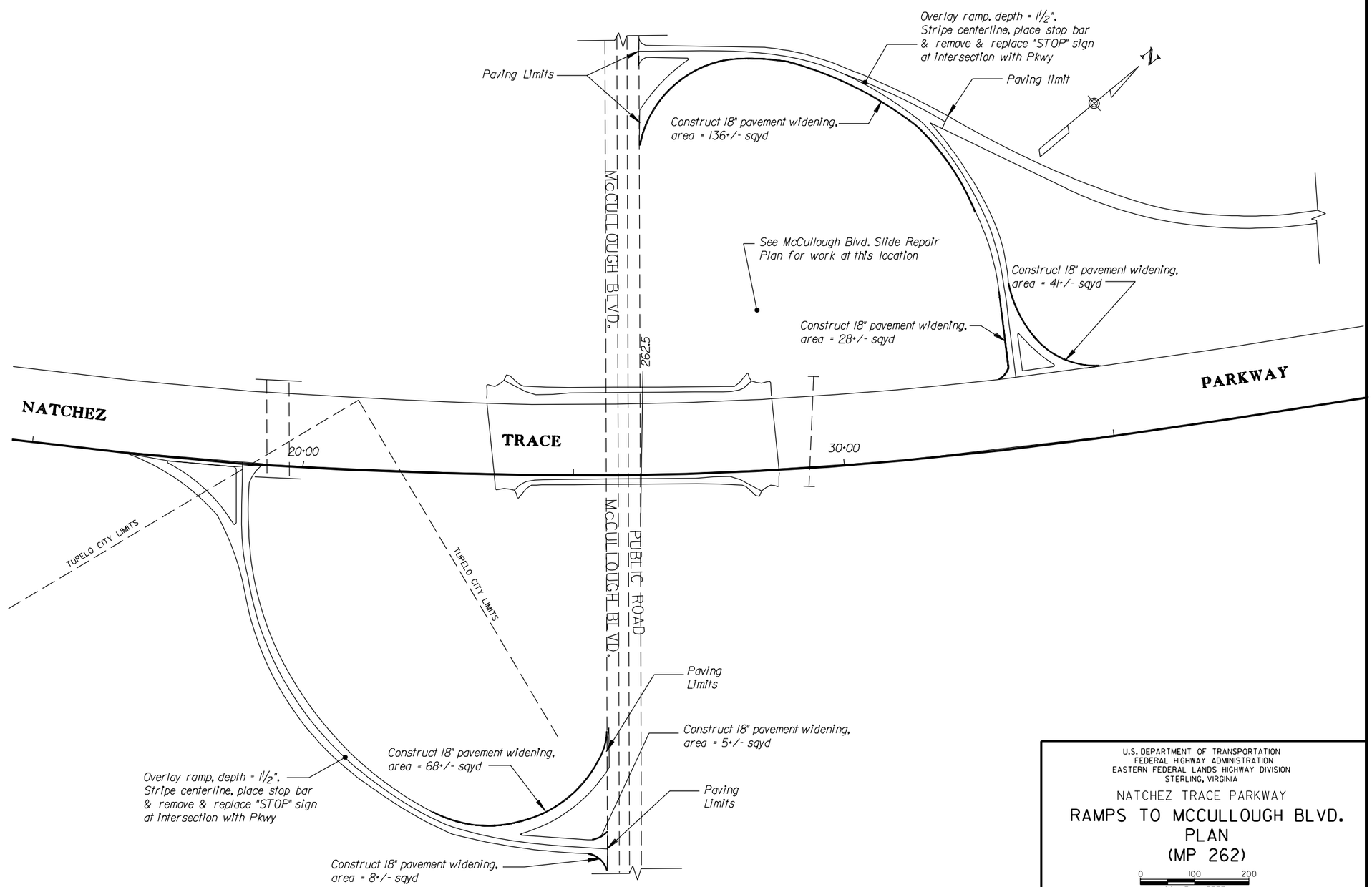

U.S. DEPARTMENT OF TRANSPORTATION
FEDERAL HIGHWAY ADMINISTRATION
EASTERN FEDERAL LANDS HIGHWAY DIVISION
STERLING, VIRGINIA

NATCHEZ TRACE PARKWAY

RAMPS TO MCCULLOUGH BLVD. PLAN (MP 262)

0 100 200
SCALE IN FEET

8/27/2007 3:52:41 PM M:\Projects\natr\3d30e12\proj_dgn\CADD\E-natr-3d30e12_pp.dgn

NPS NO.	REG	STATE	PROJECT	SHEET NO.
604 / 42,994	SE	MS	PRA-NATR 3D30, E12	E-9

NOTES:

1. Provide pavement overlay tie-ins to sideroads utilizing Detail E401-A.
2. Parkway shown not to scale.
3. Ensure positive drainage on all paved areas once paving is complete (0.5% min. slope).
4. Replace all striping in existing locations, as approved by the CO.

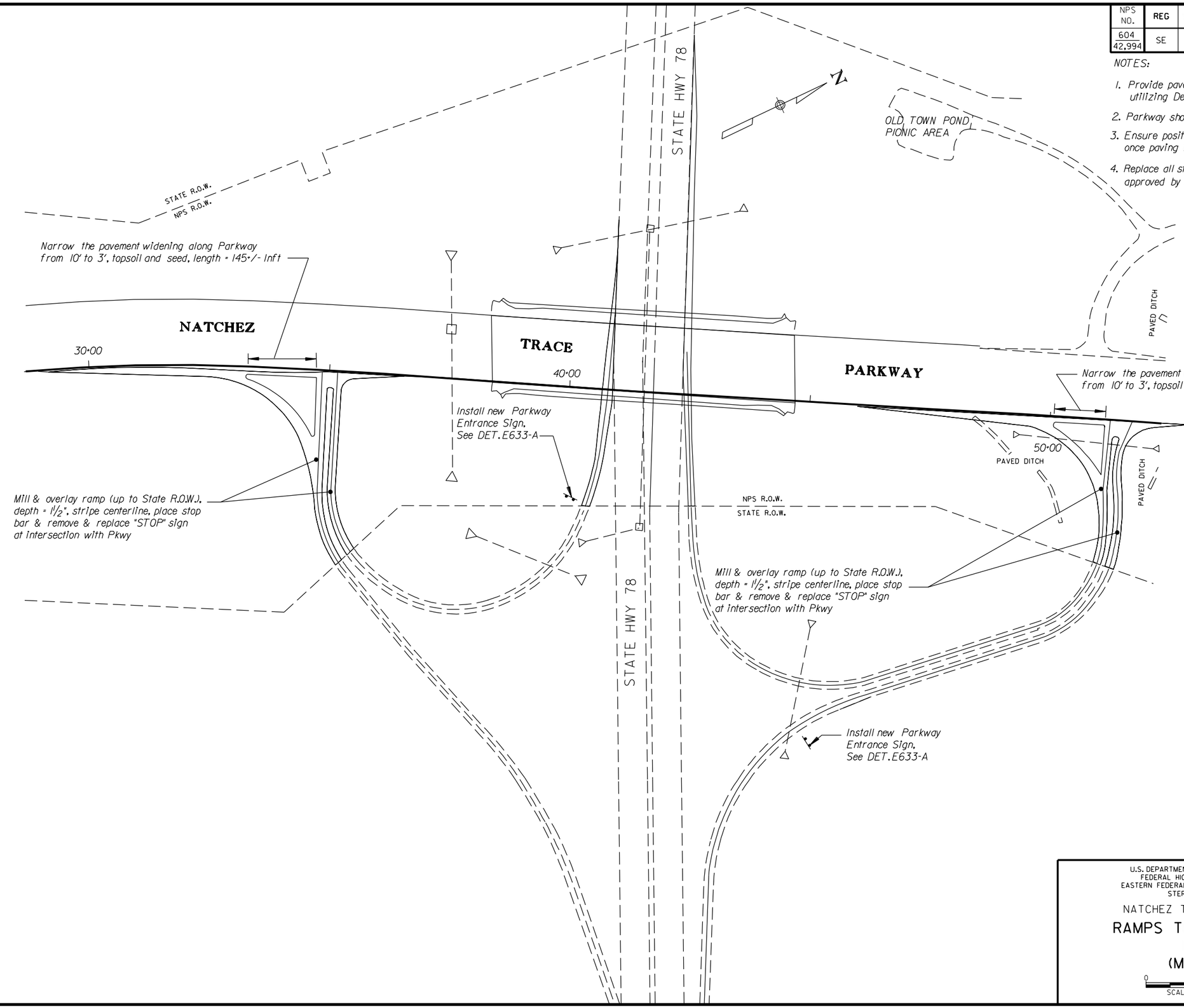

U.S. DEPARTMENT OF TRANSPORTATION
FEDERAL HIGHWAY ADMINISTRATION
EASTERN FEDERAL LANDS HIGHWAY DIVISION
STERLING, VIRGINIA

NATCHEZ TRACE PARKWAY

RAMPS TO MS HWY 78 PLAN (MP 263)

0 100 200
SCALE IN FEET

8/27/2007 3:51:48 PM M:\Projects\natr\3d30el2\proj_dev\CADD\E-natr3d30el2_pp.dgn

NPS NO.	REG	STATE	PROJECT	SHEET NO.
604 / 42,994	SE	MS	PRA-NATR 3D30, E12	E-10

NOTES:

1. Provide pavement overlay tie-ins to sideroads utilizing Detail E401-A.
2. Parkway shown not to scale.
3. Ensure positive drainage on all paved areas once paving is complete (0.5% min. slope).
4. Replace all striping in existing locations, as approved by the CO.

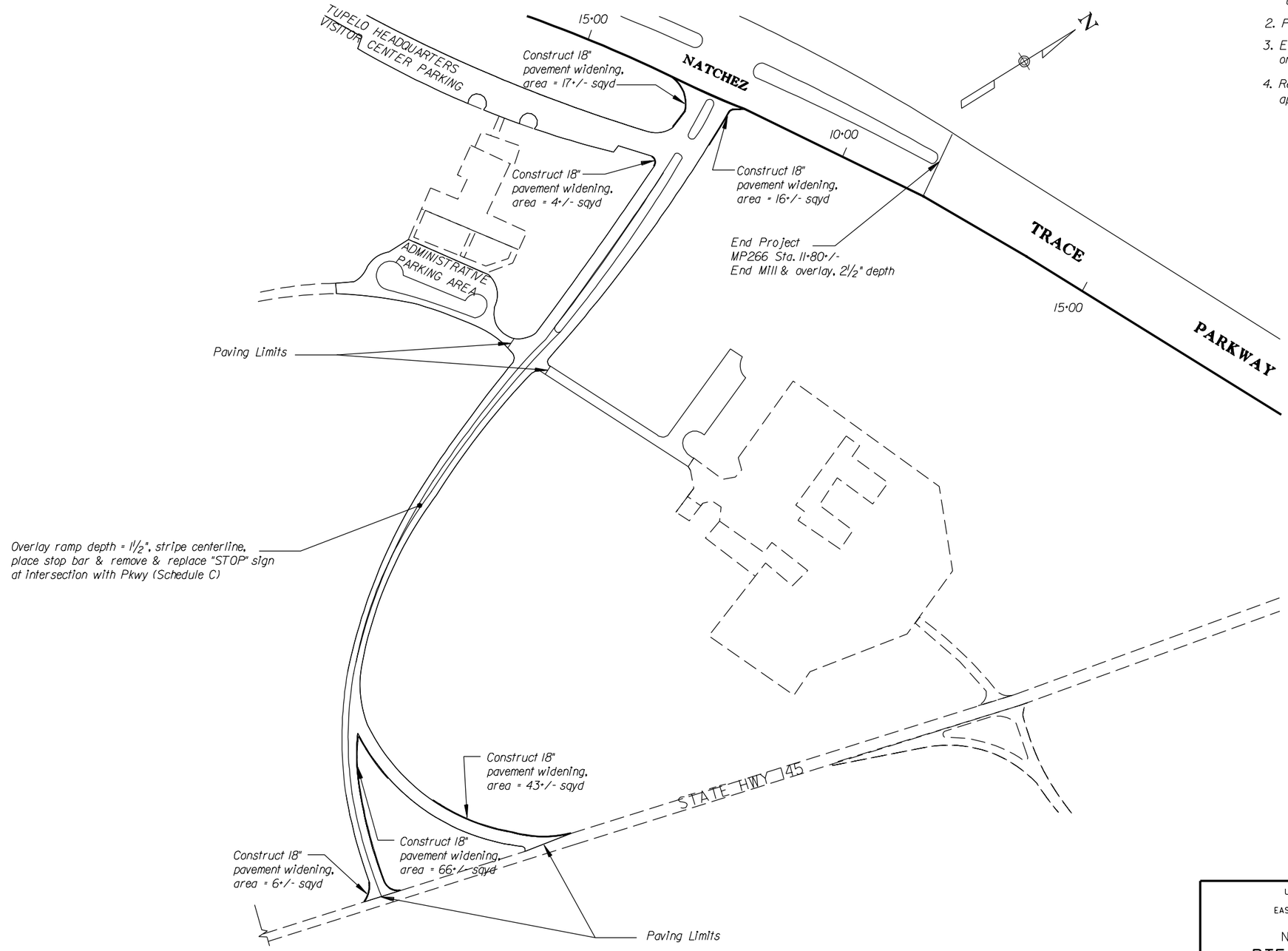

U.S. DEPARTMENT OF TRANSPORTATION
FEDERAL HIGHWAY ADMINISTRATION
EASTERN FEDERAL LANDS HIGHWAY DIVISION
STERLING, VIRGINIA

NATCHEZ TRACE PARKWAY

RTE. 145 CONNECTOR RAMP PLAN (MP 266)

0 100 200
SCALE IN FEET

8/27/2007 3:52:10 PM M:\Projects\natr\3d30el2\proj_dev\CADD\E-natr3d30el2_pp.dgn

NPS NO.	REG	STATE	PROJECT	SHEET NO.
604 / 42,994	SE	MS	PRA-NATR 3D30,E12	F-1

NOTES:

1. Ensure positive drainage in all parking areas once paving is complete (0.5% min. slope).
2. Replace all striping in existing locations, as approved by the CO.
3. Reestablish a 6" curb reveal along all curb sections.
4. Transition between milling depths & provide pavement overlay tie-ins in accordance with Detail E401-A.

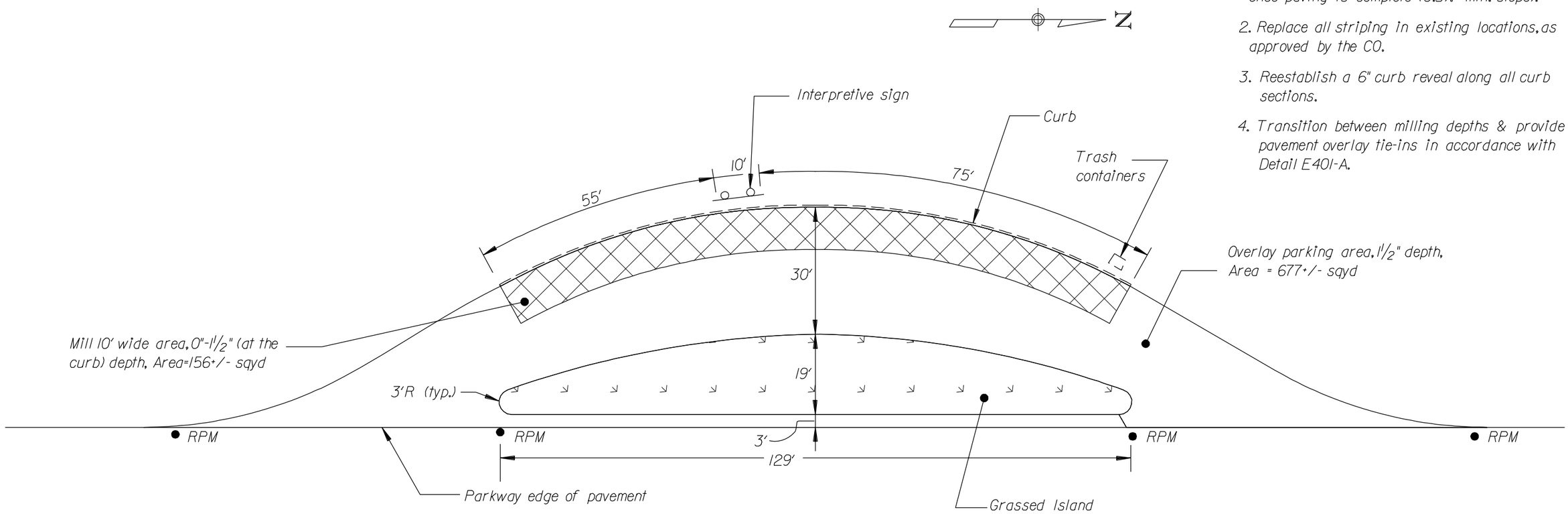

Not to Scale

U.S. DEPARTMENT OF TRANSPORTATION
FEDERAL HIGHWAY ADMINISTRATION
EASTERN FEDERAL LANDS HIGHWAY DIVISION
STERLING, VIRGINIA

NATCHEZ TRACE PARKWAY

PARKING AREA CONSTRUCTION PLANS

CHICKASAW AGENCY-
MP 241-STA. 22+00-24+00+/-

8/27/2007 3:36:51 PM M:\Projects\natr\3d30el2\proj_dev\CADD\F-natr3d30el2_pp.dgn

NPS NO.	REG	STATE	PROJECT	SHEET NO.
604 / 42,994	SE	MS	PRA-NATR 3D30.E12	F-2

NOTES:

1. Ensure positive drainage in all parking areas once paving is complete (0.5% min. slope).
2. Replace all striping in existing locations, as approved by the CO.
3. Reestablish a 6" curb reveal along all curb sections.
4. Transition between milling depths & provide pavement overlay tie-ins in accordance with Detail E401-A.

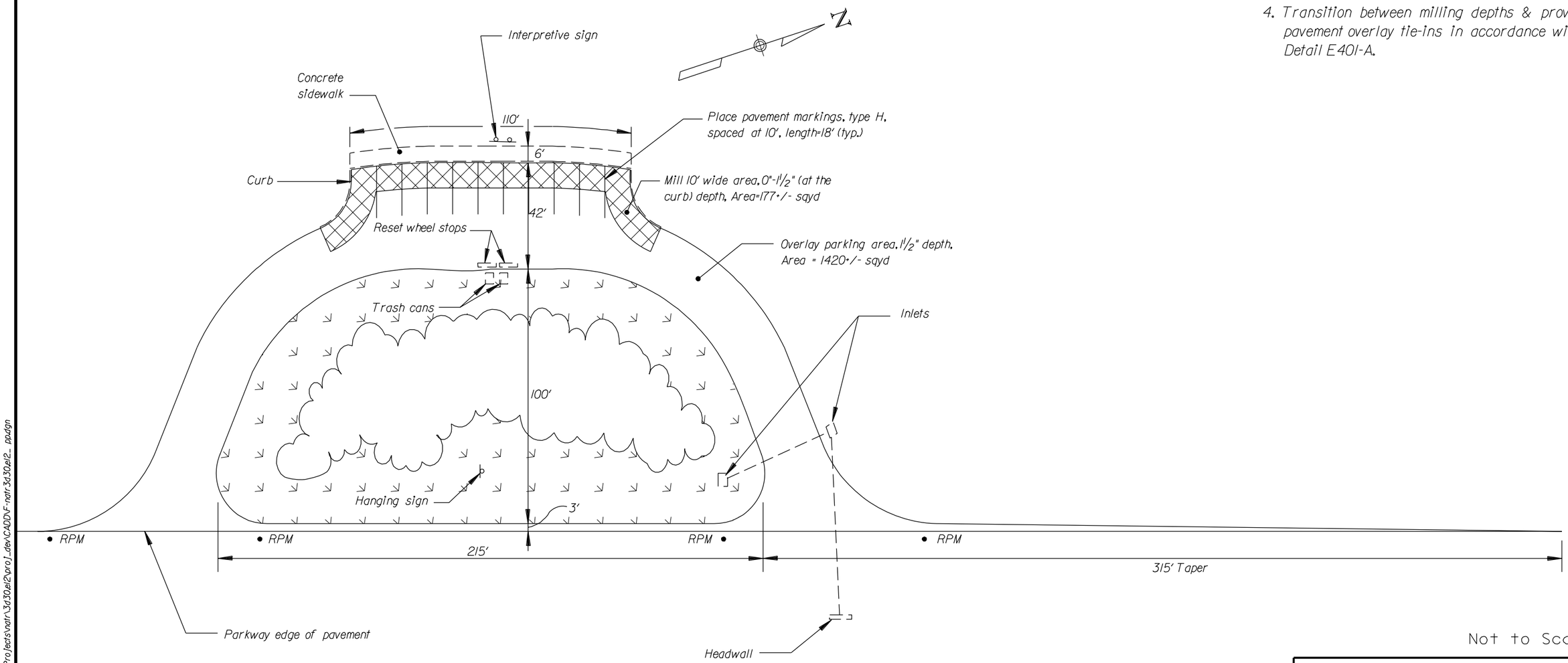

Not to Scale

U.S. DEPARTMENT OF TRANSPORTATION
FEDERAL HIGHWAY ADMINISTRATION
EASTERN FEDERAL LANDS HIGHWAY DIVISION
STERLING, VIRGINIA

NATCHEZ TRACE PARKWAY

PARKING AREA CONSTRUCTION PLANS

HERNANDO DESOTO-
MP 243-STA. 17+00-22+00+/-

8/27/2007 3:38:05 PM M:\Projects\natr\3d30.el2\proj_dev\CADD\F-natr-3d30.el2_ pa.dgn

NPS NO.	REG	STATE	PROJECT	SHEET NO.
604 / 42,994	SE	MS	PRA-NATR 3D30.E12	F-3

NOTES:

1. Ensure positive drainage in all parking areas once paving is complete (0.5% min. slope).
2. Replace all striping in existing locations, as approved by the CO.
3. Reestablish a 6" curb reveal along all curb sections.
4. Transition between milling depths & provide pavement overlay tie-ins in accordance with Detail E401-A.

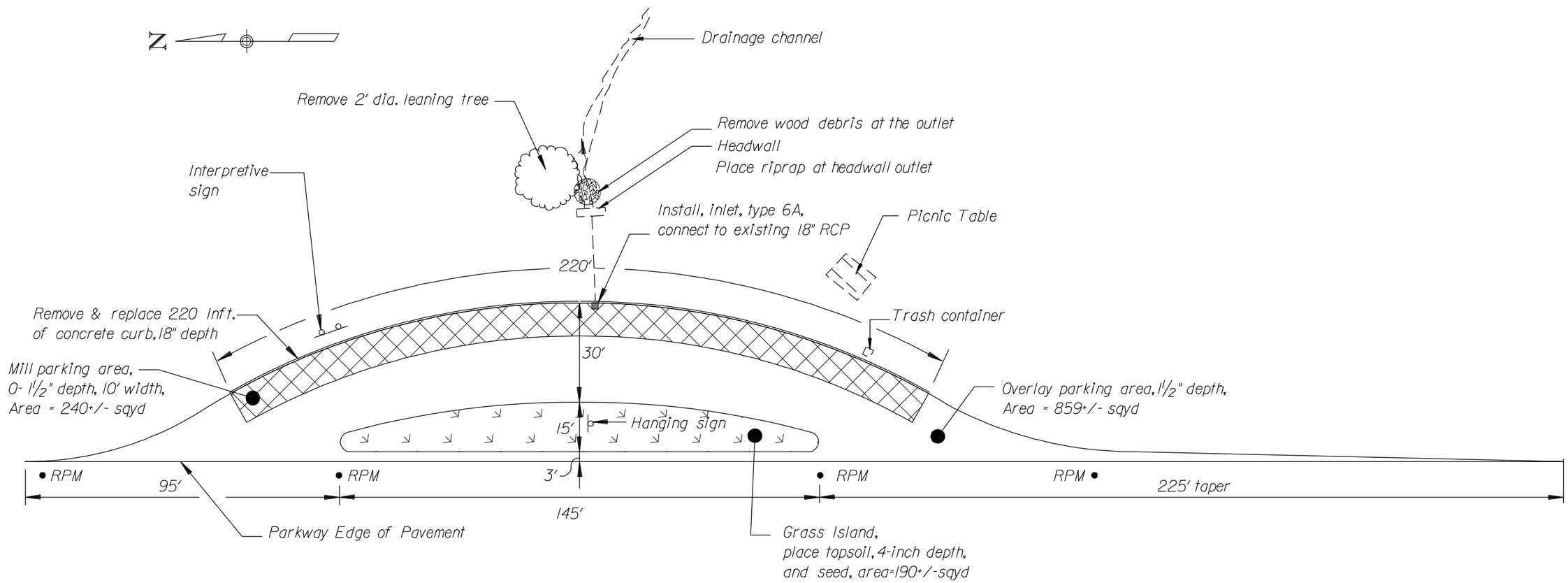

Not to Scale

U.S. DEPARTMENT OF TRANSPORTATION
FEDERAL HIGHWAY ADMINISTRATION
EASTERN FEDERAL LANDS HIGHWAY DIVISION
STERLING, VIRGINIA

NATCHEZ TRACE PARKWAY

PARKING AREA
CONSTRUCTION PLANS

MONROE MISSION-
MP 245-STA. 31+50-34+50+/-

8/27/2007 3:37:21 PM M:\Projects\natr\3d30el2\proj_de\CADD\F-natr3d30el2_pp.dgn

NPS NO.	REG	STATE	PROJECT	SHEET NO.
604 / 42,994	SE	MS	PRA-NATR 3D30,E12	F-4

NOTES:

1. Ensure positive drainage in all parking areas once paving is complete (0.5% min. slope).
2. Replace all striping in existing locations, as approved by the CO.
3. Reestablish a 6" curb reveal along all curb sections.
4. Transition between milling depths & provide pavement overlay tie-ins in accordance with Detail E401-A.

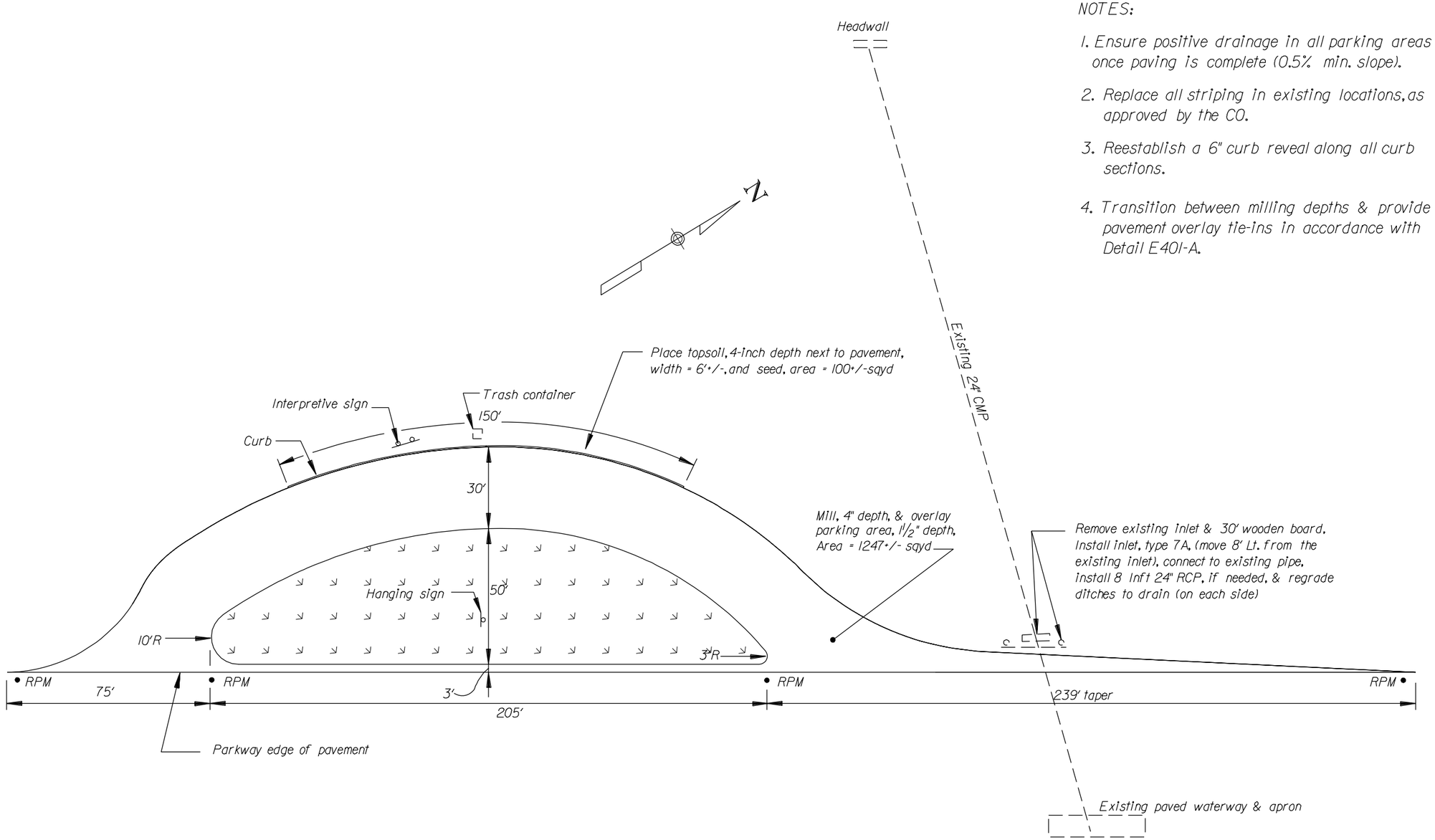

Not to Scale

U.S. DEPARTMENT OF TRANSPORTATION
FEDERAL HIGHWAY ADMINISTRATION
EASTERN FEDERAL LANDS HIGHWAY DIVISION
STERLING, VIRGINIA

NATCHEZ TRACE PARKWAY

PARKING AREA CONSTRUCTION PLANS

TOCKSHISH

MP 249-STA. 31+50-35+00+/-

8/27/2007 3:37:43 PM M:\Projects\natr\3d30el2\proj_dev\CADD\F-natr3d30el2_pa.dgn

NPS NO.	REG	STATE	PROJECT	SHEET NO.
604 / 42,994	SE	MS	PRA-NATR 3D30.E12	F-5

NOTES:

1. Ensure positive drainage in all parking areas once paving is complete (0.5% min. slope).
2. Replace all striping in existing locations, as approved by the CO.
3. Reestablish a 6" curb reveal along all curb sections.
4. Transition between milling depths & provide pavement overlay tie-ins in accordance with Detail E401-A.

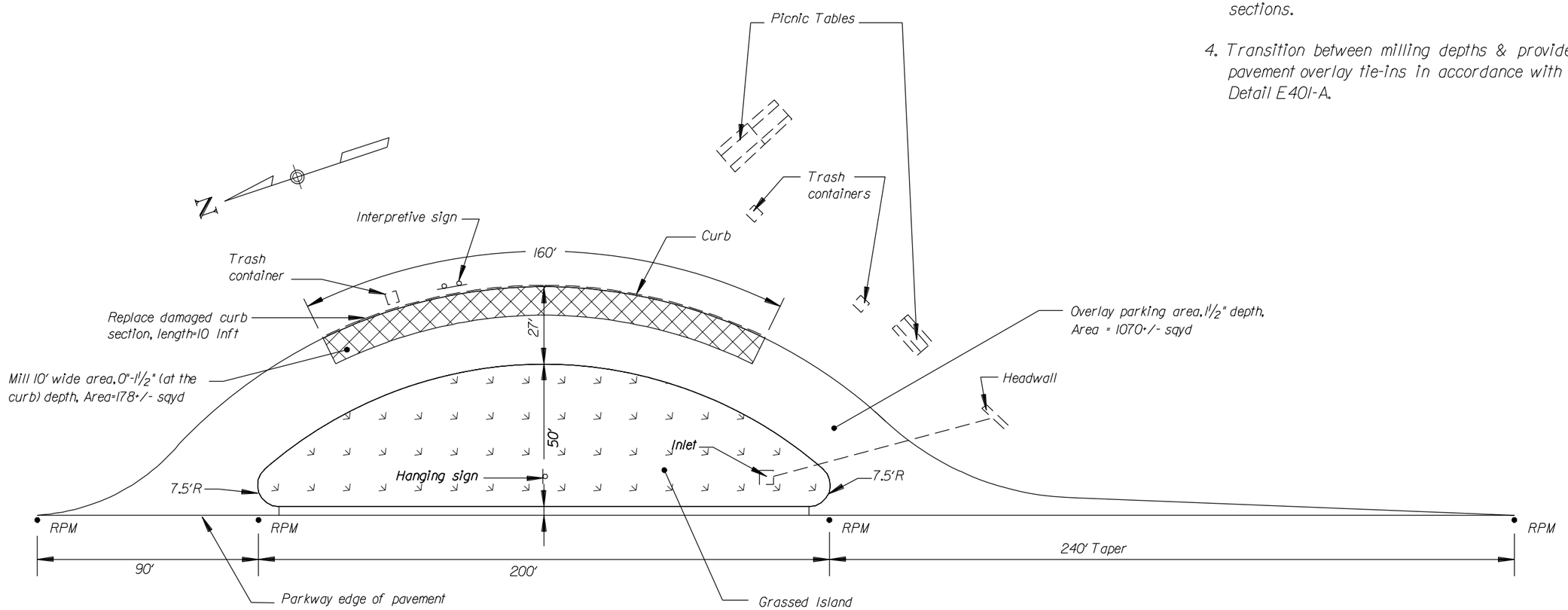

Not to Scale

U.S. DEPARTMENT OF TRANSPORTATION
FEDERAL HIGHWAY ADMINISTRATION
EASTERN FEDERAL LANDS HIGHWAY DIVISION
STERLING, VIRGINIA

NATCHEZ TRACE PARKWAY

PARKING AREA
CONSTRUCTION PLANS

CHICKASAW COUNCIL HOUSE-
MP 251-5+00-7+50+/-

8/27/2007 3:38:28 PM M:\Projects\natr\3d30.el2\proj_dev\CADD\F-natr3d30el2_ppdgn

NPS NO.	REG	STATE	PROJECT	SHEET NO.
604 / 42,994	SE	MS	PRA-NATR 3D30,E12	F-6

NOTES:

1. Ensure positive drainage in all parking areas once paving is complete (0.5% min. slope).
2. Replace all striping in existing locations, as approved by the CO.
3. Reestablish a 6" curb reveal along all curb sections.
4. Transition between milling depths & provide pavement overlay tie-ins in accordance with Detail E401-A.

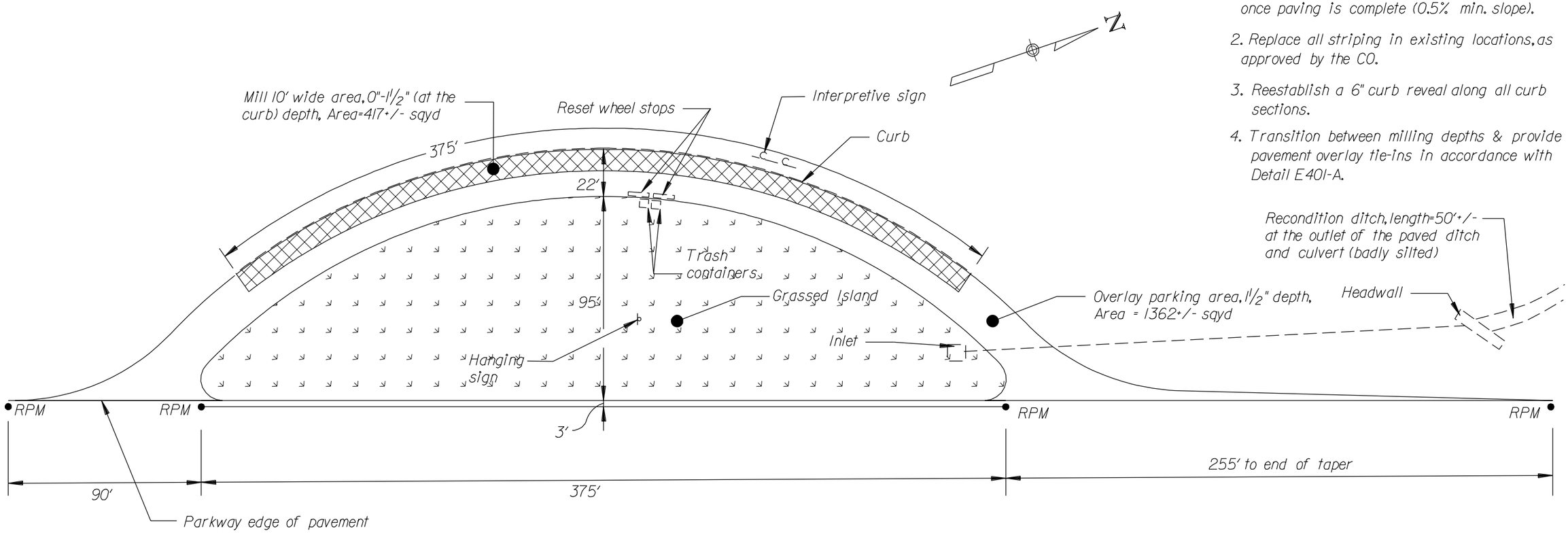

Not to Scale

U.S. DEPARTMENT OF TRANSPORTATION
FEDERAL HIGHWAY ADMINISTRATION
EASTERN FEDERAL LANDS HIGHWAY DIVISION
STERLING, VIRGINIA

NATCHEZ TRACE PARKWAY

PARKING AREA CONSTRUCTION PLANS

BLACK BELT OVERLOOK
MP 251-STA. 47+50-52+80+/-

8/27/2007 3:38:45 PM M:\Projects\natr\3d30el2\proj_dev\CADD\F-natr-3d30el2_ pa.dgn

NPS NO.	REG	STATE	PROJECT	SHEET NO.
604 / 42,994	SE	MS	PRA-NATR 3D30,E12	F-7

NOTES:

1. Ensure positive drainage in all parking areas once paving is complete (0.5% min. slope).
2. Transition between milling depths & provide pavement overlay tie-ins in accordance with Detail E401-A.

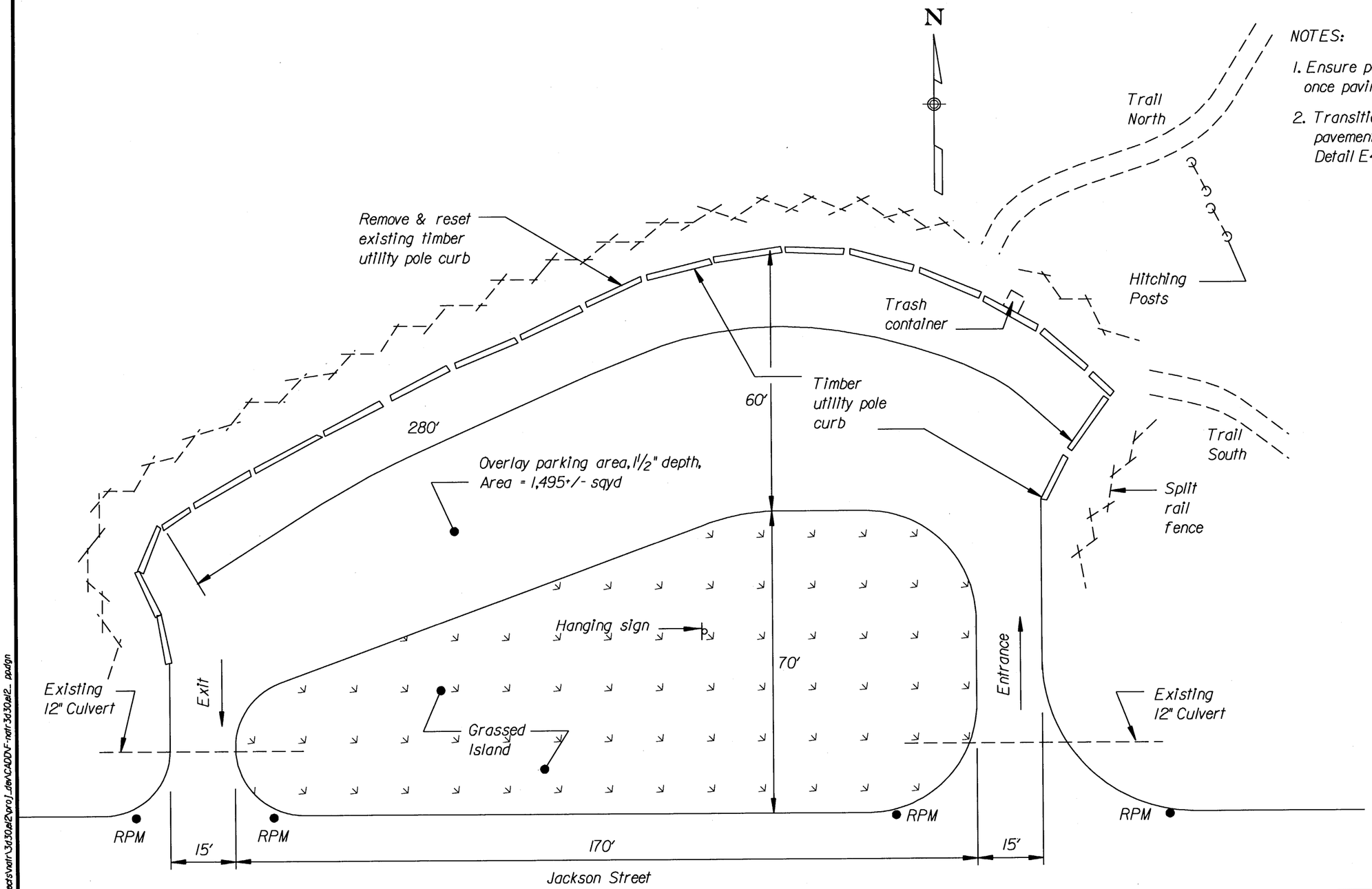

Not to Scale

U.S. DEPARTMENT OF TRANSPORTATION
FEDERAL HIGHWAY ADMINISTRATION
EASTERN FEDERAL LANDS HIGHWAY DIVISION
STERLING, VIRGINIA

NATCHEZ TRACE PARKWAY

PARKING AREA CONSTRUCTION PLANS

HORSETRAIL PARKING AREA
MP 260-STA. 42+50+/-(SCHEDULE D)

8/21/2007 10:49:14 AM M:\Projects\natr\3d30,el2\pro_dev\CADD\F-natr3d30el2_ppdgn

NPS NO.	REG	STATE	PROJECT	SHEET NO.
604 / 42,994	SE	MS	PRA-NATR 3D30,E12	F-8

NOTES:

1. Ensure positive drainage in all parking areas once paving is complete (0.5% min. slope).
2. Replace all striping in existing locations, as approved by the CO.
3. Reestablish a 6" curb reveal along all curb sections.
4. Transition between milling depths & provide pavement overlay tie-ins in accordance with Detail E401-A.

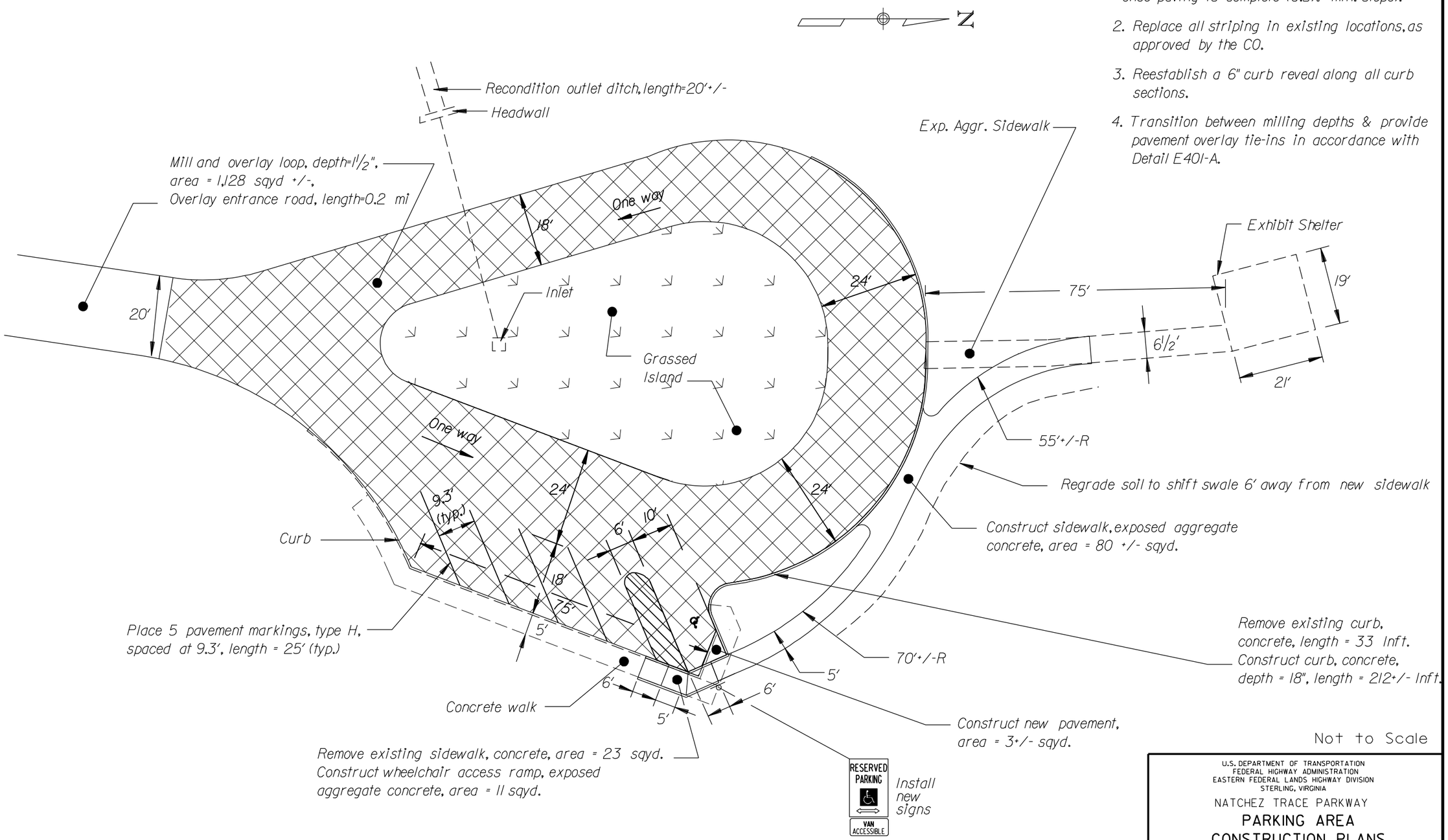

Not to Scale

U.S. DEPARTMENT OF TRANSPORTATION
FEDERAL HIGHWAY ADMINISTRATION
EASTERN FEDERAL LANDS HIGHWAY DIVISION
STERLING, VIRGINIA

NATCHEZ TRACE PARKWAY

PARKING AREA CONSTRUCTION PLANS

CHICKASAW VILLAGE PARKING
MP 261, STA. 41+50+/- LT.

8/27/2007 3:35:41 PM M:\Projects\natr\3d30el2\proj_dev\CADD\F-natr3d30el2_ppdgn

NPS NO.	REG	STATE	PROJECT	SHEET NO.
604 / 42,994	SE	MS	PRA-NATR 3D30,E12	F-9

NOTES:

1. Ensure positive drainage in all parking areas once paving is complete (0.5% min. slope).
2. Replace all striping in existing locations, as approved by the CO.
3. Reestablish a 6" curb reveal along all curb sections.
4. Transition between milling depths & provide pavement overlay tie-ins in accordance with Detail E401-A.

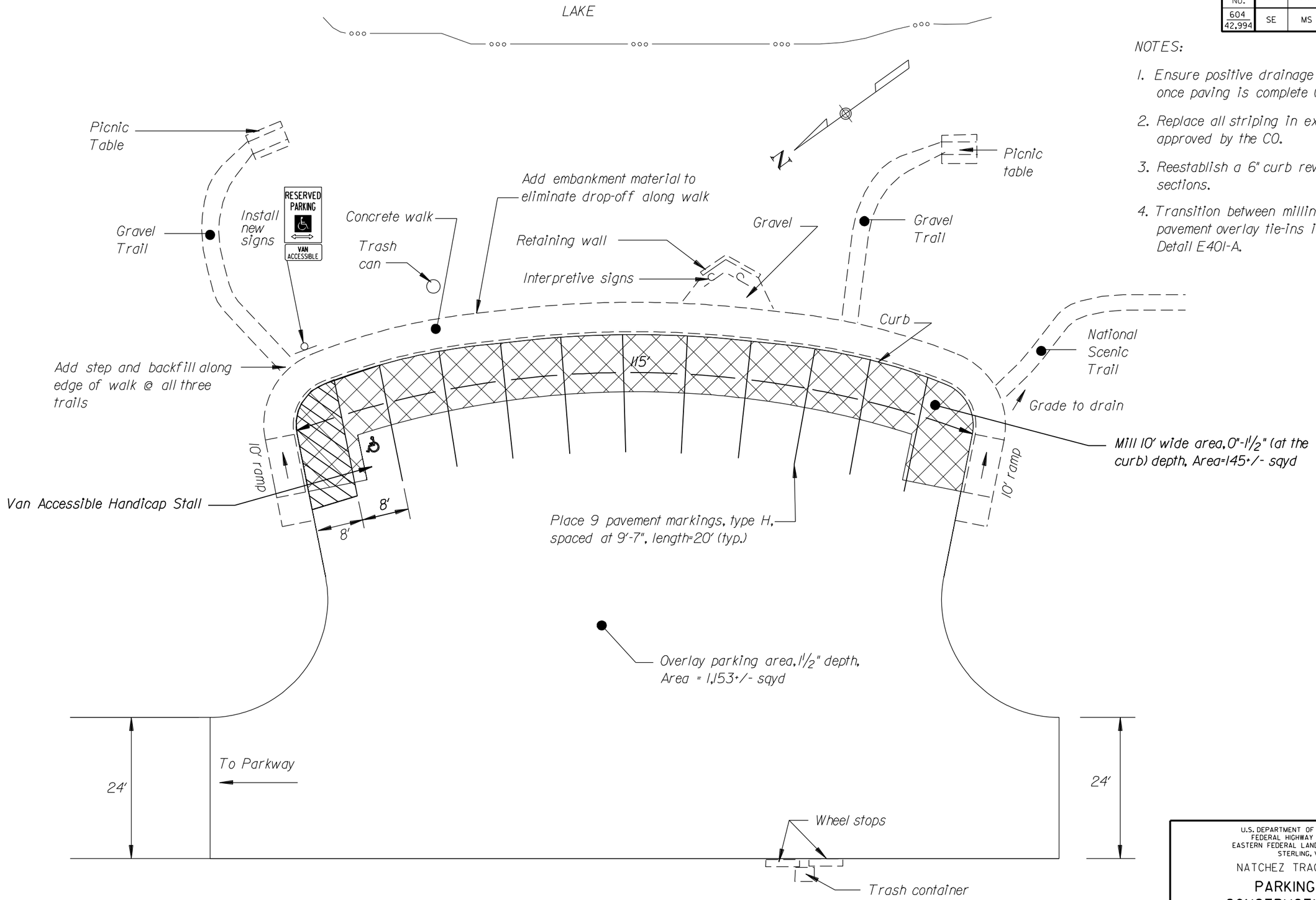

Not to Scale

U.S. DEPARTMENT OF TRANSPORTATION
FEDERAL HIGHWAY ADMINISTRATION
EASTERN FEDERAL LANDS HIGHWAY DIVISION
STERLING, VIRGINIA

NATCHEZ TRACE PARKWAY

PARKING AREA CONSTRUCTION PLANS

OLD TOWN OVERLOOK
MP 263-STA. 50+50+/-LT.

8/27/2007 3:39:42 PM M:\Projects\nat\3d30el2\proj_dev\CADD\F-natr3d30el2_ppdgn

NPS NO.	REG	STATE	PROJECT	SHEET NO.
604 42,994	SE	MS	PRA-NATR 3D30,E12	F-10

NOTES:

1. Ensure positive drainage in all parking areas once paving is complete (0.5% min. slope).
2. Reestablish a 6" curb reveal along all curb sections.
3. Transition between milling depths & provide pavement overlay tie-ins in accordance with Detail E401-A.

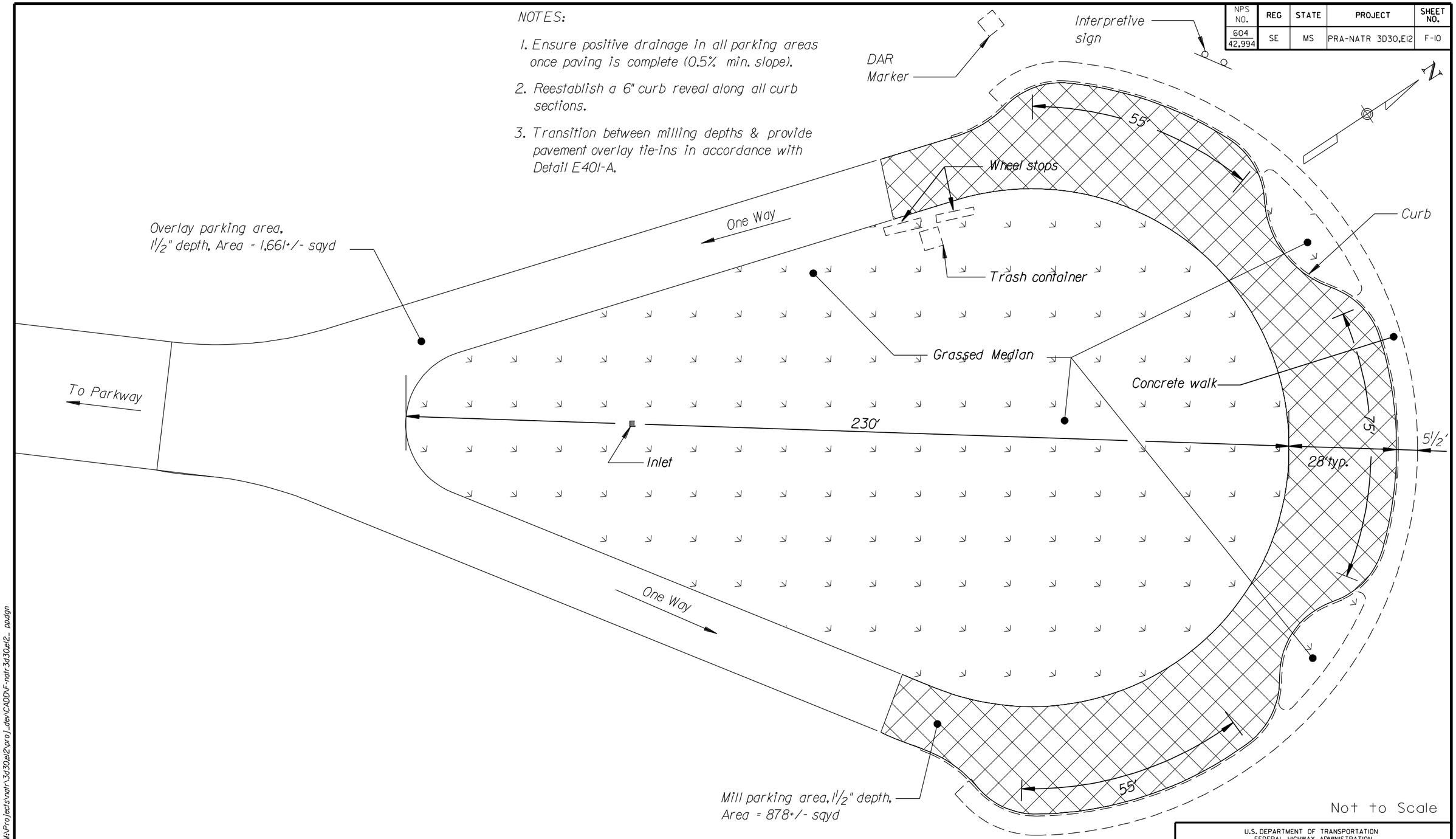

Not to Scale

U.S. DEPARTMENT OF TRANSPORTATION
FEDERAL HIGHWAY ADMINISTRATION
EASTERN FEDERAL LANDS HIGHWAY DIVISION
STERLING, VIRGINIA

NATCHEZ TRACE PARKWAY

PARKING AREA CONSTRUCTION PLANS

OLD TOWN CREEK PARKING OVERLOOK
-MP 263 STA. 50+50+/- LT.

8/27/2007 3:36:21 PM M:\Projects\natr\3d30el2\proj_dev\CAD\F-natr-3d30el2_ pp.dgn

NPS NO.	REG	STATE	PROJECT	SHEET NO.
604 / 42,994	SE	MS	PRA-NATR 3D30, E12	F-11

NOTES:

1. Transition between milling depths & provide pavement overlay tie-ins in accordance with Detail E401-A.

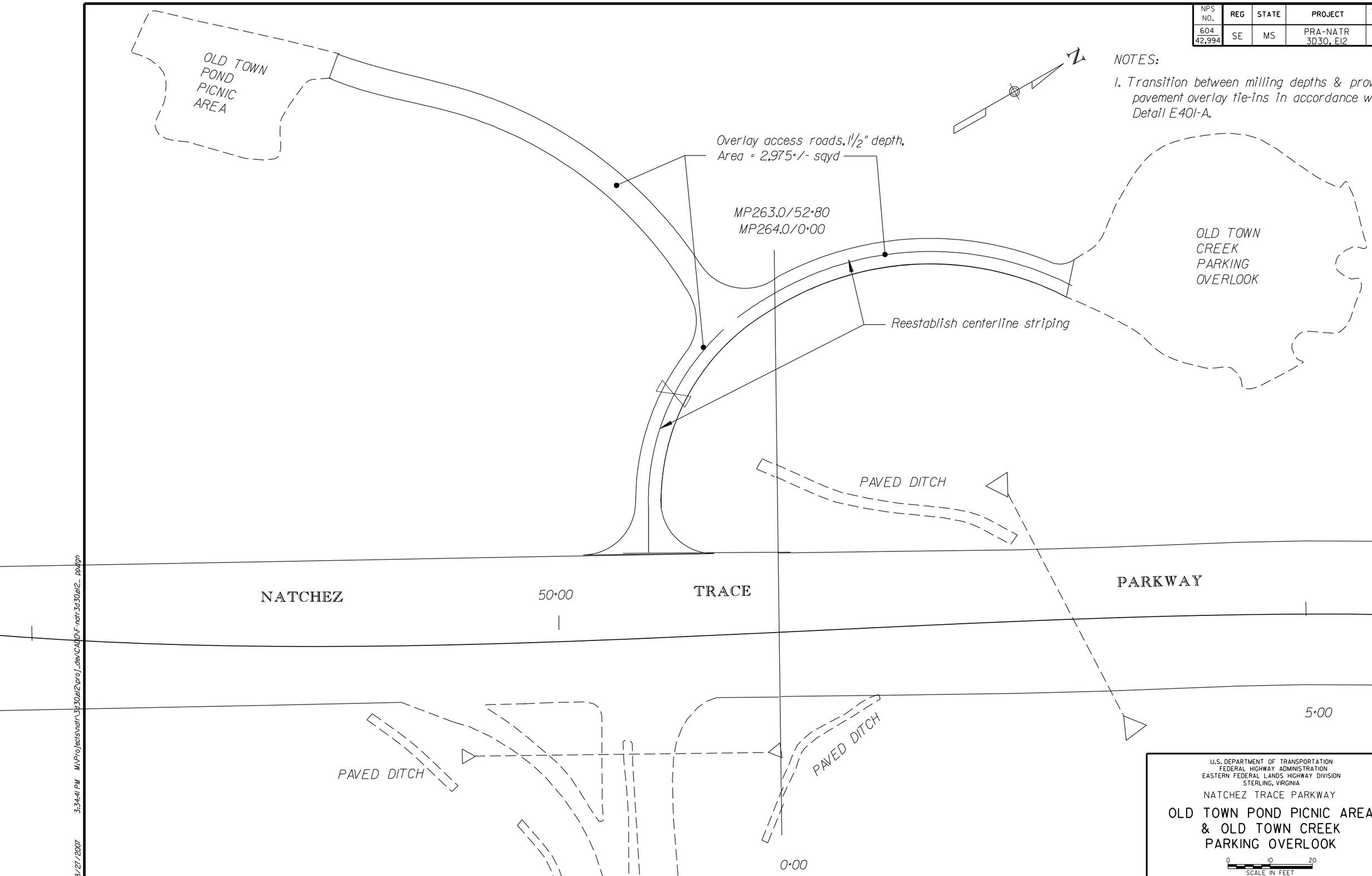

U.S. DEPARTMENT OF TRANSPORTATION
FEDERAL HIGHWAY ADMINISTRATION
EASTERN FEDERAL LANDS HIGHWAY DIVISION
STERLING, VIRGINIA

NATCHEZ TRACE PARKWAY

OLD TOWN POND PICNIC AREA & OLD TOWN CREEK PARKING OVERLOOK

0 10 20
SCALE IN FEET

8/27/2007 3:34:41 PM M:\Projects\natr\3d30el2\proj_dev\CAD\DF-natr3d30el2_pp.dgn

NPS NO.	REG	STATE	PROJECT	SHEET NO.
604 / 42,994	SE	MS	PRA-NATR 3D30,E12	F-12

NOTES:

1. Ensure positive drainage in all parking areas once paving is complete (0.5% min. slope).
2. Reestablish a 6" curb reveal along all curb sections.
3. Transition between milling depths & provide pavement overlay tie-ins in accordance with Detail E401-A.

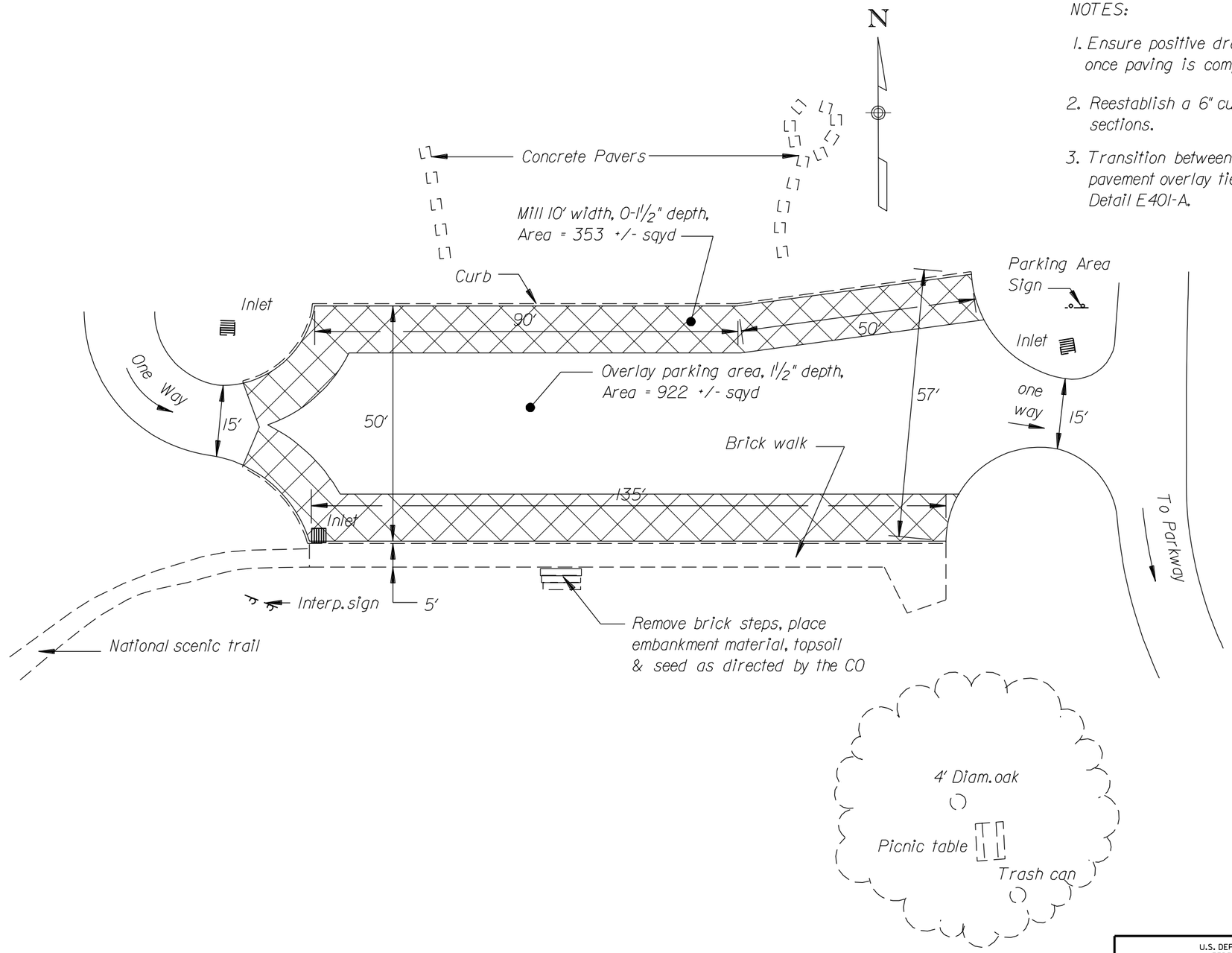

Not to Scale

U.S. DEPARTMENT OF TRANSPORTATION
FEDERAL HIGHWAY ADMINISTRATION
EASTERN FEDERAL LANDS HIGHWAY DIVISION
STERLING, VIRGINIA

NATCHEZ TRACE PARKWAY

PARKING AREA
CONSTRUCTION PLANS

NATIONAL SCENIC TRAIL (BEECH SPRINGS PARKING) MP 265-
STA. 52+50+/- LT. SCHEDULE D

8/27/2007 3:35:59 PM M:\Projects\natr\3d30el2\proj_dev\CADD\F-natr3d30el2_ pp.dgn

NPS NO.	REG	STATE	PROJECT	SHEET NO.
604 / 42,994	SE	MS	PRA-NATR 3D30,E12	F-13

NOTES:

1. Replace all striping in existing locations, as approved by the CO.

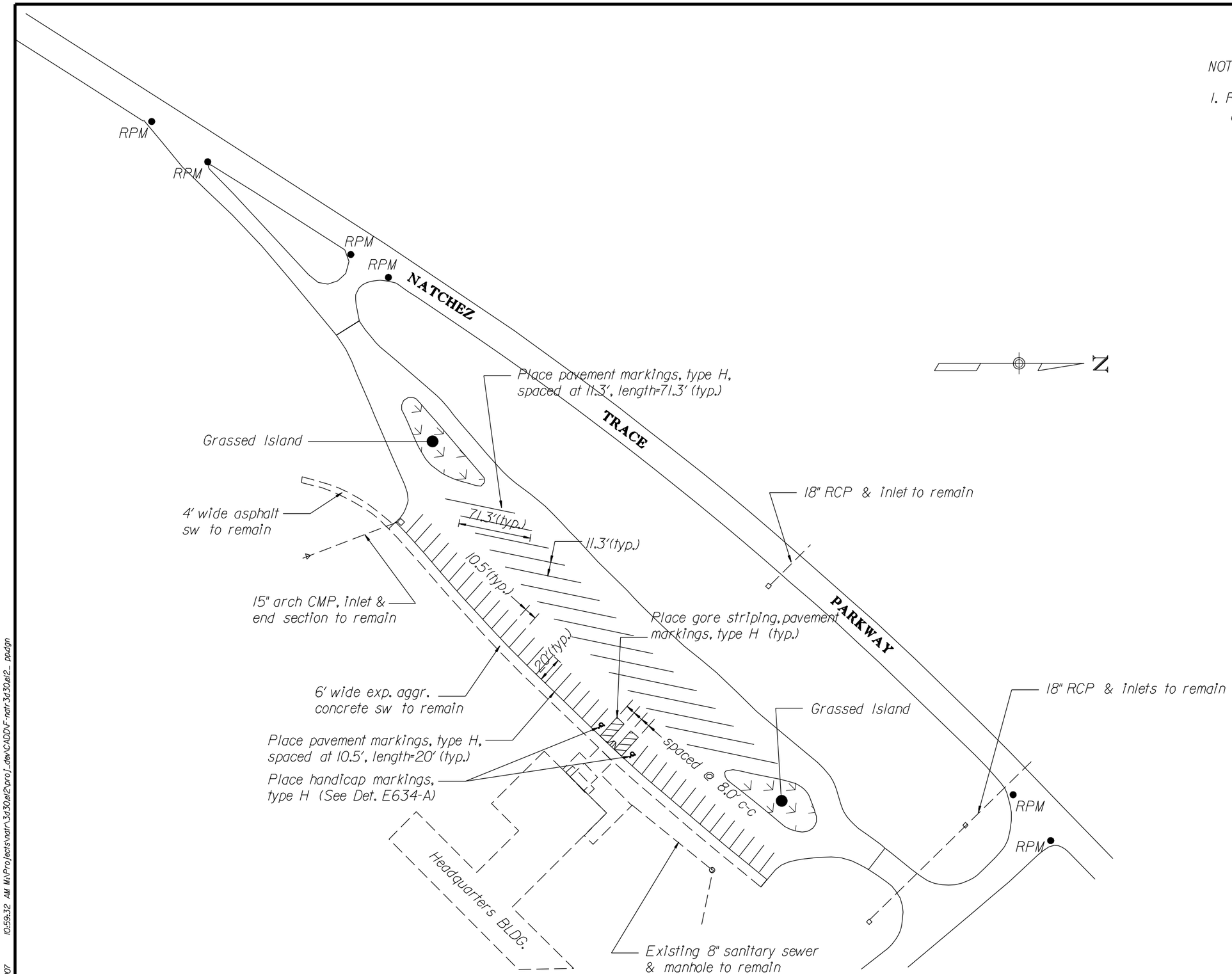

U.S. DEPARTMENT OF TRANSPORTATION
FEDERAL HIGHWAY ADMINISTRATION
EASTERN FEDERAL LANDS HIGHWAY DIVISION
STERLING, VIRGINIA

NATCHEZ TRACE PARKWAY

PARKING AREA CONSTRUCTION PLANS

TUPELO HEADQUARTERS VISITOR CENTER
MP 266

0 40 80
SCALE IN FEET

8/30/2007 10:59:32 AM M:\Projects\natr\3d30el2\proj_dev\CADD\F-natr3d30el2_ ppdgn

NPS NO.	REG	STATE	PROJECT	SHEET NO.
604 42,994	SE	MS	PRA-NATR 3D30, E12	G-1

Horizontal and vetical project datums are assumed.

Point	Northing	Easting	Elevation	Type
4001	50000.000	70000.000	500.000	TBAR
4002	50337.671	70202.892	499.926	TBAR

TBAR 4002

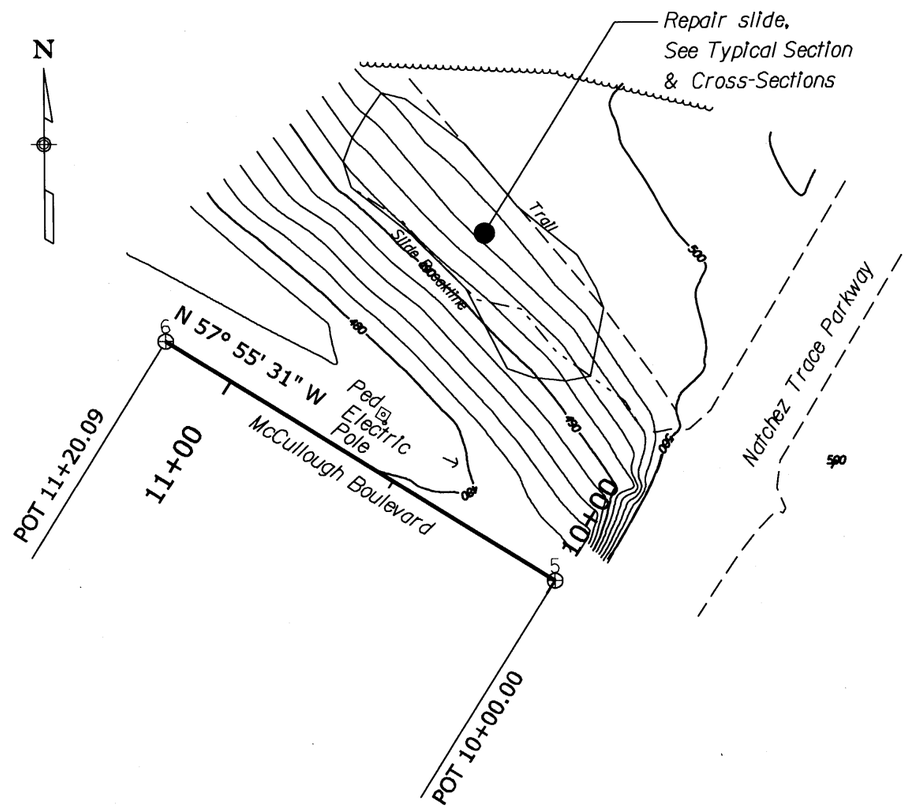

TBAR 4001

NOTES:

1. Remove the failed soil from the face of the slope and replace with suitable fill material. Remove material for the full height of the failed slope section, & laterally to a maximum 5 ft beyond the limits of the slide.

2. Bench the back of the excavation in accordance with Subsection 204.09 of the FP-03 & STD. E204-2.

3. Place a type III-B geotextile over the exposed subgrade & along the backslope of the excavation prior to placing backfill material.

4. Reconstruct the slope by placing compacted embankment material (unclassified borrow) in accordance with Section 204 & Subsection 704.06 of the FP.

5. Place topsoil, depth=4", type 5 erosion control mat and seed over the impacted slide area.

6. The baseline for the slide repair was not staked. The coordinates at Sta. 10+00 are N 50,125.714 E 70,073.010 and at Sta. 11+20.09 are N 50,189.482 E 69,971.255.

U.S. DEPARTMENT OF TRANSPORTATION
FEDERAL HIGHWAY ADMINISTRATION
EASTERN FEDERAL LANDS HIGHWAY DIVISION
STERLING, VIRGINIA

NATCHEZ TRACE PARKWAY

SLIDE AT MP 262
REPAIR PLAN

MCCULLOUGH BLVD.

0 20 40
SCALE IN FEET

8/22/2007 5:34:37 PM M:\Projects\natr\3d30el2\proj_dgn\CADD\SLIDEMC2622DV8.dgn

NPS NO.	REG	STATE	PROJECT	SHEET NO.
604 / 42,994	SE	MS	PRA-NATR 3D30,E12	N-1

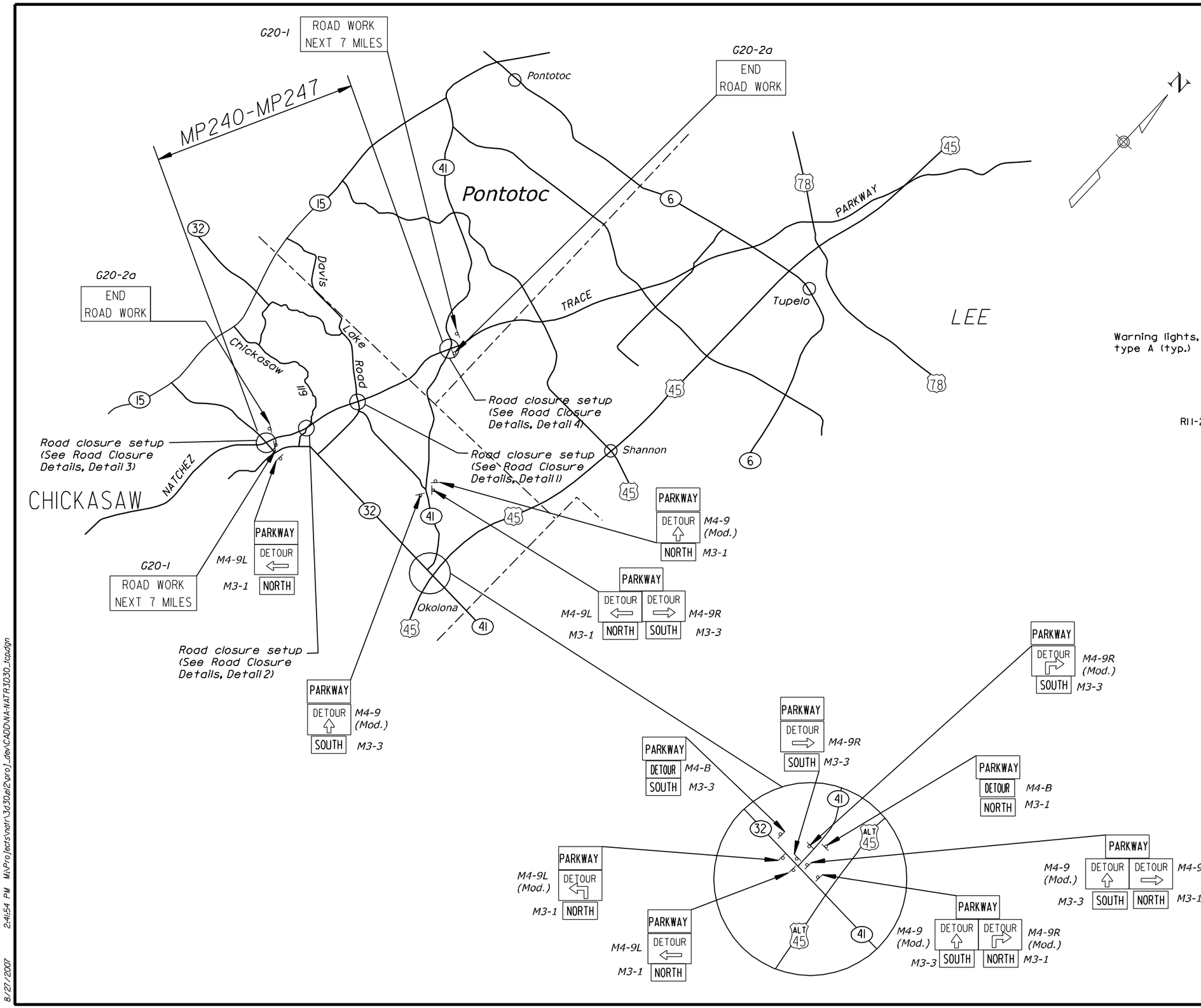

Notes:

1. Space signs at 500 ft. Location of signs may be adjusted by the CO.
2. Install signs in accordance with the latest edition of Manual of Uniform Traffic Control Devices (MUTCD).
3. When not applicable, cover all signs with plywood in a manner satisfactory to the CO.
4. See Sheet 2 of 2 and other traffic control details for additional information
5. Place additional End Road Work (G20-2a) signs at intersecting roads as directed by the CO.

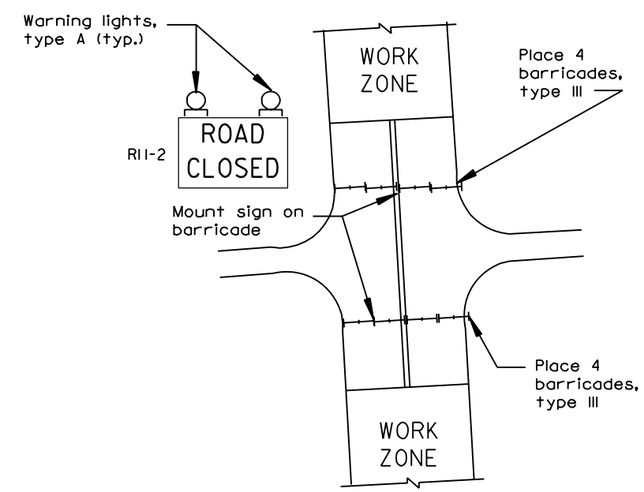

ROAD CLOSURE DETAIL 2
CHICKASAW COUNTY ROAD 119

U.S. DEPARTMENT OF TRANSPORTATION
FEDERAL HIGHWAY ADMINISTRATION
EASTERN FEDERAL LANDS HIGHWAY DIVISION
STERLING, VIRGINIA

NATCHEZ TRACE PARKWAY

TRAFFIC CONTROL DETOUR

FOR WORK AT MP240-MP247
(FROM MS RTE. 32 TO MS RTE. 41)

0 10,000 20,000
SCALE IN FEET

SHEET 1 OF 2

8/27/2007 2:41:54 PM W:\Projects\natr\3d30ae12\proj_dev\CADD\NA-NATR3D30_topdgn

NPS NO.	REG	STATE	PROJECT	SHEET NO.
604 / 42,994	SE	MS	PRA-NATR 3D30,E12	N-2

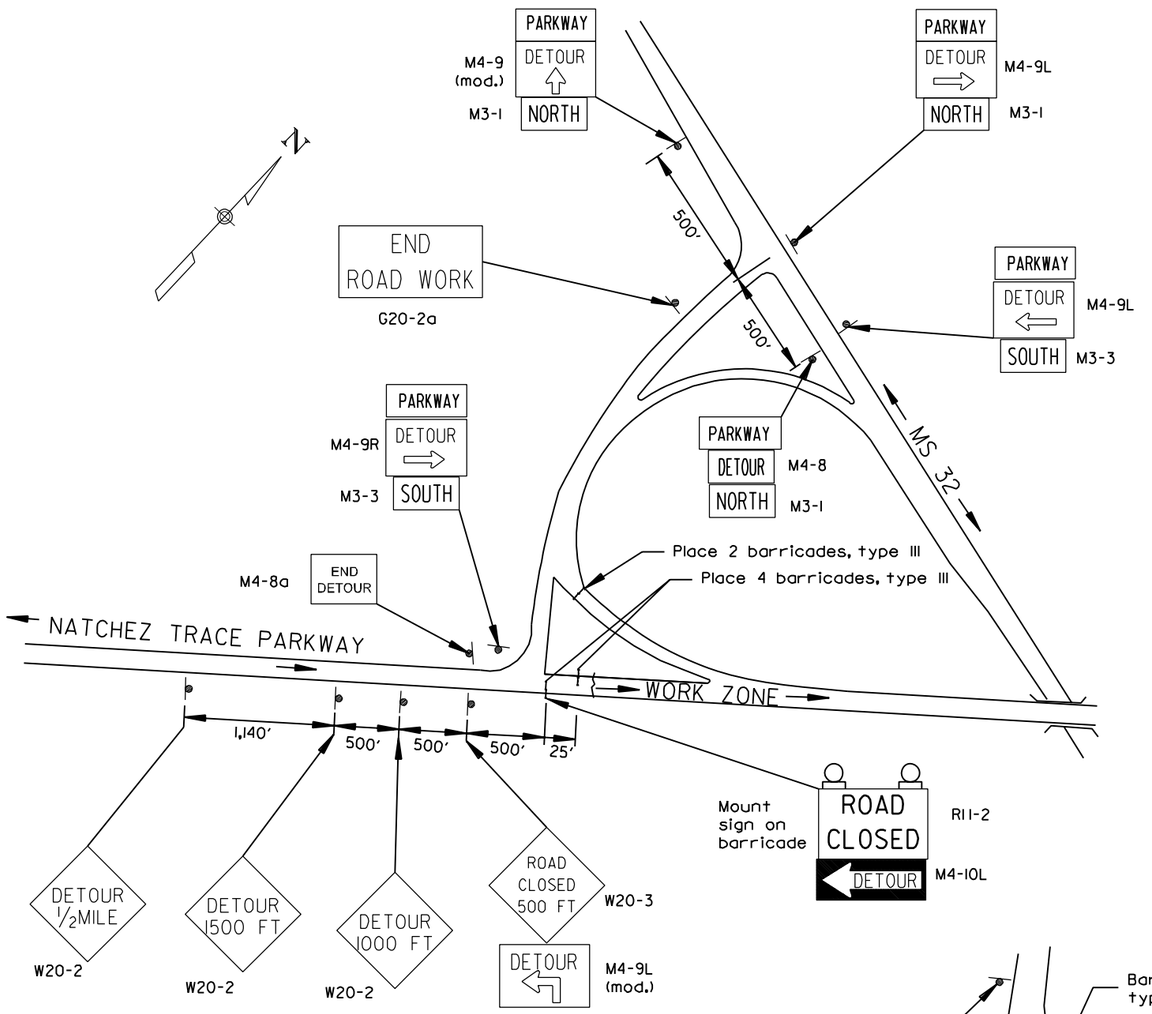

ROAD CLOSURE DETAIL 3
MS ROUTE 32

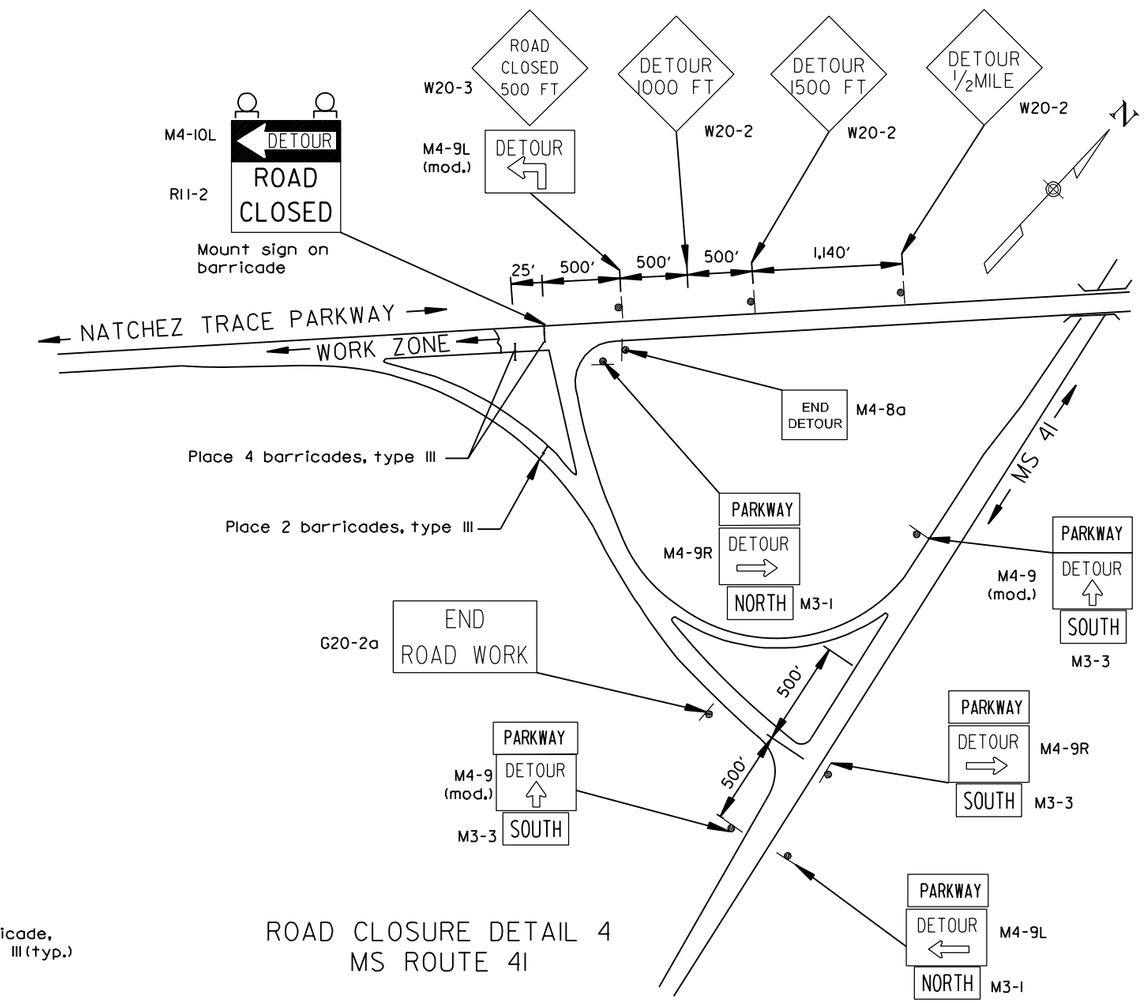

ROAD CLOSURE DETAIL 4
MS ROUTE 41

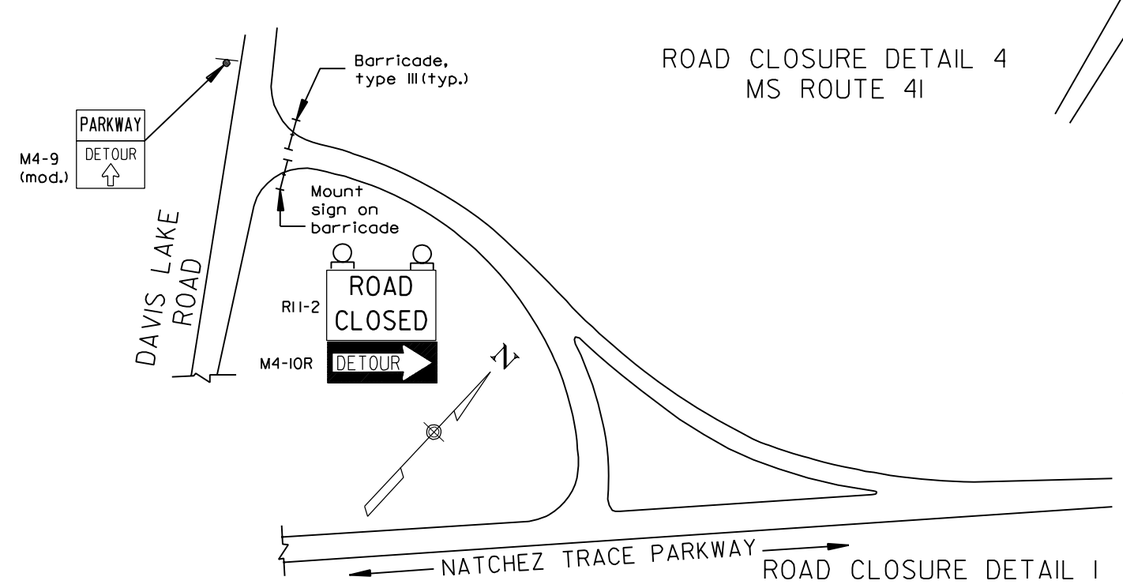

ROAD CLOSURE DETAIL 1
DAVIS LAKE ROAD

NOT TO SCALE

U.S. DEPARTMENT OF TRANSPORTATION
FEDERAL HIGHWAY ADMINISTRATION
EASTERN FEDERAL LANDS HIGHWAY DIVISION
STERLING, VIRGINIA

NATCHEZ TRACE PARKWAY

TRAFFIC CONTROL DETOUR

FOR WORK AT MP240-MP247
(FROM MS RTE. 32 TO MS RTE. 41)

SHEET 2 OF 2

8/27/2007 2:42:13 PM M:\Projects\natr\3d30e12\proj_dev\CADD\WA-NATR3D30_tcp.dgn

NPS NO.	REG	STATE	PROJECT	SHEET NO.
604 42,994	SE	MS	PRA-NATR 3D30, E12	P-1

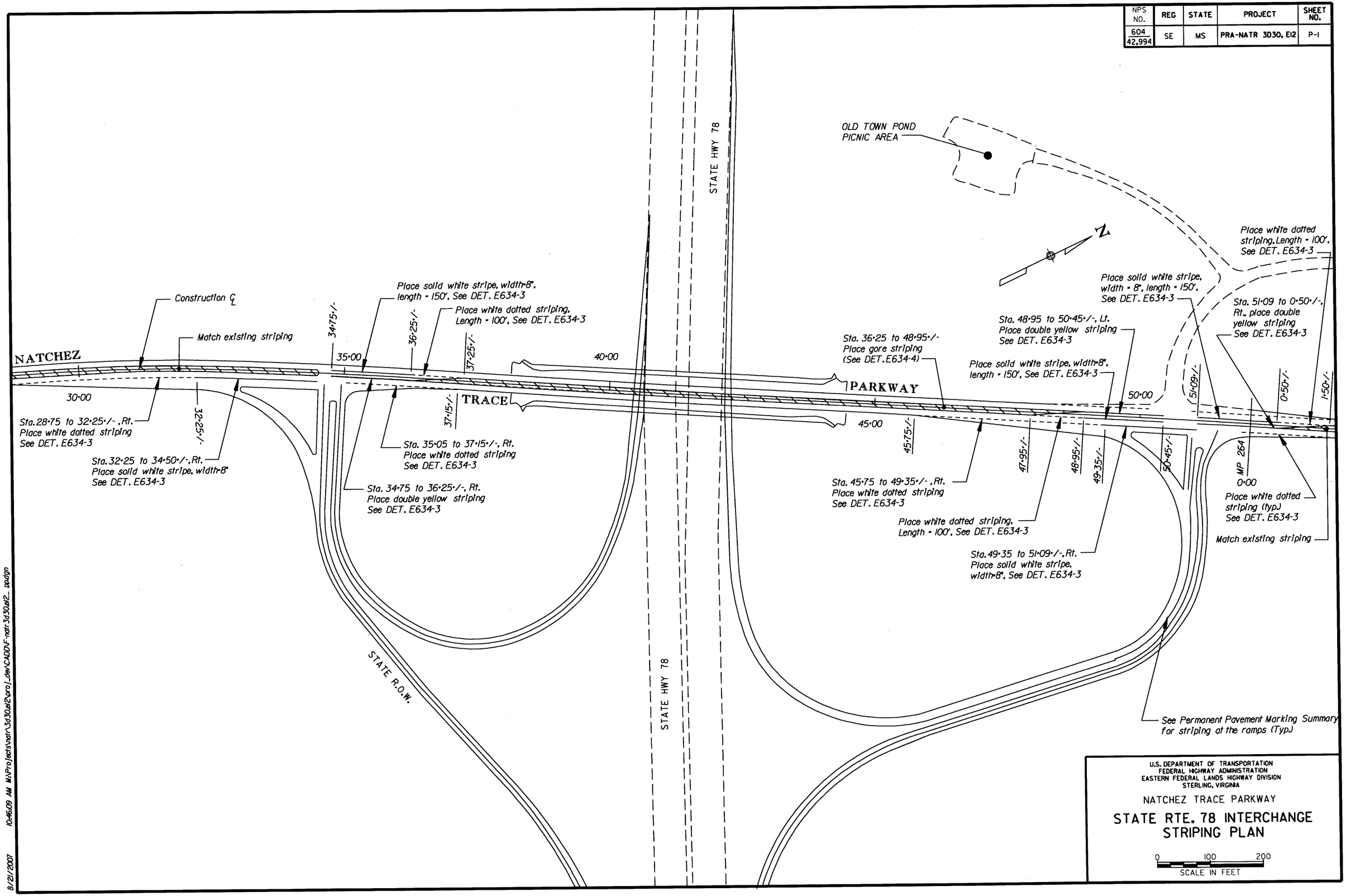

U.S. DEPARTMENT OF TRANSPORTATION
FEDERAL HIGHWAY ADMINISTRATION
EASTERN FEDERAL LANDS HIGHWAY DIVISION
STERLING, VIRGINIA

NATCHEZ TRACE PARKWAY

STATE RTE. 78 INTERCHANGE STRIPING PLAN

0 100 200
SCALE IN FEET

8/21/2007 10:46:09 AM M:\Projects\natr\3d30\el2\proj_dev\CADD\F-natr3d30el2_ppdgn

NPS NO.	REG	STATE	PROJECT	SHEET NO.
604 / 42,994	SE	MS	PRA-NATR 3D30, E12	S-1

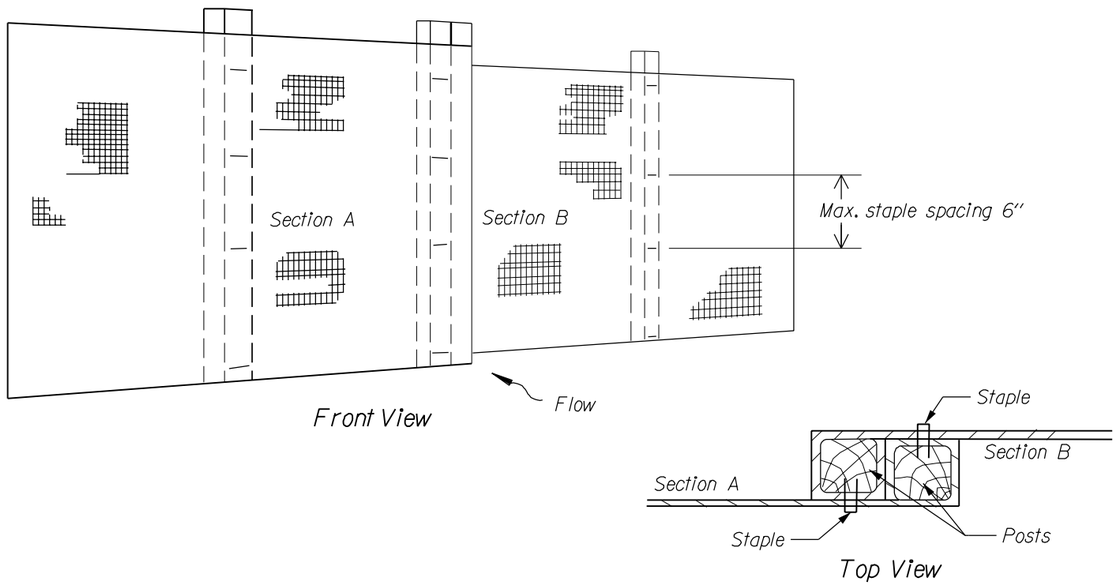

JOINING TWO ADJACENT SILT FENCE SECTIONS

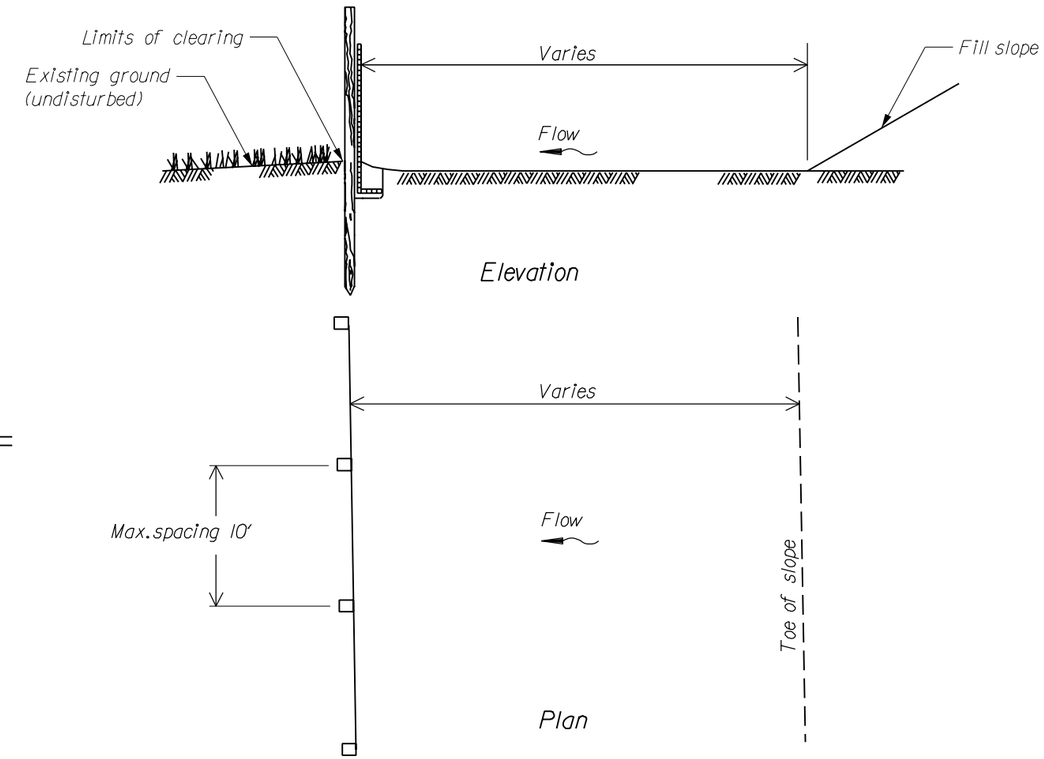

SILT FENCE INSTALLATION AT TOE OF FILL

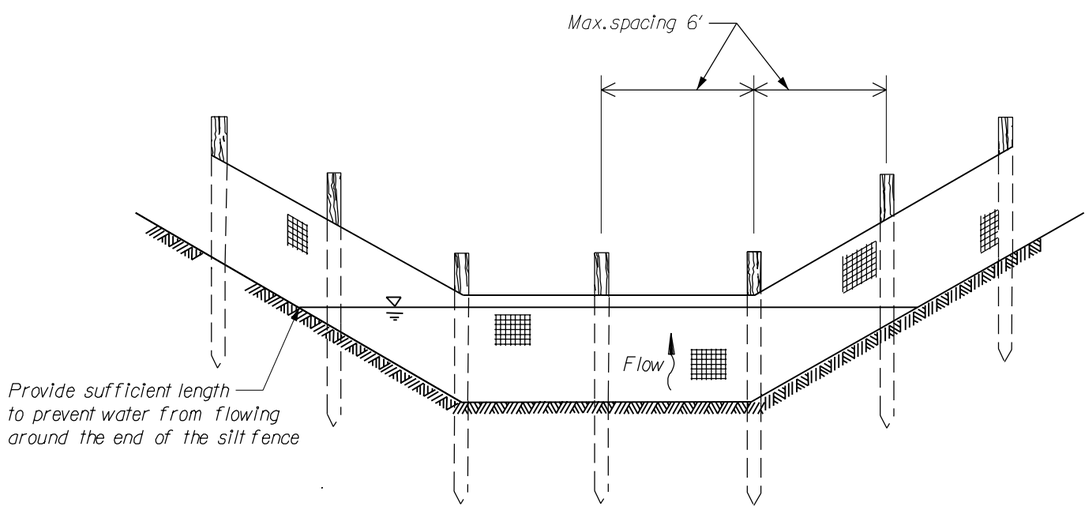

SILT FENCE INSTALLATION IN A DRAINAGE DITCH

Note: Use drainage ditch installation for low flow conditions only when specified on Erosion Control Plan.

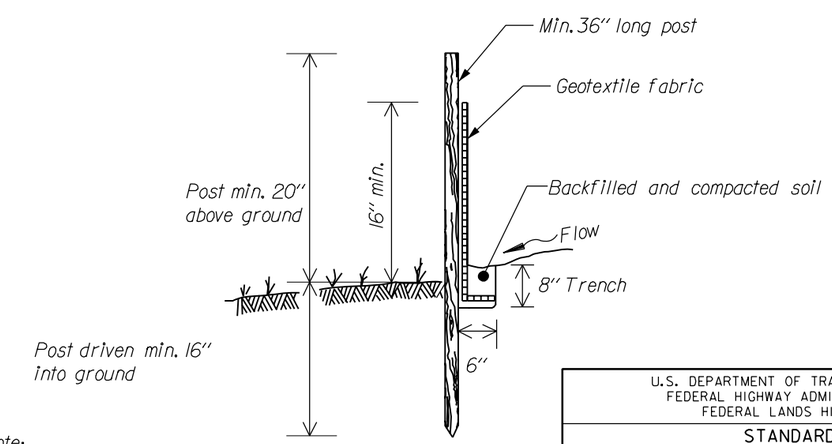

(not to scale)

Note:
Alternate pre-assembled silt fence options will be allowed as long as specified minimums are satisfied. Follow manufacturer's information for installation procedures.

U.S. DEPARTMENT OF TRANSPORTATION
FEDERAL HIGHWAY ADMINISTRATION
FEDERAL LANDS HIGHWAY

STANDARD

SILT FENCE

STANDARD APPROVED FOR USE --/----
REVISED:

STANDARD 157-1

8/27/2007 2:35:52 PM M:\Projects\natr\3d30\el2\proj_dev\CADD\Std-Def\std157x01.dgn

NPS NO.	REG	STATE	PROJECT	SHEET NO.
604 42,994	SE	MS	PRA-NATR 3D30,E12	S-2

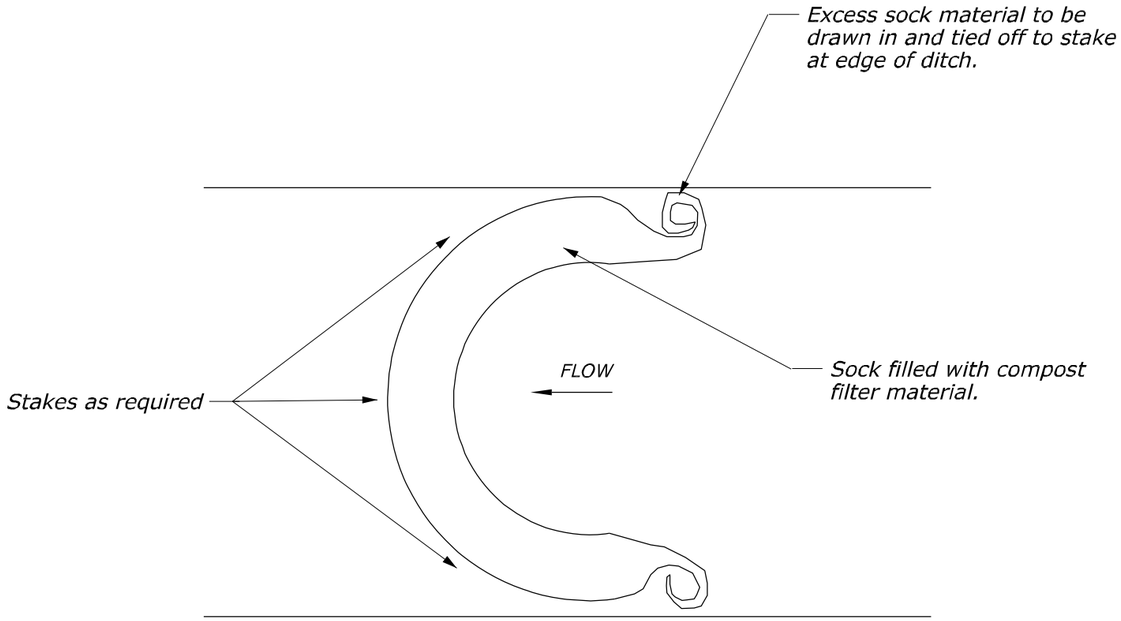

USED AS A CHECK DAM

DITCH GRADE (G) *	CHECK DAM SPACING(S)	
	12" HIGH	18" HIGH
2%	50 ft	75 ft
3%	33 ft	50 ft
4%	25 ft	40 ft
5%	20 ft	30 ft
6%	16 ft	25 ft

* do not use Check Dams below 2% or above 6% ditch grades

Notes:

1. Provide sock and compost materials in accordance with Section 157.
2. Maintain compost filter berm in a functional condition at all times, as directed by the CO.
3. Remove sediment at the base of the berm when it has reached 1/3 of the exposed height of the berm, or as directed by the CO.
4. Disperse the compost filter berm on site when no longer required, as directed by the CO.

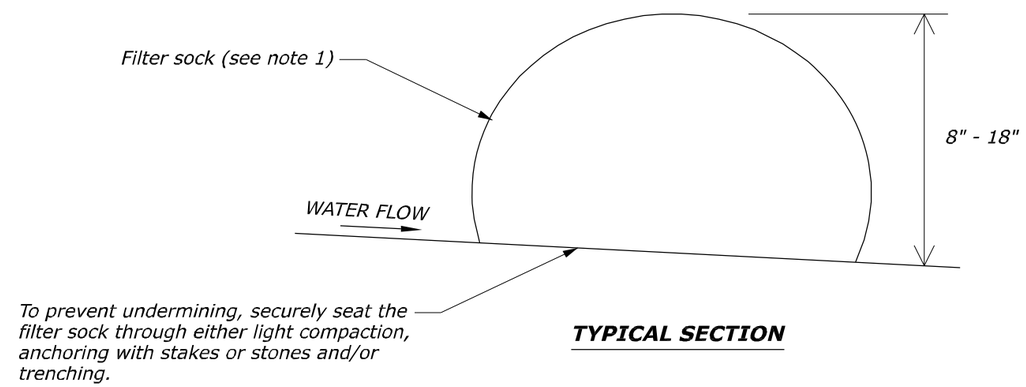

TYPICAL SECTION

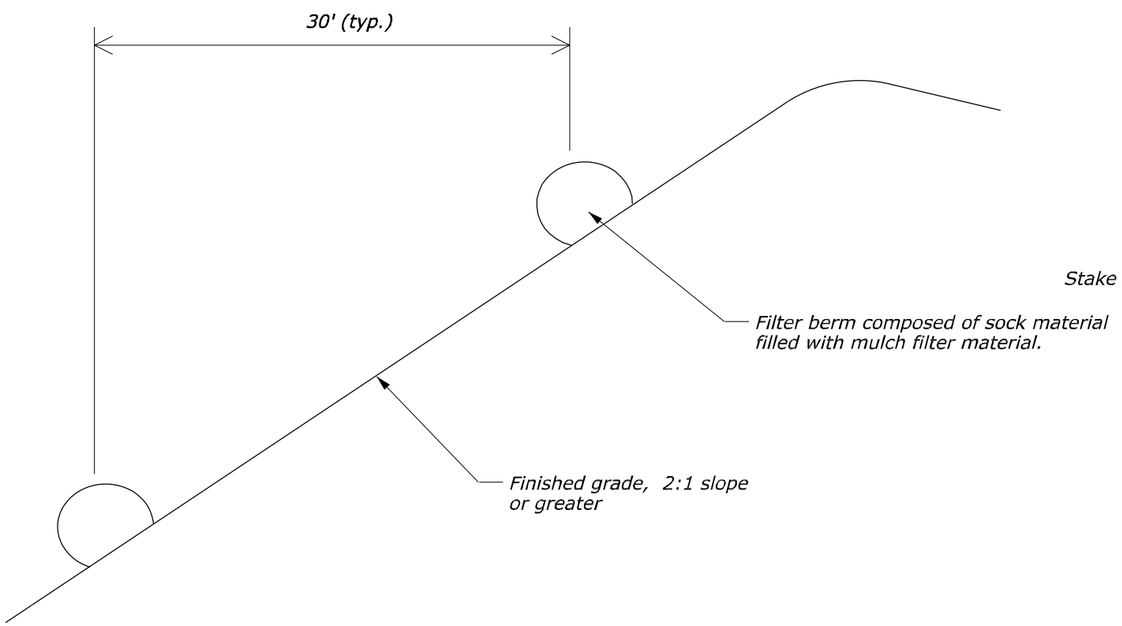

USED FOR SLOPE PROTECTION

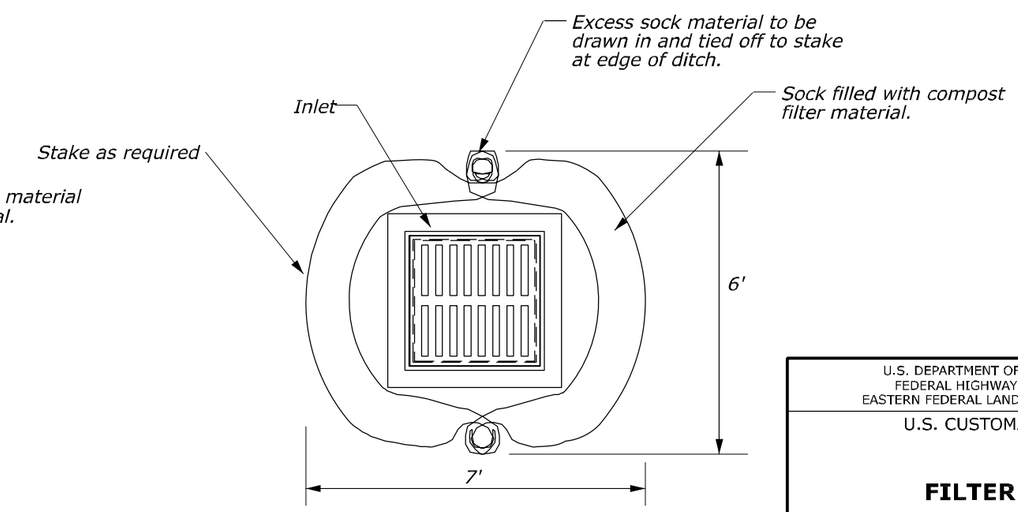

USED AS INLET PROTECTION

U.S. DEPARTMENT OF TRANSPORTATION
FEDERAL HIGHWAY ADMINISTRATION
EASTERN FEDERAL LANDS HIGHWAY DIVISION

U.S. CUSTOMARY DETAIL

FILTER BERM

DETAIL APPROVED FOR USE

REVISED:

DETAIL E157-A

8/27/2007 2:37:07 PM M:\Projects\natr\3d30al2\proj_dev\CADD\Std-Det\sf15704_detail.dgn

NPS NO.	REG	STATE	PROJECT	SHEET NO.
604 / 42,994	SE	MS	PRA-NATR 3D30,E12	S-3

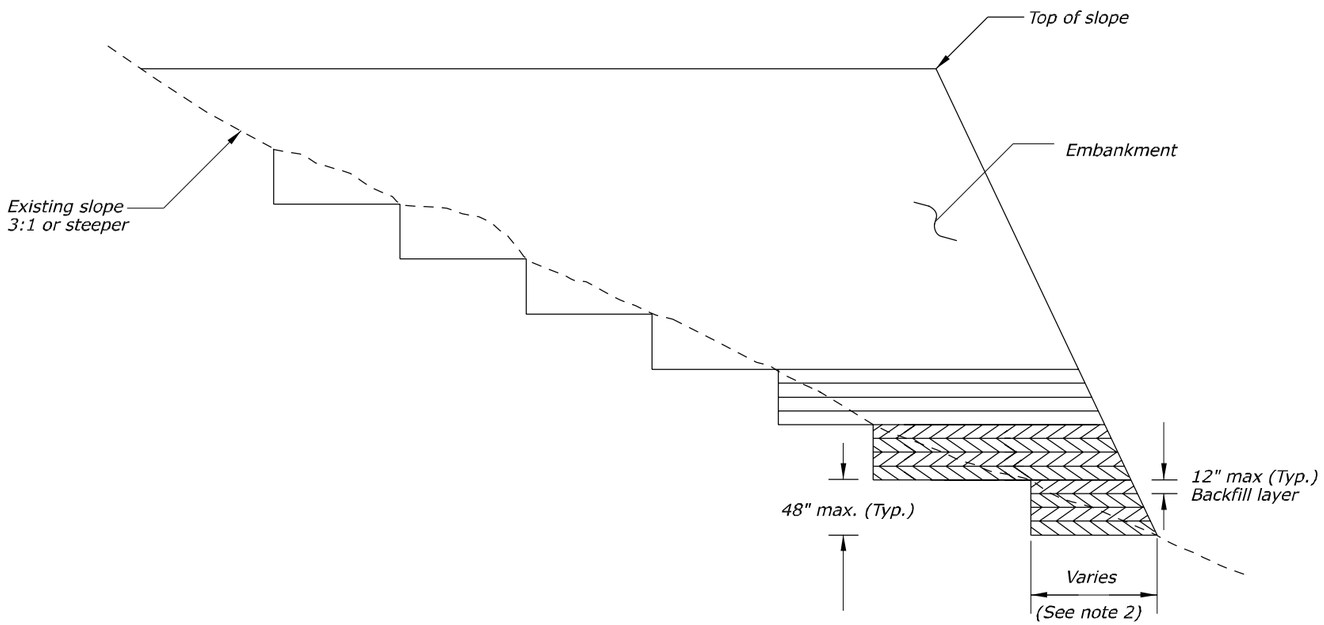

BENCHING DETAIL A

SLOPES STEEPER THAN 3:1

NOTES:

1. Where the embankment foundation is a hillside or another existing embankment, the foundation must be benched while the embankment is being constructed.
2. For slopes 3:1 or steeper, refer to Benching Detail A. Cut 8 ft wide horizontal benches in the existing slope. Bench the slope as the embankment is placed and compacted in 1 ft thick layers until a backfill height of 4 ft is reached. Excavate and backfill in a similar manner until the top of slope is reached.
3. For slopes flatter than 3:1, refer to Benching Detail B. Cut into the existing slope until a maximum heigth of 1 ft is reached, allowing the horizontal distance to vary. Place embankment material. Excavate and backfill in a similar manner until the top of slope is reached.
4. Benching is considered incidental to the item of roadway excavation and no additional measurement of quantity or payment will be made for benching.
5. Refer to Section 204 for benching specifications.

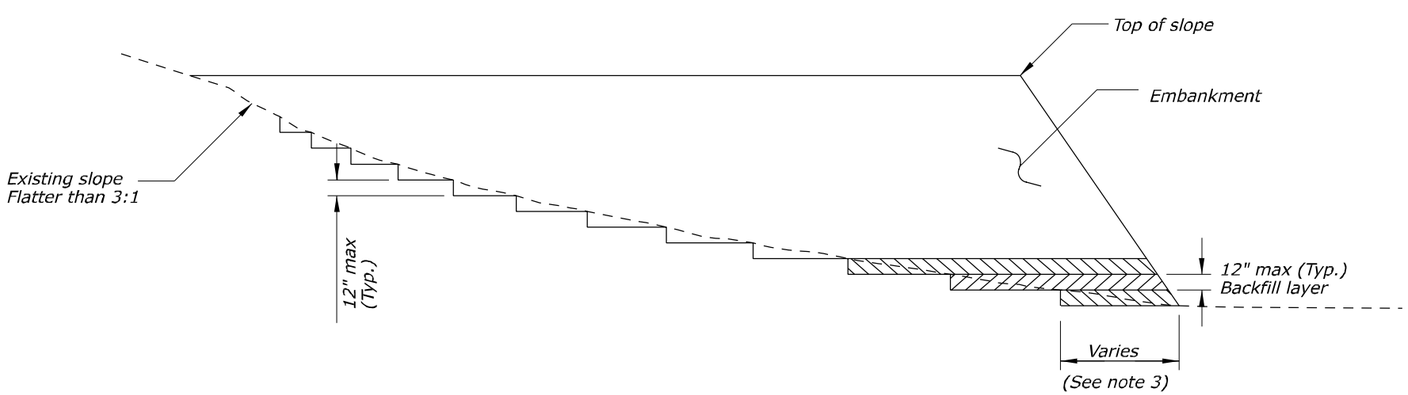

BENCHING DETAIL B

SLOPES FLATTER THAN 3:1

NO SCALE

U.S. DEPARTMENT OF TRANSPORTATION
FEDERAL HIGHWAY ADMINISTRATION
EASTERN FEDERAL LANDS HIGHWAY DIVISION

BENCHING DETAIL

DETAIL APPROVED FOR USE

REVISED: 06/07

DETAIL
E204-02

9/5/2007 3:16:45 PM M:\Projects\natr\3d30,e12\proj_dev\CADD\Std-Det\st20402_detail.dgn

NPS NO.	REG	STATE	PROJECT	SHEET NO.
604 / 42,994	SE	MS	PRA-NATR 3D30,E12	S-4

DEPTH (d)	
Riprap Class	Depth (d)-(in)
1	12
2	18
3	24
4	30
5	42
6	48

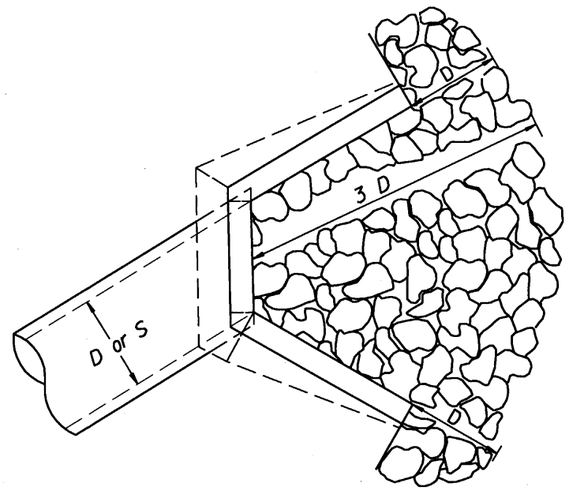

PLAN

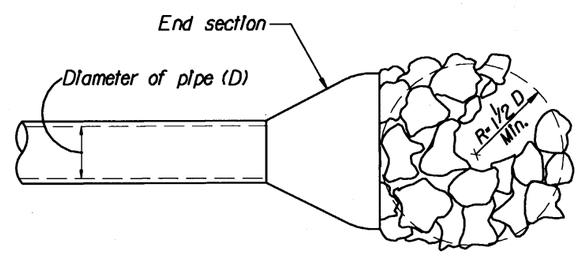

PLAN

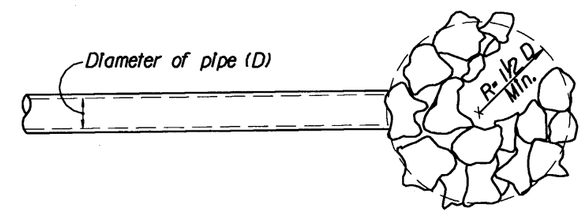

PLAN

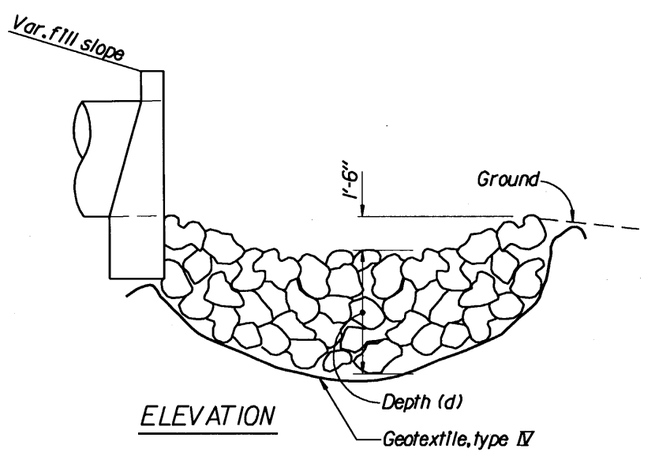

ELEVATION

CULVERT WITH HEADWALL

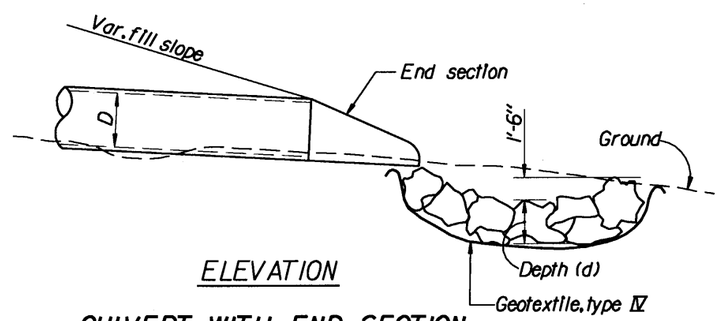

ELEVATION

CULVERT WITH END SECTION

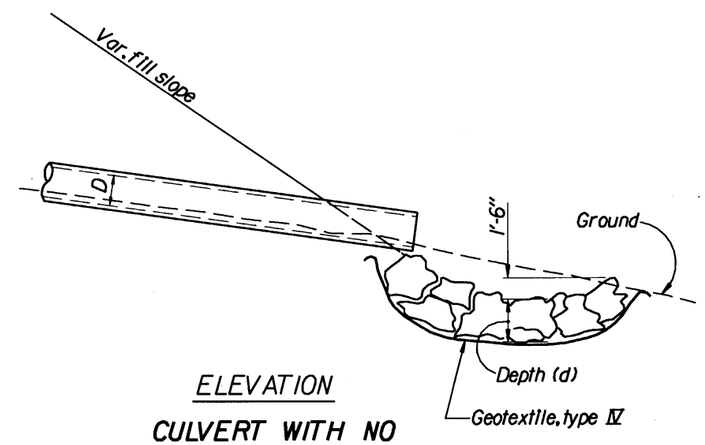

ELEVATION

CULVERT WITH NO END TREATMENT

NOT TO SCALE

NOTE:

For arch or elliptical pipes, use equivalent diameter for (D) dimension

U.S. DEPARTMENT OF TRANSPORTATION
FEDERAL HIGHWAY ADMINISTRATION
EASTERN FEDERAL LANDS HIGHWAY DIVISION

DETAIL

LOOSE RIPRAP AT CULVERT

DETAIL APPROVED FOR USE --/----

REVISED:

DETAIL E251-1

8/22/2007 11:30:12 AM M:\Projects\natr\3d30,e12\proj_dev\CADD\Std-Det\dt251x01.dgn

NPS NO.	REG	STATE	PROJECT	SHEET NO.
604 42,994	SE	MS	PRA-NATR 3D30, E12	S-5

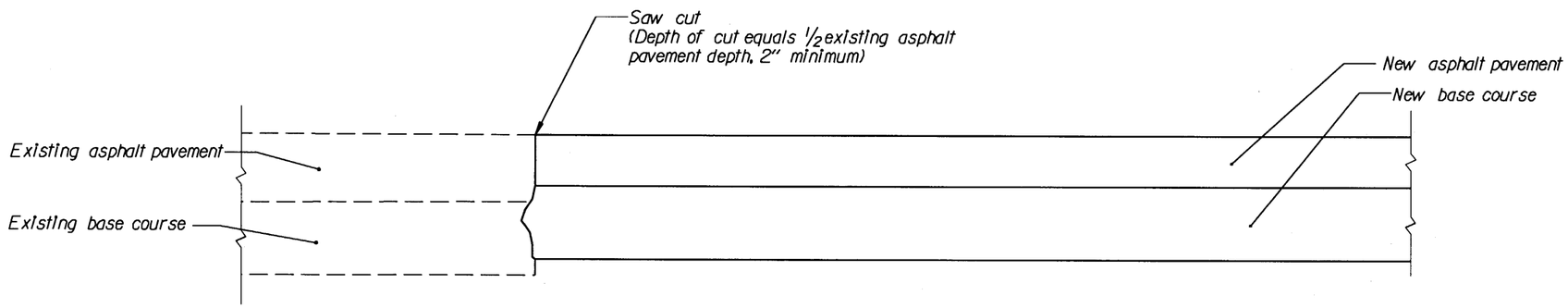

NEW PAVEMENT

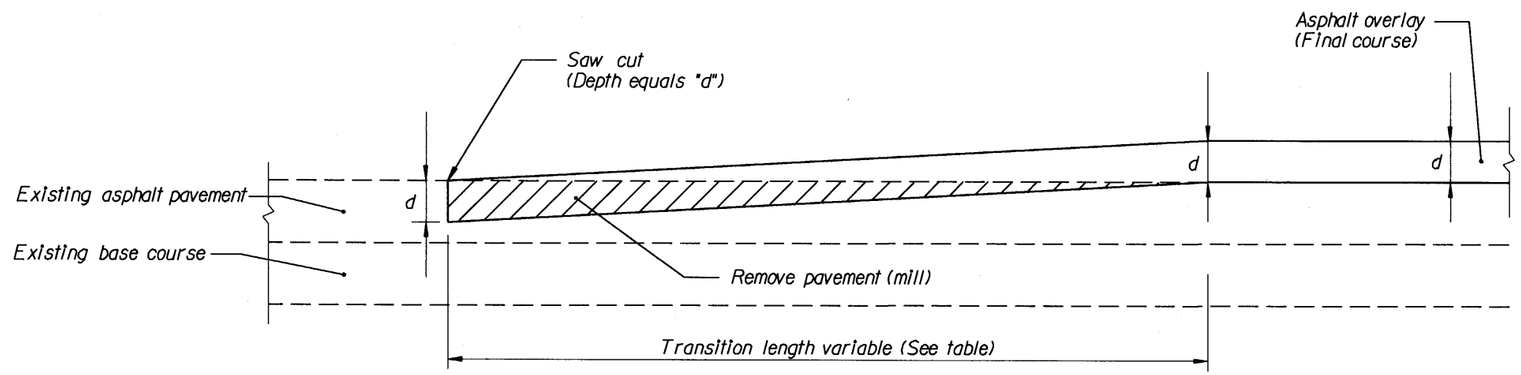

MILL AND OVERLAY

d - Inches	Transition Length - Feet (Use on Parkway)	Transition Length - Feet (Use on Ramps and Parking Lots)
1	50	20
1.5	75	30
2	100	40
2.5	125	50
3	150	60

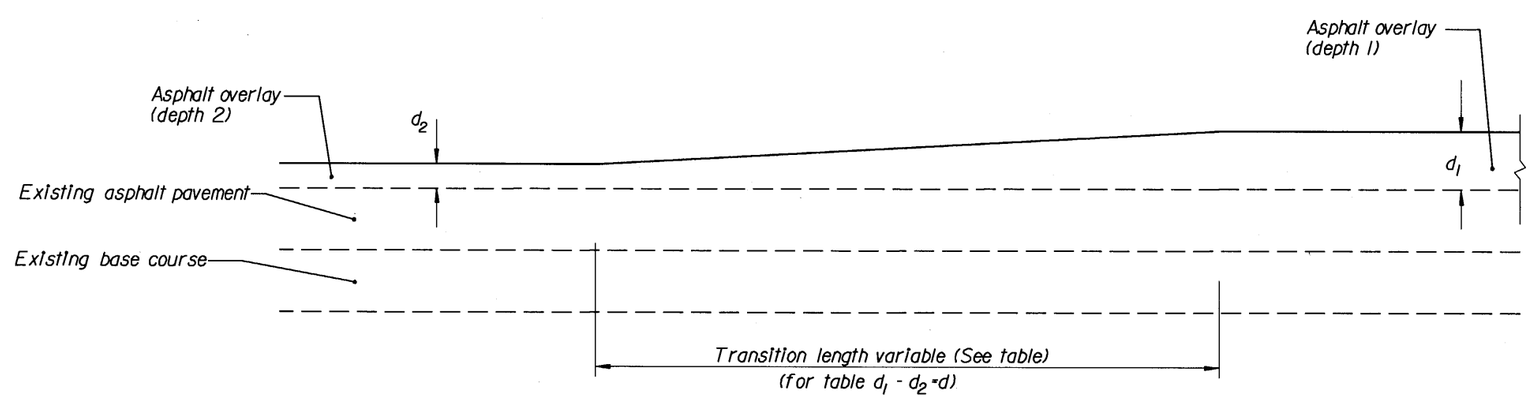

MILL AND OVERLAY - DEPTH TRANSITIONS

NOT TO SCALE

U.S. DEPARTMENT OF TRANSPORTATION
FEDERAL HIGHWAY ADMINISTRATION
EASTERN FEDERAL LANDS HIGHWAY DIVISION

DETAIL

PAVEMENT TRANSITIONS

DETAIL APPROVED FOR USE --/----

REVISED:

DETAIL
E401-A

8/23/2007 11:08:15 AM W:\Projects\natr\3d30\e12\proj_dev\CADD\Std-Det\d1401x01.dgn

NPS NO.	REG	STATE	PROJECT	SHEET NO.
604 / 42,994	SE	MS	PRA-NATR 3D30, E12	S-6

NOTES:

1. Install joint sealer & compatible backer road in accordance with manufacturer's instructions & recommendations.

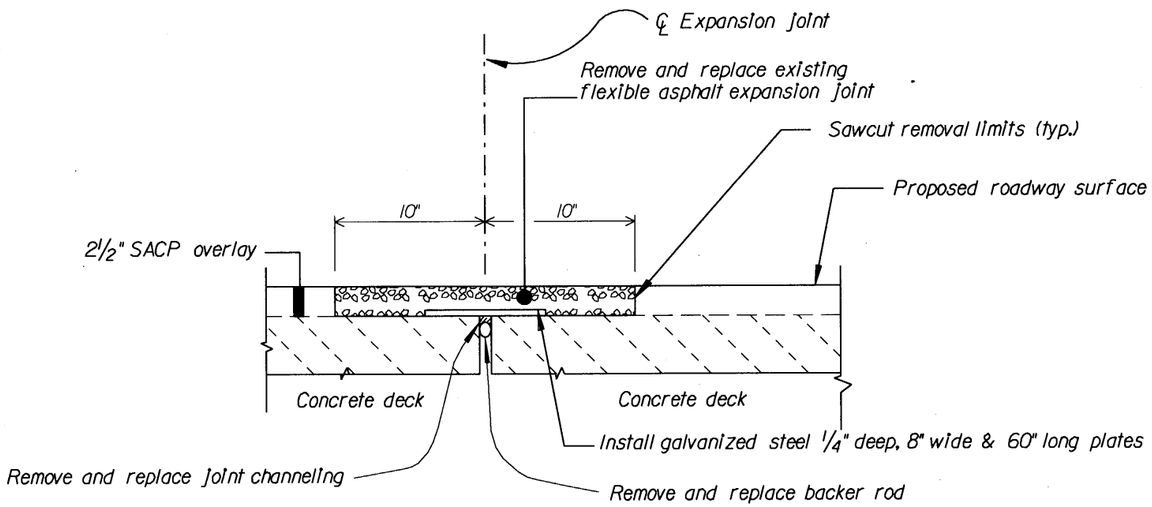

Repair Procedures:

1. Sawcut existing asphalt expansion joint 1½" deep along the limits of removal.
2. Remove existing joint materials to the existing concrete deck surface. Make sure the exposed surface is dry. Abrasive blast the removal area to remove all latencies and contaminates which may cause bonding problems. Clean the removal area of dust and debris with hot air lance.
3. Construct asphaltic plug expansion joint using one of the following:
   (a) WABO Expandex Asphaltic Plug Joint Watson Bowman Acme Corporation
   (b) Matrix 502 Asphaltic Plug Bridge Joint System D.S.Brown Company
   (c) Approved equivalent from another manufacturer.
4. Construct expansion joint system in accordance with the manufacturer's recommendations.

WIDE JOINT (UP TO 3" WIDE) SAWCUTTING AND JOINT SEALING AT BRIDGE EXPANSION JOINTS (USE AT HWY 78 BRIDGE AND WHERE DIRECTED BY THE CO)

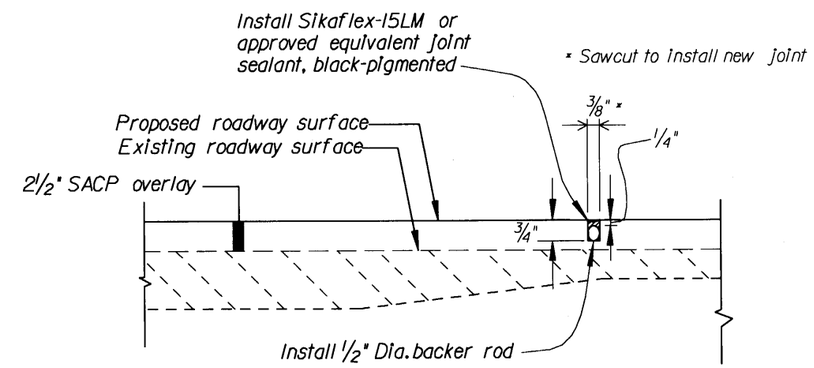

SAWCUTTING AND JOINT SEALING AT BRIDGE ENDS, BRIDGE APPROACH SLABS AND BRIDGE EXPANSION JOINTS

U.S. DEPARTMENT OF TRANSPORTATION
FEDERAL HIGHWAY ADMINISTRATION
EASTERN FEDERAL LANDS HIGHWAY DIVISION

DETAIL
SAWCUTTING AND JOINT SEALING AT BRIDGE APPROACH SLABS, BRIDGE ENDS AND BRIDGE EXPANSION JOINTS

DETAIL APPROVED FOR USE:
REVISED:

DETAIL E414-A

8/22/2007 9:19:37 AM M:\Projects\natr\3d30pl2\proj_dev\CADD\Std-Det\det204a.dgn

NPS NO.	REG	STATE	PROJECT	SHEET NO.
604 42,994	SE	MS	PRA-NATR 3D30,E12	S-7

CONCRETE ROUND PIPE CULVERT

FILL HEIGHT AND PIPE CLASS TABLE

PIPE SIZE DIAMETER INCHES	MINIMUM COVER INCHES	EMBANKMENT CLASS II	EMBANKMENT CLASS III	EMBANKMENT CLASS IV	EMBANKMENT CLASS V	TRENCH CLASS II	TRENCH CLASS III	TRENCH CLASS IV	TRENCH CLASS V
		MAXIMUM FILL HEIGHT ABOVE TOP OF PIPE IN FEET							
12	12	11	11	16	23	18	18	26	37
18	12	10	10	25	39	14	14	31	45
24	12	11	11	15	31	15	15	22	40
30	12	9	13	16	35	13	17	20	46
36	12	9	9	20	41	11	14	26	56
48	12	12	14	26	44	16	17	31	50
60	12	15	17	28	44	15	20	32	50
72	12	13	17	31	41	16	20	35	49
84	12	13	19	31		15	23	37	
96	12	13	20			16	24		
108	12	16	20			19	26		

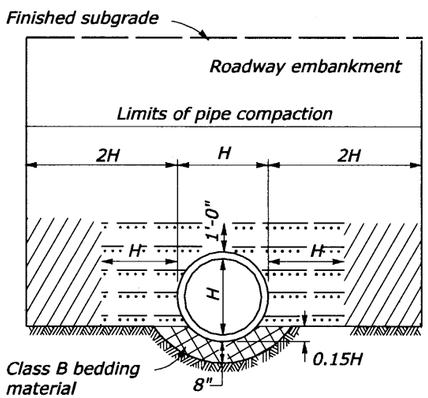

EMBANKMENT INSTALLATION

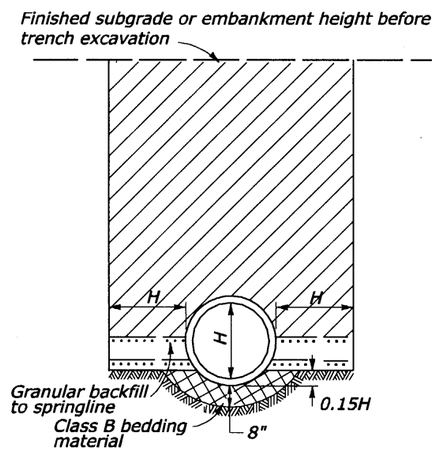

TRENCH INSTALLATION

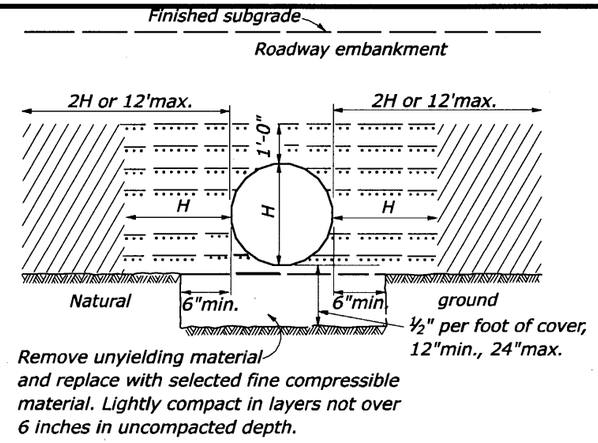

ON UNYIELDING MATERIAL

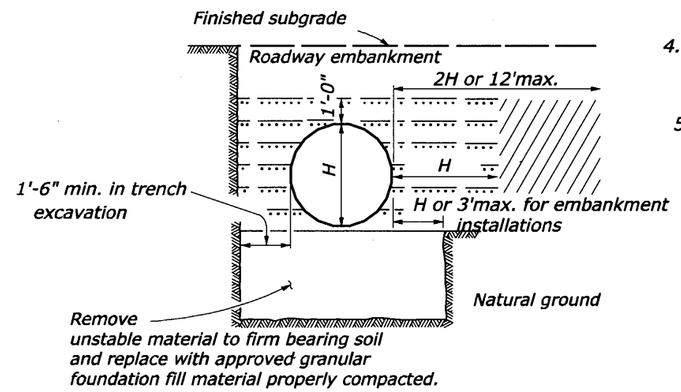

ON UNSTABLE MATERIAL

NOTE:

1. When directed, camber pipe culverts upward from a chord through the inlet and outlet inverts an ordinate amount equal to 1% of the pipe length. Develop camber on a parabolic curve. If the midpoint elevation on the parabolic curve as designed exceeds the elevation of the inlet invert, reduce the amount of camber or increase the pipe culvert gradient.
2. Measure minimum cover from the top of the pipe culvert to the subgrade for flexible pavements, and to the top of the pavement for rigid pavements. Measure maximum fill height from the top of the pipe to the top of the pavement for both flexible and rigid pavements.
3. Pipe compaction limits shown are for pipe installation in an embankment. For pipe installation in a trench, the compaction limits shall be the walls of the trench.
4. When grades exceed 10%, install supplemental concrete pipe ties on pipe culvert or install bell and spigot pipe.
5. Maximum fill heights for pipe culvert installations may be increased on approval of site-specific structural pipe designs meeting the criteria of AASHTO Standard Specifications for Highway Bridges.

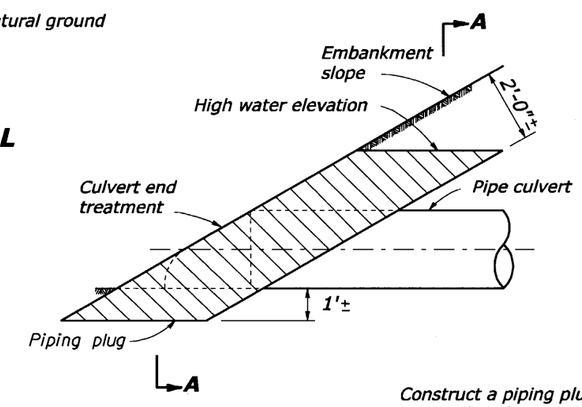

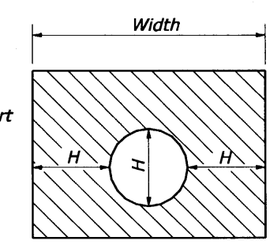

SECTION A-A

Construct a piping plug of impermeable backfill material at the pipe inlet where granular material is used for backfill. Width may be adjusted to tie into impervious material.

PIPING PLUG

LEGEND:

- Bedding material
- Embankment material placed in layers not exceeding 6" compacted depth.
- Approved granular material or fine compactable soil placed in layers not exceeding 6" compacted depth.

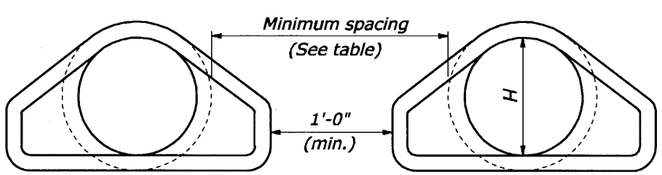

MINIMUM SPACING		
DIAMETER INCHES	EMBANKMENT	TRENCH
12-36	15"	2H
36-96	H/2	72"
OVER 96	48"	72"

MULTIPLE ROUND PIPE INSTALLATION

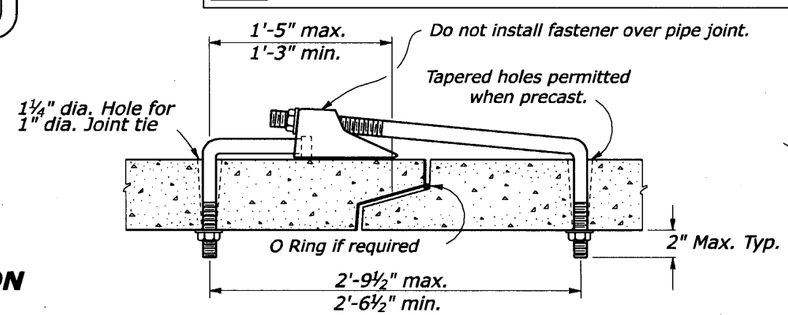

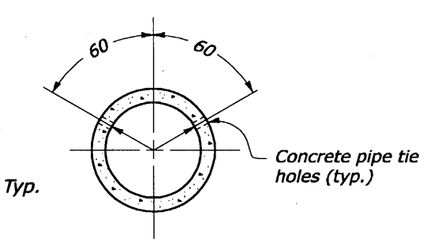

SUPPLEMENTAL CONCRETE PIPE TIE

NO SCALE

U.S. DEPARTMENT OF TRANSPORTATION
FEDERAL HIGHWAY ADMINISTRATION
EASTERN FEDERAL LANDS HIGHWAY DIVISION

U.S. CUSTOMARY DETAIL

CONCRETE PIPE CULVERT INSTALLATION

DETAIL APPROVED FOR USE 02/2007

REVISED: 04/02 904/07

DETAIL E602-07

8/20/2007 2/5/22 PW W:\Projects\eflh\3d30ai2\proj_dir\CADD\Std-Dets\60207_detail.dgn

NPS NO.	REG	STATE	PROJECT	SHEET NO.
604 42,994	SE	MS	PRA-NATR 3D30,E12	S-8

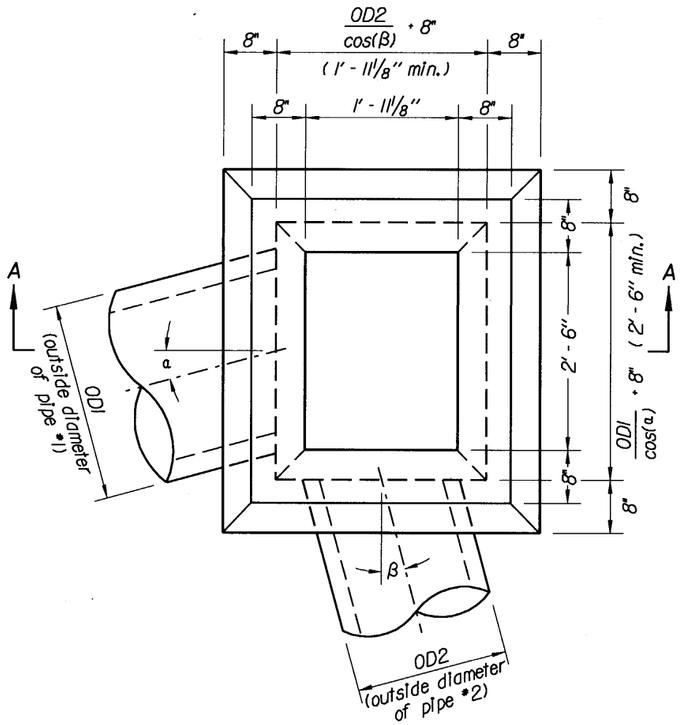

INLET, TYPE 6A

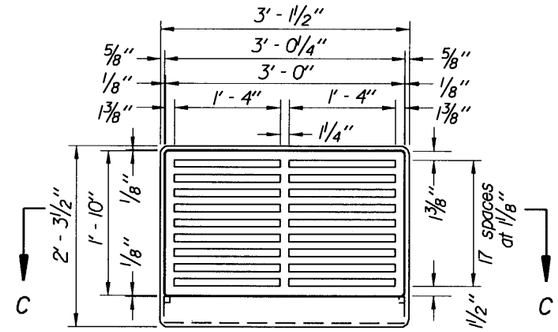

METAL FRAMES AND GRATINGS TYPE 6A

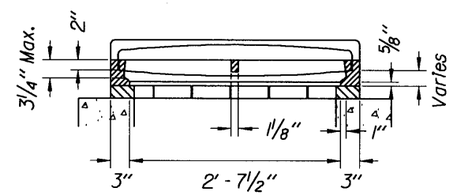

SECTION C-C

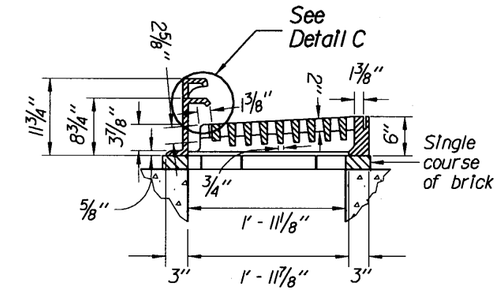

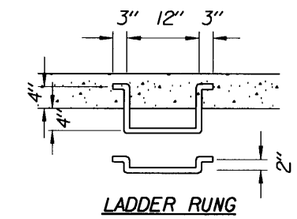

LADDER RUNG

3/4"ø or 3/4"□ Steel or Wrought Iron to be used where depth exceeds 4'-0"

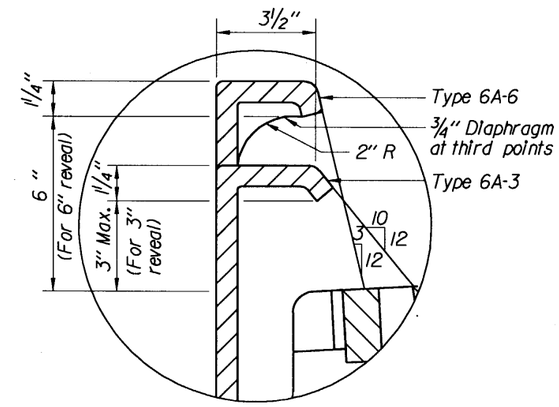

DETAIL C

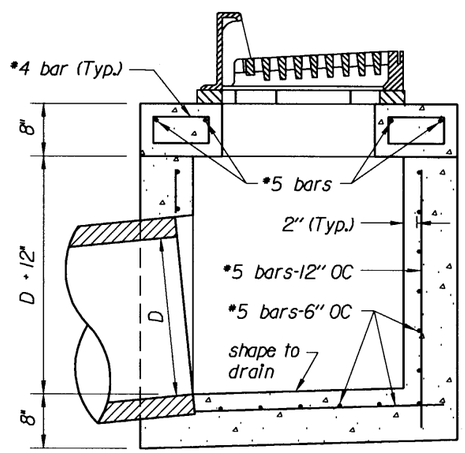

Limited Headroom
SECTION A-A

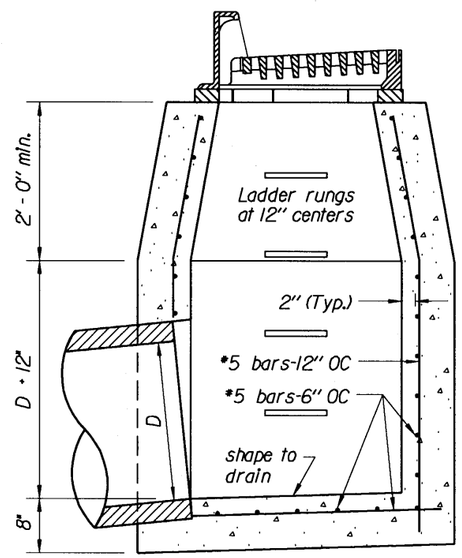

Ample Headroom
SECTION A-A

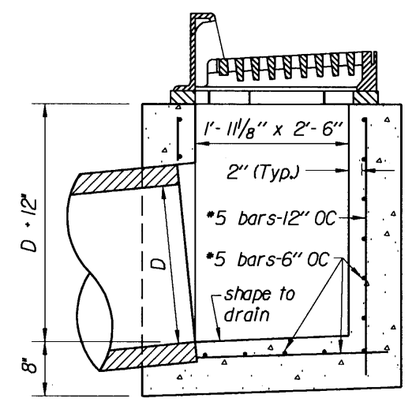

For minimum inside inlet dimensions only
SECTION A-A

Notes:

1. At the option of the Contractor walls less than 4 feet may be of concrete as shown.
2. Construct Type A inlets for pipes 24 inch and larger "For Ample Headroom", unless otherwise directed by the CO.
3. Construct inlets parallel to the roadway centerline and grade. Adapt inlets as directed by the CO.
4. For frames and gratings minor variations in design and dimensions are permitted to allow manufacturers standards.

U.S. DEPARTMENT OF TRANSPORTATION
FEDERAL HIGHWAY ADMINISTRATION
EASTERN FEDERAL LANDS HIGHWAY DIVISION

DETAIL

INLET, TYPE 6A

DETAIL APPROVED FOR USE --/----

REVISED:

DETAIL E604-5

8/22/2007 11:30:58 AM M:\Projects\natr\3d30e12\proj_dev\CADD\Std-Det\dt604x05.dgn

NPS NO.	REG	STATE	PROJECT	SHEET NO.
604 / 42,994	SE	MS	PRA-NATR 3D30,E12	S-9

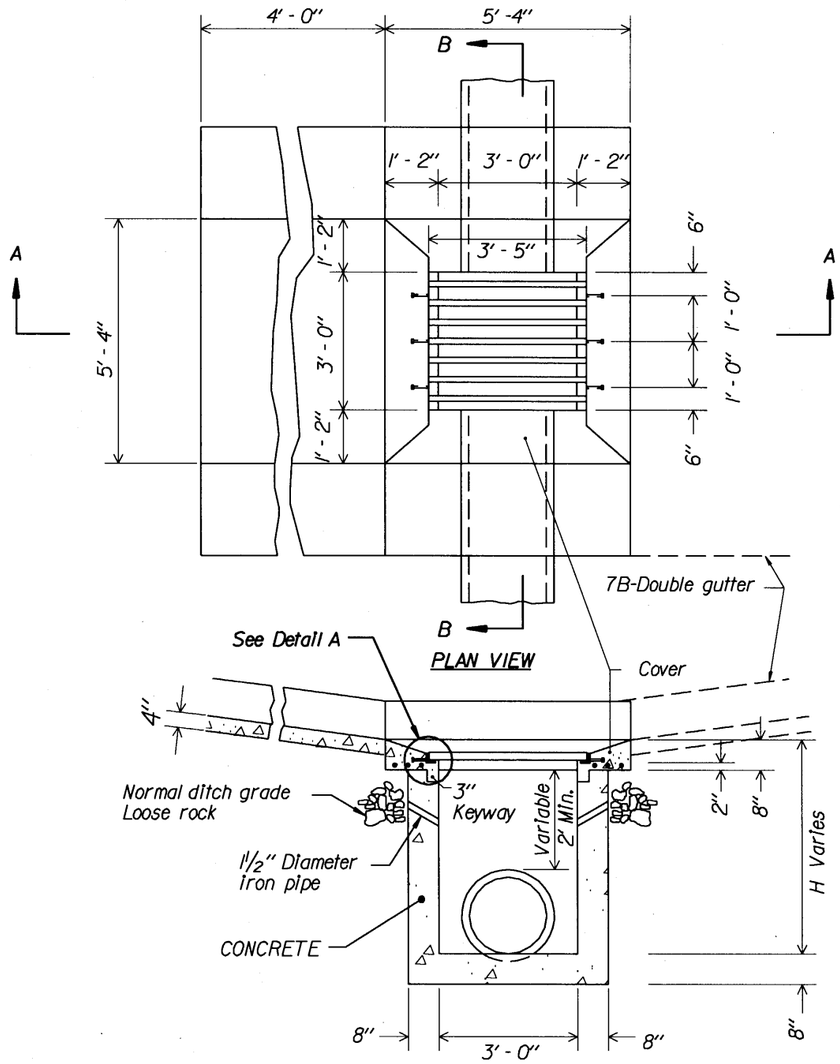

PLAN VIEW

SECTION A-A

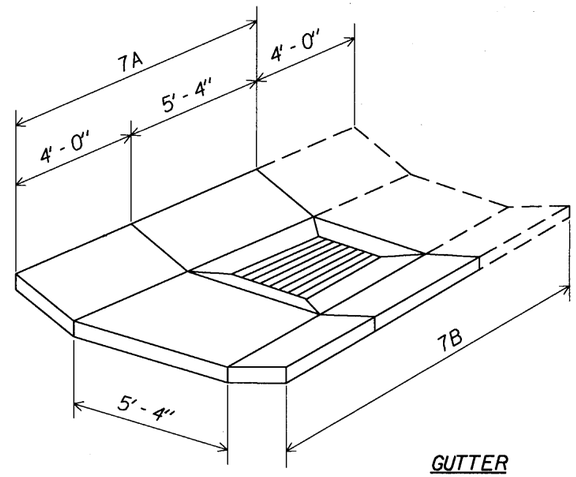

GUTTER

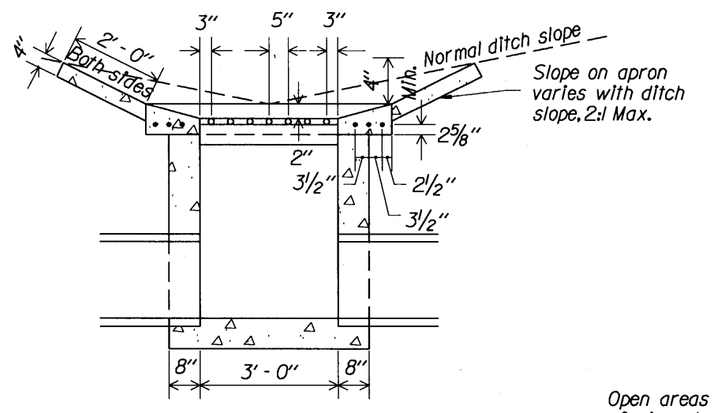

SECTION B-B

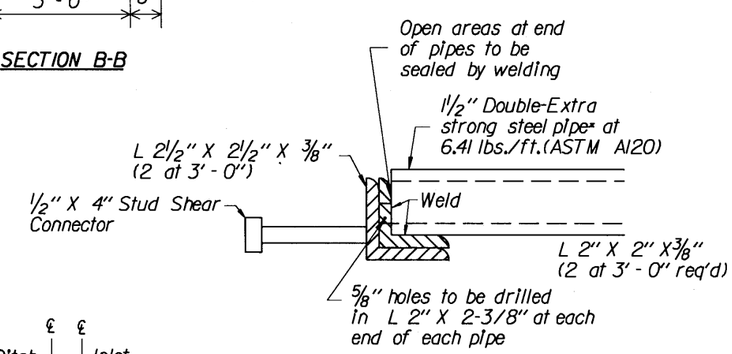

DETAIL A

* 2" Dia. Solid Steel Bar at 10.68 lbs/ft may be substituted.

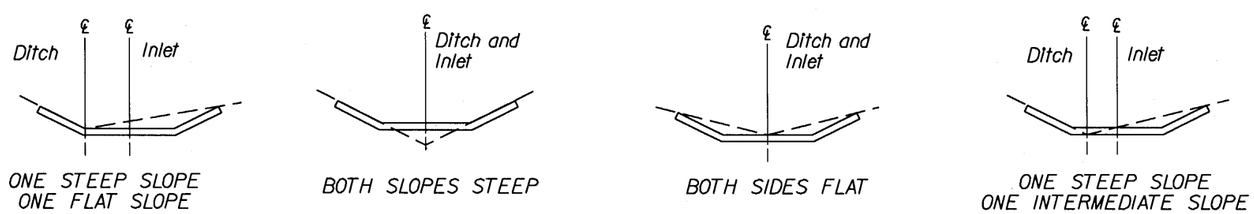

ONE STEEP SLOPE
ONE FLAT SLOPE

BOTH SLOPES STEEP

BOTH SIDES FLAT

ONE STEEP SLOPE
ONE INTERMEDIATE SLOPE

TYPICAL GUTTER PLACEMENT

Notes:

1. 7A = single gutter when inlet is on a grade.
2. 7B = double gutter when inlet is in a sag between two grades
3. All concrete quantities are calculated without pipe areas deducted.
4. Ditch to be warped to tie smoothly into inlet gutter.
5. Transition all paved ditches to meet inlet gutter.
6. Outside dimensions of grate to be 3' - 4" X 2' - 11¾"
7. Maximum depth (H) to be 12' - 8"
8. Fabricate galvanized grate in accordance with AASHTO-M111.
9. Alternate methods of anchoring angle iron will be acceptable if approved by the CO.

APPROXIMATE QUANTITIES

Pipe Size	12"	15"	18"	24"	30"	36"
Min. depth H	2'-0"	2'-3¼"	2'-6½"	3'-1"	3'-7½"	4'-2"
C.Y. Conc. Inlet	0.947	1.045	1.143	1.339	1.535	1.731

Increment per foot of additional depth, (H)=0.362 Cu.Yds.

Cu.Yds. Concrete for gutter 7A=0.724, & B=1.184

Cu.Yds. Concrete for Cover=0.423 (Not included above)

Reinforcing Steel For Cover=63 lbs.

U.S. DEPARTMENT OF TRANSPORTATION
FEDERAL HIGHWAY ADMINISTRATION
FEDERAL LANDS HIGHWAY

STANDARD

INLET TYPE 7A AND 7B FOR USE WITH 12" to 36" PIPES

STANDARD APPROVED FOR USE --/----

REVISED:

STANDARD 604-8

8/22/2007 11:32:05 AM M:\Projects\natr\3d30,e12\proj_dev\CADD\Std-Det\st604x08.dgn

NPS NO.	REG	STATE	PROJECT	SHEET NO.
604 / 42,994	SE	MS	PRA-NATR 3D30,E12	S-10

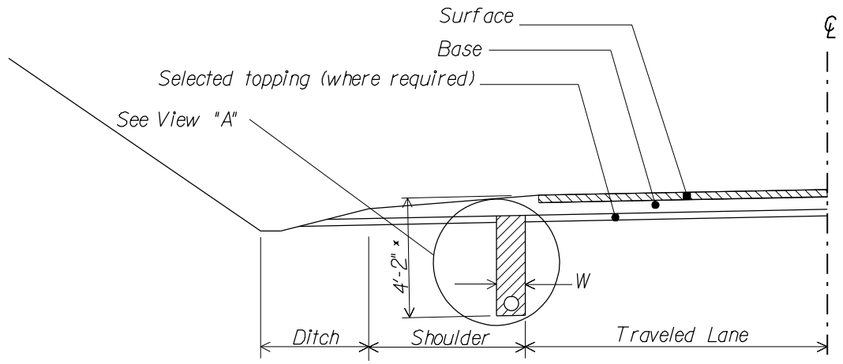

SHOULDER

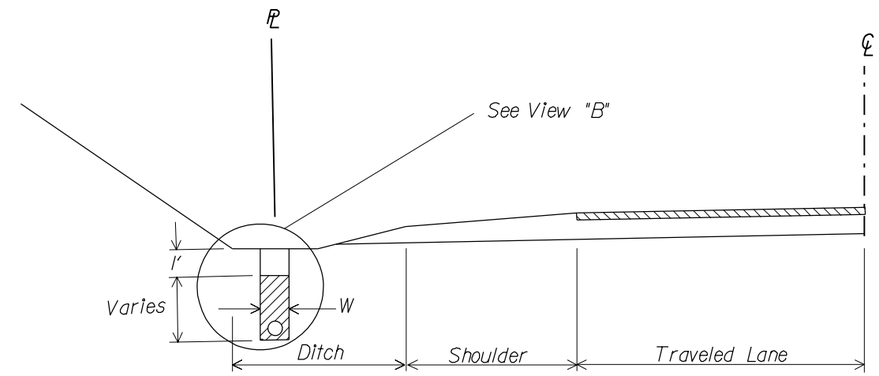

FLAT BOTTOM DITCH

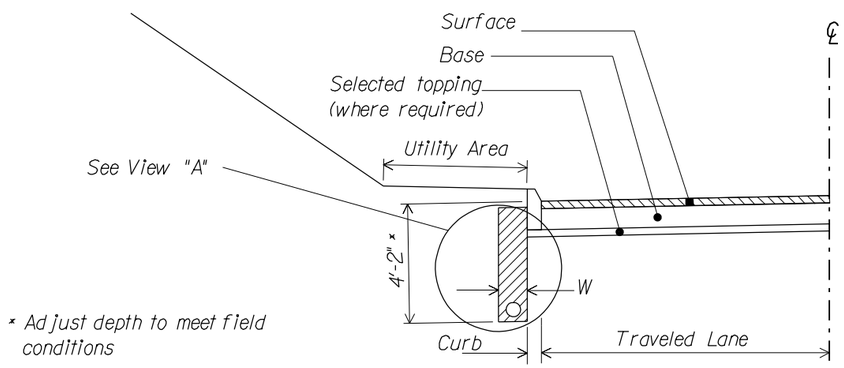

* Adjust depth to meet field conditions

CURB AND GUTTER

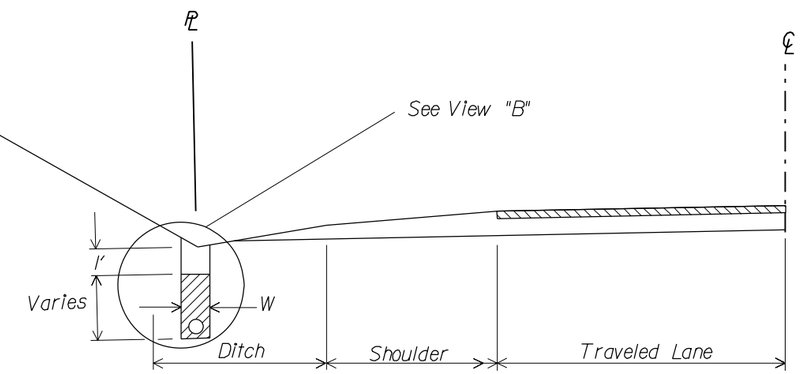

VEE DITCH

NOTES:

1. Location of pipe underdrains may be adjusted by the CO.
2. Minimum underdrain grade is 0.5 percent.

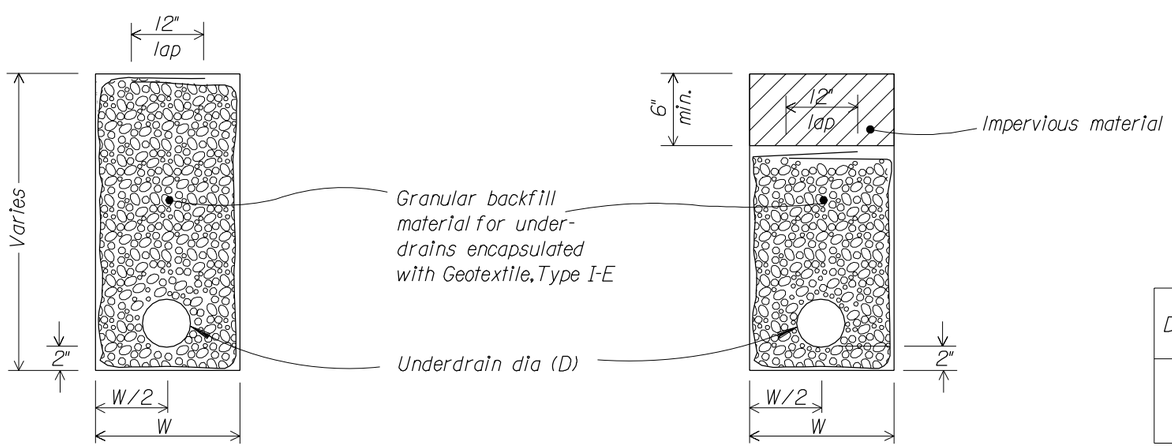

VIEW A

VIEW B

DIAMETER (D)	MINIMUM WIDTH (W)
4"	12"
6"	15"

U.S. DEPARTMENT OF TRANSPORTATION
FEDERAL HIGHWAY ADMINISTRATION
EASTERN FEDERAL LANDS HIGHWAY DIVISION

DETAIL

UNDERDRAIN, FOR PAVEMENT AND DITCHES

DETAIL APPROVED FOR USE --/----

REVISED:

DETAIL E605-1

8/30/2007 10:23:06 AM M:\Projects\natr\3d30,e12\proj_dev\CADD\Std-Det\dt605x01.dgn

NPS NO.	REG	STATE	PROJECT	SHEET NO.
604 / 42,994	SE	MS	PRA-NATR 3D30,E12	S-11

NOTES:

1. The approximate shape of the Portland Cement Concrete waterway is an arc with a radius of 2.9 feet.
2. At inlets and other special locations, widen and shape paved waterway to drain.
3. Construct Portland Cement Concrete waterway in uniform sections 20 feet in length, except closure sections are not less than 5 feet in length. Place expansion joints, with curtain walls at 100 foot intervals.
4. At the outlet end of each Portland Cement Concrete waterway, construct a curtain wall on the downstream end of the last section of waterway.

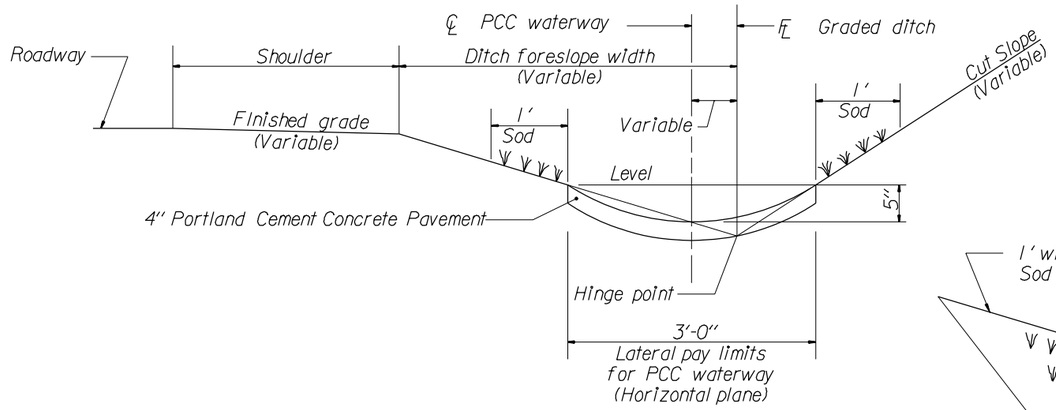

PORTLAND CEMENT CONCRETE WATERWAY

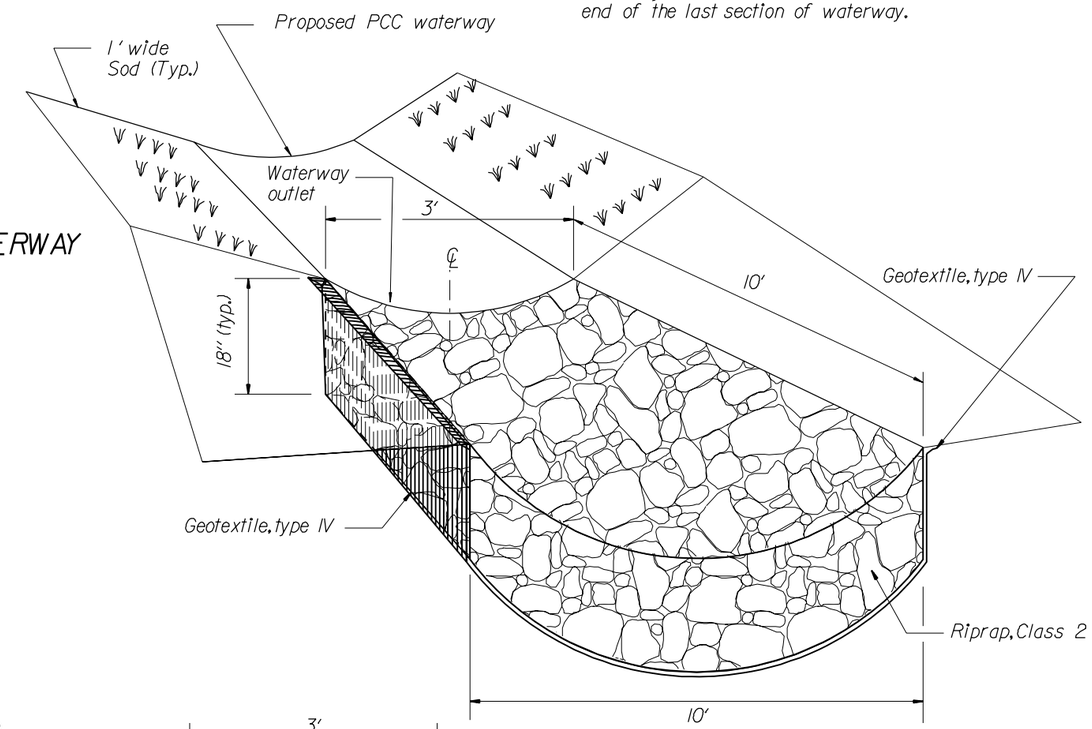

RIPRAP BASIN AT PAVED WATERWAY OUTLET

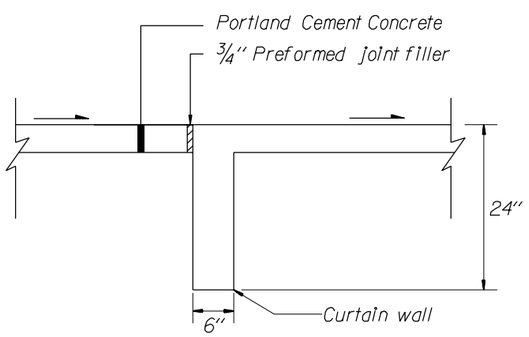

SECTION A-A

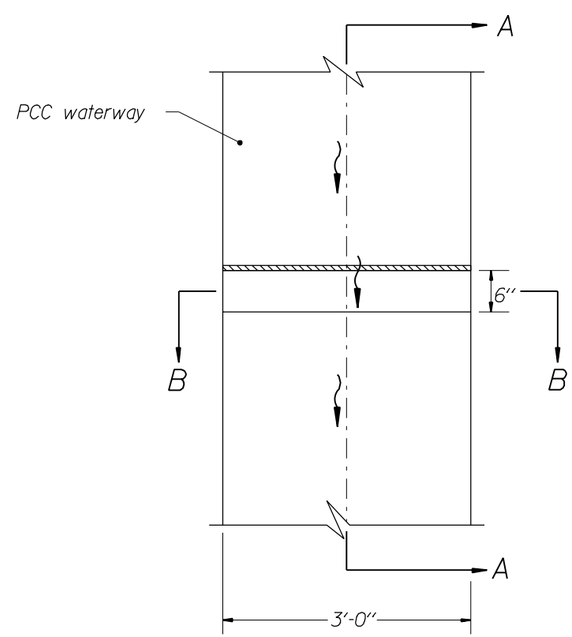

PLAN

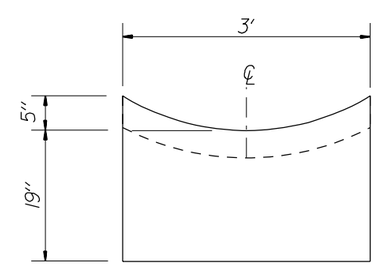

SECTION B-B

EXPANSION JOINT FOR PORTLAND CEMENT CONCRETE WATERWAY

NOT TO SCALE

U.S. DEPARTMENT OF TRANSPORTATION
FEDERAL HIGHWAY ADMINISTRATION
EASTERN FEDERAL LANDS HIGHWAY DIVISION

DETAIL

PORTLAND CEMENT CONCRETE WATERWAY
TYPE 4

DETAIL APPROVED FOR USE --/----

REVISED: 4/29/02

DETAIL
E608-A

8/30/2007 10:23:55 AM M:\Projects\natr\3d30e12\proj_dev\CADD\Std-Det\dt608x01.dgn

NPS NO.	REG	STATE	PROJECT	SHEET NO.
604 42,994	SE	MS	PRA-NATR 3D30,E12	S-12

Note:

1. Place 3-inches, minimum aggregate bed course under all curb and gutter.
2. Place preformed expansion joint filler at intervals no longer than 36 feet.

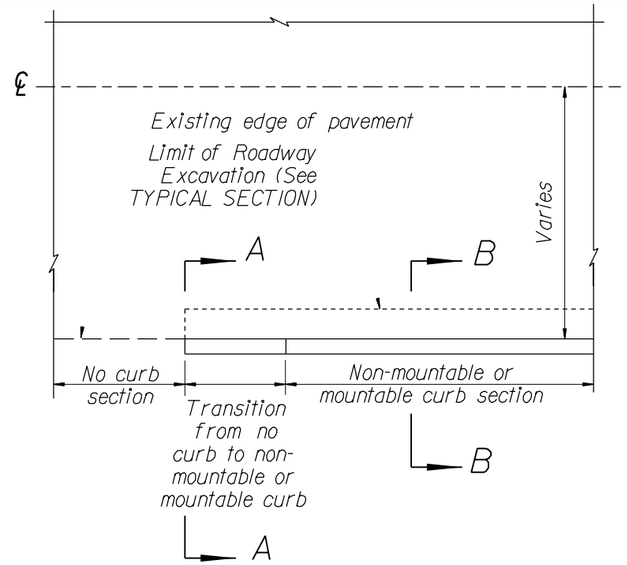

PLAN CURB TRANSITION

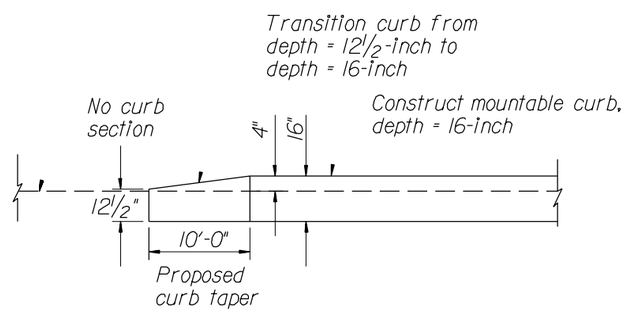

PROFILE CURB TRANSITION (MOUNTABLE CURB)

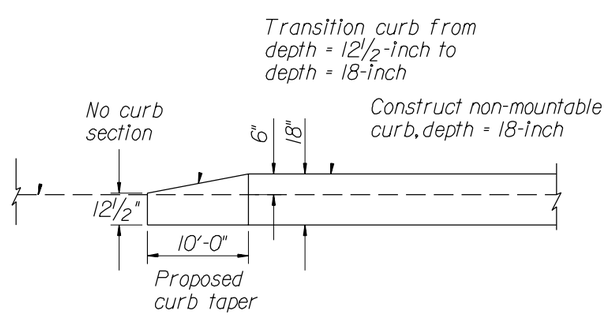

PROFILE CURB TRANSITION (NON-MOUNTABLE CURB)

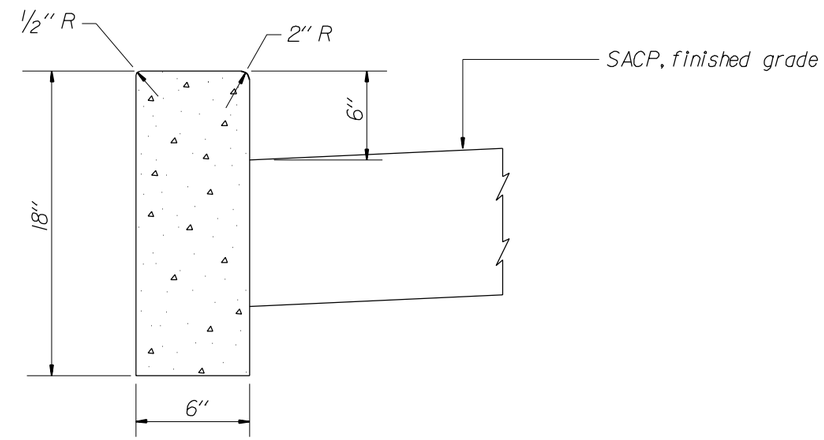

18-INCH DEPTH (NON- MOUNTABLE)

NOT TO SCALE

U.S. DEPARTMENT OF TRANSPORTATION
FEDERAL HIGHWAY ADMINISTRATION
EASTERN FEDERAL LANDS HIGHWAY DIVISION

DETAIL

PORTLAND CEMENT CONCRETE CURB

DETAIL APPROVED FOR USE --/----

REVISED:

DETAIL E609-A

8/30/2007 10:24:28 AM M:\Projects\natr\3d30,e12\proj_dev\CADD\Std-Det\dt609x01.dgn

NPS NO.	REG	STATE	PROJECT	SHEET NO.
604 42,994	SE	MS	PRA-NATR 3D30,E12	S-13

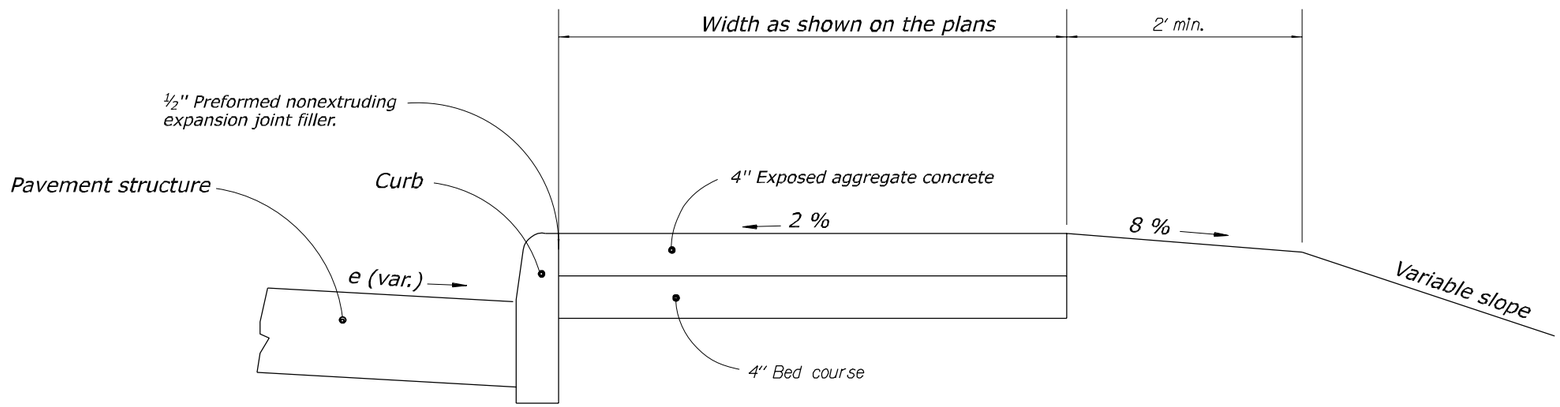

SIDEWALK WITH CURB

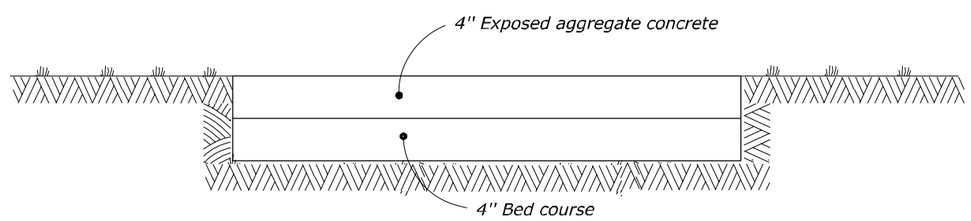

SIDEWALK

NOTES:

1. *Place ¾-inch transverse expansion joints at intervals of not more than 60 feet to match adjacent curb expansion joints.*
2. *Place dummy joints at intervals equal to the width of the sidewalk as shown on the plans.*

NO SCALE

U.S. DEPARTMENT OF TRANSPORTATION
FEDERAL HIGHWAY ADMINISTRATION
EASTERN FEDERAL LANDS HIGHWAY DIVISION

U.S. CUSTOMARY DETAIL

EXPOSED AGGREGATE CONCRETE SIDEWALK

DETAIL APPROVED FOR USE 02/2007

REVISED: 04/07

DETAIL E615-A

8/30/2007 10:26:23 AM M:\Projects\natr\3d30el2\proj_dev\CADD\Std-Det\st615\01_detail.dgn

NPS NO.	REG	STATE	PROJECT	SHEET NO.
604 / 42.994	SE	MS	PRA-NATR 3D30,E12	S-14

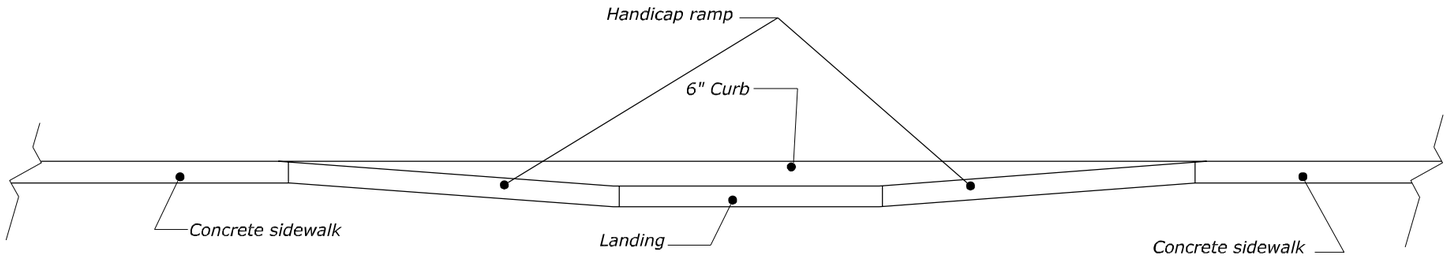

ELEVATION

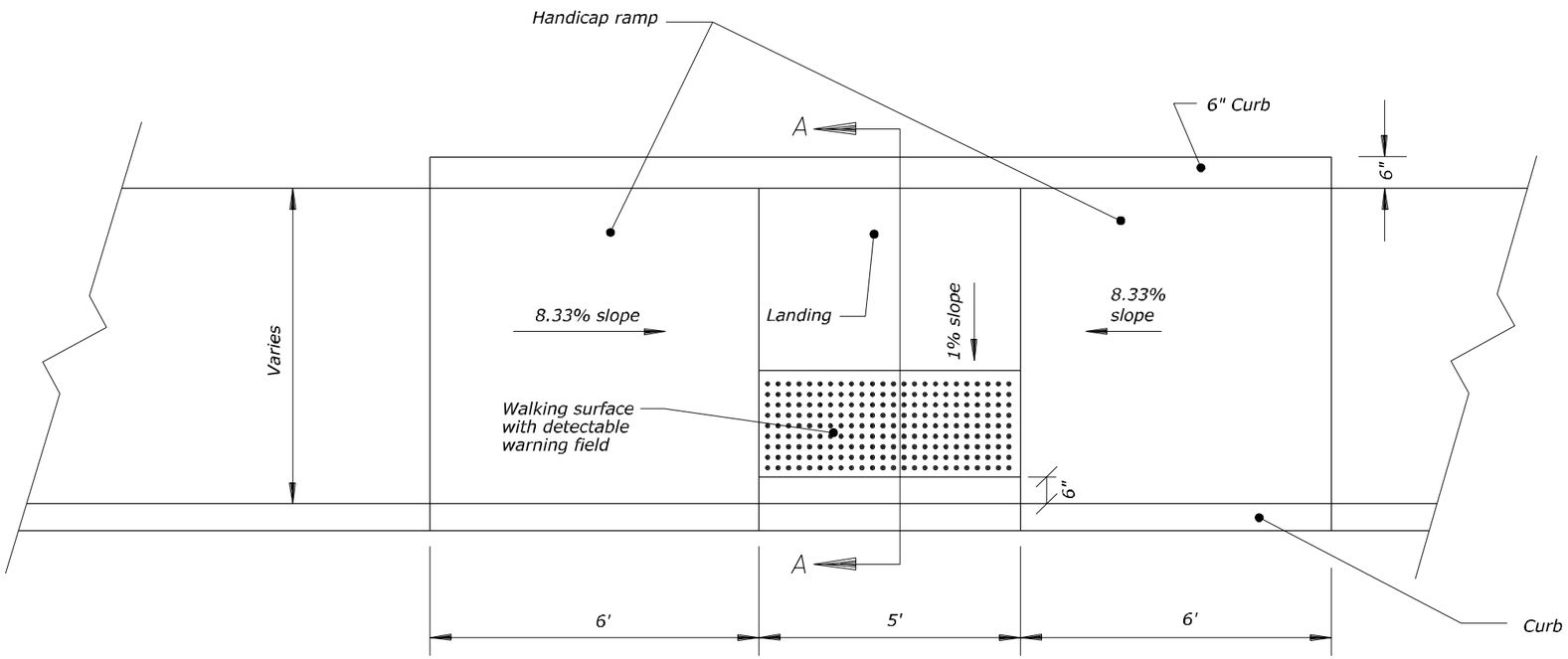

PLAN

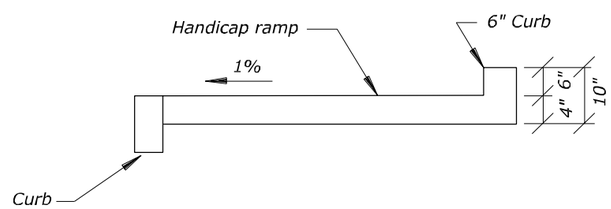

SECTION A-A

NOTE:

1. The maximum cross slopes of ramps must not exceed 2% in any direction.
2. Use a coarse broom finish running perpendicular to the slope to create a slip resistant surface on concrete ramp surfaces, exclusive of the detectable warning fields.
3. Construct curb ramp perpendicular to the curb. Avoid skewing the ramp face.
4. Construct ramp transitions between walks, gutters, or streets that are flush and free of abrupt vertical changes not to exceed 2.5 inches.
5. Locate drainage inlets and manholes outside of ramp walking surfaces or landings.

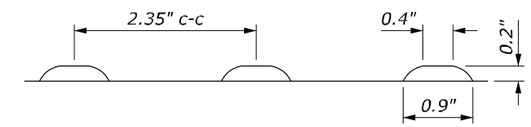

SECTION
TRUNCATED DOME

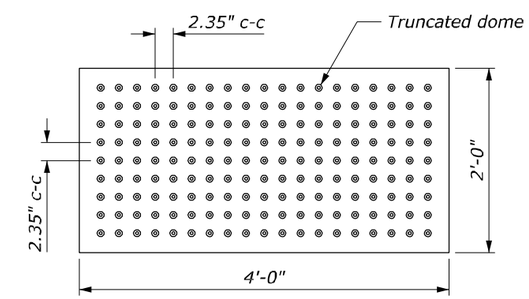

PLAN

DETECTABLE WARNING FIELD WITH TRUNCATED DOMES

NO SCALE

U.S. DEPARTMENT OF TRANSPORTATION
FEDERAL HIGHWAY ADMINISTRATION
FEDERAL LANDS HIGHWAY

U.S. CUSTOMARY STANDARD

WHEELCHAIR RAMP CURB CUT

STANDARD APPROVED FOR USE --/----

REVISED:
DRAFT: 1/2004

STANDARD 615-B

8/30/2007 10:29:01 AM:\Projects\natr\3d30,e12\proj_dev\CADD\Std-Det\st61501.dgn

NPS NO.	REG	STATE	PROJECT	SHEET NO.
604 42,994	SE	MS	PRA-NATR 3D30,E12	S-15

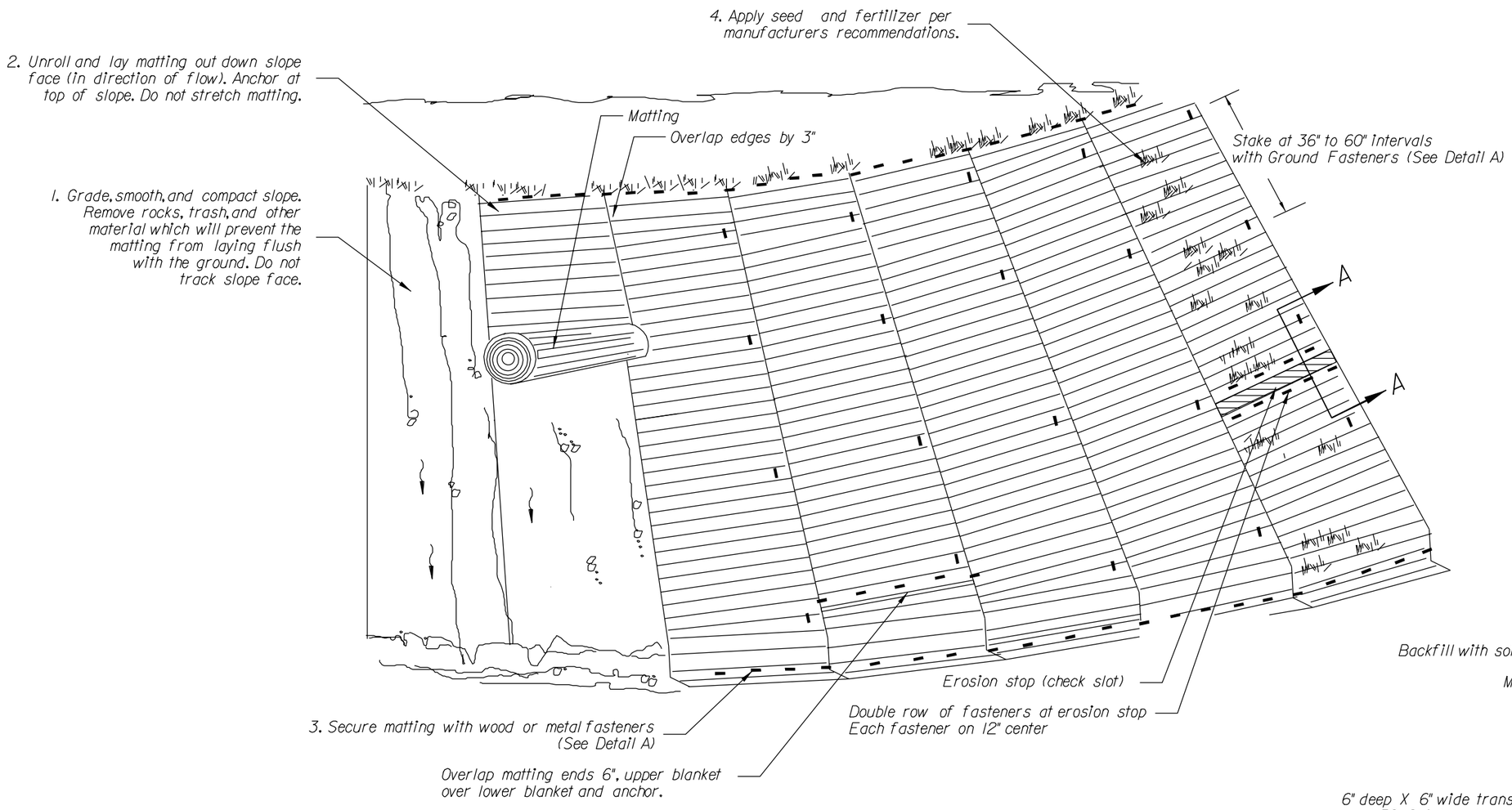

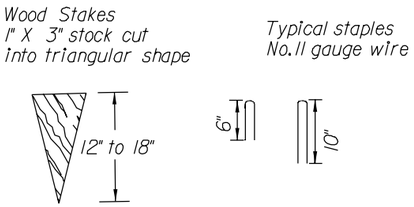

DETAIL A
Typical Ground Fasteners

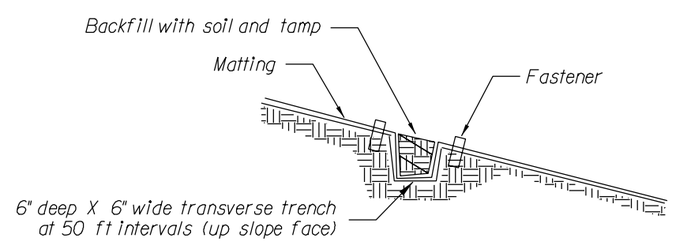

SECTION A-A
Erosion Stop (Check Slot) Detail

DETAIL FOR STABILIZING SLOPES WITH MATTING

NO SCALE

U.S. DEPARTMENT OF TRANSPORTATION
FEDERAL HIGHWAY ADMINISTRATION
EASTERN FEDERAL LANDS HIGHWAY DIVISION

DETAIL

SLOPE STABILIZATION WITH MATTING

DETAIL APPROVED FOR USE --/----

REVISED:

DETAIL E629-1

8/31/2007 10:31:49 AM M:\Projects\natr\3d30el2\proj_dev\CADD\Std-Det\dt629x01.dgn

NPS NO.	REG	STATE	PROJECT	SHEET NO.
604 42,994	SE	MS	PRA-NATR 3D30,E12	S-16

ROADSIDE SIGN RURAL DISTRICT

NO SHOULDER

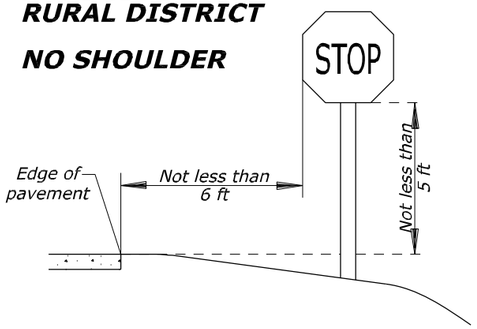

WARNING SIGN WITH ADVISORY SPEED PLAQUE RURAL DISTRICT

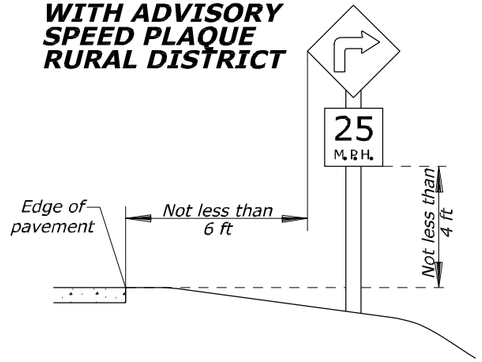

ROADSIDE SIGN BUSINESS OR RESIDENCE DISTRICT

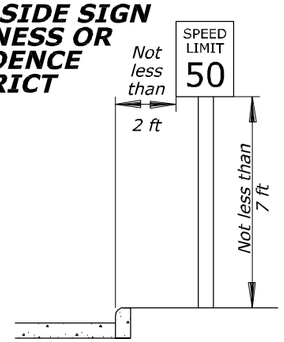

ROADSIDE SIGN RURAL DISTRICT

WITH SHOULDER

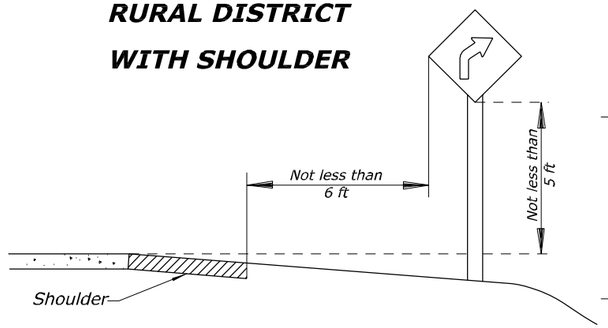

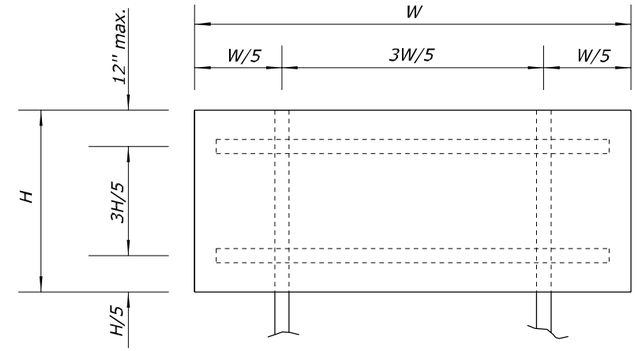

DOUBLE POST

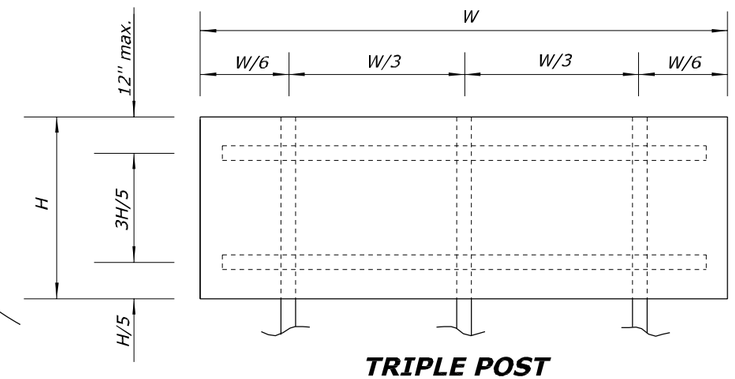

TRIPLE POST

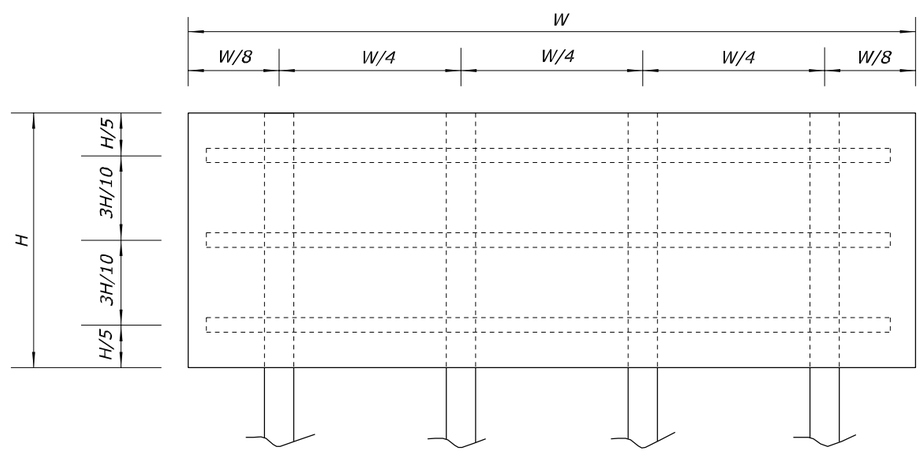

QUADRUPLE POST

Notes:

1. Locations and height to be in accordance with the 'Manual on Uniform Traffic Control Devices for Streets and Highways' (MUTCD), latest edition.
2. Use wood battens bolted to post at vertical spacings not to exceed 30-inches.
3. Use double posts if W is over 3 feet.
4. For sign punching details, see the blank standards in the "Standard Highway Signs" as specified in the MUTCD, latest edition.
5. For steel posts, provide a ¼" x 6" soil plate. Use the same type of steel for the soil plate as for the post. Soil plate is not required for breakaway design.
6. For signs requiring posts sizes 6 x 6 and greater, signs are considered to be non-breakaway if multiple posts are required and posts cannot be spaced a minimum of 7 feet apart. Place non-breakaway signs outside the clearzone or shield with approved barrier. Do not place holes in posts of non-breakaway signs.
7. Depth, D, is to be in accordance with the 'Manual on Uniform Traffic Control Devices for Streets and Highways' (MUTCD), latest edition, Section 2A.21 and the AASHTO manual 'Specifications for Structural Supports for Highway Signs, Luminaires, and Traffic Signals', latest edition or as directed by the CO. D (min) is given in CHART A.

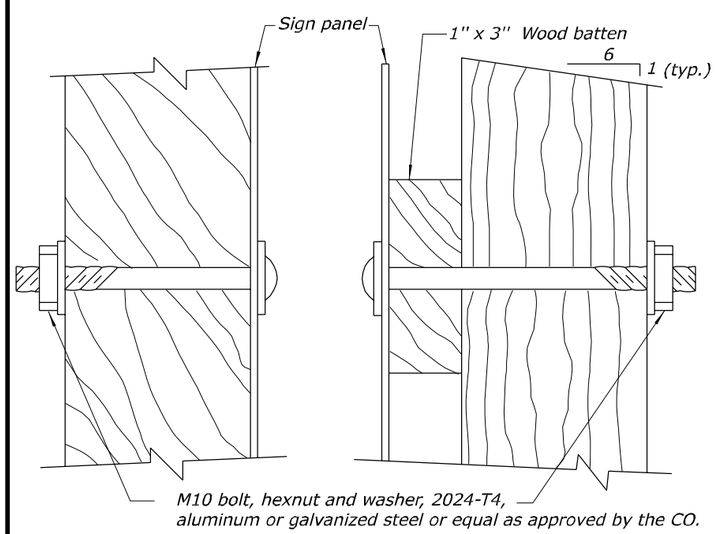

WITHOUT BATTEN **WITH BATTEN**

FASTENER DETAIL

CHART B

Post Size	Hole Diameter
4" x 4"	None Required
4" x 6"	1.5"
6" x 6"	2"
6" x 8"	3"

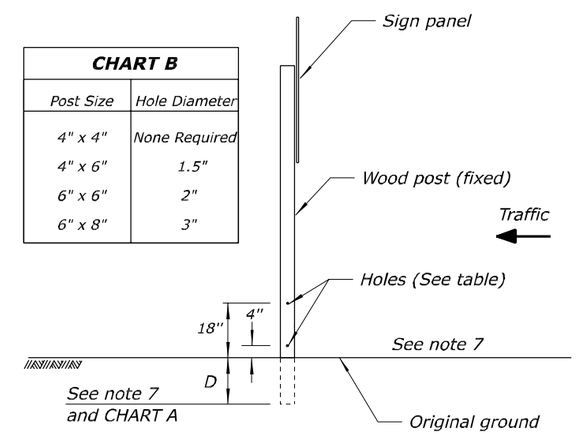

BREAKAWAY SUPPORT DETAIL

CHART A

Post Size (Inch)	D (min.) *	Maximum Sign Area (sq. ft.)			
		Single Post	Double Post	Triple Post	Quadruple Post
4 x 4 (Wood)	3'	10	20		
4 x 6 (Wood)	4'	15	35	45	60
6 x 6 (Wood)	4'	20	50	75	100

* See note 7

NO SCALE

U.S. DEPARTMENT OF TRANSPORTATION
FEDERAL HIGHWAY ADMINISTRATION
EASTERN FEDERAL LANDS HIGHWAY DIVISION

U.S. CUSTOMARY DETAIL

SIGN STRUCTURES

DETAIL APPROVED FOR USE

REVISED: 03/07

DETAIL E633-01

8/31/2007 10:33:06 AM M:\Projects\natr\3d30ae12\proj_dev\CADD\Std-Det\sf63301_detail.dgn

NPS NO.	REG	STATE	PROJECT	SHEET NO.
604 42,994	SE	MS	PRA-NATR 3D30,E12	S-17

STEEL POST FOOTING DATA TABLE

POST SIZE	NOMINAL SIZE (IN.)	STUB		FOOTING	
		PROJ.	LENGTH	DIA.	MINIMUM DEPTH
a	2 X 2	4"	2'	12"	3'
b	3 X 4	4"	2'	15"	3'
c	4 X 6	4"	2'	15"	3'

STEEL POSTS FOR GROUND MOUNTED SIGNS

POST SIZE	NOMINAL SIZE (IN.)	BOLT SPECIFICATIONS	BASE CONNECTION DATA TABLE (Inches)									
			A	B	C	D	E	F	t_1	t_2	w	R
a	2 X 2	5/8"/0 X 2 1/2" HS 450 IN. - LBS.	6½	4	5	1¾	¾	1⅛	⅝	3/16	3/16	11/16
b	3 X 4		8½	4	7	1¾	¾	1⅛	⅝	3/16	¼	11/16
c	4 X 6	5/8"/0 X 3" HS 450 IN - LB	10	5	8½	2½	¾	1¼	¾	¼	5/16	11/16

FUSE PLATE DATA TABLE (Inches)

POST SIZE	G	H	J	K	L	M	N	d_1	t_3	c_1	BOLT DIAM.	TORQUE FT.-LBS.
a	4	2¼	1⅛	2	⅞	9/16	⅝	7/16	¼	¼	⅜	200
b	4	2¼	1⅛	3	1¼	⅞	⅝	9/16	5/16	¼	½	200
c	4½	2⅜	1¼	4	1¾	1⅛	⅞	11/16	⅜	⅜	⅝	200

NOTES:

1. Breakaway design is not required for signs placed behind protective barriers.
2. Breakaway assembly to be installed in the direction of major traffic.
3. The multiple post breakaway detail to be used on single posts in medians where exposed to opposing lanes of traffic.
4. Fuse plates are to be used on multiple post installations only.
5. The breakaway plates, only are to be painted brown to match the final appearance of the weathering steel posts.

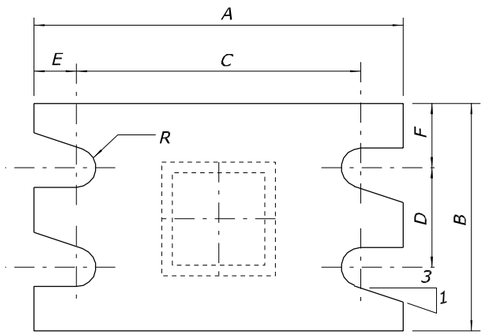

SECTION A-A

BREAKAWAY PLATE

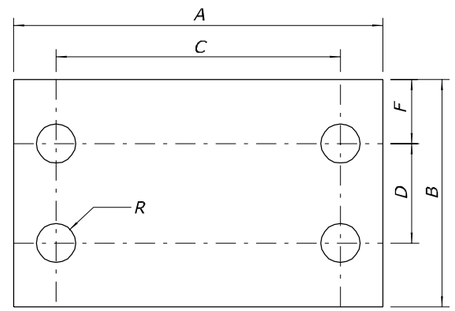

BOND BREAKING PLATE

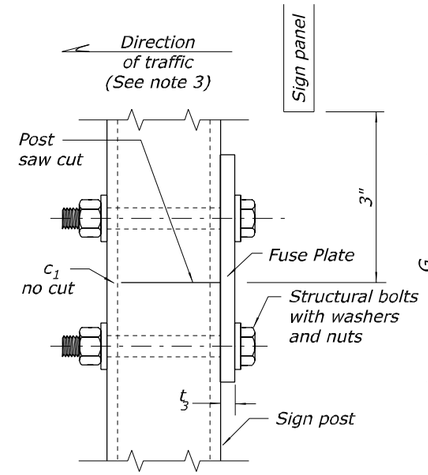

SIDE ELEVATION

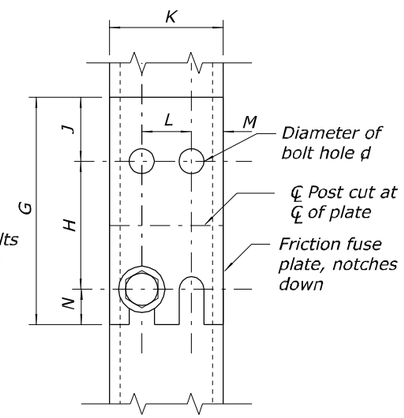

FRONT ELEVATION (See Note 5)

FUSE PLATE

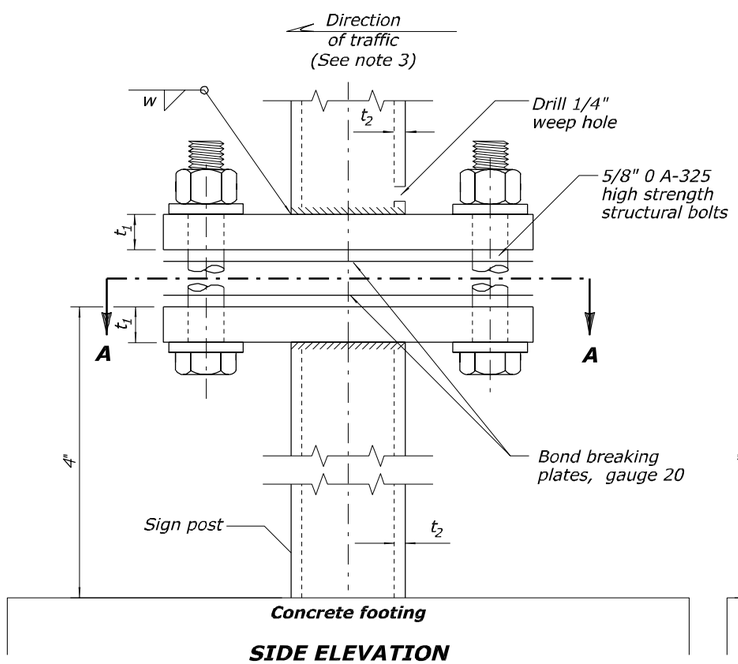

SIDE ELEVATION (See Note 4)

MULTIPLE POST

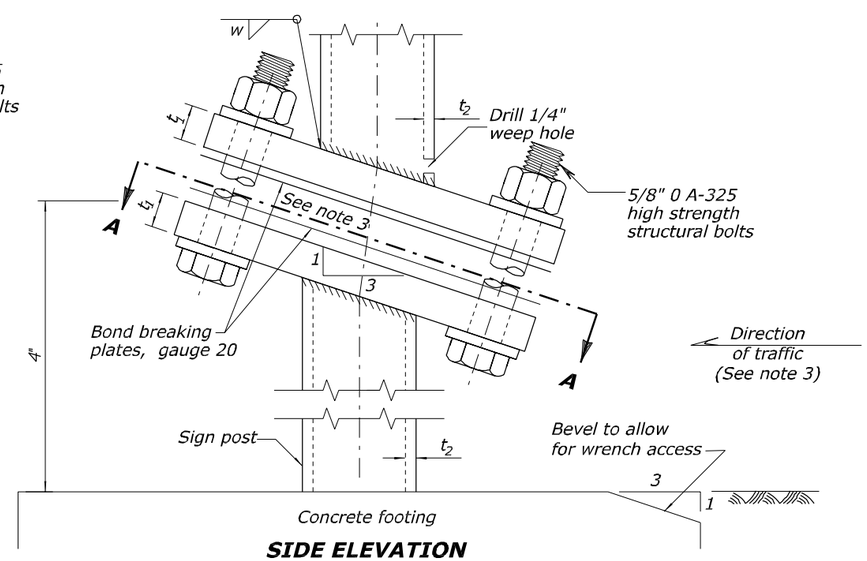

SIDE ELEVATION

SINGLE POST

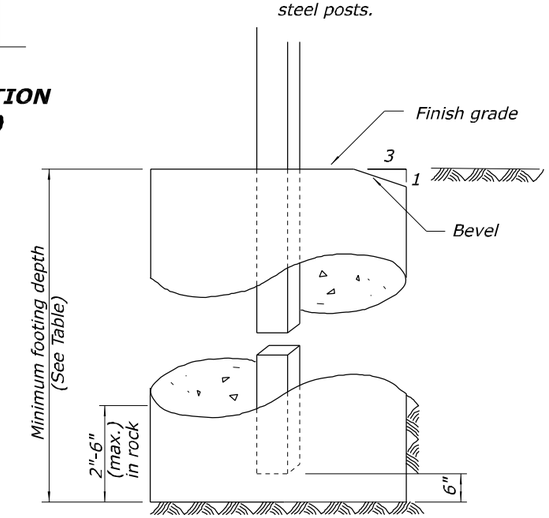

CONCRETE FOOTING DETAILS

NO SCALE

U.S. DEPARTMENT OF TRANSPORTATION
FEDERAL HIGHWAY ADMINISTRATION
EASTERN FEDERAL LANDS HIGHWAY DIVISION

U.S. CUSTOMARY DETAIL

BREAKAWAY SIGN SUPPORT, WEATHERING STEEL

DETAIL APPROVED FOR USE

REVISED: 07/98 03/07

DETAIL E633-02

8/31/2007 10:33:57 AM M:\Projects\natr\3d30al2\proj_dev\CADD\Std-Dets\t63302_detail.dgn

NPS NO.	REG	STATE	PROJECT	SHEET NO.
604 / 42,994	SE	MS	PRA-NATR 3D30,E12	S-18

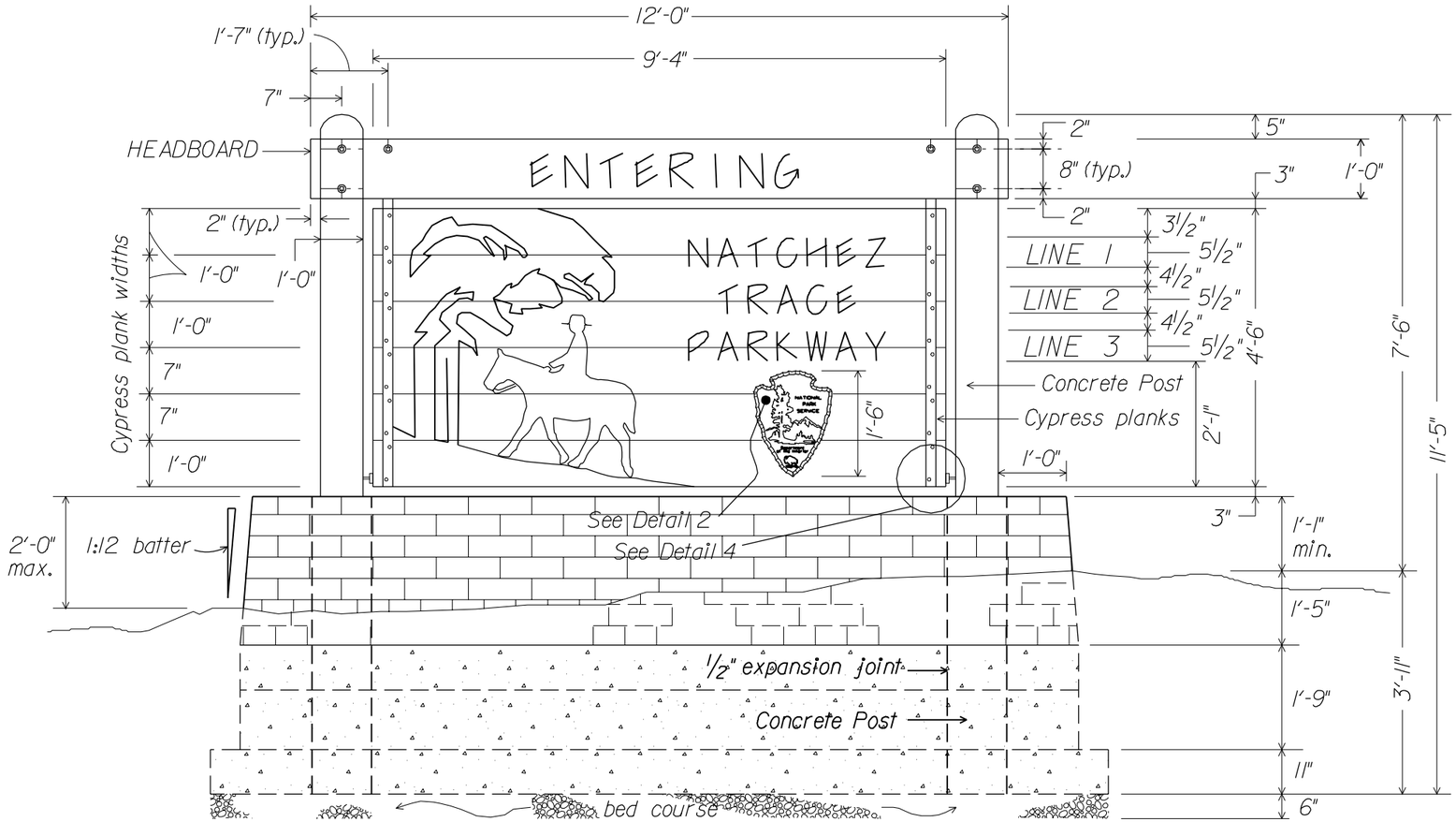

FRONT VIEW

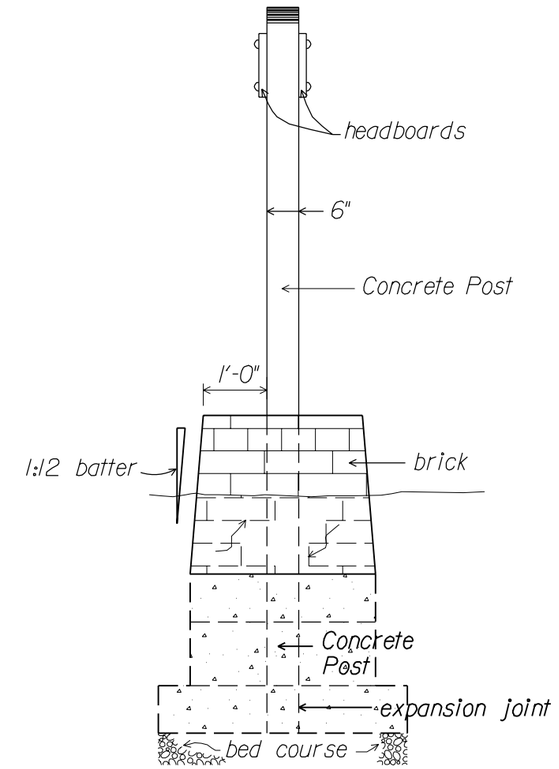

SIDE VIEW

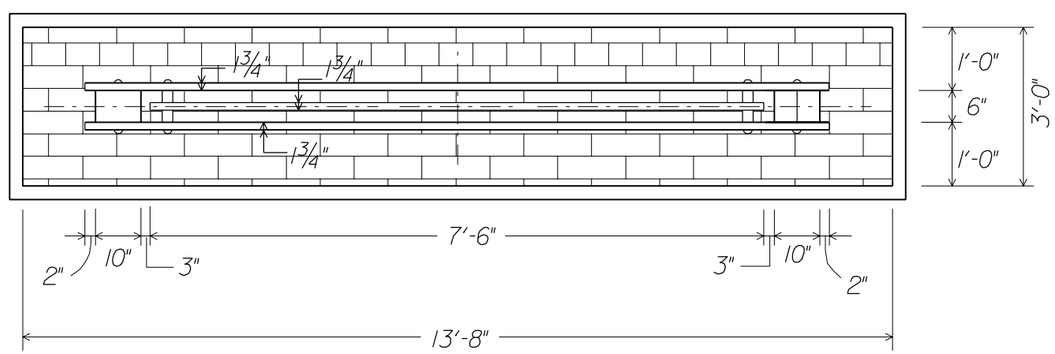

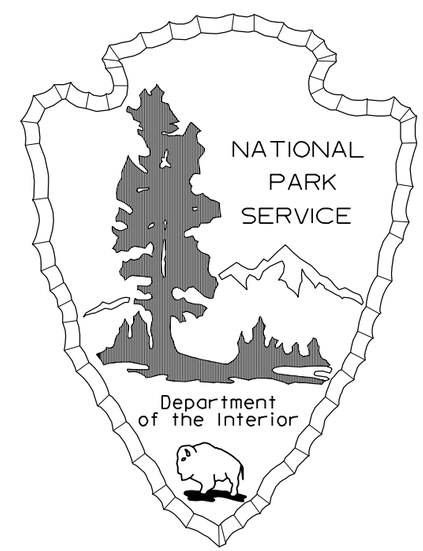

NATIONAL PARK SERVICE
PROVIDED ARROWHEAD

U.S. DEPARTMENT OF TRANSPORTATION
FEDERAL HIGHWAY ADMINISTRATION
EASTERN FEDERAL LANDS HIGHWAY DIVISION

DETAIL

PARKWAY ENTRANCE SIGN

sheet 1 of 3

DETAIL APPROVED FOR USE --/----

REVISED:

DETAIL
E633-A

8/31/2007 10:35:04 AM M:\Projects\natr\3d30,e12\proj_dev\CADD\Std-Det\nlalldt2.dgn

NPS NO.	REG	STATE	PROJECT	SHEET NO.
604 / 42,994	SE	MS	PRA-NATR 3D30,E12	S-19

NOTES:

1. Drop expansion joint 1/2" below top of stone masonry and fill the joints with approved silicone sealant.
2. Paint strap iron, 1/4" thick, 2" wide with one (1) coat rust oleum rust inhibitive primer or approved equal, and two (2) coats of ryan bulletin enamel, B-170 glass black manufactured by Ryco, Inc. Chico, CA, distributed by Sherwin Williams, or approved equal.
3. Paint bolts, fasteners, screws, and washers with one (1) coat of rust oleum rust inhibitive primer or approved equal, and two coats of paint to match adjoining surface.

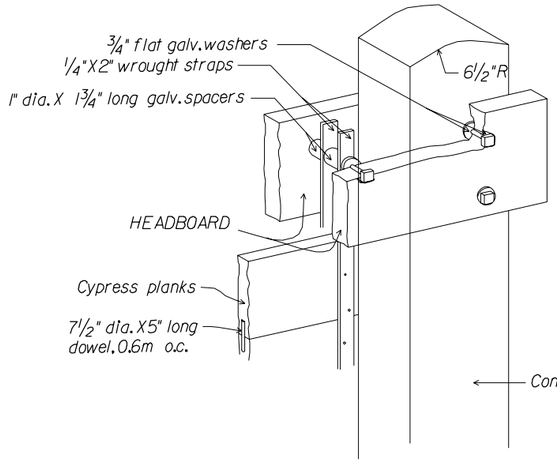

DETAIL 1

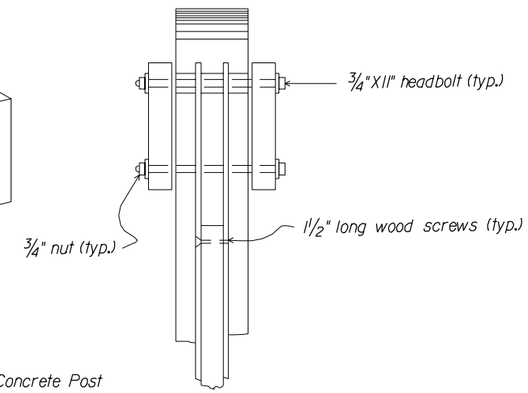

DETAIL 3

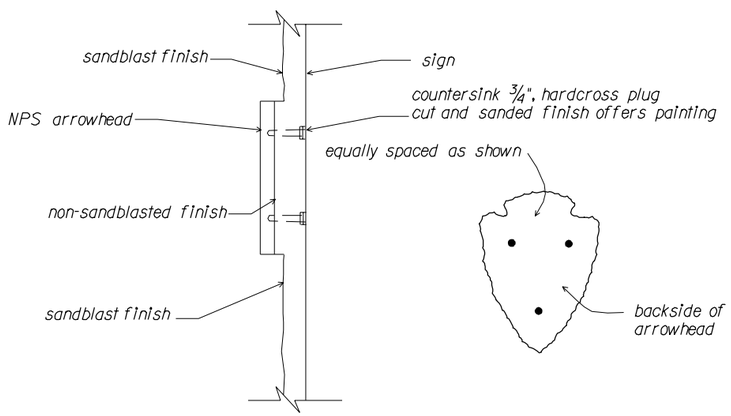

DETAIL 2

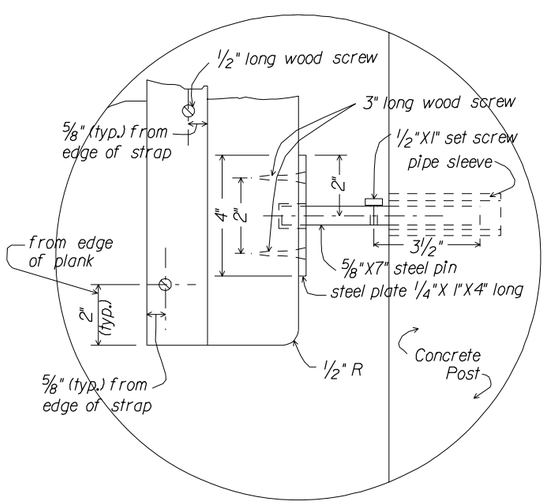

DETAIL 4

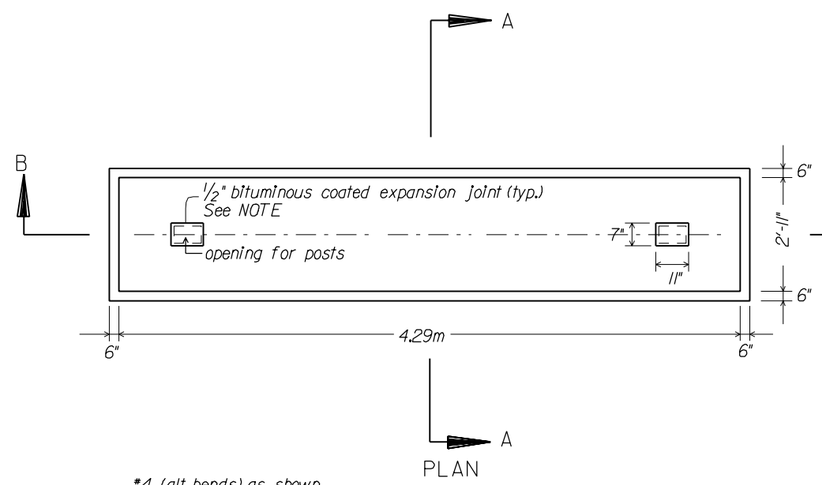

PLAN

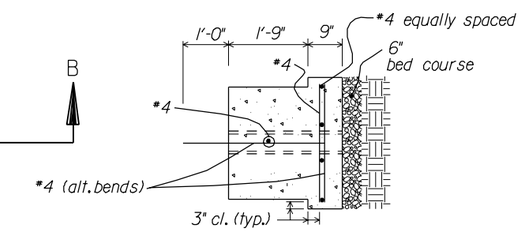

SECTION A-A

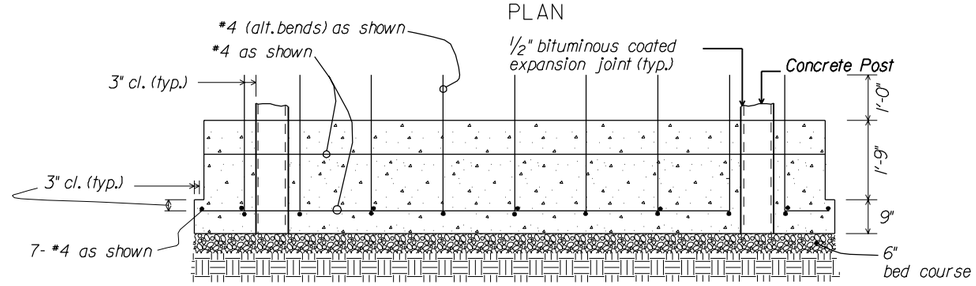

SECTION B-B

CONCRETE FOOTING DETAILS

U.S. DEPARTMENT OF TRANSPORTATION
FEDERAL HIGHWAY ADMINISTRATION
EASTERN FEDERAL LANDS HIGHWAY DIVISION

DETAIL

PARKWAY ENTRANCE SIGN

sheet 2 of 3

DETAIL APPROVED FOR USE --/----

REVISED:

DETAIL E633-A

8/31/2007 10:35:42 AM M:\Projects\natr\3d30,e12\proj_dev\CADD\Std-Det\nlalldt2.dgn

NPS NO.	REG	STATE	PROJECT	SHEET NO.
604 / 42,994	SE	MS	PRA-NATR 3D30,E12	S-20

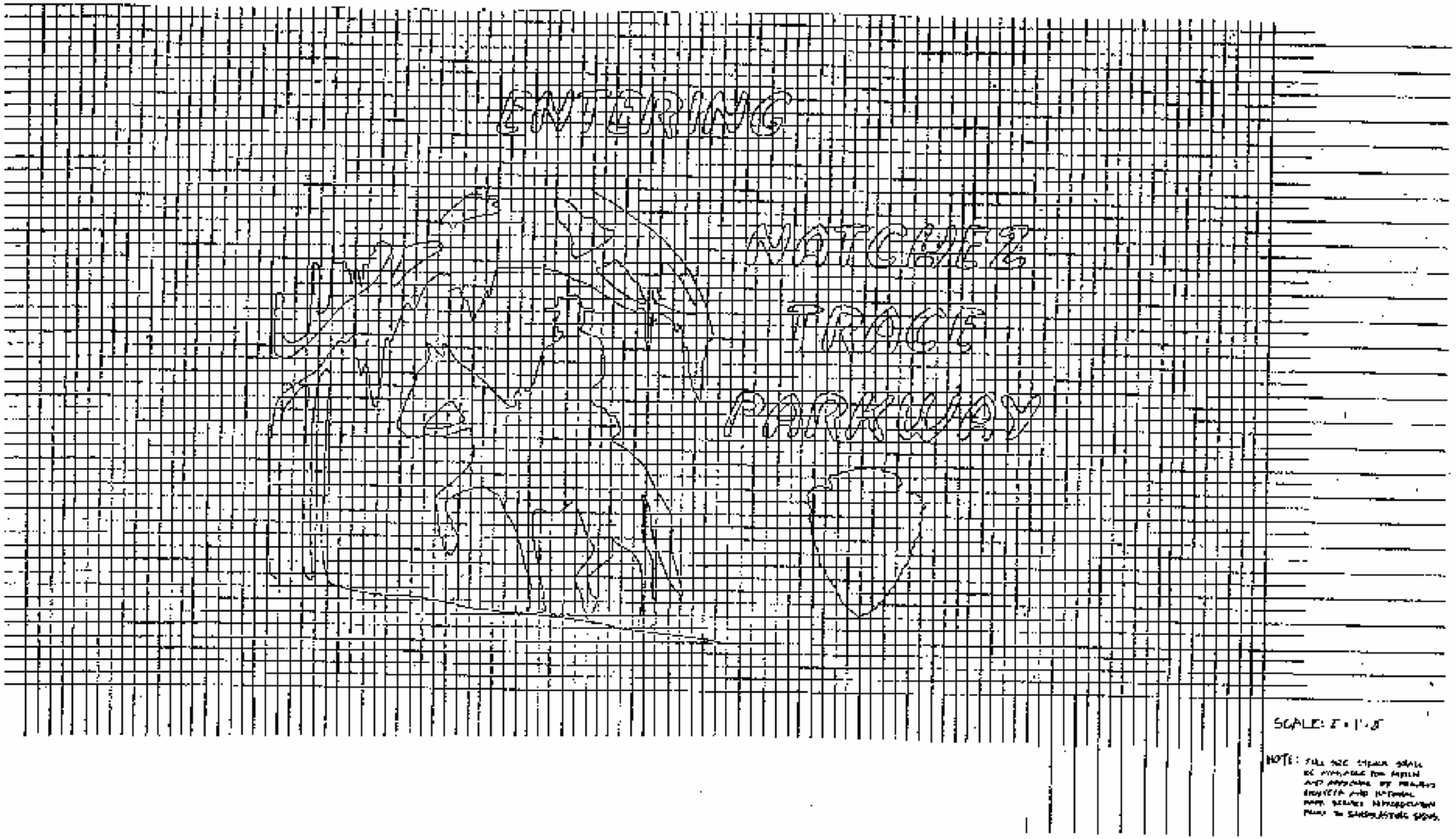

U.S. DEPARTMENT OF TRANSPORTATION
FEDERAL HIGHWAY ADMINISTRATION
EASTERN FEDERAL LANDS HIGHWAY DIVISION

DETAIL

PARKWAY ENTRANCE SIGN

sheet 3 of 3

DETAIL APPROVED FOR USE --/----

REVISED:

DETAIL
E633-A

8/31/2007 10:36:09 AM M:\Projects\natr\3d30pe12\proj_dev\CADD\Std-Det\nlaldt2.dgn

NPS NO	REG	STATE	PROJECT	SHEET NO.
604 / 42,994	SE	MS	PRA-NATR 3D30,E12	S-21

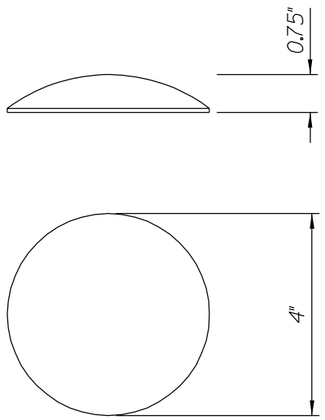

TYPE A

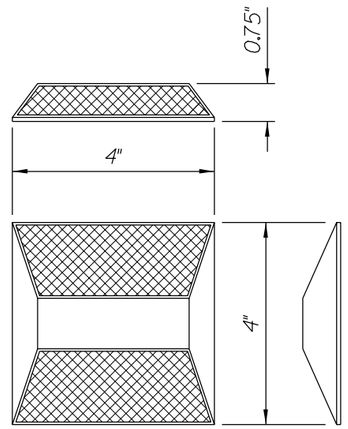

TYPE B

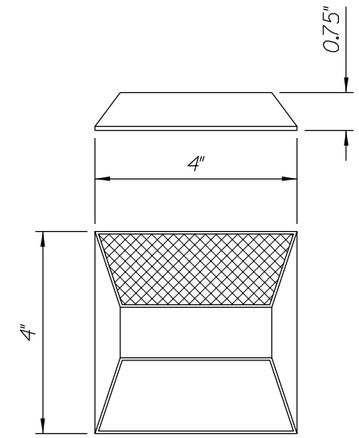

TYPE C

NON-SNOW PLOWABLE PAVEMENT MARKERS

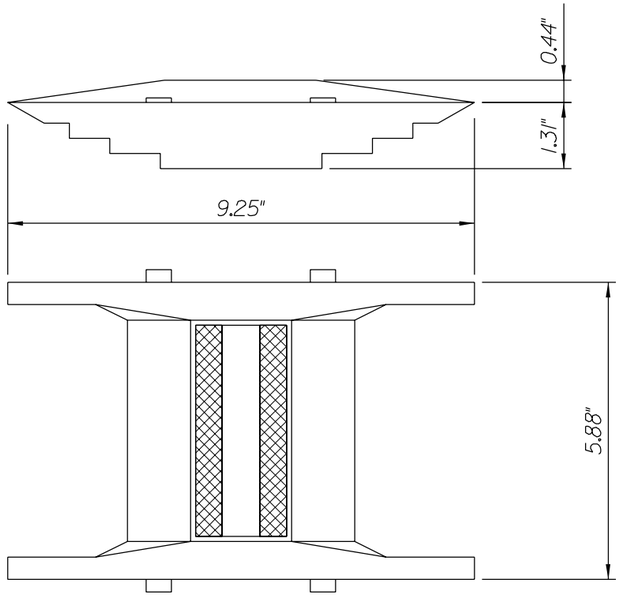

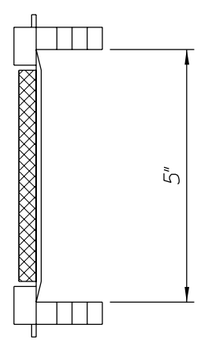

TYPE D

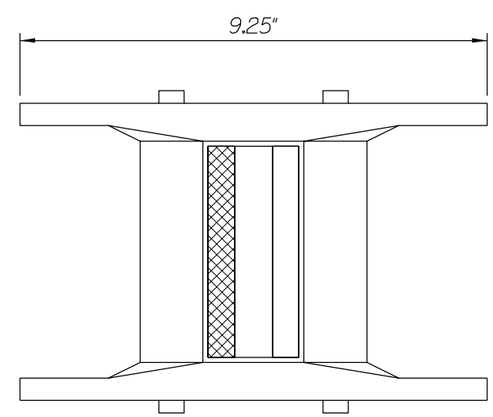

TYPE E

SNOW PLOWABLE PAVEMENT MARKERS

NOTES:

1. Colors of the reflective markers to be either clear (white), yellow or red as specified.

2. The shell of the marker to be of one color or a combination of colors the same as the reflector.

Reflective material

U.S. DEPARTMENT OF TRANSPORTATION
FEDERAL HIGHWAY ADMINISTRATION
EASTERN FEDERAL LANDS HIGHWAY DIVISION

DETAIL

RAISED PAVEMENT MARKERS

DETAIL APPROVED FOR USE 10/94

REVISED: 11/94

DETAIL E634-2

8/31/2007 10:37:11 AM M:\Projects\nat\3d30e12\proj_de\CADD\Std-Det\dt634x02.dgn

NPS NO.	REG	STATE	PROJECT	SHEET NO.
604 / 42,994	SE	MS	PRA-NATR 3D30,E12	S-22

NOTES:

1. All striping shall be in accordance with the Manual on Uniform Traffic Control Devices (MUTCD), latest edition.
2. Space and install Raised Pavement Markers in accordance with the MUTCD and as shown in this detail or as directed by the CO.

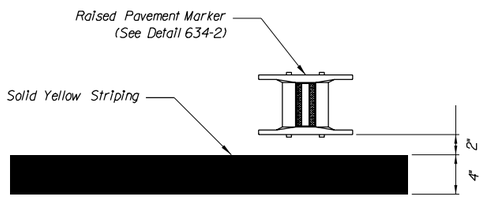

DETAIL A

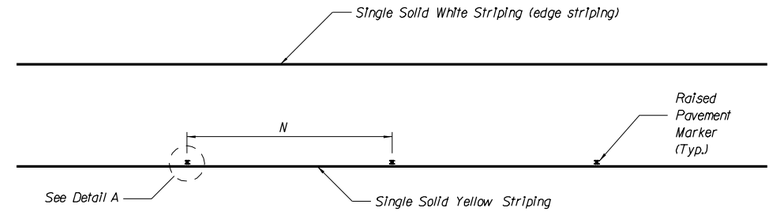

SINGLE SOLID YELLOW STRIPING
WITH RAISED PAVEMENT MARKERS

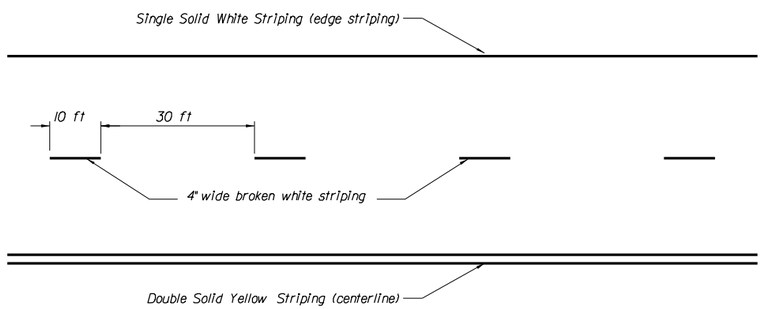

BROKEN SINGLE WHITE AND
DOUBLE SOLID YELLOW STRIPING

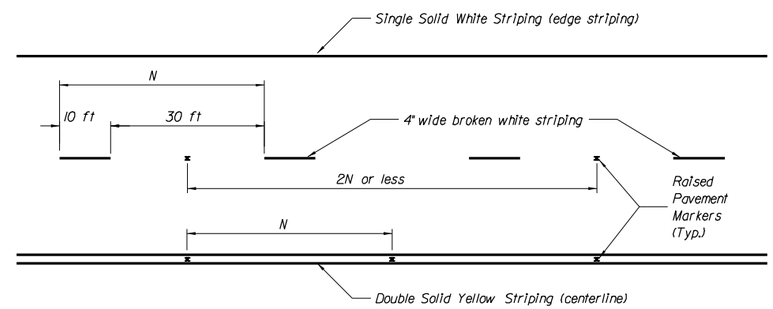

BROKEN SINGLE WHITE AND
DOUBLE SOLID YELLOW STRIPING
WITH RAISED PAVEMENT MARKERS

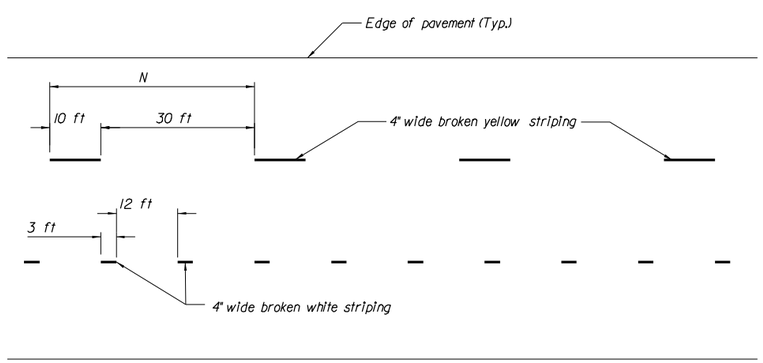

BROKEN SINGLE YELLOW AND
DOTTED WHITE STRIPING

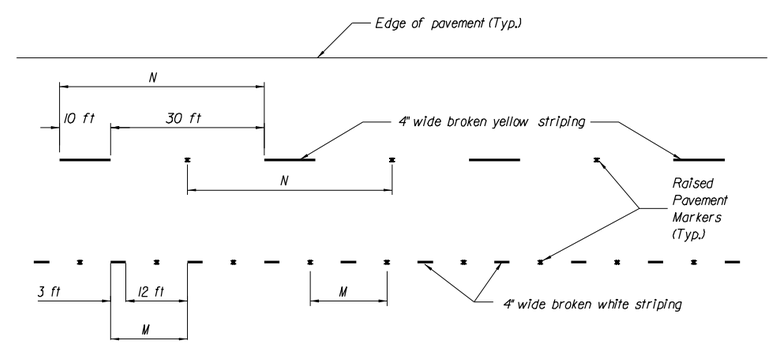

BROKEN SINGLE YELLOW AND
DOTTED WHITE STRIPING
WITH RAISED PAVEMENT MARKERS

U.S. DEPARTMENT OF TRANSPORTATION
FEDERAL HIGHWAY ADMINISTRATION
EASTERN FEDERAL LANDS HIGHWAY DIVISION

DETAIL

PAVEMENT MARKINGS
WITH AND WITHOUT
RAISED PAVEMENT MARKERS

DETAIL APPROVED FOR USE --/----

REVISED:

DETAIL
E634-3

8/31/2007 10:37:40 AM M:\Projects\natr\3d30el2\proj_dev\CADD\Std-Def\df634x03.dgn

NPS NO	REG	STATE	PROJECT	SHEET NO.
604 / 42,994	SE	MS	PRA-NATR 3D30.E12	S-23

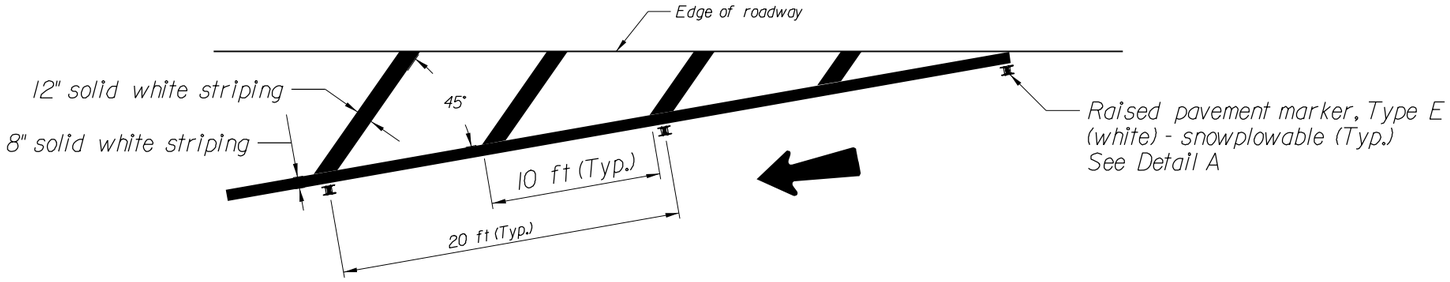

ONE-WAY TRAFFIC -- LANE SHIFT

NOTE:

All striping shall be in accordance with the Manual on Uniform Traffic Control Devices (MUTCD) latest edition.

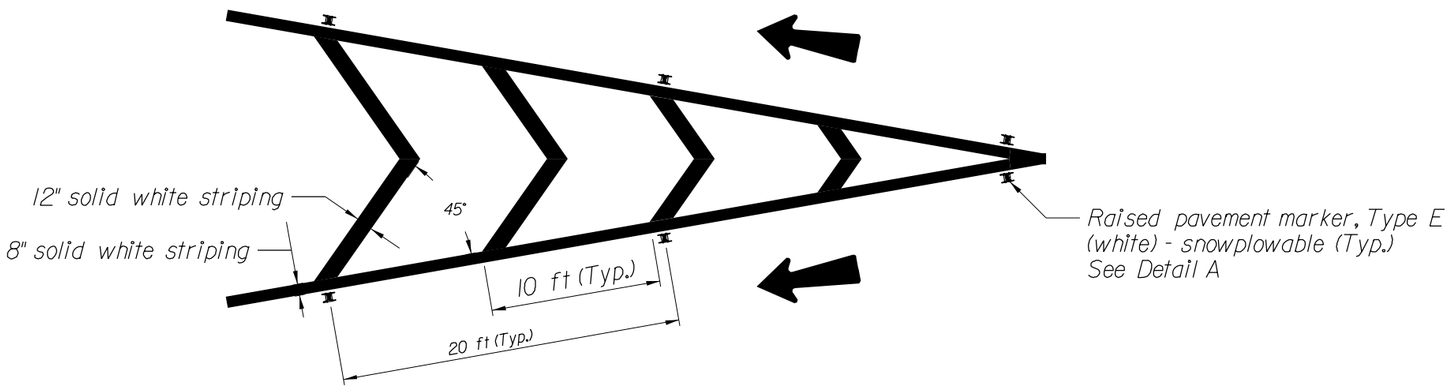

ONE-WAY TWO-LANE TRAFFIC -- LANES SEPARATE

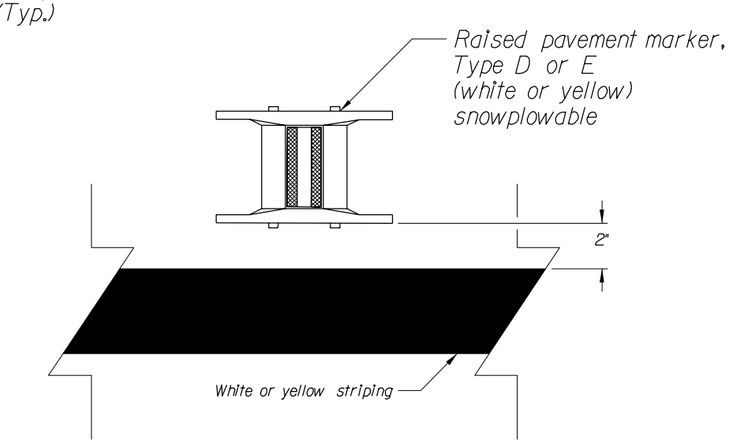

DETAIL A

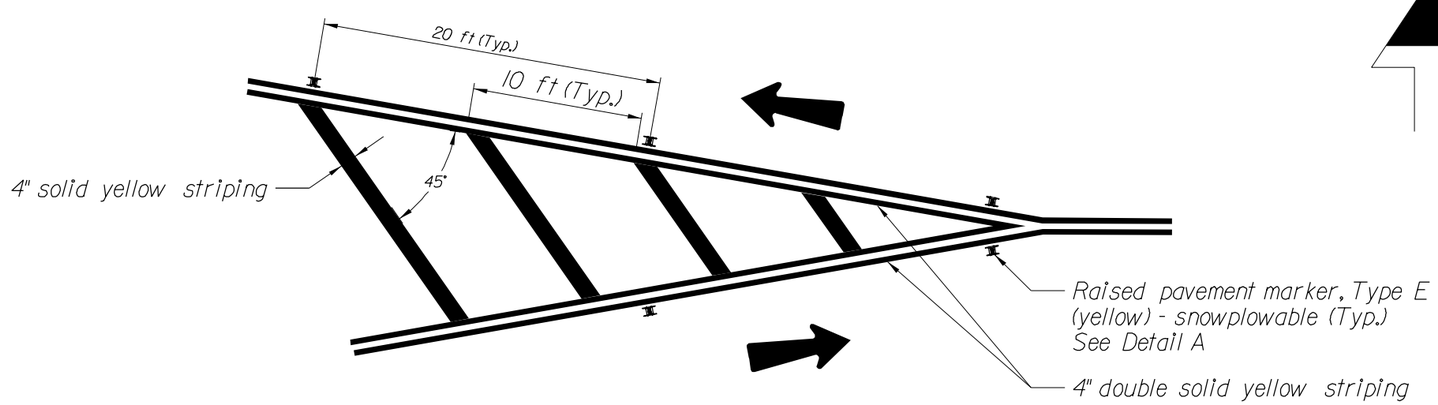

TWO-WAY TWO-LANE TRAFFIC -- LANES SEPARATE

U.S. DEPARTMENT OF TRANSPORTATION
FEDERAL HIGHWAY ADMINISTRATION
EASTERN FEDERAL LANDS HIGHWAY DIVISION

DETAIL

PAVEMENT MARKERS IN NEUTRAL AREAS

WITH RAISED PAVEMENT MARKERS

DETAIL APPROVED FOR USE --/----

REVISED:

DETAIL E634-4

8/31/2007 10:38:23 AM M:\Projects\natr\3d30.el2\proj_dev\CADD\Std-Det\dt634x04.dgn

NPS NO.	REG	STATE	PROJECT	SHEET NO.
604 42,994	SE	MS	PRA-NATR 3D30,E12	S-24

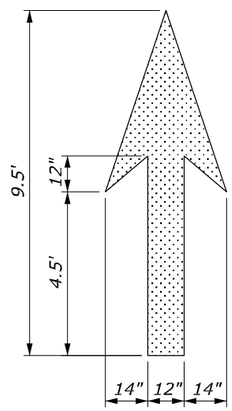

THROUGH LANE-USE ARROW

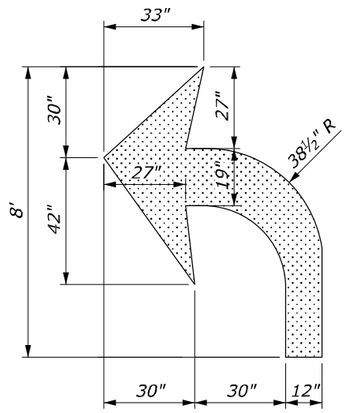

TURN LANE-USE ARROW

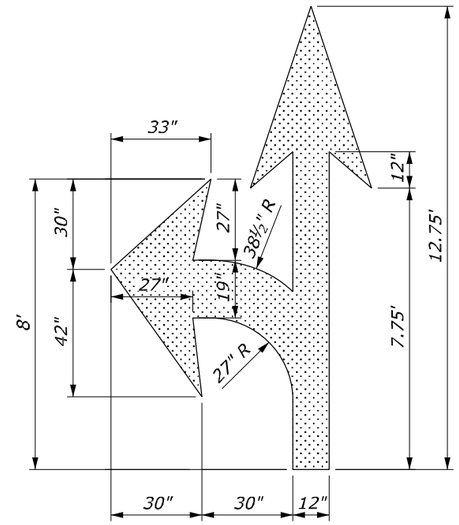

TURN AND THROUGH LANE-USE ARROW

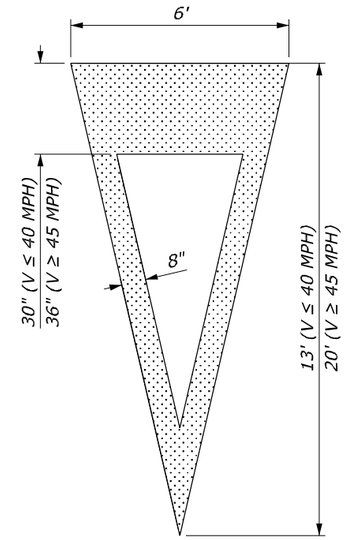

YIELD AHEAD TRIANGLE SYMBOL

NOTE:

1. *Place pavement word and symbol markings in accordance with the "Manual on Uniform Traffic Control Devices" (MUTCD), current edition.*
2. *All letters, numerals and symbols shall conform with the "Standard Highway Signs", current edition.*
3. *The Accessibility Parking Space marking only includes the accessibility symbol unless a border is indicated in the Striping Plans.*

PAVEMENT MARKING AREAS	
TYPE	*SQFT*
Through Lane-Use Arrow	*12*
Turn Lane-Use Arrow	*16*
Turn and Through Lane-Use Arrow	*26*
Yield Ahead Arrow (V<70 km/h)	*26*
Yield Ahead Arrow (V≥70 km/h)	*37*
Accessibility Marking (symbol only)	*2*
Accessibility Marking w/ border (White)	*5*
Accessibility Marking w/ border (Blue)	*9*
AHEAD Word Marking	*30*
ONLY Word Marking	*21*
SCHOOL Word Marking	*33*
STOP Word Marking	*22*
YIELD Word Marking	*24*

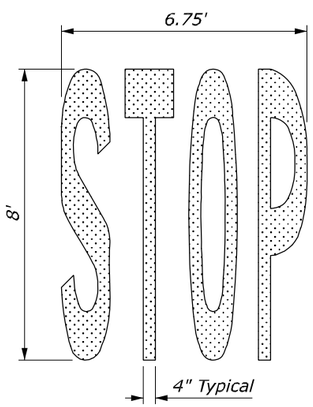

"STOP" WORD MARKING

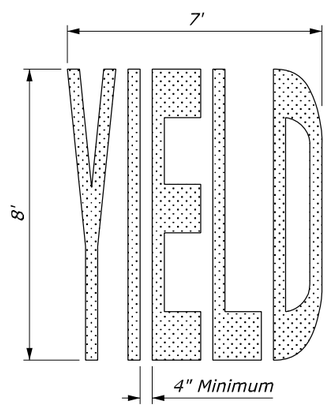

"YIELD" WORD MARKING

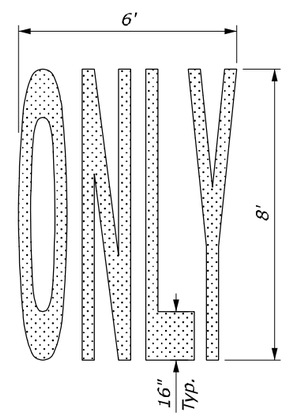

"ONLY" WORD MARKING

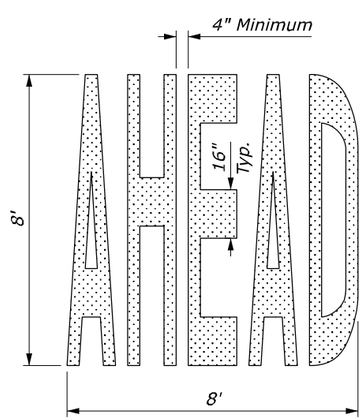

"AHEAD" WORD MARKING

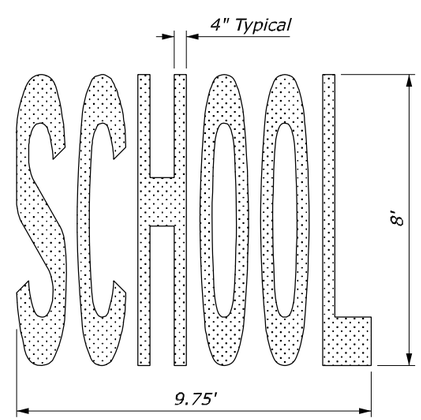

"SCHOOL" WORD MARKING

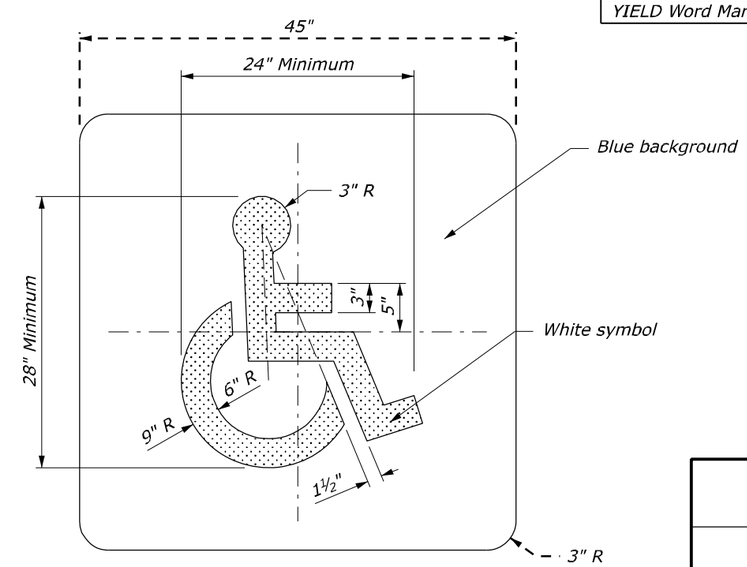

ACCESSIBILITY PARKING SPACE MARKING

NO SCALE

U.S. DEPARTMENT OF TRANSPORTATION
FEDERAL HIGHWAY ADMINISTRATION
EASTERN FEDERAL LANDS HIGHWAY DIVISION
STERLING, VIRGINIA

U.S. CUSTOMARY DETAIL

PAVEMENT MARKINGS SYMBOLS AND WORDS

DETAIL APPROVED FOR USE 3/2003
REVISED: 06/2007

DETAIL E634-A

8/31/2007 10:39:44 AM M:\Projects\natr\3d30el2\proj_dev\CADD\Std-Det\sf6340l_detail.dgn

NPS NO.	REG	STATE	PROJECT	SHEET NO.
604 42,994	SE	MS	PRA-NATR 3D30,E12	S-25

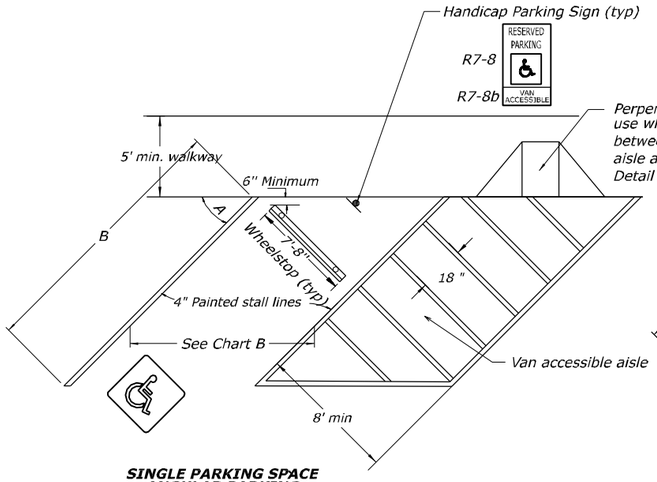

SINGLE PARKING SPACE ANGULAR PARKING WITH VAN ACCESSIBLE AISLE FOR HANDICAP ACCESS

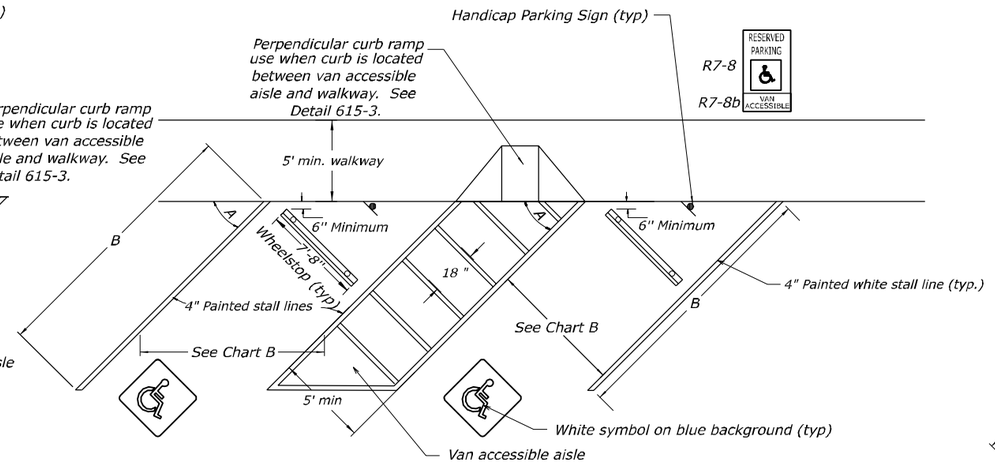

DOUBLE PARKING SPACE ANGULAR PARKING WITH VAN ACCESSIBLE AISLE FOR HANDICAP ACCESS

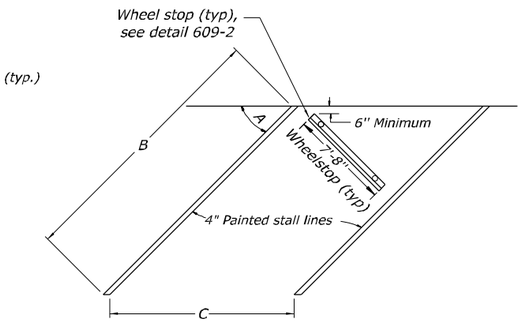

ANGULAR PARKING

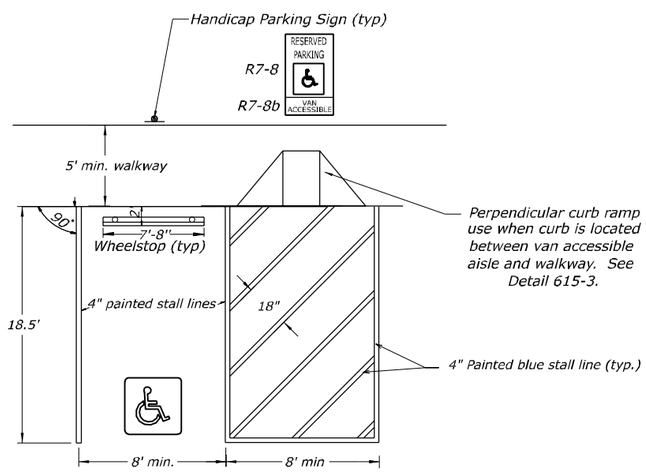

SINGLE PARKING SPACE HEAD-ON PARKING WITH VAN ACCESSIBLE AISLE FOR HANDICAP ACCESS

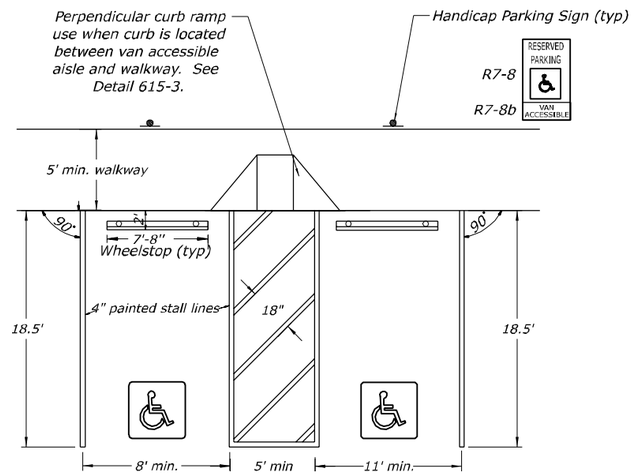

DOUBLE PARKING SPACE HEAD-ON PARKING WITH VAN ACCESSIBLE AISLE FOR HANDICAP ACCESS

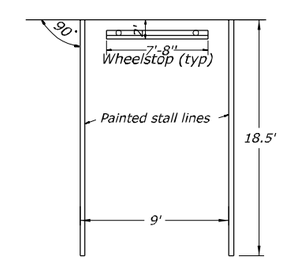

HEAD-ON PARKING

CHART A

*Required Accessible Spaces in Parking Areas**

Total Parking Spaces in Parking Area	Required Minimum Number of Accessible Spaces
1 to 25	1
26 to 50	2
51 to 75	3
76 to 100	4
101 to 150	5
151 to 200	6
201 to 300	7
301 to 400	8
401 to 500	9
501 to 1,000	2 percent of total
over 1,000	20 plus 1 for each 100

* Chart based on "Americans with Disibilities Act" Design Guide.

CHART B

*Parking Layout Dimensions for 9-ft. wide stalls**

Angle A	45°	60°	75°	90°
Minimum Length of stall B	25'	22'	20'	18.5'
Stall width, C, parallel to aisle	12.7'	10.4'	9.3'	9.0'

* Chart based on dimensions recommended in "Parking Principles".

NO SCALE

U.S. DEPARTMENT OF TRANSPORTATION
FEDERAL HIGHWAY ADMINISTRATION
EASTERN FEDERAL LANDS HIGHWAY DIVISION
STERLING, VIRGINIA

U.S. CUSTOMARY DETAIL

PAVEMENT MARKINGS IN PARKING AREAS

DETAIL APPROVED FOR USE

REVISED:

DETAIL E634-B

8/31/2007 10:40:37 AM M:\Projects\natr\3d30el2\proj_dev\CADD\Std-Det\s63405_detail.dgn

NPS NO.	REG	STATE	PROJECT	SHEET NO.
604 / 42,994	SE	MS	PRA-NATR 3D30, E12	S-26

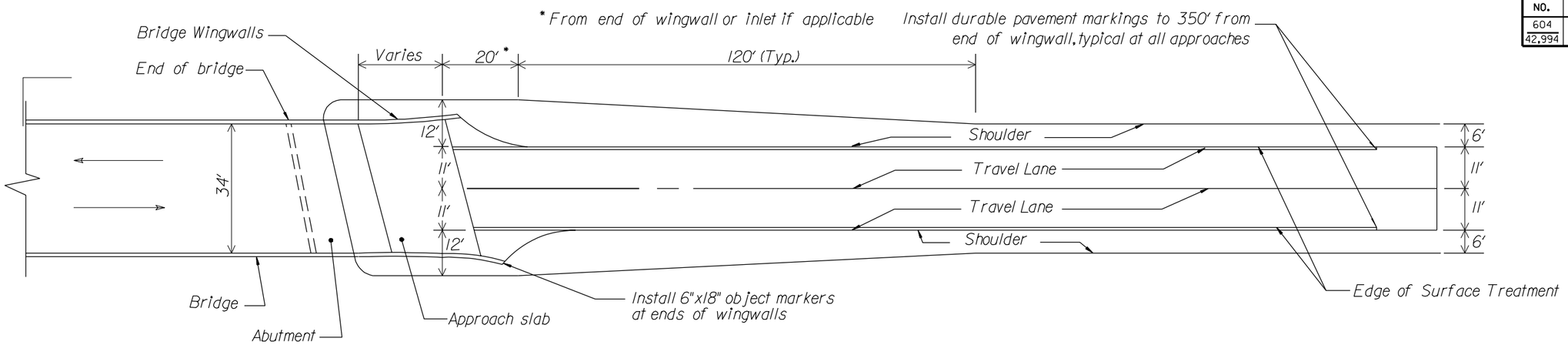

APPLICATION AT PARKWAY BRIDGES

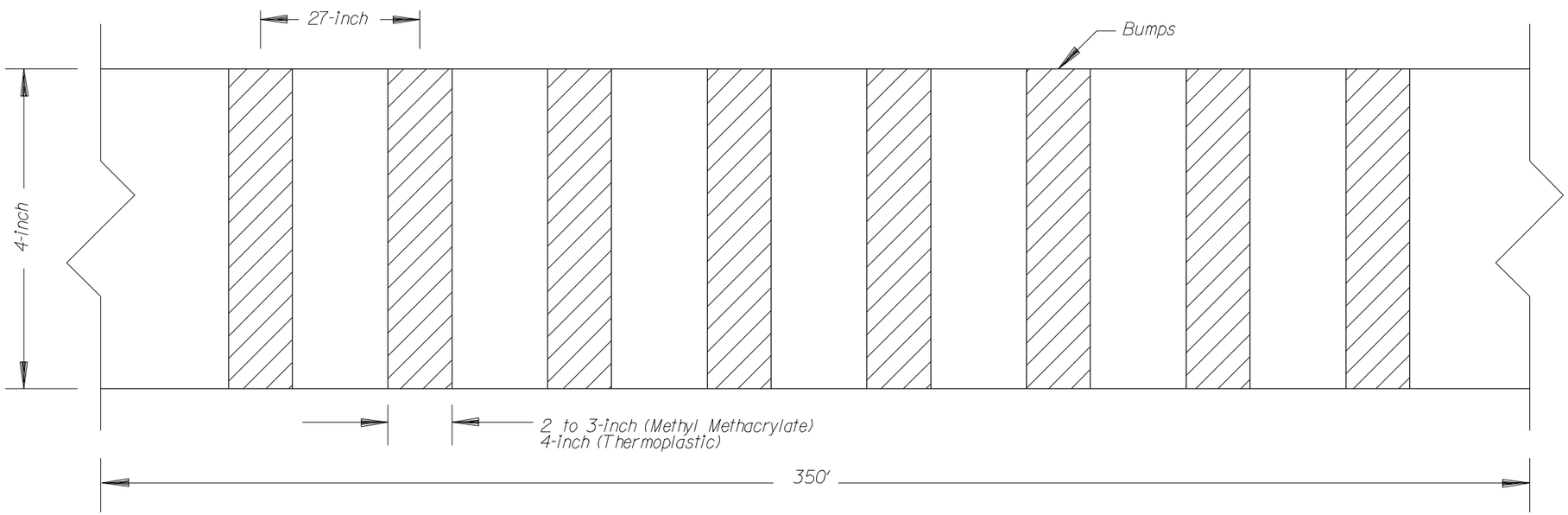

TOP VIEW

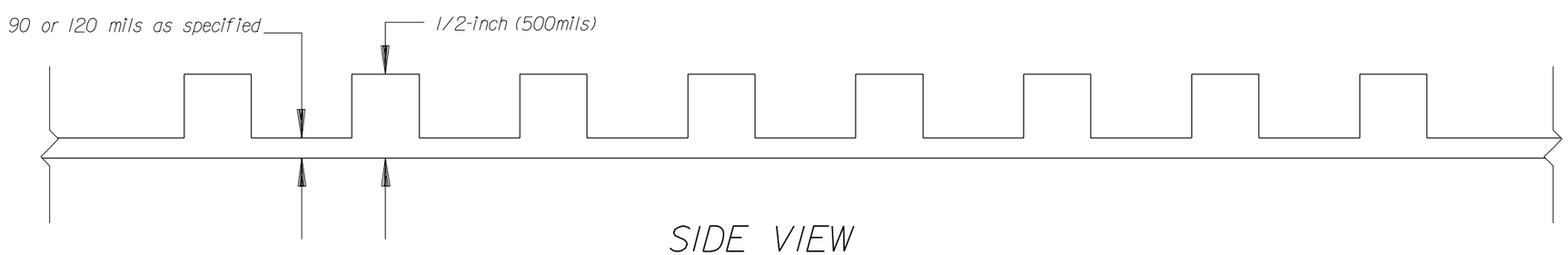

SIDE VIEW

DURABLE PAVEMENT MARKINGS (PROFILED)

NOT TO SCALE

U.S. DEPARTMENT OF TRANSPORTATION
FEDERAL HIGHWAY ADMINISTRATION
EASTERN FEDERAL LANDS HIGHWAY DIVISION

DETAIL

PAVEMENT MARKINGS
BRIDGE APPROACHES

DETAIL
E634-C

8/31/2007 0:41:26 AM M:\Projects\natr\3d30\e12\proj_dev\CADD\Std-Det\bridgepavemark.dgn

NPS NO.	REG	STATE	PROJECT	SHEET NO.
604 42,994	SE	MS	PRA-NATR 3D30,E12	S-27

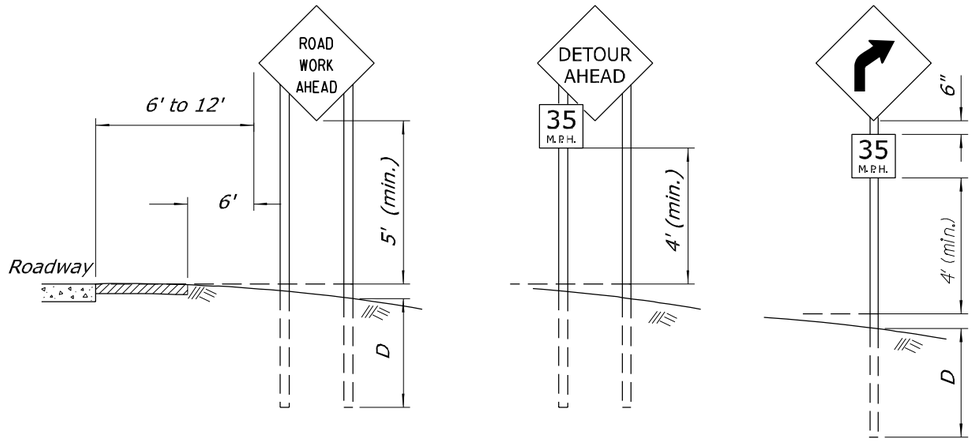

RURAL AREA

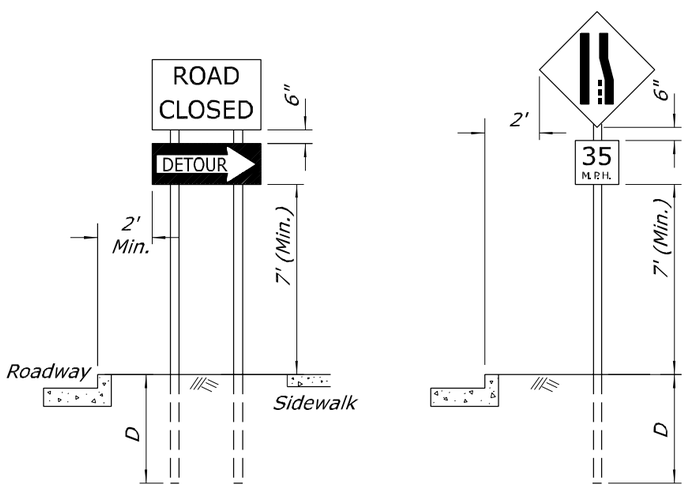

URBAN AREA

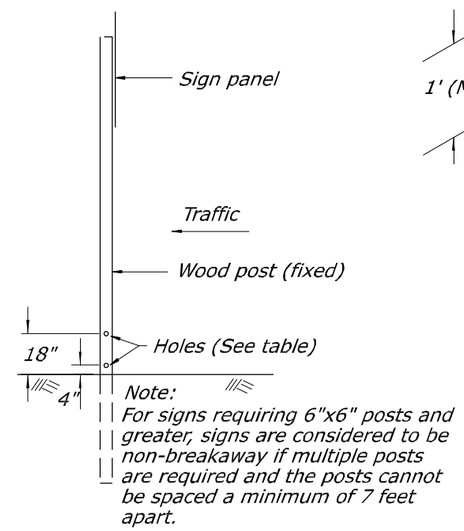

BREAKAWAY SUPPORT DETAIL
(FIXED SIGNS - 4" x 6" AND GREATER POSTS)

FIXED ROADWAY SIGNS

Post size	D	Hole Dia.	Maximum Sign Area - Sq. ft.			
			1 Post	2 Posts	3 Posts	4 Posts
4" x 4"	4'	None Req'd	10	20	X	X
4" x 6"	4'	1.5"	X	35	50	70
6" x 6"	5'	2"	X	50	75	100
6" x 8"	5'	3"	X	85	125	165

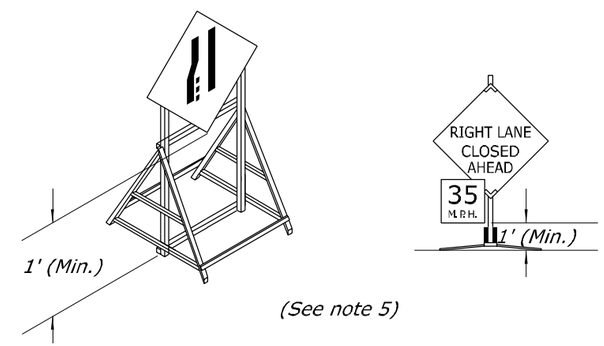

PORTABLE SIGNS
(See note 4)

Notes:

1. Wood posts are 4"x 4" unless otherwise indicated.
2. Mount signs that are wider than 3-feet or larger than 10 square feet on double posts.
3. All lumber dimensions are nominal.
4. The Contractor may submit alternate details for portable signs, however, sign mounts hold the sign face in a vertical plane. Portable signs may be mounted lower than fixed signs when approved by the CO. Ensure all portable sign supports meet the requirements of NCHRP-350 for crashworthiness.
5. When parking is permitted within 200 feet of the sign, mount the sign a minimum of 7 feet above the pavement surface.
6. When approved by the CO and the Utility Company, utility poles may be used for sign mounting.
7. For posts greater than 4" x 4" see the Breakaway Support Detail. If breakaway design cannot be used, due to post spacing, the sign should be placed outside the clearzone or be shielded by barrier. Do not place holes in posts of non-breakaway signs

NO SCALE

U.S. DEPARTMENT OF TRANSPORTATION
FEDERAL HIGHWAY ADMINISTRATION
EASTERN FEDERAL LANDS HIGHWAY DIVISION

U.S. CUSTOMARY DETAIL

CONSTRUCTION TRAFFIC CONTROL SIGN MOUNTING

DETAIL APPROVED FOR USE 02/2007
REVISED: 02/07 06/07

DETAIL
E635-01

8/31/2007 10:42:03 AM M:\Projects\natr\3d30ale\2\pro_dev\CADD\Std-Dev\e6350_detail.dgn

NPS NO.	REG	STATE	PROJECT	SHEET NO.
604 42.994	SE	MS	PRA-NATR 3D30,E12	S-28

LENGTH AND SPACING TABLE				
APPROACH SPEED*	LENGTH OF BUFFER SPACE	CHANNELIZING DEVICE		
		TAPER AREA	BUFFER SPACE	WORK SPACE
MPH	FEET	SPACING IN FEET		
25	155	20	50	50
30	200	20	60	60
35	250	20	70	70
40	305	20	80	80
45	360	20	90	90
50	425	20	100	100
55	495	20	110	110

* Approach speed based on the regulatory posted speed, not the advisory speed.

SIGN SPACING TABLE			
ROAD TYPE	DISTANCE BETWEEN SIGNS IN FEET		
	A	B	C
Urban 40 MPH and less	100	100	100
Urban 45 MPH and greater	350	350	350
Rural	500	500	500
Expressway/Freeway	1000	1500	2640

NOTE:

1. Signs are shown for one direction of travel only. Place devices similar to those depicted for the opposite direction of travel.
2. Final location and spacing of signs and devices may be changed to fit field conditions as approved by the CO.
3. For pilot car operation, mount the PILOT CAR FOLLOW ME (G20-4) sign at a conspicuous location on the rear of vehicle. Prominently display the name of the contractor on the pilot car.
4. If closure is completely within the project limits, eliminate the "ROAD WORK AHEAD" (W20-1) and "END ROAD WORK" (G20-2) signs.
5. For night time flagging operation, provide floodlighting at flagger stations.
6. Refer to Special Contract Requirements, Section 156, for project specific minimum width.
7. Do not allow equipment, materials, or vehicles to be parked or stored in the buffer space.
8. If signs will be in place more than 72 consecutive hours, use ground-mounted post.

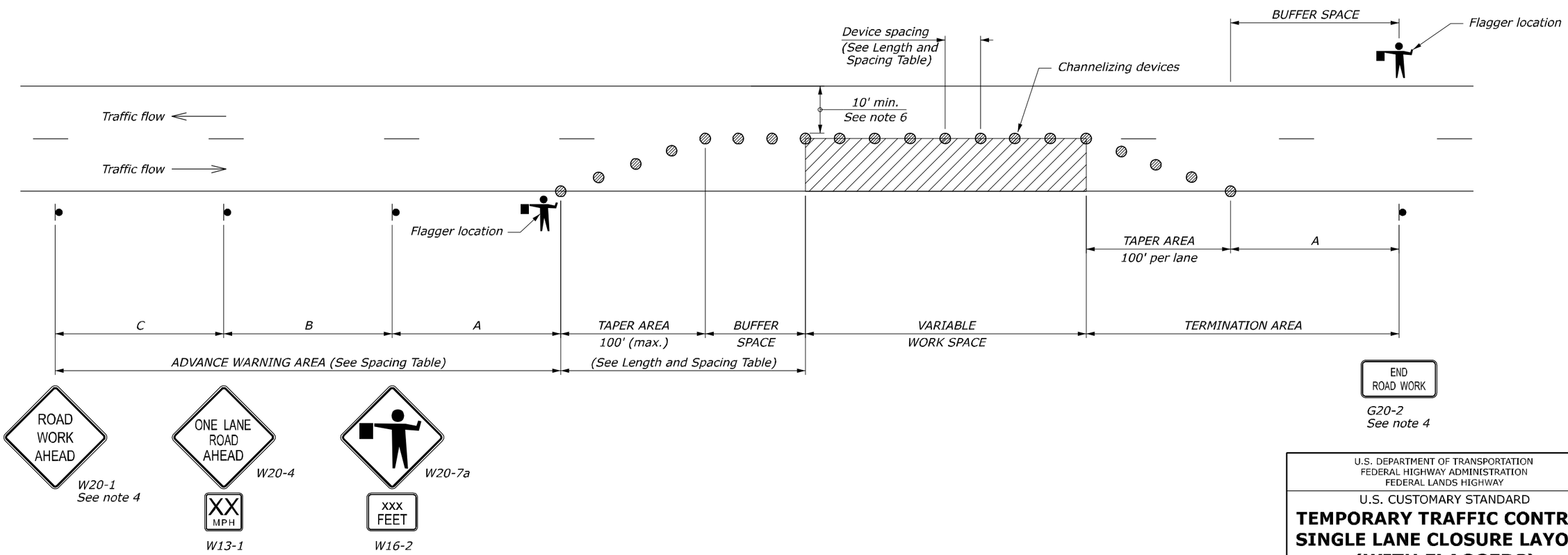

NO SCALE

U.S. DEPARTMENT OF TRANSPORTATION
FEDERAL HIGHWAY ADMINISTRATION
FEDERAL LANDS HIGHWAY

U.S. CUSTOMARY STANDARD

TEMPORARY TRAFFIC CONTROL SINGLE LANE CLOSURE LAYOUT (WITH FLAGGERS)

STANDARD APPROVED FOR USE 6/2005

REVISED:

STANDARD 635-6

8/31/2007 10:42:37 AM:\Projects\natr\3d30,e12\proj_dev\CADD\Std-Det\st63506.dgn

NPS NO.	REG	STATE	PROJECT	SHEET NO.
604 / 42,994	SE	MS	PRA-NATR 3D30,E12	S-29

LENGTH AND SPACING TABLE

APPROACH SPEED*	MINIMUM TAPER LENGTH**	LENGTH OF BUFFER SPACE	CHANNELIZING DEVICE		
			TAPER AREA	BUFFER SPACE	WORK SPACE
MPH	FEET	FEET	SPACING IN FEET		
25	Shoulder taper formula:	155	25	50	50
30	$L = \frac{WS^2}{180}$ for $S \leq 40$ MPH	200	30	60	60
35	$L = \frac{WS}{3}$ for $S \geq 45$ MPH	250	35	70	70
40	Where:	305	40	80	80
45	L = Minimum length of taper	360	45	90	90
50	W = Width of offset in feet S = Numerical value of posted speed limit or 85 percentile speed prior to work in miles per hour	425	50	100	100
55		495	55	110	110

* Approach speed based on the regulatory posted speed, not the advisory speed.

** Lengthen taper as needed to provide minimum of three channelizing devices in taper at required spacing.

SIGN SPACING TABLE

ROAD TYPE	DISTANCE BETWEEN SIGNS IN FEET		
	A	B	C
Urban 40 MPH and less	100	100	100
Urban 45 MPH and greater	350	350	350
Rural	500	500	500
Expressway/Freeway	1000	1500	2640

NOTE:

1. Final location and spacing of signs and devices may be changed to fit field conditions as approved by the CO.
2. Refer to Special Contract Requirements, Section 156, for minimum width.
3. If shoulder closure is completely within the project limits, eliminate the "ROAD WORK AHEAD" (W20-1) and "END ROAD WORK" (G20-2) signs.
4. Remove or cover Workers symbol sign (W21-1a) when workers are not present.
5. Do not allow equipment, materials, or vehicles to be parked or stored in the buffer space.
6. If signs will be in place more than 72 consecutive hours, use ground-mounted post.

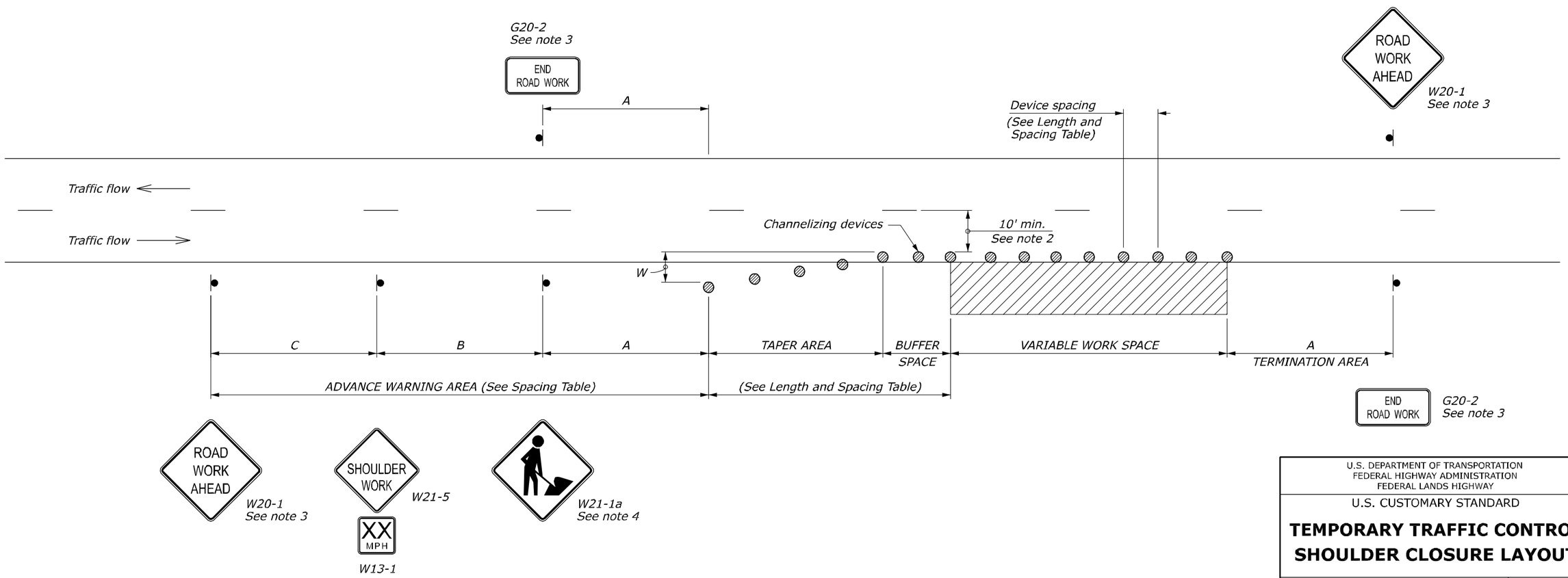

NO SCALE

U.S. DEPARTMENT OF TRANSPORTATION
FEDERAL HIGHWAY ADMINISTRATION
FEDERAL LANDS HIGHWAY

U.S. CUSTOMARY STANDARD

TEMPORARY TRAFFIC CONTROL SHOULDER CLOSURE LAYOUT

STANDARD APPROVED FOR USE 6/2005

REVISED:

STANDARD 635-10

8/31/2007 10:43:05 AM:\Projects\natr\3d30,e12\proj_dev\CADD\Std-Det\st63510.dgn

REG	STATE	PROJECT	SHEET NO.
SE	MS	PRA-NATR 3D30,E12	T1

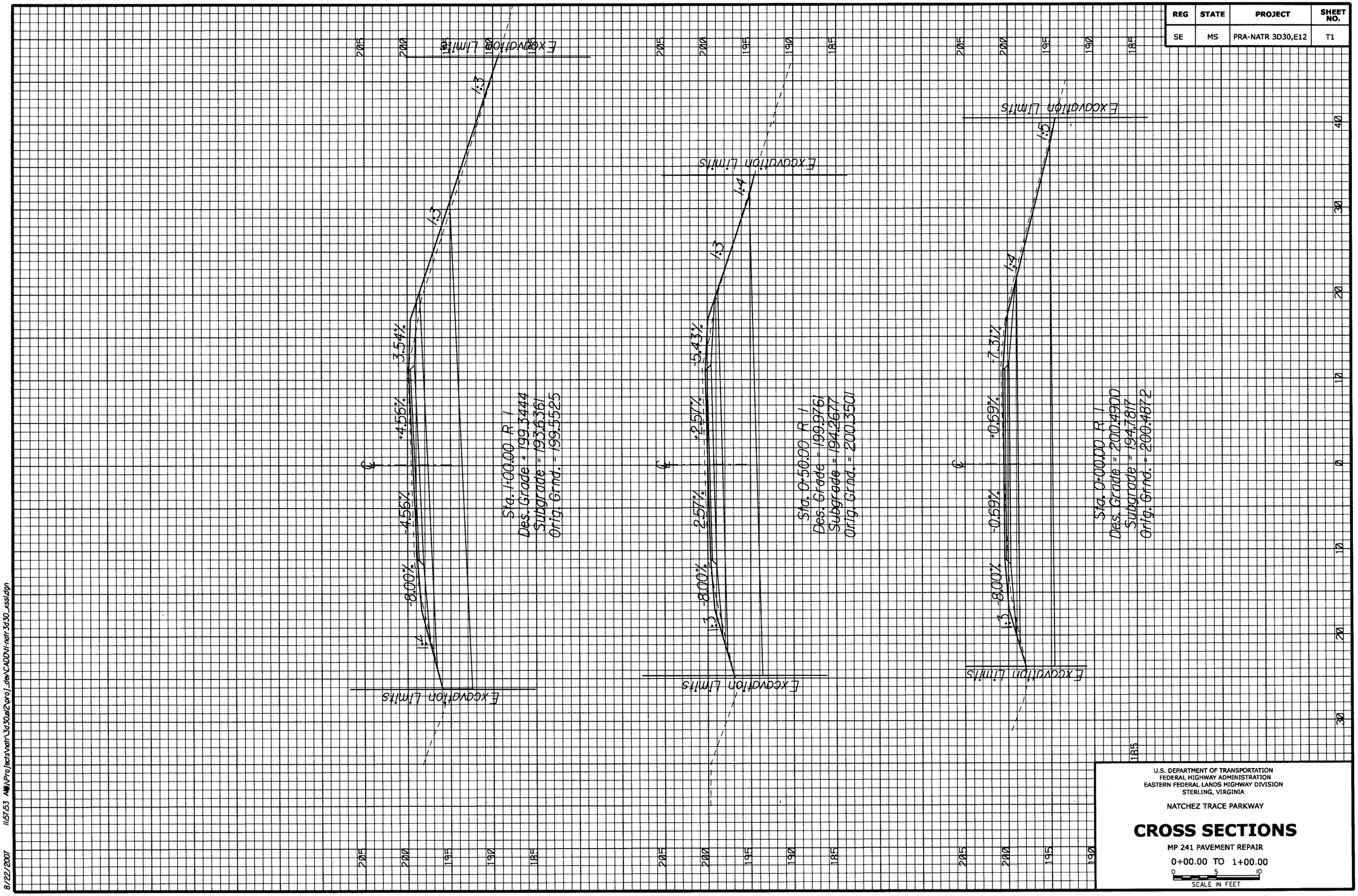

U.S. DEPARTMENT OF TRANSPORTATION
FEDERAL HIGHWAY ADMINISTRATION
EASTERN FEDERAL LANDS HIGHWAY DIVISION
STERLING, VIRGINIA

NATCHEZ TRACE PARKWAY

CROSS SECTIONS

MP 241 PAVEMENT REPAIR

0+00.00 TO 1+00.00

0 5 10
SCALE IN FEET

8/22/2007 11:51:53 AM\Projects\natr\3d30\e12\proj_dev\CADD\i-natr3d30_xssl.dgn

REG	STATE	PROJECT	SHEET NO.
SE	MS	PRA-NATR 3D30,E12	T2

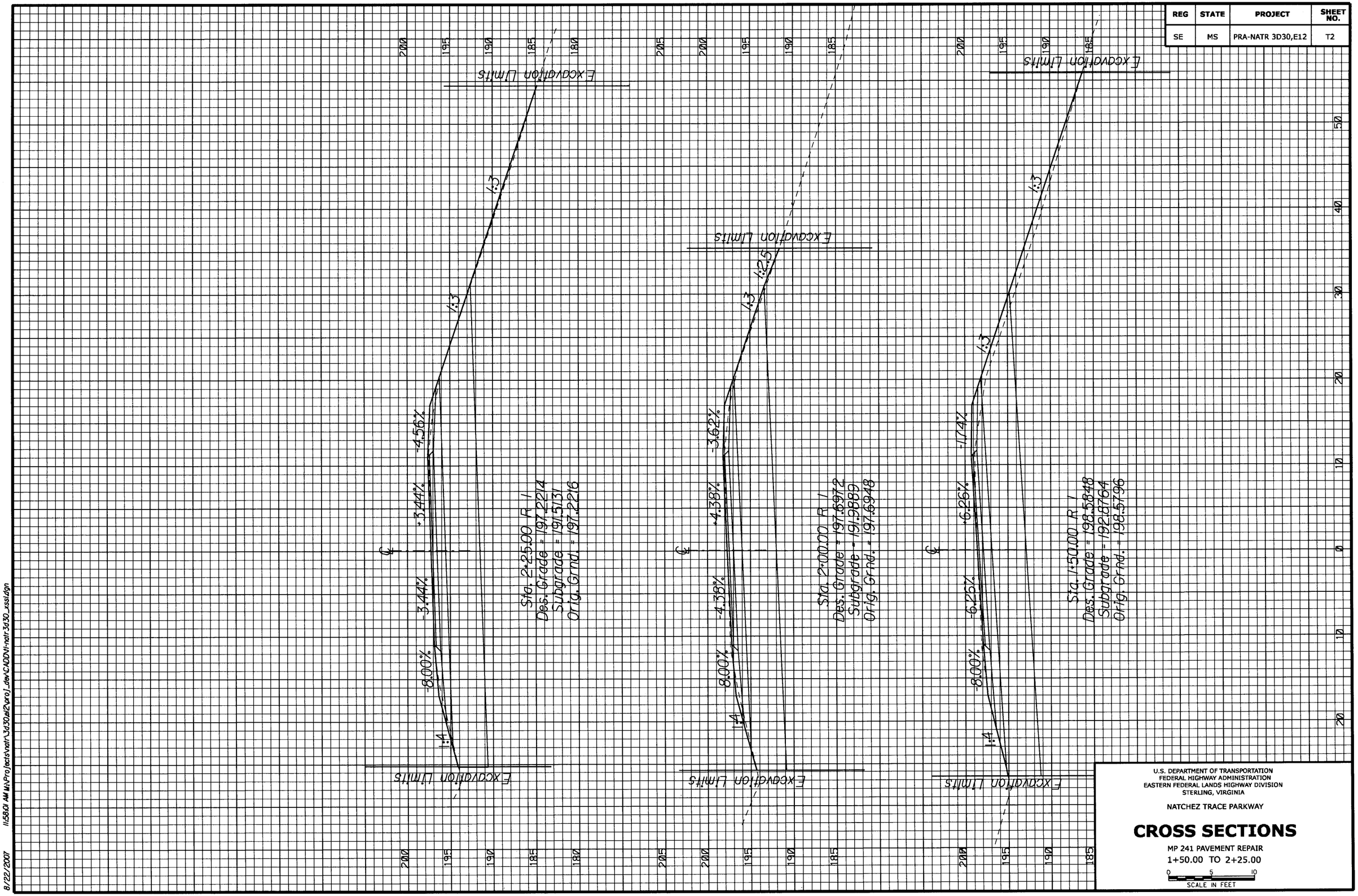

U.S. DEPARTMENT OF TRANSPORTATION
FEDERAL HIGHWAY ADMINISTRATION
EASTERN FEDERAL LANDS HIGHWAY DIVISION
STERLING, VIRGINIA

NATCHEZ TRACE PARKWAY

CROSS SECTIONS

MP 241 PAVEMENT REPAIR
1+50.00 TO 2+25.00

0 5 10
SCALE IN FEET

8/22/2007 11:58:01 AM M:\Projects\natr\3d30ad2\proj_dev\CADD\t-natr3d30_xss1.dgn

REG	STATE	PROJECT	SHEET NO.
SE	MS	PRA-NATR 3D30,E12	X1

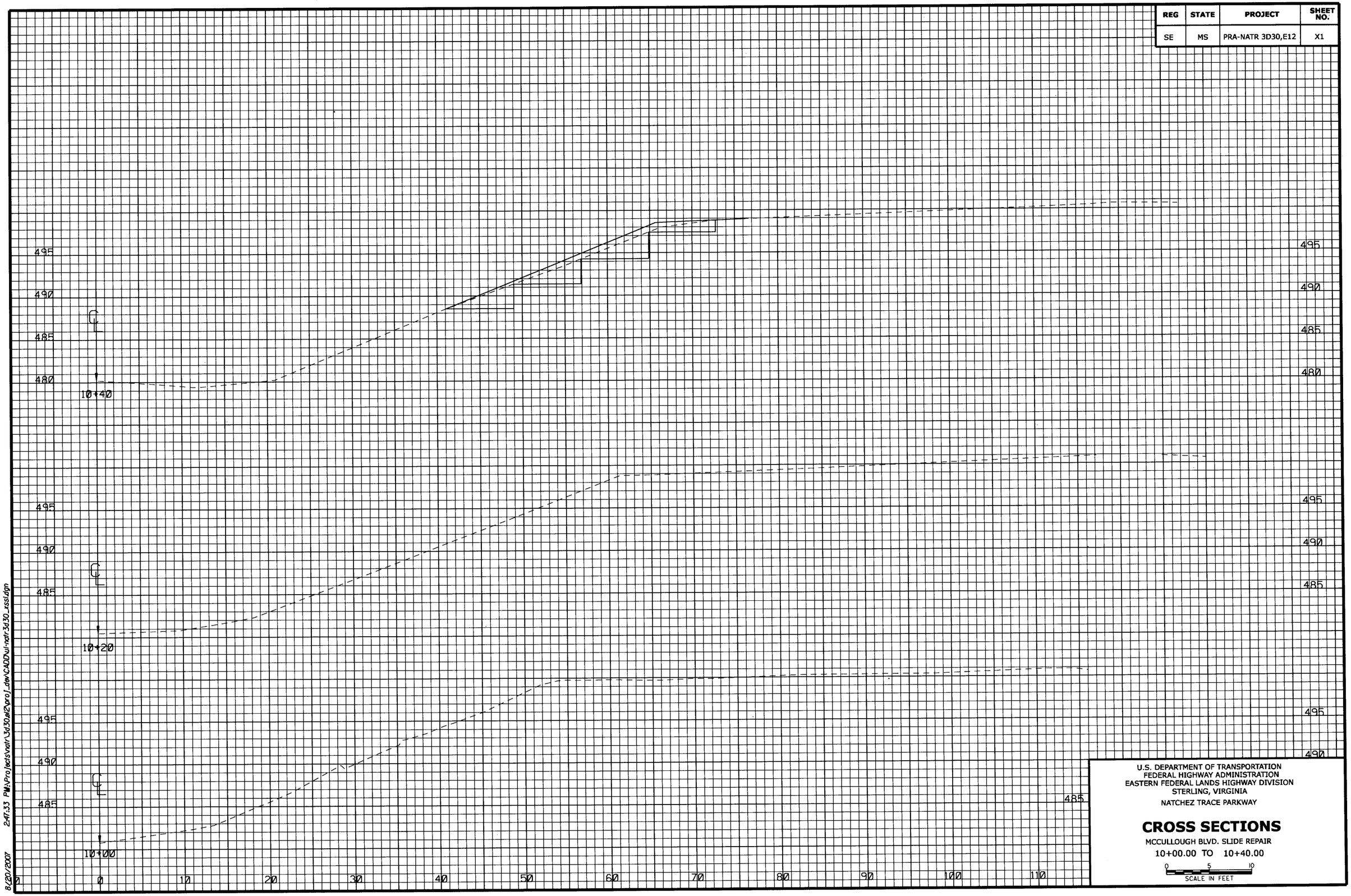

U.S. DEPARTMENT OF TRANSPORTATION
FEDERAL HIGHWAY ADMINISTRATION
EASTERN FEDERAL LANDS HIGHWAY DIVISION
STERLING, VIRGINIA

NATCHEZ TRACE PARKWAY

CROSS SECTIONS

MCCULLOUGH BLVD. SLIDE REPAIR

10+00.00 TO 10+40.00

0 5 10
SCALE IN FEET

8/20/2007 2:47:33 PM:\Projects\natr\3d30\el2\proj_dev\CADD\ul-natr-3d30_xss.dgn

REG	STATE	PROJECT	SHEET NO.
SE	MS	PRA-NATR 3D30,E12	X2

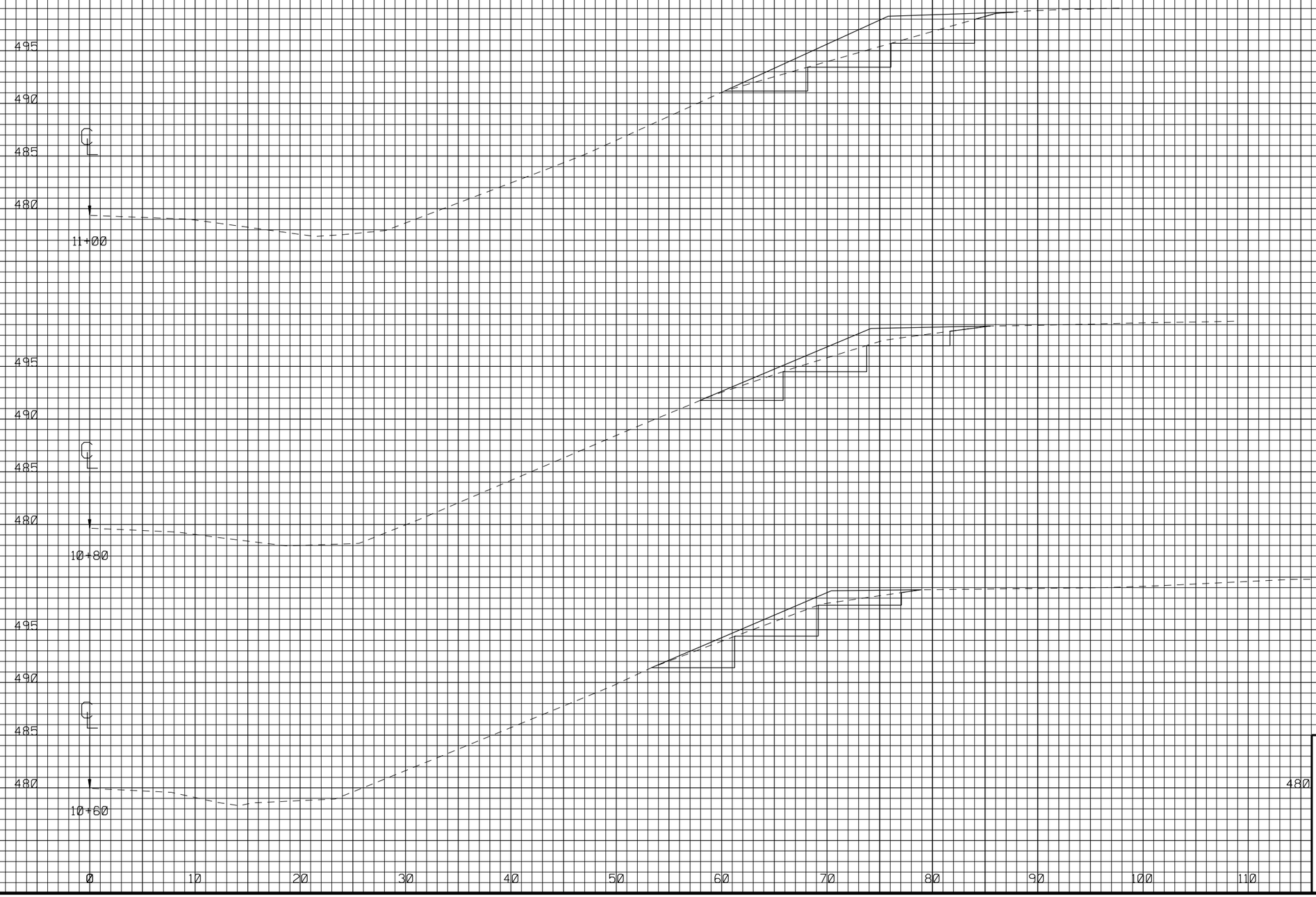

U.S. DEPARTMENT OF TRANSPORTATION
FEDERAL HIGHWAY ADMINISTRATION
EASTERN FEDERAL LANDS HIGHWAY DIVISION
STERLING, VIRGINIA

NATCHEZ TRACE PARKWAY

CROSS SECTIONS

MCCULLOUGH BLVD. SLIDE REPAIR

10+60.00 TO 11+00.00

0 5 10
SCALE IN FEET

8/27/2007 11:42:50 AM J:\Projects\natr\3d30e12\proj_dev\CADD\ul-natr-3d30_xssl.dgn