DRAWN BY:		DATE:	
CHECKED BY:		DATE:	S&B PROJECT NO:
APPROVED BY:		DATE:	U0450.517
STATE	COUNTY		SHEET NO.
TEXAS	CAMERON		01.01

UNITED STATES SECTION INTERNATIONAL BOUNDARY AND WATER COMMISSION

ADDENDUM NO. 2

LOWER RIO GRANDE FLOOD CONTROL PROJECT

REHABILITATION OF ARROYO COLORADO NORTH LEVEE

WILLACY CANAL TO WHITE RANCH ROAD

REHABILITATION OF ARROYO COLORADO NORTH LEVEE

INDEX OF SHEETS

SHEET No.	DESCRIPTION
	GENERAL
01.01	TITLE SHEET
02.01	PROJECT LAYOUT
02.02-02.05	SURVEY CONTROL SHEETS LEVEE ACN2
03.01	GENERAL NOTES & SPECIFICATION DATA
04.01	ESTIMATE OF QUANTITIES
05.01	SUMMARY OF LEVEE
05.02-05.03	SUMMARY OF STRUCTURES
	TYPICAL SECTIONS
06.01	EXISTING TYPICAL SECTIONS
06.02	PROPOSED TYPICAL SECTIONS
	LEVEE DETAILS
07.01-07.03	ALIGNMENT DATA SHEET
08.01-08.17	PLAN & PROFILE - LEVEE
08.18	PLAN & PROFILE - INTERSECTING ACCESS ROADS
09.01-09.05	BORE LOGS
10.01-10.44	CROSS - SECTIONS
11.00	OMITTED
	STRUCTURES
12.01-12.14	CULVERT LAYOUT / CROSS - SECTIONS
12.15-12.16	SAFETY END TREATMENT (TY II)
	EROSION CONTROL
13.01	SW3P
	ENVIRONMENTAL COMMITMENTS / MITIGATION
14.01	EPIC
	STANDARDS
15.01	HEAVY DUTY VEHICULAR GATE
15.02	TRAFFIC CONTROL DETAILS TYPE III BARRICADES AND LANE CLOSURES
15.03-15.05	TEMPORARY EROSION SEDIMENT AND WATER POLUTION MEASURES
15.06-15.17	BC-07

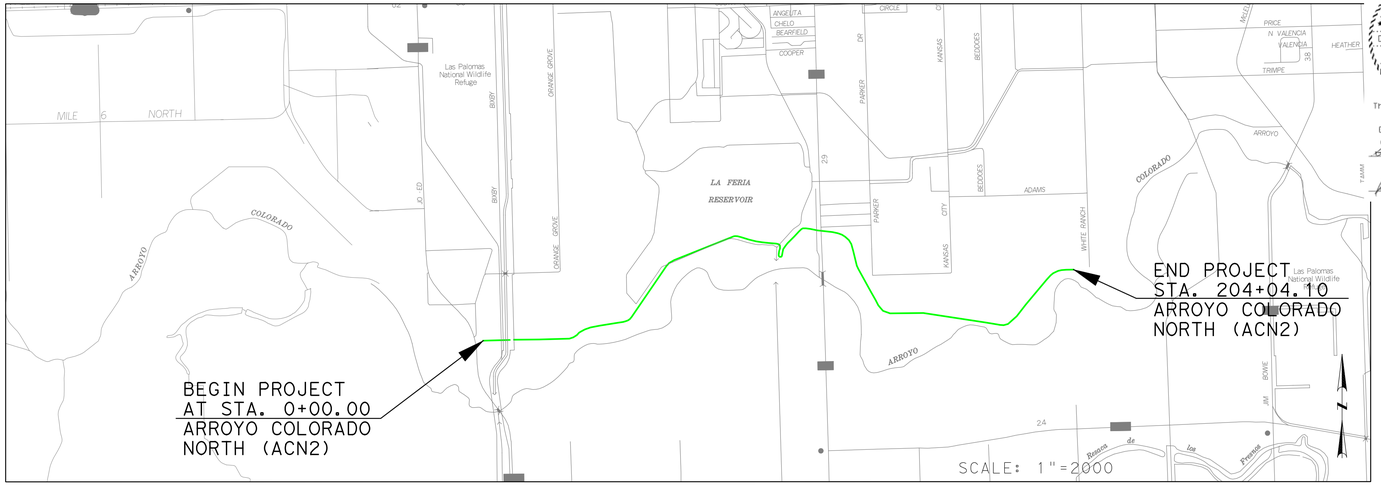

VICINITY MAP

STATE OF TEXAS
DARIO V. GUERRA III
64669
REGISTERED PROFESSIONAL ENGINEER

The seal appearing on this document was authorized by DARIO V. GUERRA III P.E. 64669, on September 30 2009

PLANS PREPARED BY

S&B INFRASTRUCTURE, LTD.
Engineering Management Technology

S&B Infrastructure, Ltd. Firm Registration Number: 1582

DANIEL O. RIOS, P.E., PROJECT MANAGER

SUBMITTED FOR LETTING:

SHARLOTTE LYNNE TEAGUE, P.E.
DEPUTY PROJECT MANAGER / TASK ORDER MANAGER

DATE : 08/16/2009

FINAL PLAN DATA:

FINAL CONTRACT PRICE: _____
CONTRACTOR'S NAME: _____
CONTRACTOR ADDRESS: _____
LETTING DATE: _____
DATE WORK BEGAN: _____
DATE WORK COMPLETED: _____
DATE OF ACCEPTANCE: _____

CHANGE ORDERS:

U.S. SECTION INTERNATIONAL BOUNDARY & WATER COMMISSION

RECOMMENDED FOR LETTING : _____ DATE : _____
RAYMUNDO AGUIRRE, Ph.D, P.E.
PROJECT MANAGER

APPROVED FOR LETTING : _____ DATE : _____
JOSE ARTURO NUNEZ, P.E.
DIVISION ENGINEER, ENGINEERING SERVICES DIVISION

APPROVED FOR LETTING : _____ DATE : _____
C. W. RUTH, P.E.
COMMISSIONER

ITEM 01 57. TEMPORARY EROSION, SEDIMENTATION AND ENVIRONMENTAL CONTROLS

Temporary sediment controls are identified at various locations, and may be adjusted in the field as directed or compliance-confirmed by the COR.

ITEM 31 11. PREPARING RIGHT OF WAY

The COR shall designate features that are for preservation.

Various signs are located throughout the project limits. The Contractor shall remove, temporarily store and relocate each sign (shown/not shown within the plans) as directed by the COR. This work is considered subsidiary to Item 31 11 01 Prep Right of Way.

ITEM 31 14. REMOVE / STOCKPILE EXISTING MATERIALS

The contractor shall only place stockpiles in staging areas, unless otherwise approved by the COR.

ITEM 31 92. SEEDING FOR EROSION CONTROL

During drill seeding operations, application methods shall be in accordance with the standard specification requirements.

SS-1 Tracking Agent shall be a ratio of 2:1, two (Emulsion) to one (water) and applied at a rate of 0.05 gallons per square yard. The SS-1 Tracking Agent required for Drill Seed operations, will not be paid for directly, but will be subsidiary to this Item. Watering shall not be used with the Drill Seed Method.

Cool Season or Warm Season Grasses shall be included as part of Item 31 92.

Watering rates for seeding 0.25 gal/sy per cycle with 2 cycles per week for the first 3 weeks then 0.25 gal/sy per cycle with 1 cycle per week for the next 2 weeks.

The watering rates are to estimate the amount of watering that might be needed to supplement natural rainfall to keep the soil moist until germination and establishment of seeds and grasses can occur. The Contractor will adjust these rates as directed or compliance-confirmed by the COR to take into account actual field conditions such as rain, soil temperature, soil texture, air temperature, sunny vs. cloudy days, etc. increasing the gals per cycle to decrease the number of cycles per week will not be allowed.

Water shall be applied uniformly over areas after seeding or sodding as shown on plans or directed by the COR. In addition, the Contractor shall be responsible for 70% grass coverage in order to comply with stabilization requirements. Vegetative coverage shall be uniform during this period; water equipment shall be metered and operated under pumping pressure cable of delivering the required quantities of water necessary. Water shall be applied in such a manner as to ensure adequate moisture and be maintained on the grass seeding and soil in place.

Upon establishment of 70% vegatative coverage, as determined by the COR, the COR shall have the option to require the Contractor to continue watering as specified for a period not to exceed 30 days. However, rate and frequency may be adjusted, with compliance-confirmation by the COR, to meet site conditions.

Seed mixture shall be as specified under Item 31 92.

ITEM 35 41. CONSTRUCTION OF LEVEE

The levee and all areas to support fill material shall be stripped of all vegetation and/or organic soil under Item 31 14. The existing caliche shall also be removed.

Upon completion of stripping operations, the exposed subgrades shall be thoroughly proof-rolled in order to locate and densify any weak, compressible zones.

Upon completion of the proof rolling operations and just prior to fill placement, the exposed subgrades shall be moisture conditioned by scarifying to a minimum depth of 6 inches and recompacted to a minimum of 95 percent of the maximum dry density as determined by ASTM D698 "Compaction Test".

The moisture content of the subgrade shall be maintained within the range of optimum moisture content to 3 percentage points above the optimum moisture content until permanently covered.

Borrow material shall be free of roots, vegetation, and other organic or degradable materials.

It is the contractor's responsibility to advise the COR of the location of the borrow source sufficiently in advance to avoid delay.

Finish grading by the Contractor will be required for drainage (as shown), and will be considered subsidiary to Item 35 41.

ITEM 50 20. ROADWAY BASE (FLEXIBLE BASE)

Flexible base materials shall be composed of caliche (argillaceous limestone, calcareous or calcareous clay particles) with or without stone conglomerate gravel, sand, or granular materials, meetings, the specifications of Type E Grade 4 as shown below.

The Contractor may blend base material with another caliche source or with crushed concrete, meeting the requirements for TY "D" materials, provided a minimum of 50 percent caliche is used. The crushed concrete may contain sand or granular materials. Stabilizing additives will not be allowed in the raw crushed concrete base. Acceptance will be under the following conditions:

Condition One: When both components of the blend in their individual stockpiles meet all the physical requirements of this item, then field blending will be allowed.

Condition Two: When only one component of the blend passes the physical requirements of this item, the materials shall be blended through a plant for stockpile testing and approval.

Flexible Base TY E Grade 4 shall conform to the following requirements:

Retained on Sq. Sieve	Percent Retained
2"	0
1/2"	20-60
No. 4	40-75
No. 40	75-85
Max. PI:	15
Max. Wet Ball PI:	15
Wet Ball Mill Max Amount:	50
Min. Comp. Strength PSI:	150 at 15 PSI lateral pressure

Liquid limit shall be determined by TEX-104-E.

The Wet Ball Test (Tex-116-E) shall be performed and the Plasticity Index of the materials passing the No. 40 sieve shall be determined (Wet Ball PI).

The percent of density as determined by Compaction Ratio (Tex-113-E) for the new Flexible Base shall be a minimum of 95 percent.

The Contractor's attention is called to the fact that certain existing and/or proposed structures may be within the limits of the Flexible Base. It shall be the Contractor's responsibility to perform construction operations without damage to these structures.

For water added under Item 50 20, the sulfate content shall not exceed 3000-ppm and the chloride content shall not exceed 3000-ppm.

ITEM 50 25. HOT MIX ASPHALT CONCRETE PAVEMENT

The Contractor shall exercise diligence in the application of "Tack Coat" to keep from spraying or splattering the traveling public with asphaltic material.

Blading (not to exceed more than 3-ft from the pavement edge) may also be necessary to clean dirt and grass from pavement edges and turnout areas as work under this bid Item. The cost of this blading will not be paid for directly, but shall be considered subsidiary to this bid Item.

This project will require the following minimum aggregate Classification: A.

Lime shall be used as an anti-stripping agent.

All longitudinal joints adjacent to a travel way shall be constructed with a joint maker providing a maximum 1/2-inch vertical edge and a minimum 6:1 edge taper or as compliance-confirmed by the COR.

The Hamburg Wheel Test requirement for PG 64 binder will be 5,000 passes @ 0.5 inch rut depth.

ITEM 50 29. CONCRETE CURB & GUTTER

Before final acceptance of the project, remove discoloration caused by tire marks, mud, asphalt, paint or other similar material by any method satisfactory to the COR to achieve a uniform color and texture of the finished surface exposed to view.

ITEM 60 20. CONCRETE STRUCTURES

Use membrane curing, Type 2, for concrete curb and gutter.

ITEM 60 64. REINFORCED CONCRETE PIPE

Use tongue and groove pipe where the reinforced concrete pipe (RCP) extends into the subgrade.

The 4-foot depth restriction for heavy equipment passage over pipe structures is voided.

The Contractor will be responsible for any construction damage to existing RCP.

Do not use mortar joints.

All RCP shall include rubber gaskets unless shown otherwise on the plans or directed by the COR.

ITEM 60 66. HEADWALLS AND WINGWALLS

Do not use pre-cast headwalls/wingwalls.

ITEM 60 68. SLUICE GATES

The Contractor shall field verify dimensions of any existing sluice gates and/or sluice gate parts that are identified in the plans as being available for re-use and re-installation.

ITEM 60 71. GRATES AND LADDERS

The Contractor shall field verify the required proposed length of ladder.

S&B INFRASTRUCTURE, LTD.
Engineering Management Technology
S&B Infrastructure, Ltd. Firm Registration Number: 1582

ADDENDUM NO. 2

ARROYO COLORADO NORTH LEVEE
(ACN2)
GENERAL NOTES

SHEET 1 OF 1

STATE	COUNTY	DRAWN BY:	CHECKED BY:	
TEXAS	CAMERON	PROJECT NO. IBM09T0018		SHEET NO.
REHABILITATION OF ARROYO COLORADO NORTH LEVEE (WILLACY CANAL TO WHITE RANCH ROAD)				3.01

$TIME$
$DATE$
$FILE$

E S T I M A T E & Q U A N T I T I E S S U M M A R Y

ITEM BID			DESCRIPTION	UNIT	TOTAL	
DIVISION NO.	ITEM No.	DESC CODE			ESTIMATE	FINAL
DIVISION 01 - GENERAL REQUIREMENTS						
01	57	01	TEMP EROSION CONTROL (SILT FENCE)	LF	9,264	
01	70	01	MOBILIZATION	LS	1	
DIVISIONS 31-33 - GRADING						
31	11	10	PREP RIGHT OF WAY	STA	20	
31	14	02	REMOVE/STOCKPILE (EXIST TOPSOIL) (6 IN)	CY	1,098	
31	11	11	CLEARING, GRUBBING AND STRIPPING	AC	5.0	
31	15	01	LAND SMOOTHING	AC	1.3	
31	92	01	SEEDING (PERM)	SY	30,036	
31	92	02	VEGETATIVE WATERING	MG	60	
DIVISION 35 - WATERWAY/MARINE						
35	41	02	LEVEE (EMBANKMENT)	CY	4,854	
35	41	03	LEVEE (TOPSOIL)	CY	754	
35	42	02	RIPRAP (ROCK)	CY	15	
DIVISION 50 - ROADWAY CONSTRUCTION						
50	11	02	ROADWAY EMBANKMENT (ACCESS ROAD)	CY	507	
50	20	01	ROADWAY FLEX BASE (TYE GR 4)	CY	566	
DIVISION 60 - STRUCTURES						
60	67	01	S.E.T. (TYPE II) (3:1) (18 INCH)	EA	1	
60	68	37	SLUICE GATE (REFURB) (24 IN)	EA	1	
60	98	10	CLEAN EXIST STRUCTURE	EA	5	

S&B INFRASTRUCTURE, LTD.
Engineering Management Technology
S&B Infrastructure, Ltd. Firm Registration Number: 1582

ADDENDUM NO. 2

ARROYO COLORADO NORTH LEVEE
(ACN2)
ESTIMATE OF QUANTITIES
SHEET 1 OF 1

STATE	COUNTY	DRAWN BY: ENF	CHECKED BY: MH	
TEXAS	CAMERON	PROJECT NO. IBM09T0018		SHEET NO.
REHABILITATION OF ARROYO COLORADO NORTH LEVEE (WILLACY CANAL TO WHITE RANCH ROAD)				04.01

$TIME$
$DATE$
$FILE$

LOCATION STA		01 57 01	31 11 10	31 11 11	31 14 02	31 15 01	31 32 02	35 41 02	35 41 03	31 92 01	31 92 02	50 20 01	50 11 02	60 67 01	60 68 37	60 98 10
		TEMP EROSION CONTROL (SILT FENCE)	PREP ROW	CLEARING & GRUBBING	REMOVE/STKPL (EXIST TOPSOIL 6")	LAND SMOOTHING	ROCK RIP-RAP	RAISE LEVEE (EMBANKMENT)	RAISE LEVEE (TOPSOIL)	SEEDING PERM	VEGETATIVE WATERING	ROADWAY FLEXBASE TY E GR 4	ROADWAY EMBANKMENT (ACCESS ROAD)	S.E.T. (TYPE III) (3:1) (18 IN)	SLUICE GATE REFURB (24 IN)	CLEAN EXISTING STRUCTURE
FROM	TO	LF	STA	AC	CY	AC	CY	CY	CY	SY	MG	CY	CY	EA	EA	EA
0+00.00	12+00.00	428		0.31						1482	3.0					
12+00.00	24+00.00	1200	2	0.63	105	0.27		558	66.00	3458	6.9	61				
24+00.00	36+00.00	1036		0.89						4304	8.6			1		1
36+00.00	48+00.00	1009		1.09						5275	10.6					
48+00.00	60+00.00	1178		0.80						3851	7.7					
60+00.00	72+00.00	820	2	0.49	60.00	0.13		272.00	38.00	2622	5.2	30				
72+00.00	84+00.00	1071	10	0.04	696.00	0.73	15.00	3084	479	3073	6.1	326				
84+00.00	96+00.00															
96+00.00	108+00.00	66	1			0.04				209	0.4					
108+00.00	120+00.00	579	5	0.03	237	0.16		940	171	1172	2.3	149	507		1	
120+00.00	132+00.00	173		0.08						394	0.8					
132+00.00	144+00.00	827		0.41						1966	3.9					
144+00.00	156+00.00															2
156+00.00	168+00.00															2
168+00.00	180+00.00	127		0.03						156	0.3					
180+00.00	192+00.00	286		0.15						707	1.4					
192+00.00	204+04.10	464		0.28						1367	2.7					
ACN2 LEVEE TOTALS		9264	20	5	1098	1.33	15	4854	754	30036	60	566	507	1	1	5

S&B INFRASTRUCTURE, LTD.
Engineering Management Technology

S&B Infrastructure, Ltd. Firm Registration Number: 1582

ADDENDUM NO. 2

ARROYO COLORADO NORTH LEVEE
(ACN2)
SUMMARY OF LEVEE

SHEET 1 OF 1

STATE	COUNTY	DRAWN BY: ENF	CHECKED BY: MH	
TEXAS	CAMERON	PROJECT NO. IBM09T0018		SHEET NO.
REHABILITATION OF ARROYO COLORADO NORTH LEVEE (WILLACY CANAL TO WHITE RANCH ROAD)				05.01

$TIME$
$DATE$
$FILE$

LEVEE REACH	STATION NO.	STRUCTURE NO.	STRUCTURE SIZE	STRUCTURE USAGE	60 68 SLUICE GATE (REFURB) (24 INCH) EA
ACN2	-0+02.10	452	18-INCH	DRAINAGE	
ACN2	6+09.32	454L	5FT X 5FT	DRAINAGE	
ACN2	6+68.54	454	4FT X 5FT	DRAINAGE	
ACN2	11+85.94	455	2FT X 2FT	DRAINAGE	
ACN2	34+56.57	457B	18-INCH	DRAINAGE	
ACN2	48+12.82	458	24-INCH	DRAINAGE	
ACN2	114+06.90	460	24-INCH	DRAINAGE	1
ACN2	114+35.21	460L	12-INCH	DRAINAGE	
ACN2	127+94.48	461	12-INCH	DRAINAGE	
ACN2	129+85.21	462	18-INCH	DRAINAGE	
ACN2	142+47.44	462A	18-INCH	DRAINAGE	
ACN2	164+35.92	463	3FT X 3FT	DRAINAGE	
ACN2	201+97.60	464	3FT X 3FT	DRAINAGE	
ACN2 STRUCTURE TOTALS					1

S&B INFRASTRUCTURE, LTD.
Engineering Management Technology
S&B Infrastructure, Ltd. Firm Registration Number: 1582

ADDENDUM NO. 2

SUMMARY OF SMALL STRUCTURES
NORTH FLOODWAY
NORTH & SOUTH

SHEET 2 OF 3

STATE	COUNTY	DRAWN BY: MH	CHECKED BY: DG	
TEXAS	CAMERON	PROJECT NO. IBM09T0018		SHEET NO.
REHABILITATION OF ARROYO COLORADO NORTH LEVEE (WILLACY CANAL TO WHITE RANCH ROAD)				05.02

$TIME$
$DATE$
$FILE$

LEVEE REACH	STATION NO.	STRUCTURE NO.	STRUCTURE SIZE	STRUCTURE USAGE	60 67 SET TY II (3:1)	60 98 CLEAN EXIST STRUCTURE
					01	10
					(18 INCH) EA	EA
ACN2	-0+02.10	452	18-INCH	DRAINAGE		
ACN2	6+09.32	454L	5FT X 5FT	DRAINAGE		
ACN2	6+68.54	454	4FT X 5FT	DRAINAGE		
ACN2	11+85.94	455	2FT X 2FT	DRAINAGE		
ACN2	34+56.57	457B	18-INCH	DRAINAGE	1	1
ACN2	48+12.82	458	24-INCH	DRAINAGE		
ACN2	114+06.90	460	24-INCH	DRAINAGE		
ACN2	114+35.21	460L	12-INCH	DRAINAGE		
ACN2	127+94.48	461	12-INCH	DRAINAGE		2
ACN2	129+85.21	462	18-INCH	DRAINAGE		2
ACN2	142+47.44	462A	18-INCH	DRAINAGE		
ACN2	164+35.92	463	3FT X 3FT	DRAINAGE		
ACN2	201+97.60	464	3FT X 3FT	DRAINAGE		
ACN2 STRUCTURE TOTALS					1	5

S&B INFRASTRUCTURE, LTD.
Engineering Management Technology
S&B Infrastructure, Ltd. Firm Registration Number: 1582

ADDENDUM NO. 2

ARROYO COLORADO NORTH LEVEE
(ACN2)
PLAN & PROFILE

SHEET 3 OF 3

STATE	COUNTY	DRAWN BY: MH	CHECKED BY: DG	
TEXAS	CAMERON	PROJECT NO. IBM09T0018		SHEET NO.
REHABILITATION OF ARROYO COLORADO NORTH LEVEE (WILLACY CANAL TO WHITE RANCH ROAD)				05.03

$TIME$
$DATE$
$FILE$

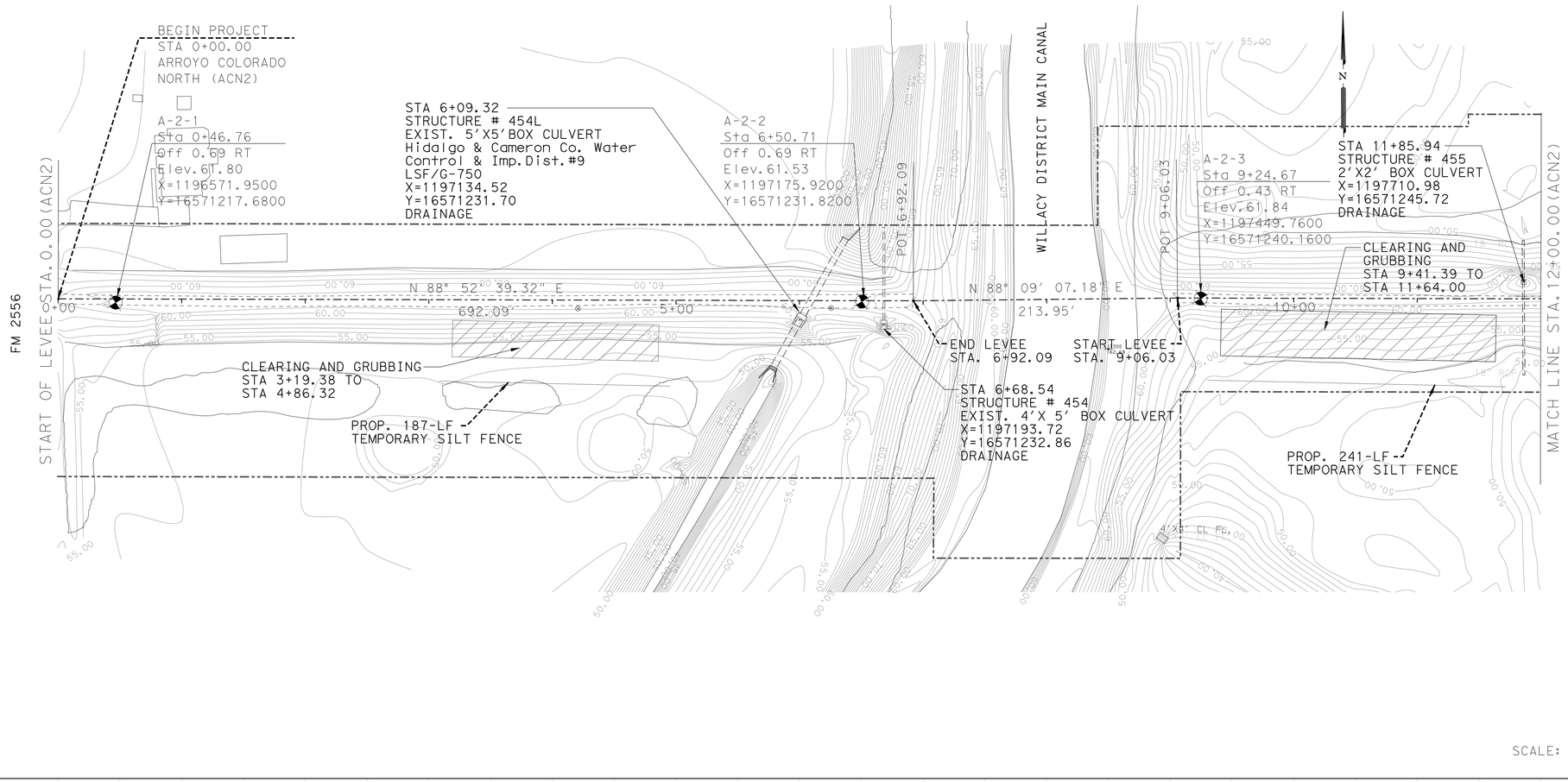

SCALE: H: 1"=50'
V: 1"=5'

PLAN VIEW LEGEND

- PROP CENTERLINE
- EXIST RIGHT-OF-WAY
- EXIST GEOTECHNICAL BORE
- EXIST FLOODWALL
- EXIST OVERHEAD UTILITY LINE
- EXIST SIGN
- EXIST CONTOURS
- EXIST LEVEE TOE
- EXIST FIBER OPTIC LINE
- EXIST GAS LINE
- EXIST WATER LINE
- EXIST TELEPHONE LINE
- EXIST FENCE
- PROP SEDIMENT CONTROL FENCE
- WATER BOUNDARY
- PROP LEVEE MAINTENANCE ROAD

NOTES:

WHEN EXISTING ℄ PROFILE IS ≥ TO MINIMUM TOP OF LEVEE ELEVATION (TOLE) LEVEE SHALL NOT BE MODIFIED UNLESS OTHERWISE SHOWN ON PLAN.

PLANIMETRIC AND RIGHT OF WAY INFORMATION WAS OBTAINED FROM FIELD SURVEYS PROVIDED BY RODS SURVEYING AND DOS LAND SURVEYING RESPECTIVELY.

VERTICAL DATUM: NORTH AMERICAN VERTICAL DATUM 1988 (NAVD88).

IT IS THE CONTRACTOR'S RESPONSIBILITY TO VERIFY LOCATION OF ALL EXISTING UTILITIES (SHOWN/ NOT SHOWN) PRIOR TO CONSTRUCTION.

DIV	ITEM	DESC CODE	DESCRIPTION	UNIT	EST	FINAL
01	57	01	TEMP EROSION CONTROL (SILT FENCE)	LF	428	
31	92	01	SEEDING (PERM)	SY	1482	
31	92	02	VEGETATIVE WATERING	MG	3.0	
31	11	11	CLEARING AND GRUBBING	AC	0.31	
31	11	10	PREP ROW	STA		
31	14	02	REMOVE/STOCKPILE (EXISTING TOPSOIL 6")	CY		
31	32	02	ROCK RIP-RAP	CY		
35	41	02	RAISE LEVEE (EMBANKMENT)	CY		
35	41	03	RAISE LEVEE (TOPSOIL)	CY		
50	20	01	ROADWAY FLEXBASE TY E GR 4	CY		
31	15	01	LAND SMOOTHING	AC		
50	11	02	ROADWAY EMBANKMENT (ACCESS ROAD)	CY		

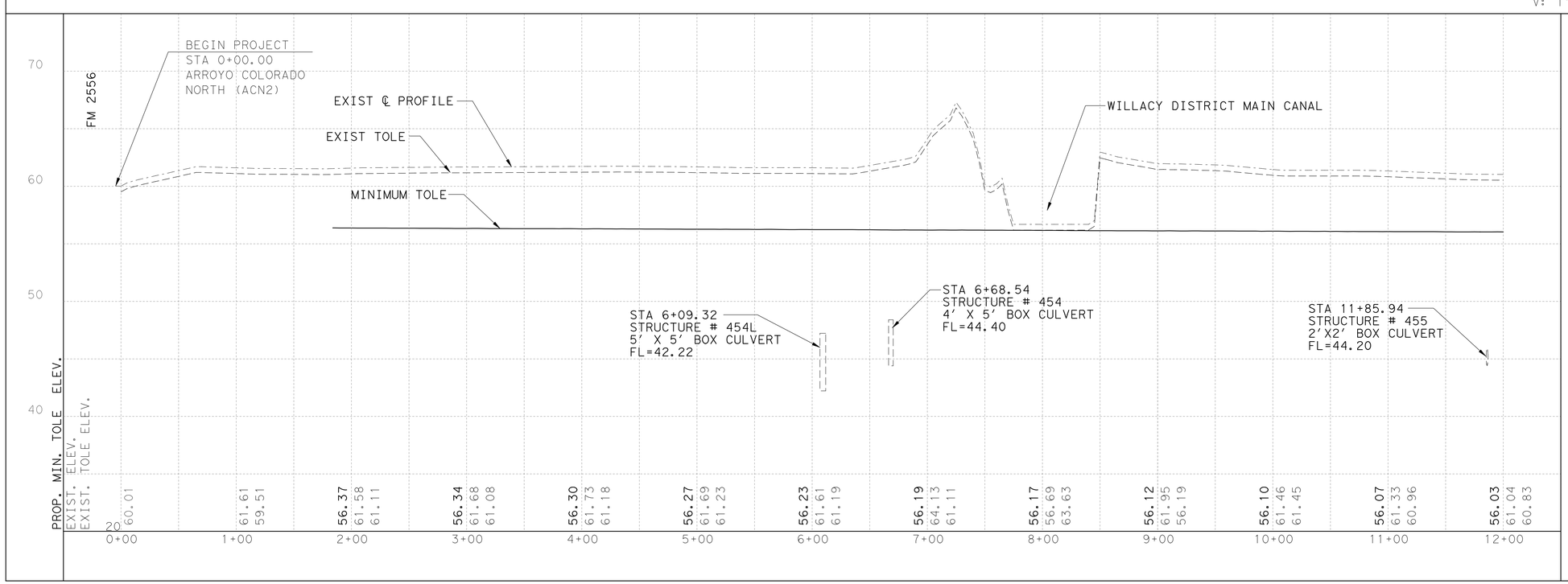

S&B INFRASTRUCTURE, LTD.
Engineering Management Technology

S&B Infrastructure, Ltd. Firm Registration Number: 1582

STATE OF TEXAS
DARIO V. GUERRA III
64669
REGISTERED PROFESSIONAL ENGINEER

The seal appearing on this document was authorized by DARIO V. GUERRA III P.E. 64669, on September 20.09

ADDENDUM NO. 2

ARROYO COLORADO NORTH LEVEE (ACN2) PLAN & PROFILE

SHEET 1 OF 17

STATE	COUNTY	DRAWN BY: MH	CHECKED BY: DG	
TEXAS	CAMERON	PROJECT NO. IBM09T0018		SHEET NO.
REHABILITATION OF ARROYO COLORADO NORTH LEVEE (WILLACY CANAL TO WHITE RANCH ROAD)				08.01

$TIME$
$DATE$
$FILE$

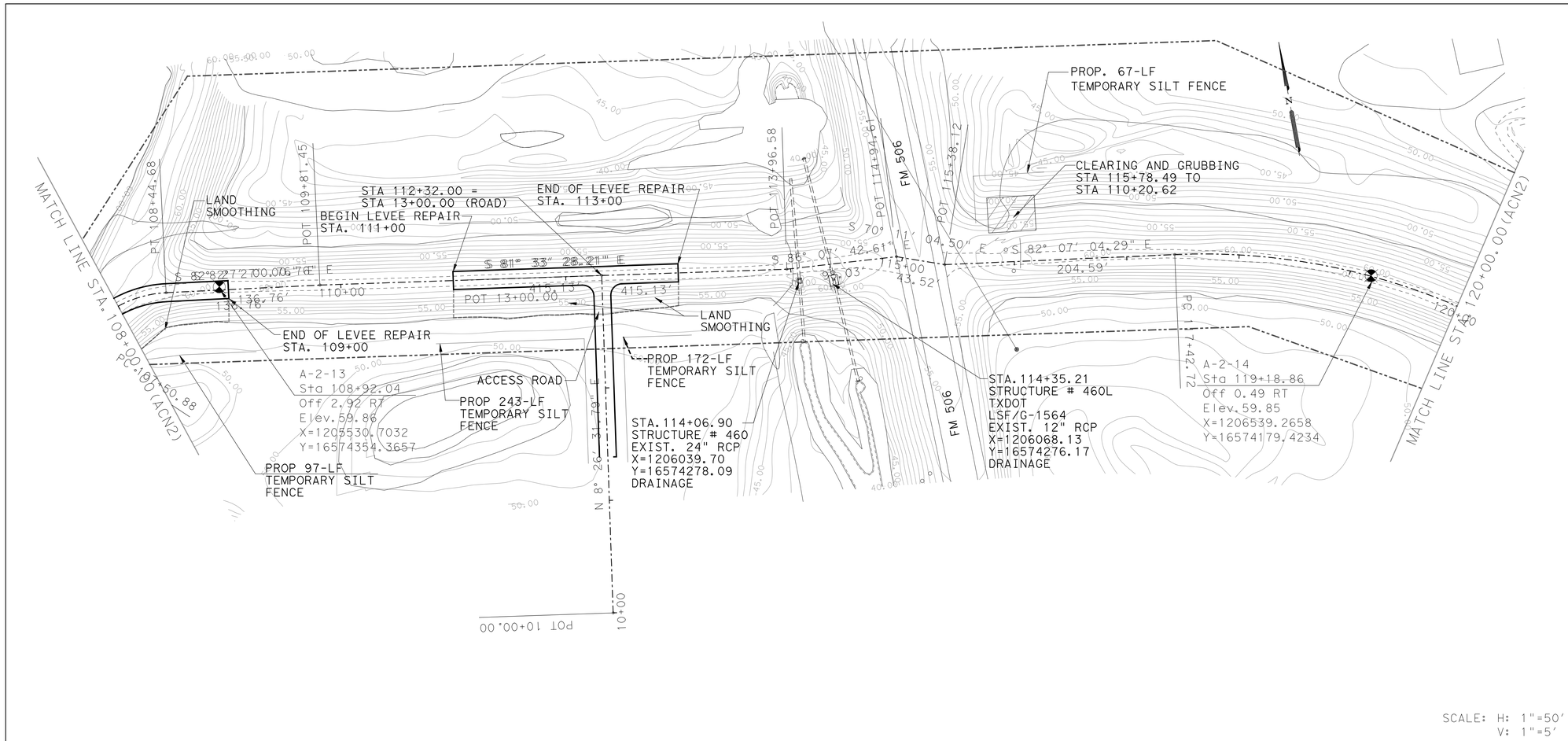

PLAN VIEW LEGEND

- PROP CENTERLINE
- EXIST RIGHT-OF-WAY
- EXIST GEOTECHNICAL BORE
- EXIST FLOODWALL
- EXIST OVERHEAD UTILITY LINE
- EXIST SIGN
- EXIST CONTOURS
- EXIST LEVEE TOE
- EXIST FIBER OPTIC LINE
- EXIST GAS LINE
- EXIST WATER LINE
- EXIST TELEPHONE LINE
- EXIST FENCE
- PROP SEDIMENT CONTROL FENCE
- WATER BOUNDARY
- PROP LEVEE MAINTENANCE ROAD

NOTES:

WHEN EXISTING ℄ PROFILE IS ≥ TO MINIMUM TOP OF LEVEE ELEVATION (TOLE) LEVEE SHALL NOT BE MODIFIED UNLESS OTHERWISE SHOWN ON PLAN.

PLANIMETRIC AND RIGHT OF WAY INFORMATION WAS OBTAINED FROM FIELD SURVEYS PROVIDED BY RODS SURVEYING AND DOS LAND SURVEYING RESPECTIVELY.

VERTICAL DATUM: NORTH AMERICAN VERTICAL DATUM 1988 (NAVD88).

IT IS THE CONTRACTOR'S RESPONSIBILITY TO VERIFY LOCATION OF ALL EXISTING UTILITIES (SHOWN/ NOT SHOWN) PRIOR TO CONSTRUCTION.

DIV	ITEM	DESC CODE	DESCRIPTION	UNIT	EST	FINAL
01	57	01	TEMP EROSION CONTROL (SILT FENCE)	LF	579	
31	92	01	SEEDING (PERM)	SY	1172	
31	92	02	VEGETATIVE WATERING	MG	2.3	
31	11	11	CLEARING AND GRUBBING	AC	0.03	
31	11	10	PREP ROW	STA	5	
31	14	02	REMOVE/STOCKPILE (EXISTING TOPSOIL 6")	CY	237	
31	32	02	ROCK RIP-RAP	CY		
35	41	02	RAISE LEVEE (EMBANKMENT)	CY	940	
35	41	03	RAISE LEVEE (TOPSOIL)	CY	171	
50	20	01	ROADWAY FLEXBASE TY E GR 4	CY	149	
31	15	01	LAND SMOOTHING	AC	0.16	
50	11	02	ROADWAY EMBANKMENT (ACCESS ROAD)	CY	507	

SCALE: H: 1"=50'
V: 1"=5'

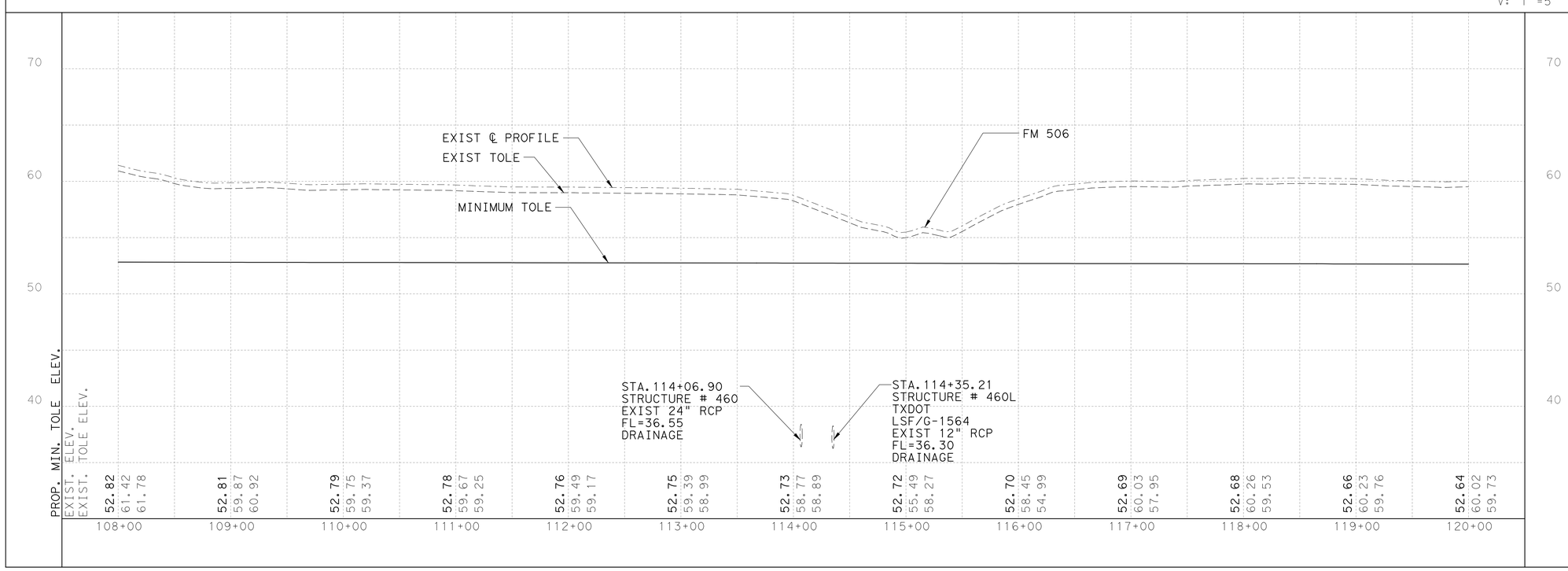

INTERNATIONAL BOUNDARY AND WATER COMMISSION
COMISION INTERNACIONAL DE LIMITES Y AGUAS

S&B INFRASTRUCTURE, LTD.
Engineering Management Technology

S&B Infrastructure, Ltd. Firm Registration Number: 1582

STATE OF TEXAS
DARIO V. GUERRA III
64669
REGISTERED PROFESSIONAL ENGINEER

The seal appearing on this document was authorized by DARIO V. GUERRA III P.E. 64669, on September 30, 2022

ADDENDUM NO. 2

ARROYO COLORADO NORTH LEVEE (ACN2) PLAN & PROFILE

SHEET 10 OF 17

STATE	COUNTY	DRAWN BY: MH	CHECKED BY: DG	
TEXAS	CAMERON	PROJECT NO. IBM09T0018		SHEET NO.
REHABILITATION OF ARROYO COLORADO NORTH LEVEE (WILLACY CANAL TO WHITE RANCH ROAD)				08.10

$TIME$ $DATE$ $FILE$

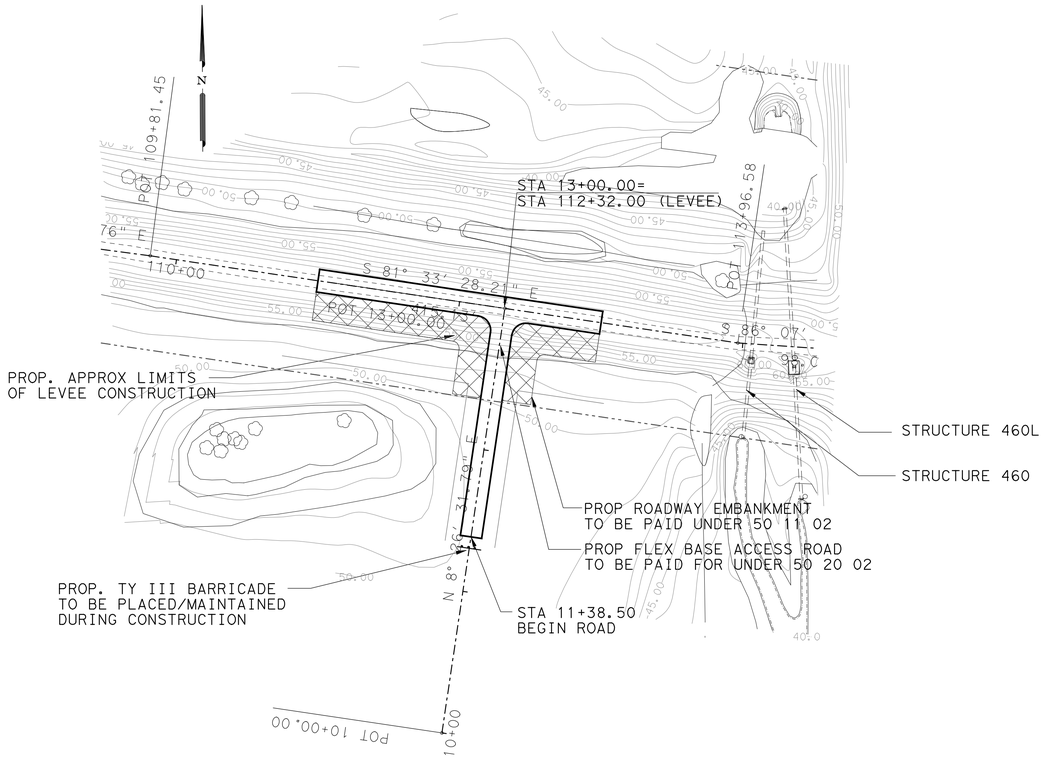

PLAN VIEW LEGEND

- PROP CENTERLINE
- EXIST RIGHT-OF-WAY
- EXIST GEOTECHNICAL BORE
- EXIST FLOODWALL
- EXIST OVERHEAD UTILITY LINE
- EXIST SIGN
- EXIST CONTOURS
- EXIST LEVEE TOE
- EXIST FIBER OPTIC LINE
- EXIST GAS LINE
- EXIST WATER LINE
- EXIST TELEPHONE LINE
- EXIST FENCE
- PROP SEDIMENT CONTROL FENCE
- WATER BOUNDARY
- PROP LEVEE MAINTENANCE ROAD

NOTES:

WHEN EXISTING ℄ PROFILE IS ≥ TO MINIMUM TOP OF LEVEE ELEVATION (TOLE) LEVEE SHALL NOT BE MODIFIED UNLESS OTHERWISE SHOWN ON PLAN.

PLANIMETRIC AND RIGHT OF WAY INFORMATION WAS OBTAINED FROM FIELD SURVEYS PROVIDED BY RODS SURVEYING AND DOS LAND SURVEYING RESPECTIVELY.

VERTICAL DATUM: NORTH AMERICAN VERTICAL DATUM 1988 (NAVD88).

IT IS THE CONTRACTOR'S RESPONSIBILITY TO VERIFY LOCATION OF ALL EXISTING UTILITIES (SHOWN/ NOT SHOWN) PRIOR TO CONSTRUCTION.

DIV	ITEM	DESC CODE	DESCRIPTION	UNIT	EST	FINAL
01	57	01	TEMP EROSION CONTROL (SILT FENCE)	LF		
31	92	01	SEEDING (PERM)	SY		
31	92	02	VEGETATIVE WATERING	MG		
31	11	11	CLEARING AND GRUBBING	AC		
31	11	10	PREP ROW	STA		
31	14	02	REMOVE/STOCKPILE (EXISTING TOPSOIL 6")	CY		
31	32	02	ROCK RIP-RAP	CY		
35	41	02	RAISE LEVEE (EMBANKMENT)	CY	507	
35	41	03	RAISE LEVEE (TOPSOIL)	CY		
50	20	01	ROADWAY FLEXBASE TY E GR 4	CY	27	
31	15	01	LAND SMOOTHING	AC		
50	11	02	ROADWAY EMBANKMENT (ACCESS ROAD)	CY		

SCALE: H: 1"=50'
V: 1"=5'

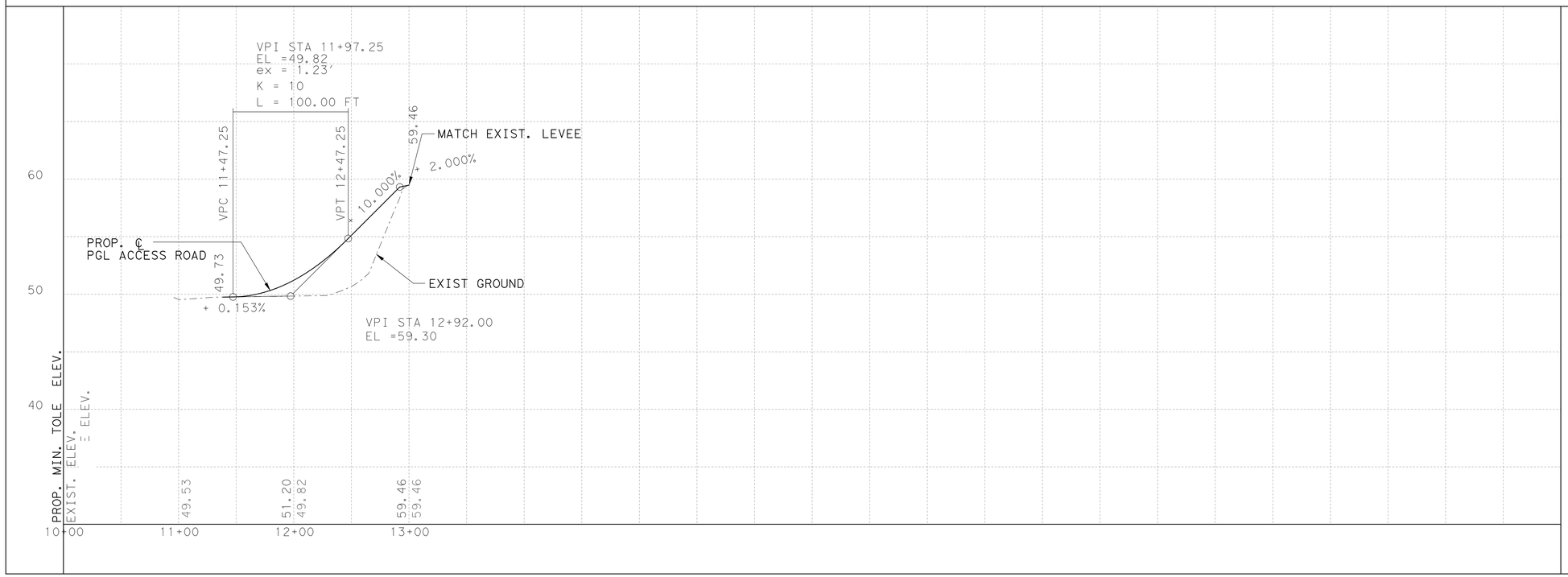

INTERNATIONAL BOUNDARY AND WATER COMMISSION
COMISIÓN INTERNACIONAL DE LÍMITES Y AGUAS

S&B INFRASTRUCTURE, LTD.
Engineering Management Technology

S&B Infrastructure, Ltd. Firm Registration Number: 1582

STATE OF TEXAS
DARIO V. GUERRA III
64669
REGISTERED PROFESSIONAL ENGINEER

The seal appearing on this document was authorized by DARIO V. GUERRA III P.E. 64669, on September 3 20 09

ADDENDUM NO. 2

PLAN AND PROFILE
ACCESS ROAD
STA 112+32.00

SHEET 1 OF 1

STATE	COUNTY	DRAWN BY: MH	CHECKED BY: DG	
TEXAS	CAMERON	PROJECT NO. IBM09T0018		SHEET NO.
REHABILITATION OF ARROYO COLORADO NORTH LEVEE (WILLACY CANAL TO WHITE RANCH ROAD)				08.18

$TIME$
$DATE$
$FILE$

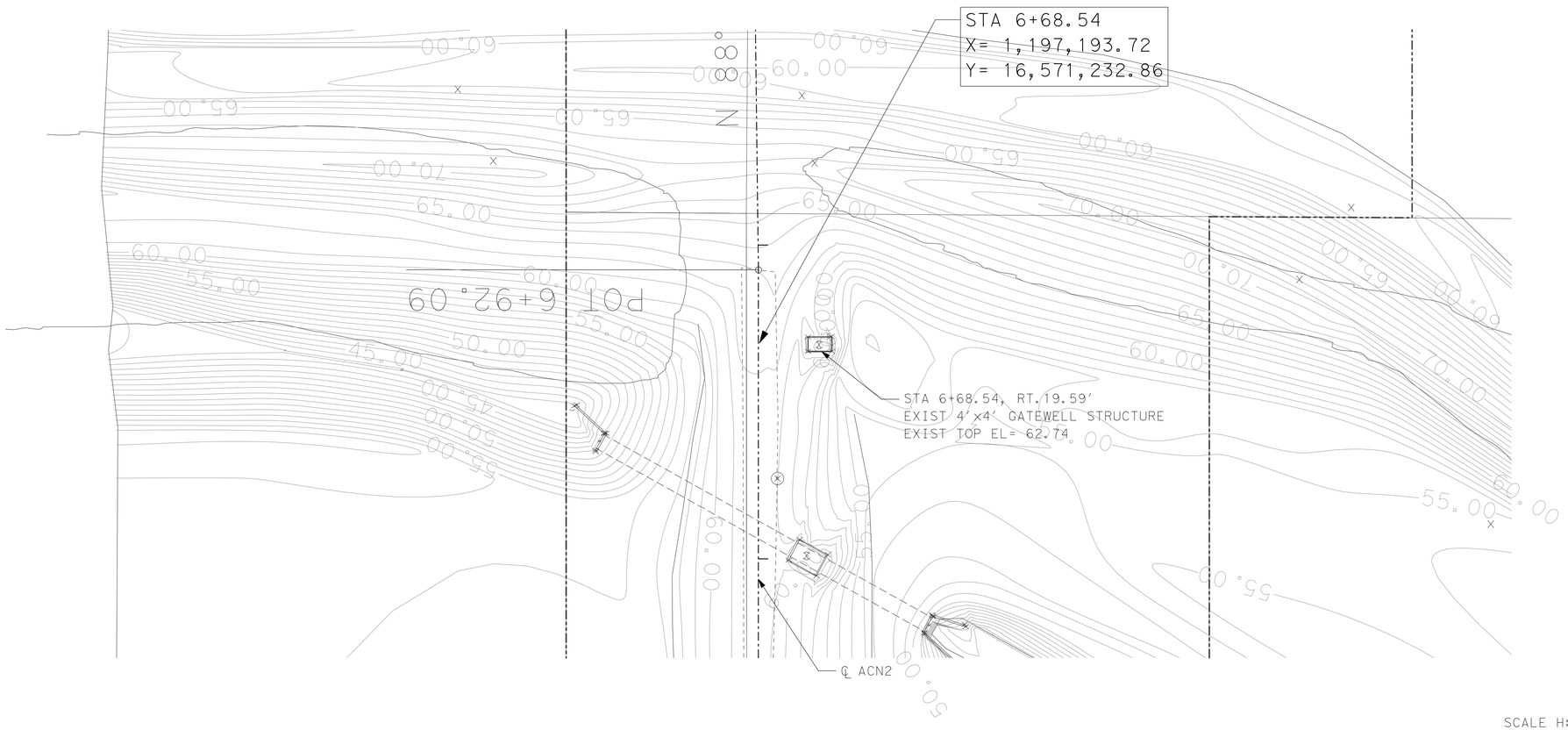

SCALE H: 1"=20'
V: 1"=10'

PLAN VIEW LEGEND

	PROP CENTERLINE
	EXIST RIGHT-OF-WAY
	EXIST GEOTECHNICAL BORE
	EXIST FLOODWALL
EL-OH	EXIST OVERHEAD UTILITY LINE
	EXIST SIGN
101	EXIST CONTOURS
	EXIST LEVEE TOE
F/O	EXIST FIBER OPTIC LINE
GAS	EXIST GAS LINE
W	EXIST WATER LINE
T	EXIST TELEPHONE LINE
	EXIST FENCE
	PROP SEDIMENT CONTROL FENCE
	WATER BOUNDARY
	PROP LEVEE MAINTENANCE ROAD

NOTES:

1. CULVERT INFORMATION TAKEN FROM AS BUILT PROVIDED BY IBWC IF AVAILABLE.
2. CULVERTS WERE NOT CHECKED FOR HYDRAULICS ADEQUACY UNDER THIS TASK ORDER.

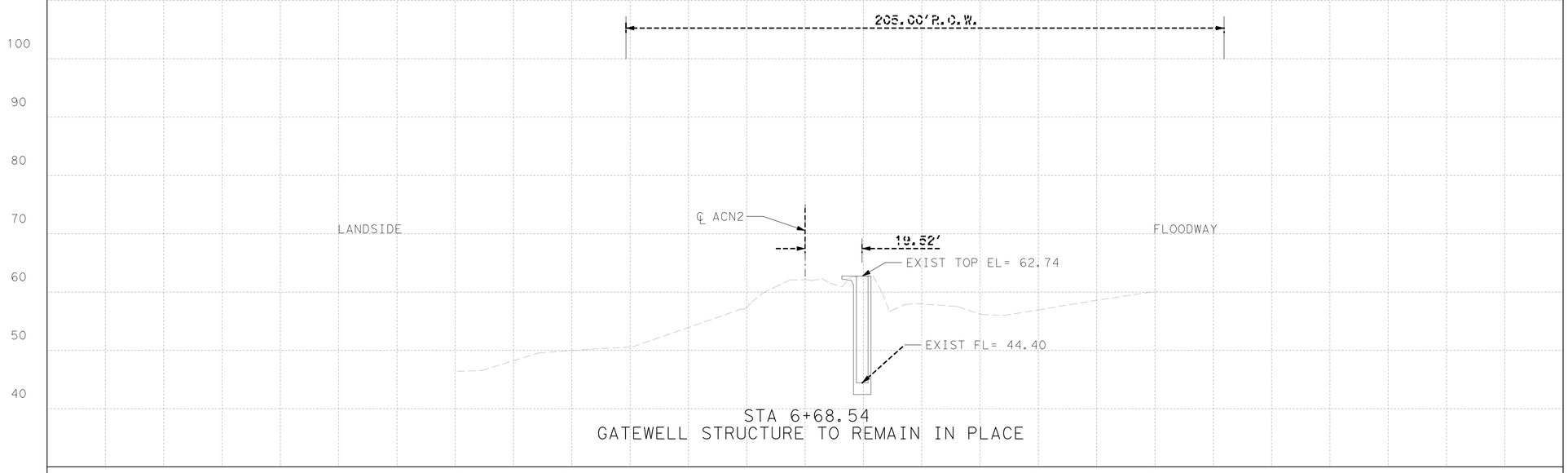

STA 6+68.54
GATEWELL STRUCTURE TO REMAIN IN PLACE

S&B INFRASTRUCTURE, LTD.
Engineering Management Technology
S&B Infrastructure, Ltd. Firm Registration Number: 1582

DL, INC.
DOS LOGISTICS, INC.
212 W. 3rd Sreet Phone: (956) 968-8800
Weslaco, Tx. 78596 Fax: (956) 447-8194

STATE OF TEXAS
JOSE G. REYES JR.
93827
LICENSED PROFESSIONAL ENGINEER

The seal appearing on this document was authorized by GUILLERMO A. ARRATIA P.E. 94001, on SEP. 3, 2009.

ADDENDUM NO. 2

ARROYO COLORADO NORTH LEVEE (ACN2)
STRUCTURE NO. 454
STA 6+68.54

SHEET 3 OF 13

STATE	COUNTY	DRAWN BY:	CHECKED BY:	
TEXAS	CAMERON	PROJECT NO. IBM09T0018		SHEET NO.
REHABILITATION OF ARROYO COLORADO NORTH LEVEE (WILLACY CANAL TO WHITE RANCH ROAD)				12.04

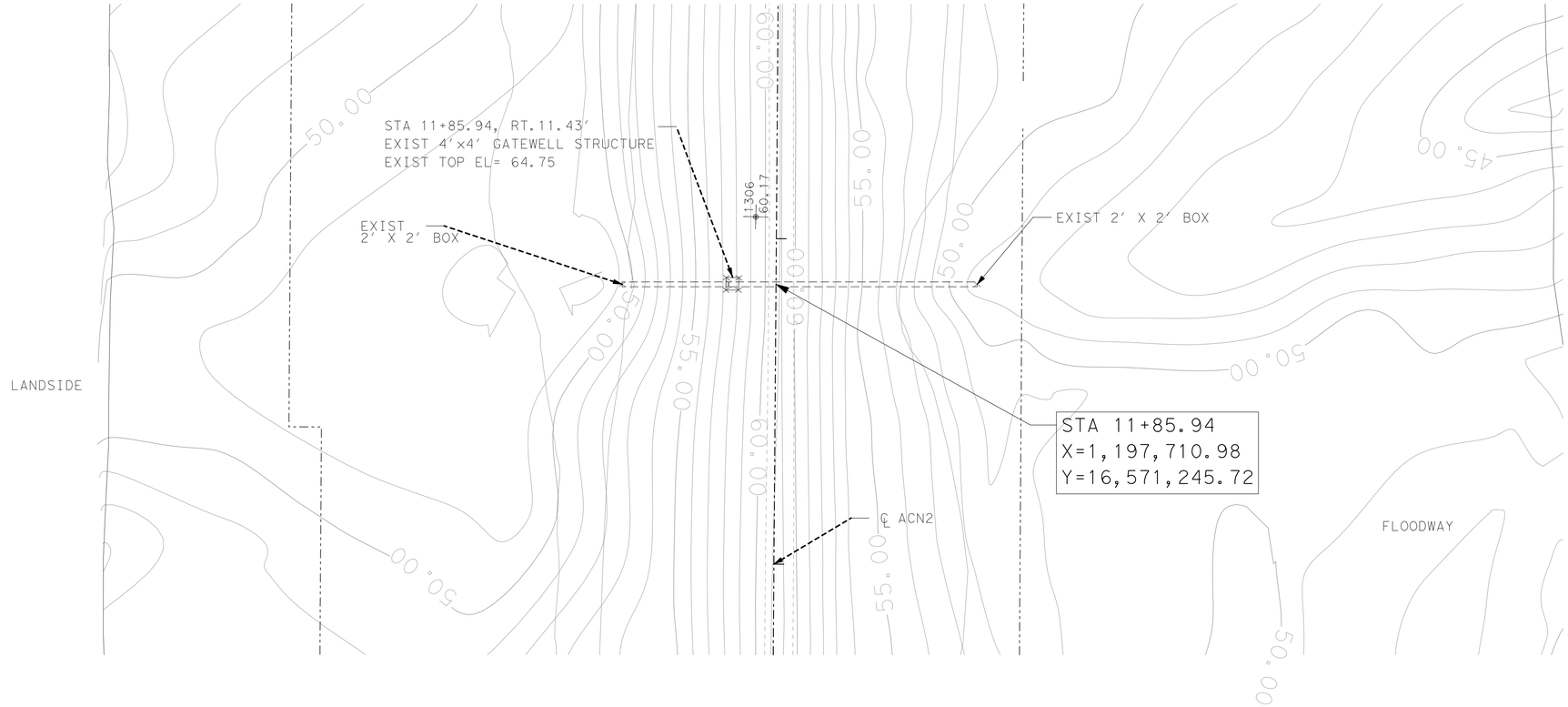

SCALE H: 1"=20'
V: 1"=10'

PLAN VIEW LEGEND

- PROP CENTERLINE
- EXIST RIGHT-OF-WAY
- EXIST GEOTECHNICAL BORE
- EXIST FLOODWALL
- EXIST OVERHEAD UTILITY LINE
- EXIST SIGN
- EXIST CONTOURS
- EXIST LEVEE TOE
- EXIST FIBER OPTIC LINE
- EXIST GAS LINE
- EXIST WATER LINE
- EXIST TELEPHONE LINE
- EXIST FENCE
- PROP SEDIMENT CONTROL FENCE
- WATER BOUNDARY
- PROP LEVEE MAINTENANCE ROAD

NOTES:

1. CULVERT INFORMATION TAKEN FROM AS BUILT PROVIDED BY IBWC IF AVAILABLE.
2. CULVERTS WERE NOT CHECKED FOR HYDRAULICS ADEQUACY UNDER THIS TASK ORDER.

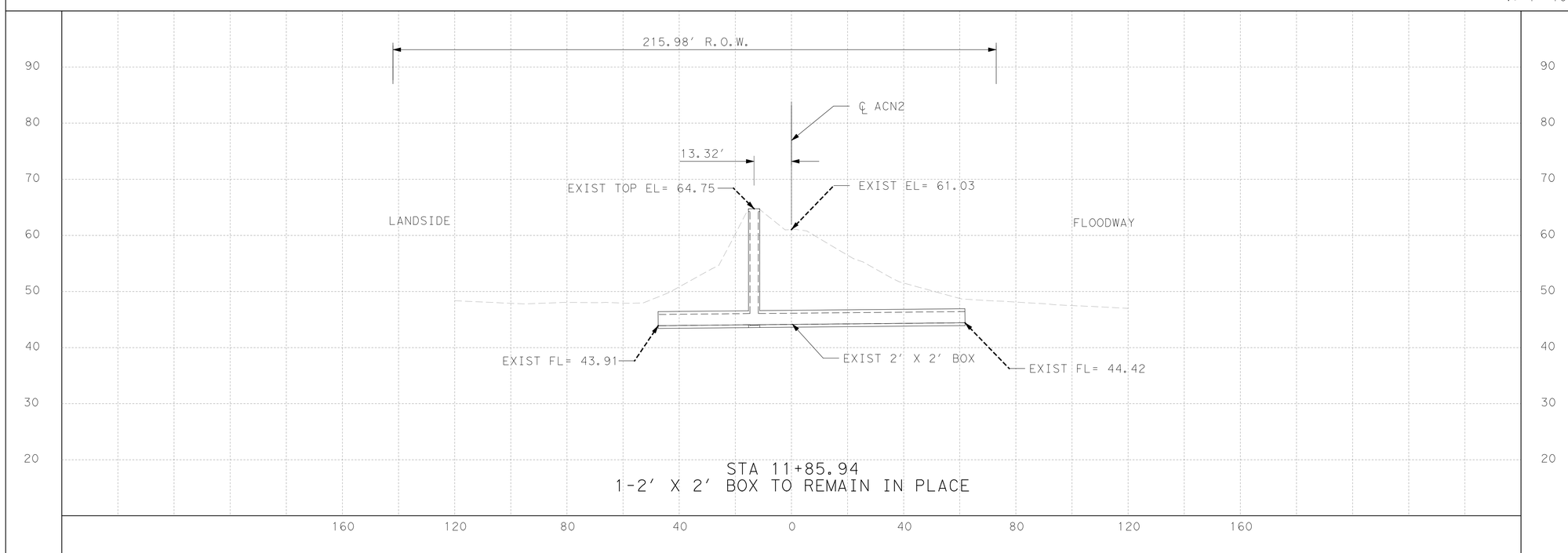

STA 11+85.94
1-2' X 2' BOX TO REMAIN IN PLACE

S&B INFRASTRUCTURE, LTD.
Engineering Management Technology
S&B Infrastructure, Ltd. Firm Registration Number: 1582

DL, INC.
DOS LOGISTICS, INC.
212 W. 3rd Sreet Phone: (956) 968-8800
Weslaco, Tx. 78596 Fax: (956) 447-8194

STATE OF TEXAS
JOSE G. REYES JR.
93827
LICENSED
PROFESSIONAL ENGINEER

The seal appearing on this document was authorized by GUILLERMO A. ARRATIA P.E. 94001, on Sep. 3, 2009

ADDENDUM NO. 2

ARROYO COLORADO NORTH
LEVEE (ACN2)
STRUCTURE NO. 455
STA 11+85.94

SHEET 4 OF 13

STATE	COUNTY	DRAWN BY:	CHECKED BY:	
TEXAS	CAMERON	PROJECT NO. IBM09T0018		SHEET NO.
REHABILITATION OF ARROYO COLORADO NORTH LEVEE (WILLACY CANAL TO WHITE RANCH ROAD)				12.05

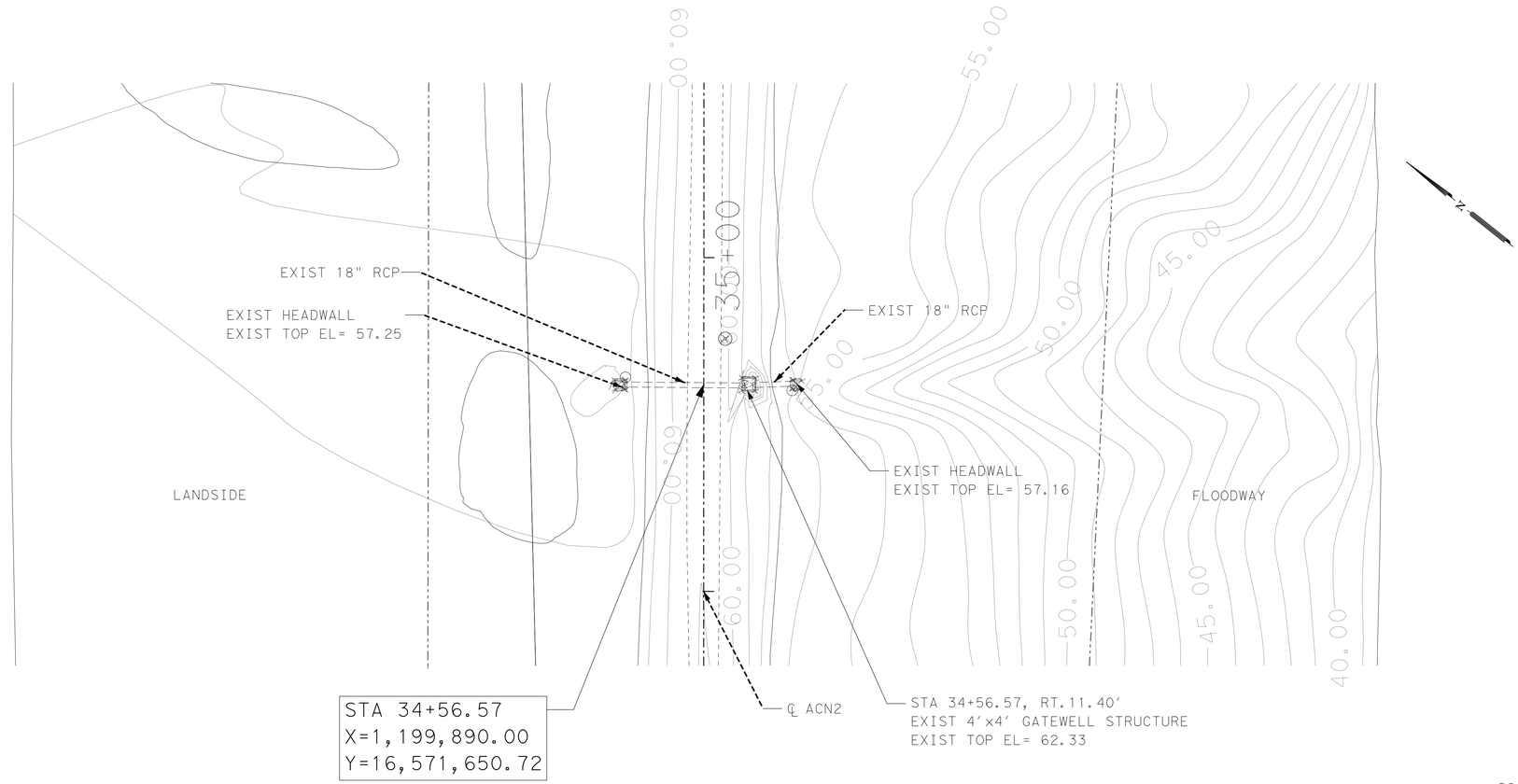

SCALE H: 1"=20'
V: 1"=10'

PLAN VIEW LEGEND

- PROP CENTERLINE
- EXIST RIGHT-OF-WAY
- EXIST GEOTECHNICAL BORE
- EXIST FLOODWALL
- EXIST OVERHEAD UTILITY LINE
- EXIST SIGN
- EXIST CONTOURS
- EXIST LEVEE TOE
- EXIST FIBER OPTIC LINE
- EXIST GAS LINE
- EXIST WATER LINE
- EXIST TELEPHONE LINE
- EXIST FENCE
- PROP SEDIMENT CONTROL FENCE
- WATER BOUNDARY
- PROP LEVEE MAINTENANCE ROAD

NOTES:

1. CULVERT INFORMATION TAKEN FROM AS BUILT PROVIDED BY IBWC IF AVAILABLE.
2. CULVERTS WERE NOT CHECKED FOR HYDRAULICS ADEQUACY UNDER THIS TASK ORDER.

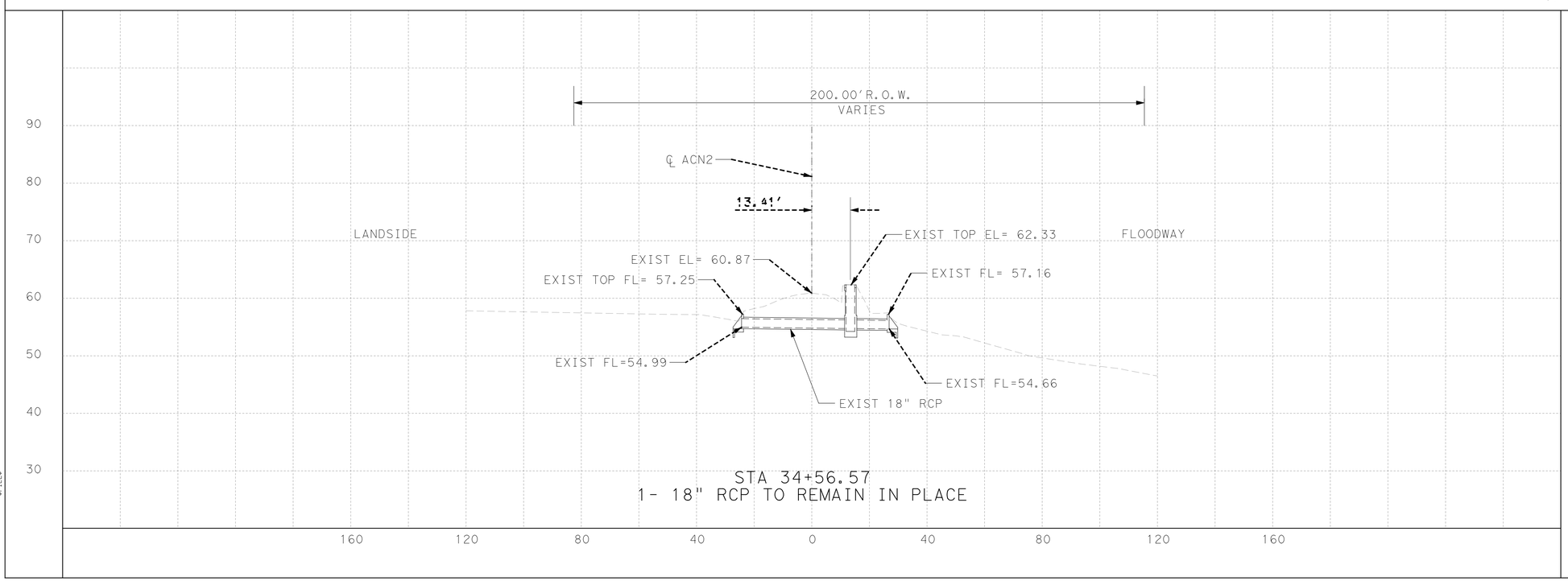

STA 34+56.57
1- 18" RCP TO REMAIN IN PLACE

S&B INFRASTRUCTURE, LTD.
Engineering Management Technology
S&B Infrastructure, Ltd. Firm Registration Number: 1582

DL, INC.
DOS LOGISTICS, INC.
212 W. 3rd Sreet
Weslaco, Tx. 78596
Phone: (956) 968-8800
Fax: (956) 447-8194

STATE OF TEXAS
JOSE G. REYES JR.
93827
LICENSED
PROFESSIONAL ENGINEER

The seal appearing on this document was authorized by GUILLERMO A. ARRATIA P.E. 94001, on SEP. 3, 2009

ADDENDUM NO. 2

ARROYO COLORADO NORTH
LEVEE (ACN2)
STRUCTURE NO. 457B
34+56.57

SHEET 5 OF 13

STATE	COUNTY	DRAWN BY:	CHECKED BY:	
TEXAS	CAMERON	PROJECT NO. IBM09T0018		SHEET NO.
REHABILITATION OF ARROYO COLORADO NORTH LEVEE (WILLACY CANAL TO WHITE RANCH ROAD)				12.06

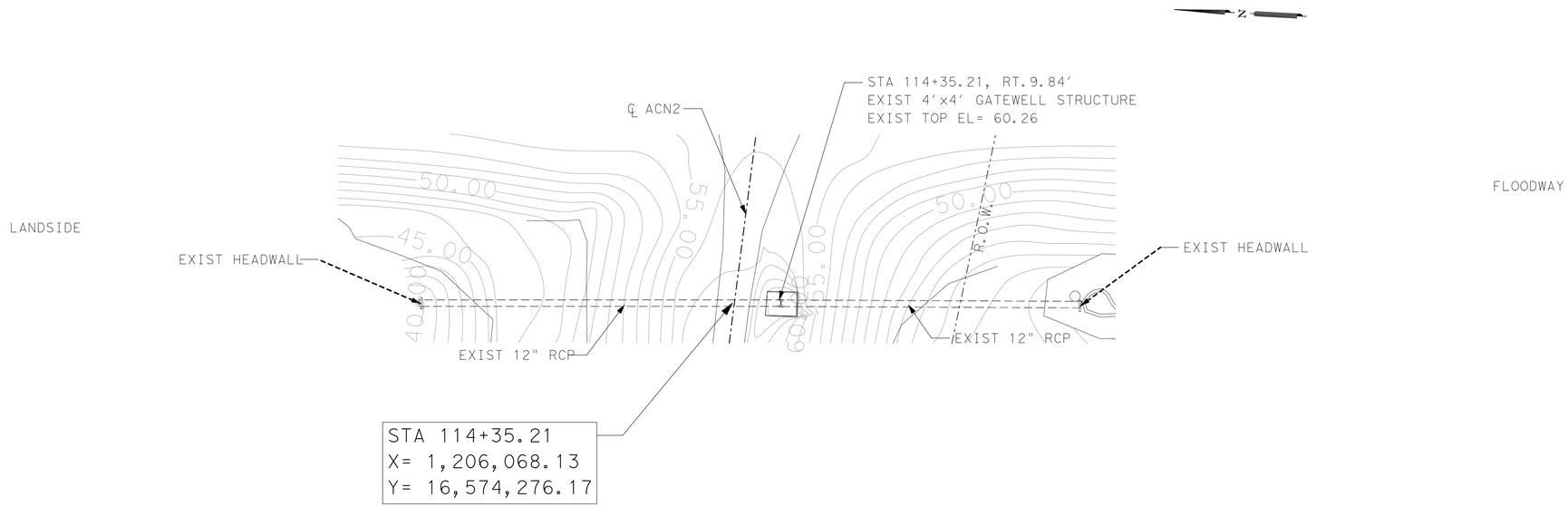

PLAN VIEW LEGEND

- PROP CENTERLINE
- EXIST RIGHT-OF-WAY
- EXIST GEOTECHNICAL BORE
- EXIST FLOODWALL
- EXIST OVERHEAD UTILITY LINE
- EXIST SIGN
- EXIST CONTOURS
- EXIST LEVEE TOE
- EXIST FIBER OPTIC LINE
- EXIST GAS LINE
- EXIST WATER LINE
- EXIST TELEPHONE LINE
- EXIST FENCE
- PROP SEDIMENT CONTROL FENCE
- WATER BOUNDARY
- PROP LEVEE MAINTENANCE ROAD

NOTES:

1. CULVERT INFORMATION TAKEN FROM AS BUILT PROVIDED BY IBWC IF AVAILABLE.
2. CULVERTS WERE NOT CHECKED FOR HYDRAULICS ADEQUACY UNDER THIS TASK ORDER.

STRUCTURE TYPE:
DRAINAGE
OWNER:
TxDOT
LICENSE No. LBF/G-1564

SCALE H: 1"=20'
V: 1"=10'

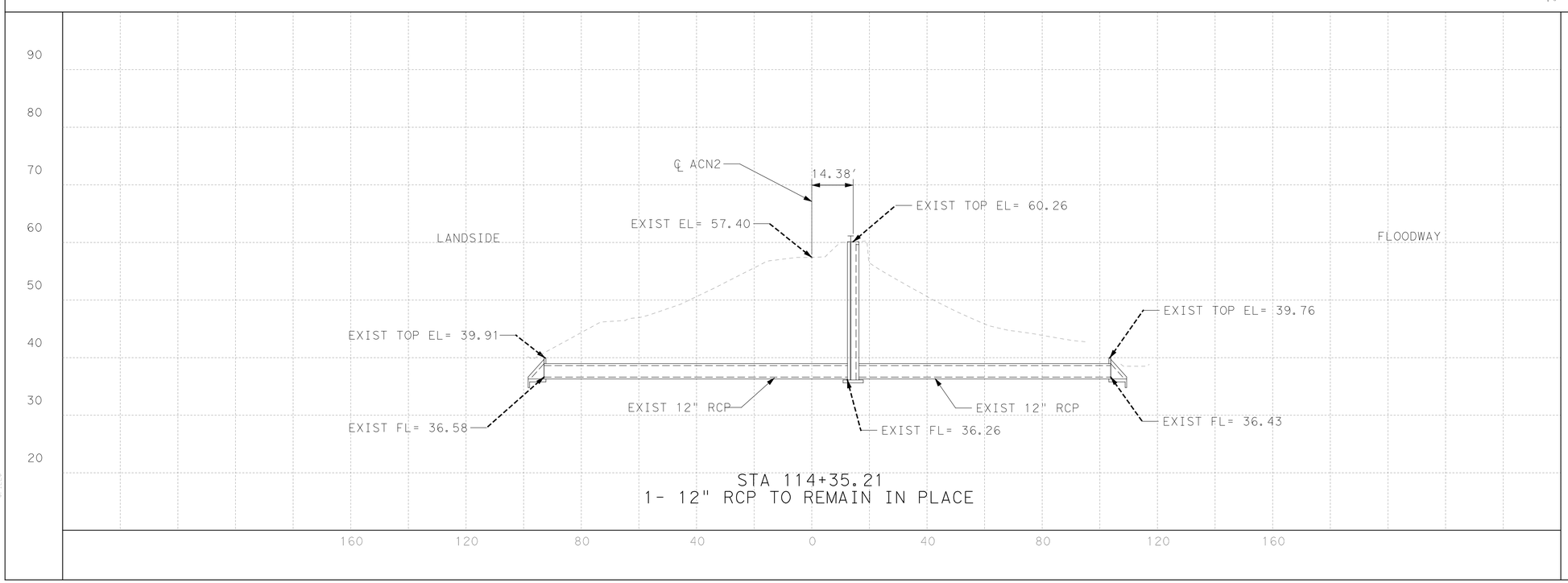

S&B INFRASTRUCTURE, LTD.
Engineering Management Technology
S&B Infrastructure, Ltd. Firm Registration Number: 1582

DL, INC.
DOS LOGISTICS, INC.
212 W. 3rd Sreet
Weslaco, Tx. 78596
Phone: (956) 968-8800
Fax: (956) 447-8194

STATE OF TEXAS
JOSE G. REYES JR.
93827
LICENSED
PROFESSIONAL ENGINEER

The seal appearing on this document was authorized by GUILLERMO A. ARRATIA P.E. 94001, on SEP. 3, 2009

ADDENDUM NO. 2

ARROYO COLORADO NORTH
LEVEE (ACN2)
STRUCTURE NO. 460L
STA 114+35.21

SHEET 8 OF 13

STATE	COUNTY	DRAWN BY:	CHECKED BY:	
TEXAS	CAMERON	PROJECT NO. IBM09T0018		SHEET NO.
REHABILITATION OF ARROYO COLORADO NORTH LEVEE (WILLACY CANAL TO WHITE RANCH ROAD)				12.09

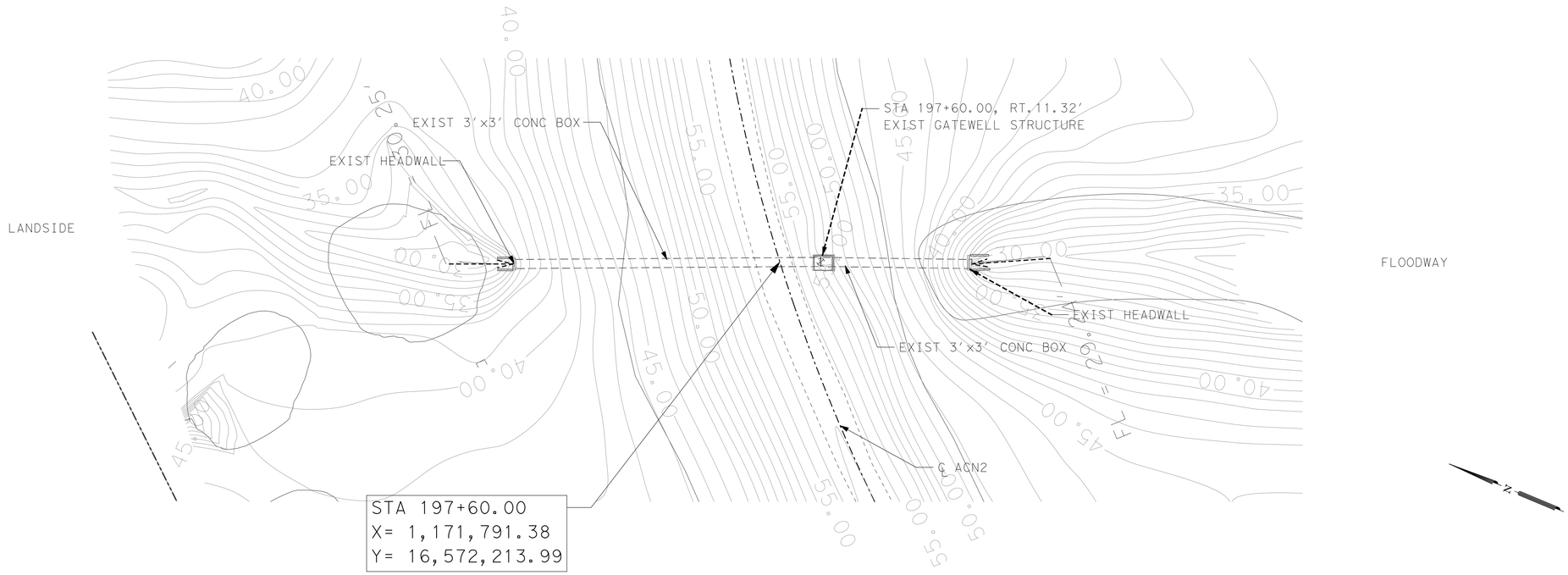

PLAN VIEW LEGEND

	PROP CENTERLINE
	EXIST RIGHT-OF-WAY
	EXIST GEOTECHNICAL BORE
	EXIST FLOODWALL
EL-OH	EXIST OVERHEAD UTILITY LINE
	EXIST SIGN
101	EXIST CONTOURS
	EXIST LEVEE TOE
F/O	EXIST FIBER OPTIC LINE
GAS	EXIST GAS LINE
W	EXIST WATER LINE
T	EXIST TELEPHONE LINE
	EXIST FENCE
	PROP SEDIMENT CONTROL FENCE
	WATER BOUNDARY
	PROP LEVEE MAINTENANCE ROAD

NOTES:

1. CULVERT INFORMATION TAKEN FROM AS BUILT PROVIDED BY IBWC IF AVAILABLE.
2. CULVERTS WERE NOT CHECKED FOR HYDRAULICS ADEQUACY UNDER THIS TASK ORDER.

SCALE H: 1"=20'
V: 1"=10'

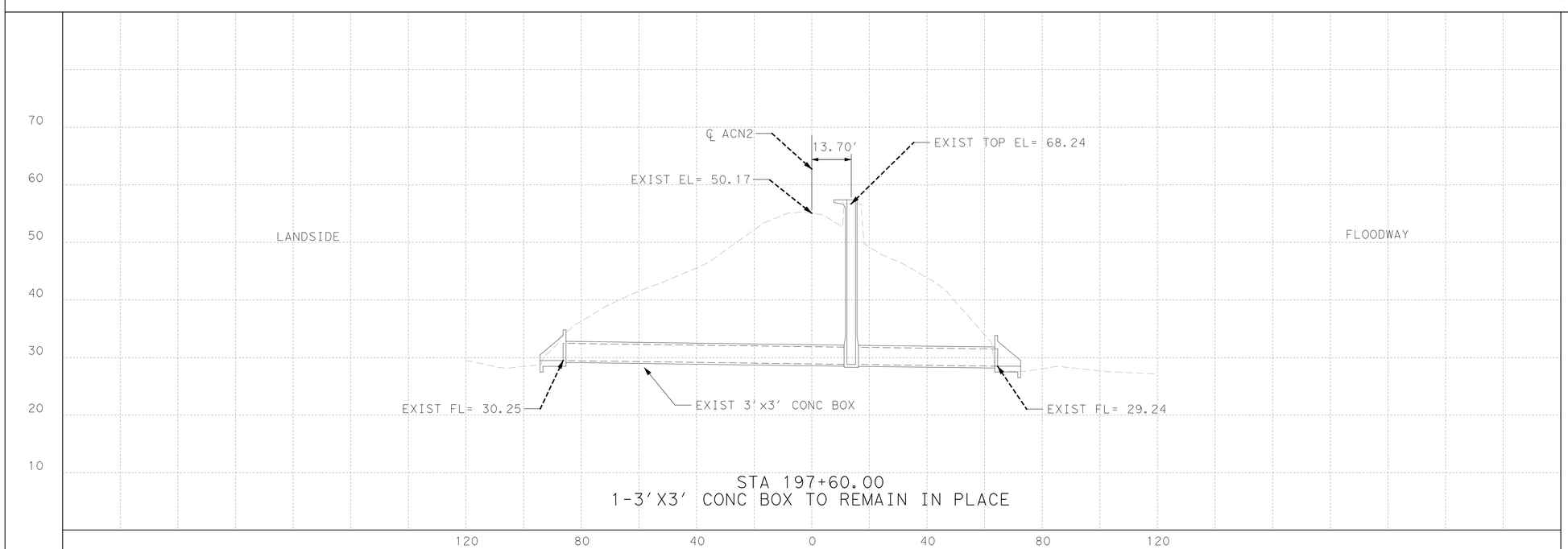

STA 197+60.00
1-3'X3' CONC BOX TO REMAIN IN PLACE

S&B INFRASTRUCTURE, LTD.
Engineering Management Technology
S&B Infrastructure, Ltd. Firm Registration Number: 1582

DL, INC.
DOS LOGISTICS, INC.
212 W. 3rd Sreet Weslaco, Tx. 78596
Phone: (956) 968-8800 Fax: (956) 447-8194

STATE OF TEXAS
JOSE G. REYES JR.
93827
LICENSED PROFESSIONAL ENGINEER

The seal appearing on this document was authorized by GUILLERMO A. ARRATIA P.E. 94001, on SEP. 3, 2009

ADDENDUM NO. 2

ARROYO COLORADO NORTH
LEVEE (ACN2)
STRUCTURE NO. 464
STA 197+60.00

SHEET 13 OF 13

STATE	COUNTY	DRAWN BY:	CHECKED BY:	
TEXAS	CAMERON	PROJECT NO. IBM09T0018		SHEET NO.
REHABILITATION OF ARROYO COLORADO NORTH LEVEE (WILLACY CANAL TO WHITE RANCH ROAD)				12.14

During the planning phase of project development the following environmental permits, issues and commitments have been developed during coordination with resource agencies, local governmental entities and the general public. Any change orders and/or deviations from the final design must be reported to the Engineer prior to the commencement of construction activities, as additional environmental clearances may be required.

All environmental statements in the signed Finding of NO Significant Impacts for all associated projects will be adhered to and are environmentally binding.

I. Clean Water Act, Section 402 National Pollutant Discharge Elimination System

(Addresses MS4 requirements for project)

☐ No Action Required ■ Required Action

1. A storm water pollution prevention plan (SW3P) would be developed during project design to minimize impacts to receiving water, as specified by USEPA regulations for construction projects. The storm water pollution prevention plan would include construction areas along the levee system, as well as equipment staging areas.

2. To prevent sedimentation, BMPs such as sediment fences and/or sediment barriers around wetlands would be installed while construction occurs in affected areas.

II. Clean Water Act, Section 401 and 404 Compliance

Filling, dredging or excavating in any water bodies, rivers, creeks, streams, wetlands or wet areas is prohibited unless specified in the USACE permit and approved by the Engineer.

☐ No Permit Required ■ Coordination with USACE required.

1. Limited wetlands are present near the levee, but no wetlands are close enough to the proposed expansion areas to be affected by levee raising and potential footprint expansion. No impacts to jurisdictional wetlands are anticipated from levee improvements.

III. Cultural Resources

☐ No Action Required ■ Required Action

1. Archeological Resources

Intact prehistoric archeological resources that may contain sufficient information to be NRHP eligible may occur in the APE in areas that are designated as high probability for archeological resources, a Phase I archeological survey is being conducted prior to ground disturbing or levee improvement activities.

A cultural resources survey was completed on June 2009, and the THC concurred that the proposed undertaking will have no adverse effects on Historic Resources. The concurrence was based on the following: The proposed action will increase the height of the levee by up to 2 feet on approximately 8.6% of the 11-mile segment, 4% of the segment will be increased by 2-4 feet, and approximately 2.4% to be increased in height by 4-6 feet. Also, moderately higher increases are proposed for approximately 1.2% of the 11 mile segment. Based on this understanding and the condition that the only resource that will be physically impacted by the work is the levee itself THC concurred with the IBWC's findings. Consultation with THC on the archeological sites is currently underway.

2. Architectural Resources

A number of architectural resources that include gatewells and screwgates (top of levee) and culverts and drains (under the levee) may be adversely affected by the proposed improvements which may be considered eligible for the NRHP.

Section 106 Consultation with THC is currently in progress.

3. Native American Resources

Native American consultation has been initiated and is still on-going with the Texas SHPO.

Upon discovery of archeological artifacts (bones, burnt rock, flint, pottery, etc.) cease work in the immediate area and contact the Engineer immediately.

Refer to specification 01 57 00 in the event historical issues or archaeological artifacts are found during construction.

IV. Hazardous Materials or Contamination Issues

☐ No Action Required ■ Required Action

If potentially hazardous material and/or contaminated media (i.e. soil, groundwater, surface water, sediment, building materials) are unexpectedly encountered during construction, cease work in the immediate area and contact TCEQ & USIBWC EMD immediately.

V. Federal Listed, and Proposed Threatened and Endangered Species, Critical Habitat, State Listed Species, Candidate Species and Migratory Birds

☐ No Action Required ■ Required Action

1. Unforeseen adverse effects may be prevented by timing construction activities to avoid breeding and nesting seasons of T&E species. Consultation with TPWD and USFWS will be required to schedule construction activities to minimize potential impacts on species and species habitat.

2. Construction activities would be scheduled to occur outside the March through August 31 migratory bird nesting season.

3. When warranted for protection of biological resources the need for levee footprint expansion would be eliminated by levee slope adjustment.

4. Coordination is required with USFWS & TPWD; no biological assessment in this area due to pending environmental assessment.

If any of the listed species are observed, cease work in the immediate area, do not disturb species or habitat and contact the Engineer immediately. The work may not remove active nests from bridges and other structures during nesting season of the birds associated with the nests. If caves or sinkholes are discovered, cease work in the immediate area, and contact the USFWS & USIBWC EMD immediately.

If an active nest is found, immediately contact the USFWS & USIBWC EMD and cease work around nest at a 25 foot radius.

VI. Vegetation Resources

☐ No Action Required ■ Required Action

1. All expansion would take place along the centerline of the current levee, limiting vegetation removal(grasses and weedy species) on the levee slopes.

2. After construction is complete, the expanded levee, as well as any required construction corridor, would be re-vegetated with native herbaceous vegetation from approved USFWS lists.

VII. Soil

1. Earthwork would be planned and conducted in such a manner as to minimize the duration of exposure of unprotected soil. Protection would be provided by accelerated growth of permanent vegetation, temporary vegetation, mulching, or netting. Slopes too steep for stabilization by other means would be stabilized by hydroseeding, mulch anchored in place, covering by anchored netting, sodding, or such combination of these and other methods as may be necessary for effective erosion control.

2.. Use of best management practices such as rock berms, silt fences, and single point construction entries would minimize erosion during construction.

VIII. Other Environmental Issues

☐ No Action Required ■ Required Action

Transportation

1. All construction activities would occur within the existing ROW.

2. Transportation of construction equipment and the use of personnel vehicles would mainly occur within the levee ROW and along the toe of the levee road adjacent to the levee.

3. Any new easements would have to be obtained by USIBWC if levee footprints are increased from existing conditions.

4. Coordination during construction activities would take place with U.S. Customs and Border Patrol concerning Levee Road usage.

Engineering Measures

1. During the project construction, existing access points to the levee road would remain in service; because no significant modifications would be made to the levee 3:1 slope ratio, lateral access to the levee road would continue as currently available.

2. During the project construction, methods such as wetting the soil would be employed to prevent erosion from unvegetated slopes and/or corridors.

3. An environmental monitor should be available during construction.

4. When warranted due to engineering conditions, or for protection of biological or cultural resources, the need for levee footprint expansions would be limited by levee slope adjustment.

INTERNATIONAL BOUNDARY AND WATER COMMISSION
COMISIÓN INTERNACIONAL DE LÍMITES Y AGUAS

S&B INFRASTRUCTURE, LTD.
Engineering Management Technology

S&B Infrastructure, Ltd. Firm Registration Number: 1582

ADDENDUM NO. 2

ENVIRONMENTAL PERMITS, ISSUES & COMMENTS (EPIC) ARROYO COLORADO NORTH LEVEE (ACN2)

SHEET 1 OF 1

STATE	COUNTY	DRAWN BY: ENF	CHECKED BY: DG	
TEXAS	CAMERON	PROJECT NO. IBM09T0018		SHEET NO.
REHABILITATION OF ARROYO COLORADO NORTH LEVEE (WILLACY CANAL TO WHITE RANCH ROAD)				14.01

N:\Project\U450\U045917\800Working\Files\Dgn\ADDENDUM1\GOA\U45917SEPIEIC01.dgn