BID ALTERNATE NO. 1
WEATHERING STEEL BEAMS/ GLU-LAM DECK
SUMMARY OF ESTIMATED QUANTITIES

ITEM NO.	ITEM DESCRIPTION	MEASUREMENT		N.F. SPRUCE CREEK BRIDGE NO. 373-14.4
		METHOD	UNIT	
15101(A)	MOBILIZATION	LSQ	Lump Sum	1
15221(A)	CONSTRUCTION SURVEYING AND STAKING	LSQ	Lump Sum	1
15713(A)	SOIL EROSION AND POLLUTION CONTROL	LSQ	Lump Sum	1
15722(A)	STRAW WATTLE	DQ	Lineal Foot	330
20102(A)	CLEARING AND GRUBBING	LSQ	Lump Sum	1
20304(A)	REMOVAL OF EXISTING TIMBER BRIDGE	LSQ	Lump Sum	1
20404(A)	ROADWAY EXCAVATION	DQ	Cubic Yard	50
20420(A)	DRAINAGE EXCAVATION, TYPE II, DRAIN DIP	AQ	Each	1
20806(A)	STRUCTURE EXCAVATION	LSQ	Lump Sum	1
25101(A)	PLACED RIPRAP, CLASS 5 MACHINE PLACED (GOVERNMENT SOURCE)	AQ	Cubic Yard	90
30111(A)	CRUSHED AGGREGATE, SURFACING (GOVERNMENT SOURCE)	DQ	Cubic Yard	51
553A01(A)	PRECAST CONCRETE MEMBER, GRADE BEAM	AQ	Each	2
553A01(B)	PRECAST CONCRETE MEMBER, BACKWALL	AQ	Each	2
55501	STRUCTURAL STEEL BEAMS, FURNISHED, FABRICATED, AND ERECTED	DQ	Pound	41,500
55703	TREATED STRUCTURAL TIMBER & LUMBER, RUNNING PLANK	DQ	MBF	3.47
55705(A)	TREATED STRUCTURAL TIMBER, GLUED LAMINATED, DECK PANELS	DQ	MBF	6.89
55705(B)	TREATED STRUCTURAL TIMBER, GLUED LAMINATED, CURB	DQ	MBF	1.49
62201(A)	EQUIPMENT RENTAL, HYDRAULIC EXCAVATOR WITH THUMB	AQ	Hour	8
62202(A)	EQUIPMENT RENTAL, LARGE DUMP TRUCK	AQ	Hour	8
62503(A)	SEEDING, DRY METHOD	LSQ	Lump Sum	1
62509(A)	MULCHING, DRY METHOD	LSQ	Lump Sum	1
62601(A)	CLUMP PLANTED VEGETATION (ALDERS, WILLOWS, ETC.)	AQ	Each	20
63305(A)	WOOD POSTS	AQ	Lineal Foot	36
63306(A)	OBJECT MARKERS	AQ	Each	4
64810(A)	ROCK WEIR STEP POOL	AQ	Each	5

DQ = Design Quantity; AQ= Actual Quantity

GENERAL NOTES:

DESIGN: This structure is designed for HL-93 loading in accordance with AASHTO LRFD Bridge Design Specifications, 4th edition, 2007.

HYDROLOGY AND HYDRAULICS: This structure is designed to pass a 100-year frequency flood with a stage elevation at 4487.7 (Freeboard is 7.9' at upstream edge of bridge.)

SPECIFICATIONS: Construct the project in compliance with Federal Highway Administration Standard Specifications for Construction of Road and Bridges on Federal Highway Projects (FP-03) and applicable Special Project Specifications.

EROSION CONTROL PLAN: Submit a soil erosion plan to the Contracting Officer and have it approved prior to beginning any work. Provide methods to minimize disturbance to the streambed and to prevent runoff from the construction site from entering directly into the stream. Construct temporary means to divert the flow of the live stream as necessary to perform work. Do not pump water from excavations directly into the live stream.

DISPOSAL: All materials designated for removal become the property of the Contractor and are to be disposed of by removing from site in an environmentally safe manner in accordance with all Local, State and Federal requirements.

TEMPORARY TRAFFIC CONTROL: Submit a Temporary Traffic Control Plan to the Contracting Officer for review prior to construction.

CONCRETE: Use Class A(AE) Precast concrete, F'c = 4000 psi at 28 days with an entrained air content of 5% ± 1%. Finish all precast elements with a Class 2- Rubbed Finish.

Make all concrete in accordance with an approved mix design. Chamfer all exposed edges of concrete and fillet all re-entrant angles 3/4" unless otherwise noted.

REINFORCING STEEL: Use non-prestressed reinforcing of the deformed type conforming to AASHTO M31 (ASTM A615), Grade 60. Concrete cover shall be as shown; where not shown it shall conform to AASHTO. Cut and bend steel in accordance with ACI 315.

HARDWARE AND STRUCTURAL STEEL: Use shapes, plates and bars meeting the requirements of AASHTO M270, Grade 50W, unless otherwise specified in these plans. Use hardware meeting the requirements of ASTM A325, Type 3, except as noted in the drawings.

Weld in accordance with the Bridge Welding Code, AWS D1.5.

RUNNING PLANK: Use treated running plank of rough sawn Western Larch or Coastal Region Douglas Fir No. 2 Grade or Better conforming to current WWPA Grading Rules for Western Lumber or current WCLIB Standard Grading Rules for West Coast Lumber.

GLUED LAMINATED (GLU-LAM) MEMBERS: Furnish glued laminated Deck Panels, Curb and Curb Blocks of Coast Region Douglas Fir conforming to American Institute of Timber Construction (AITC) 117. Use members manufactured for wet condition use and industrial appearance grade meeting the Axial Combinations Identification No. 3, 4 or 5.

TREATMENT: After fabrication incise and pressure treat all lumber in accordance with AWPA C-28, above ground use, for glued laminates and AWPA C-2, soil and fresh water use for solid sawn members using pentachlorophenal meeting AWPA P-8 using AWPA P-9 Type A solvent. Penetration requirements are specified in AWPA.

FIELD TREATMENT: Furnish Copper naphthenate (2% solution) for field treating of wood. Carefully trim and give three brush coats of the field treatment solution to all abrasions and cuts made in the field. Pour perservative in all holes drilled in the field. Pour perservative in unused holes and plug with tight fitting, treated, hardwood dowels.

INSPECTION and CERTIFICATION: Furnish the following compliance certificates upon delivery:

A. Supplier certification, from a WWPA or WCLIB approved supplier, that all wood materials meet the requirements as to species and grade.
B. Certification of perservative, penetration in inches, and retention in pounds per cubic foot (assay method) by either a qualified testing and inspection agency or supplier certification. Supplier certification requires each solid piece to be stamped or branded with the ALSC quality mark.
C. Certification from a qualified inspection and testing agency indicating conformance of all glue laminated members with AITC 117-93.
D. Supplier certification that all treated wood materials were treated in conformance with and meet the requirements of WWPI's Best Management Practices for the Use of Treated Wood in Aquatic Enviornments.

TIMBER FABRICATION: Submit Shop drawings for all timber. Show all dimensions and fabrication details for all cut or bored timbers. Mark all pieces with the Piece Mark shown on the DRAWINGS, such as B1, S1, etc. Do not field drill holes unless shown on the DRAWINGS.

FOREST SERVICE U.S. DEPARTMENT OF AGRICULTURE

REGION ONE

BY	DATE	REVISION DESCRIPTION

DESIGN CT PROJ. NO. 5380.01
DRAWN CT DATE MAR 08
CHECKED MJ SURVEYED DJ&A

DJ&A, P.C.
CONSULTING ENGINEERS & LAND SURVEYORS
3203 Russell Street, Missoula, Montana 59801-8591
Phone 406/721-4320 Fax 406/549-6371

USFS - CLEARWATER N.F.
NORTH FORK SPRUCE CREEK
BRIDGE REPLACEMENT

BID ALTERNATE NO. 1
SUMMARY OF QUANTITIES
AND GENERAL NOTES

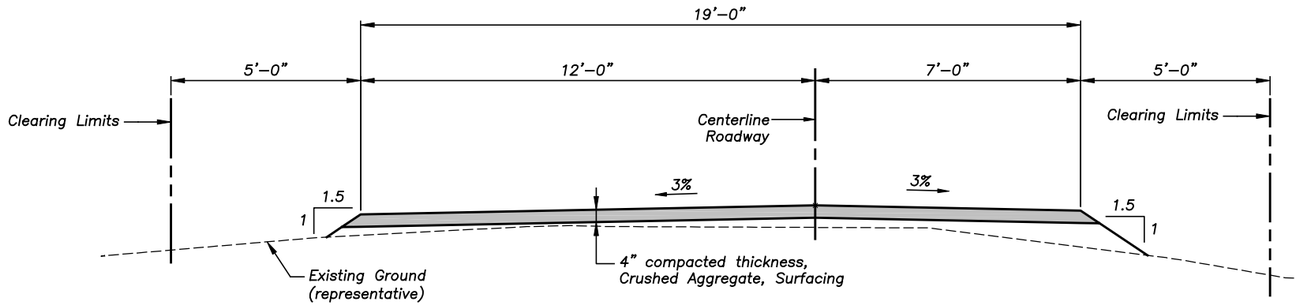

STA 4+00 TO BRIDGE

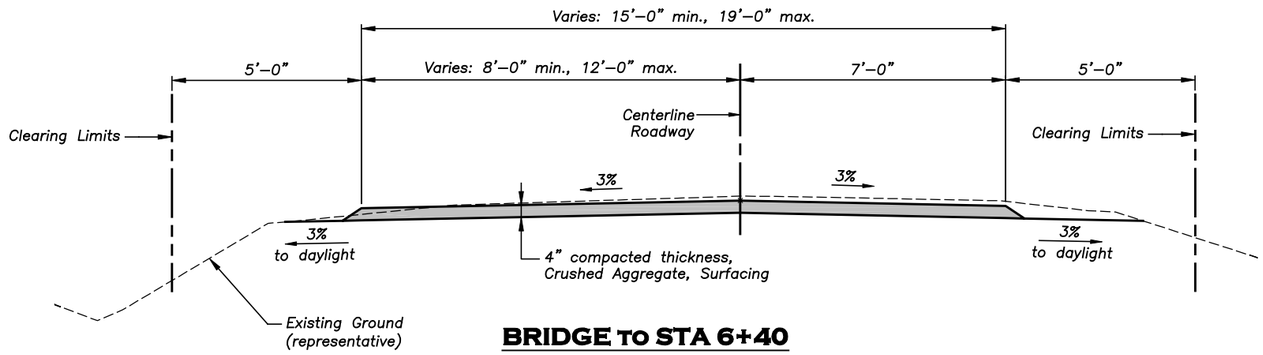

BRIDGE TO STA 6+40

TYPICAL SECTIONS

Scale: 1/4" = 1'

ROADWAY CENTERLINE COORDINATE TABLE				
Point	Northing	Easting	Elevation	Description
800	9881.6150	10061.1609	4498.52	Sta. 4+00
801	9901.4800	10058.8415	4498.72	Sta. 4+20
802	9921.1693	10055.4977	4498.92	Sta. 4+40
803	9939.5232	10047.6839	4499.12	Sta. 4+60
804	9955.3733	10035.5722	4499.32	Sta. 4+80
805	9959.3238	10031.4092	4499.32	Sta. 4+85.74 ℄ Brg. Abutment 1
806	10002.0250	9984.4107	4499.32	Sta. 5+49.24 ℄ Brg. Abutment 2
807	10009.2606	9976.4468	4499.37	Sta. 5+60
808	10022.7098	9961.6442	4499.73	Sta. 5+80
809	10036.1590	9946.8415	4500.28	Sta. 6+00
810	10049.6082	9932.0388	4501.04	Sta. 6+20
811	10063.0574	9917.2361	4501.99	Sta. 6+40
812	10076.4150	9902.3512	4503.15	Sta. 6+60
813	10089.3917	9887.1334	4504.28	Sta. 6+80
814	10101.9580	9871.5750	4505.31	Sta. 7+00

FOREST SERVICE U S DEPARTMENT OF AGRICULTURE

REGION ONE

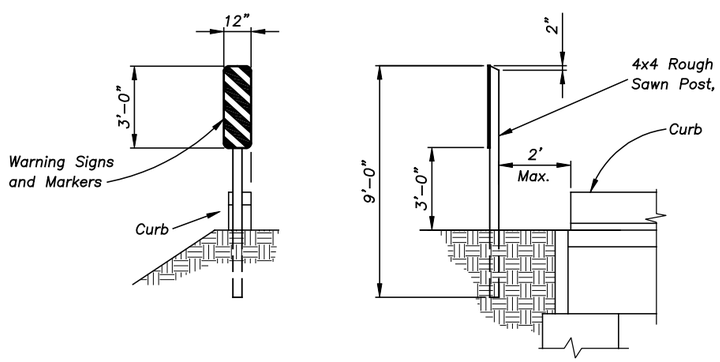

OBJECT MARKERS: Use 12"x 36" Type 3 object markers colored yellow and black. Use material meeting MUTCD OM–3L or OM–3R specifications. Fasten to post w/ (2) 1/4" ø machine bolts w/ washers. Field drill bolt holes. Install posts such that the inside edge of the reflectorized panel is on line with the inside edge of the curb.

OBJECT MARKER TYPE 3

Not to Scale

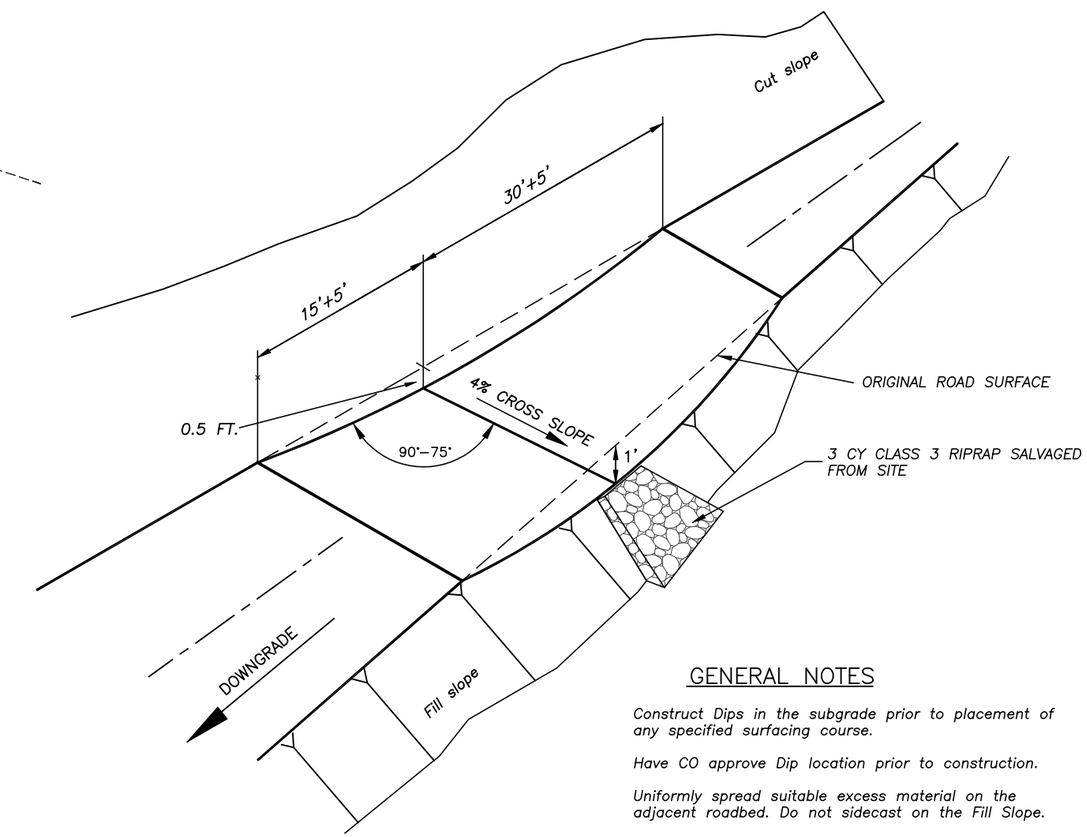

GENERAL NOTES

Construct Dips in the subgrade prior to placement of any specified surfacing course.

Have CO approve Dip location prior to construction.

Uniformly spread suitable excess material on the adjacent roadbed. Do not sidecast on the Fill Slope.

DRAIN DIP DETAIL

BY	DATE	REVISION DESCRIPTION

DESIGN CT PROJ. NO. 5380.01
DRAWN CT DATE MAR 08
CHECKED MJ SURVEYED DJ&A

DJ&A, P.C.
CONSULTING ENGINEERS & LAND SURVEYORS
3203 Russell Street, Missoula, Montana 59801-8591
Phone 406/721-4320 Fax 406/549-6371

USFS - CLEARWATER N.F.
NORTH FORK SPRUCE CREEK
BRIDGE REPLACEMENT

BID ALTERNATE NO. 1
ROADWAY TYPICAL SECTIONS
AND DETAILS

SURVEY CONTROL COORDINATES

Number	Northing	Easting	Elevation	
CP-1	9759.8988	10101.9169	4498.33	RPC
CP-2	10000.0000	10000.0000	4500.00	NAIL
CP-3	9964.6530	10012.6114	4499.81	NAIL
CP-4	10215.1071	9724.2927	4516.05	RPC
CP-5	10042.0532	9930.4897	4500.79	NAIL
CP-6	9902.9964	10044.1497	4498.01	NAIL

CP–4 not visible in drawing. It is located at ±Sta. 8+90 off right edge of road

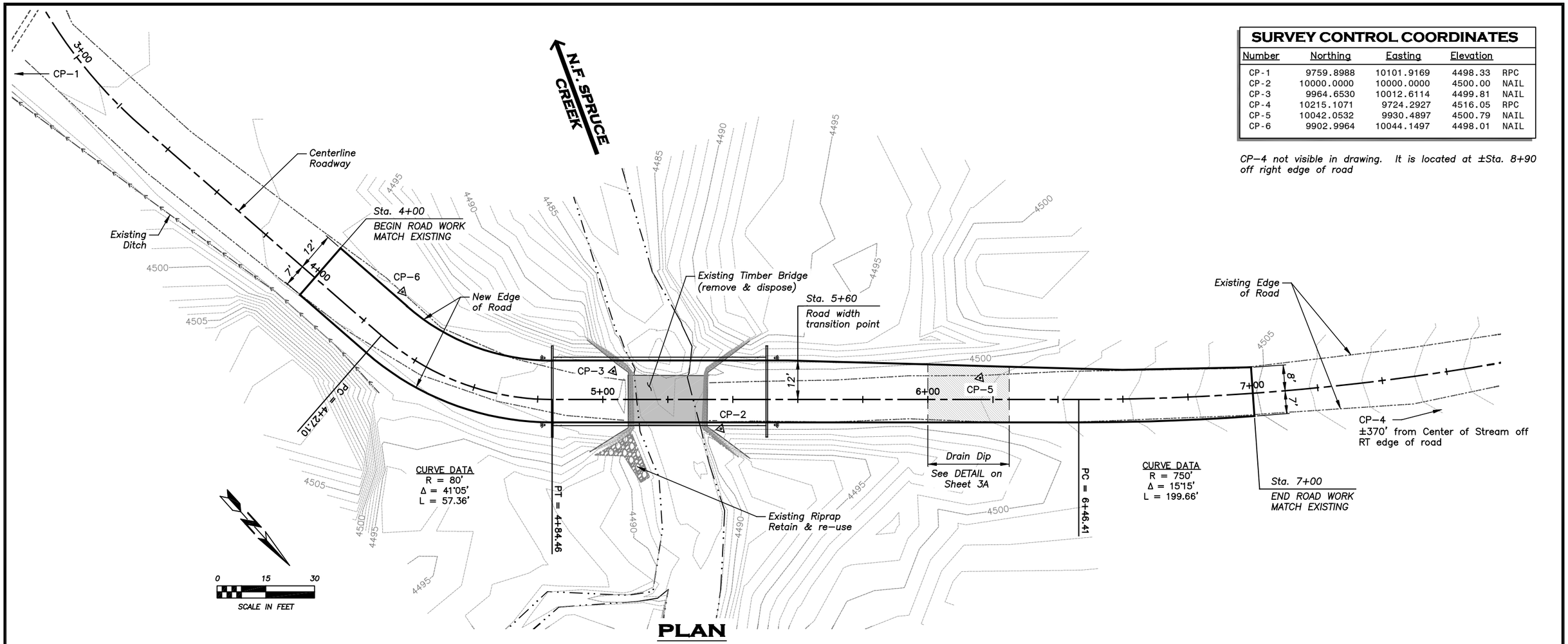

PLAN

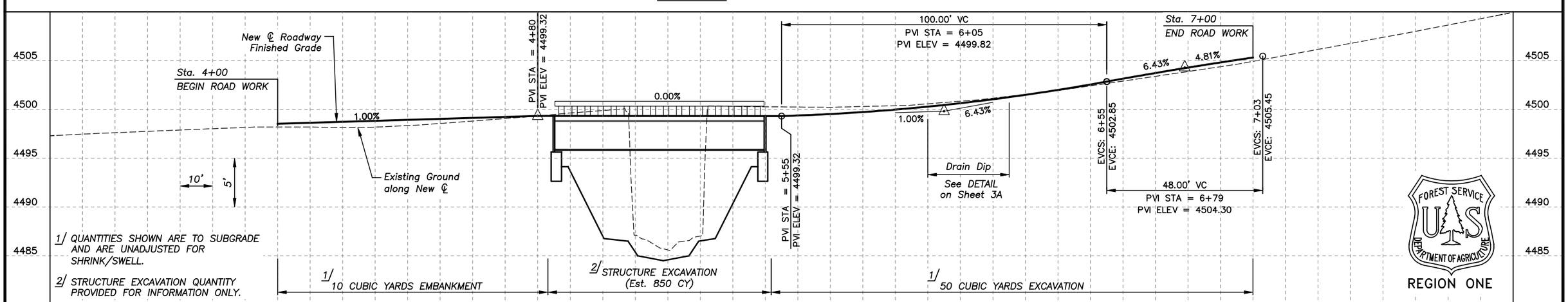

FOREST SERVICE U.S. DEPARTMENT OF AGRICULTURE
REGION ONE

BY	DATE	REVISION DESCRIPTION

DESIGN CT PROJ. NO. 5380.01
DRAWN CT DATE MAR 08
CHECKED MJ SURVEYED DJ&A

DJ&A, P.C.
CONSULTING ENGINEERS & LAND SURVEYORS
3203 Russell Street, Missoula, Montana 59801-8591
Phone 406/721-4320 Fax 406/549-6371

USFS - CLEARWATER N.F.
NORTH FORK SPRUCE CREEK
BRIDGE REPLACEMENT

BID ALTERNATE NO. 1
ROADWAY PLAN & PROFILE

SHEET 4A OF 14A

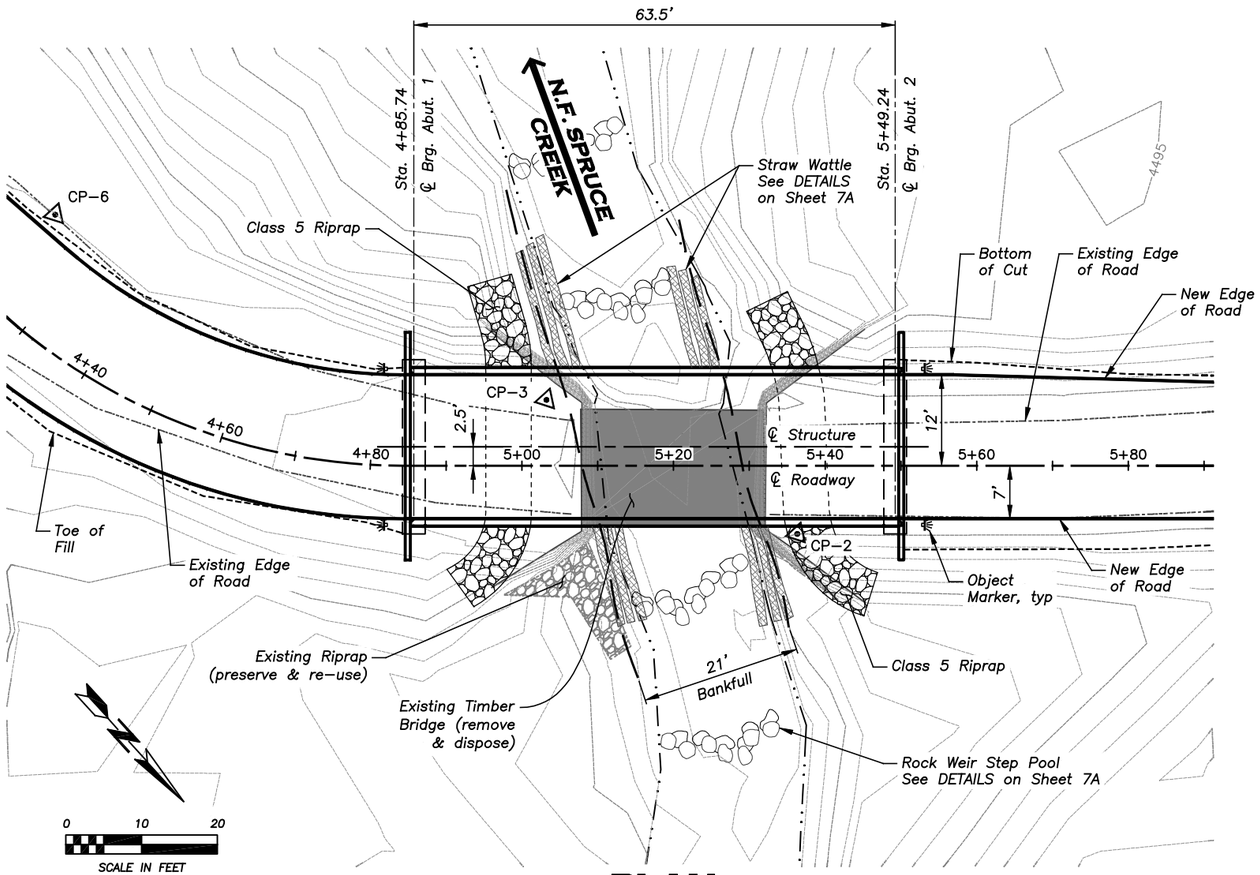

PLAN

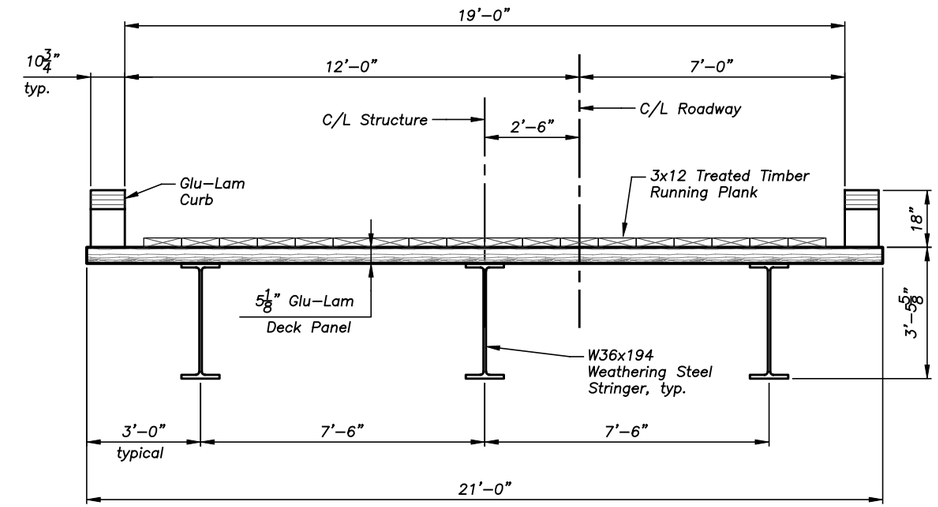

TYPICAL SECTION

Scale: 1/4" = 1'

NOTE:

Neat line Riprap dimensions shown are used to show general limits of Riprap and estimate quantities. Actual dimensions will vary.

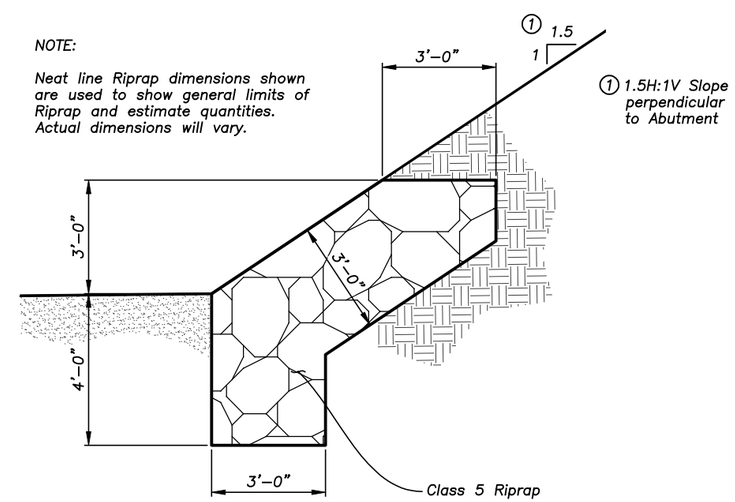

RIPRAP DETAIL

Not to Scale

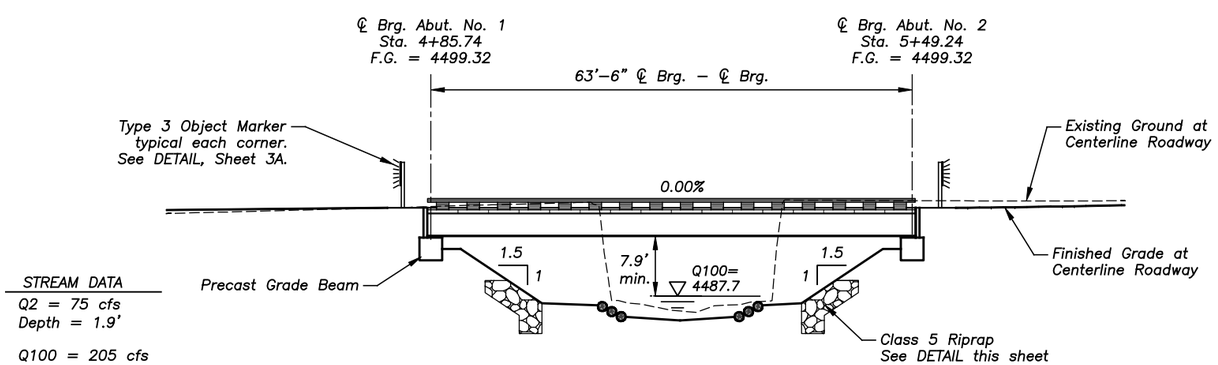

STREAM DATA

Q2 = 75 cfs
Depth = 1.9'

Q100 = 205 cfs
Depth = 2.5'

ELEVATION

Scale: 1" = 10'

FOREST SERVICE
U S
DEPARTMENT OF AGRICULTURE

REGION ONE

BY	DATE	REVISION DESCRIPTION

DESIGN CT PROJ. NO. 5380.01
DRAWN CT DATE MAR 08
CHECKED MJ SURVEYED DJ&A

DJ&A, P.C.
CONSULTING ENGINEERS & LAND SURVEYORS
3203 Russell Street, Missoula, Montana 59801-8591
Phone 406/721-4320 Fax 406/549-6371

USFS - CLEARWATER N.F.
NORTH FORK SPRUCE CREEK
BRIDGE REPLACEMENT

BID ALTERNATE NO. 1
BRIDGE GENERAL LAYOUT

SHEET 5A OF 14A

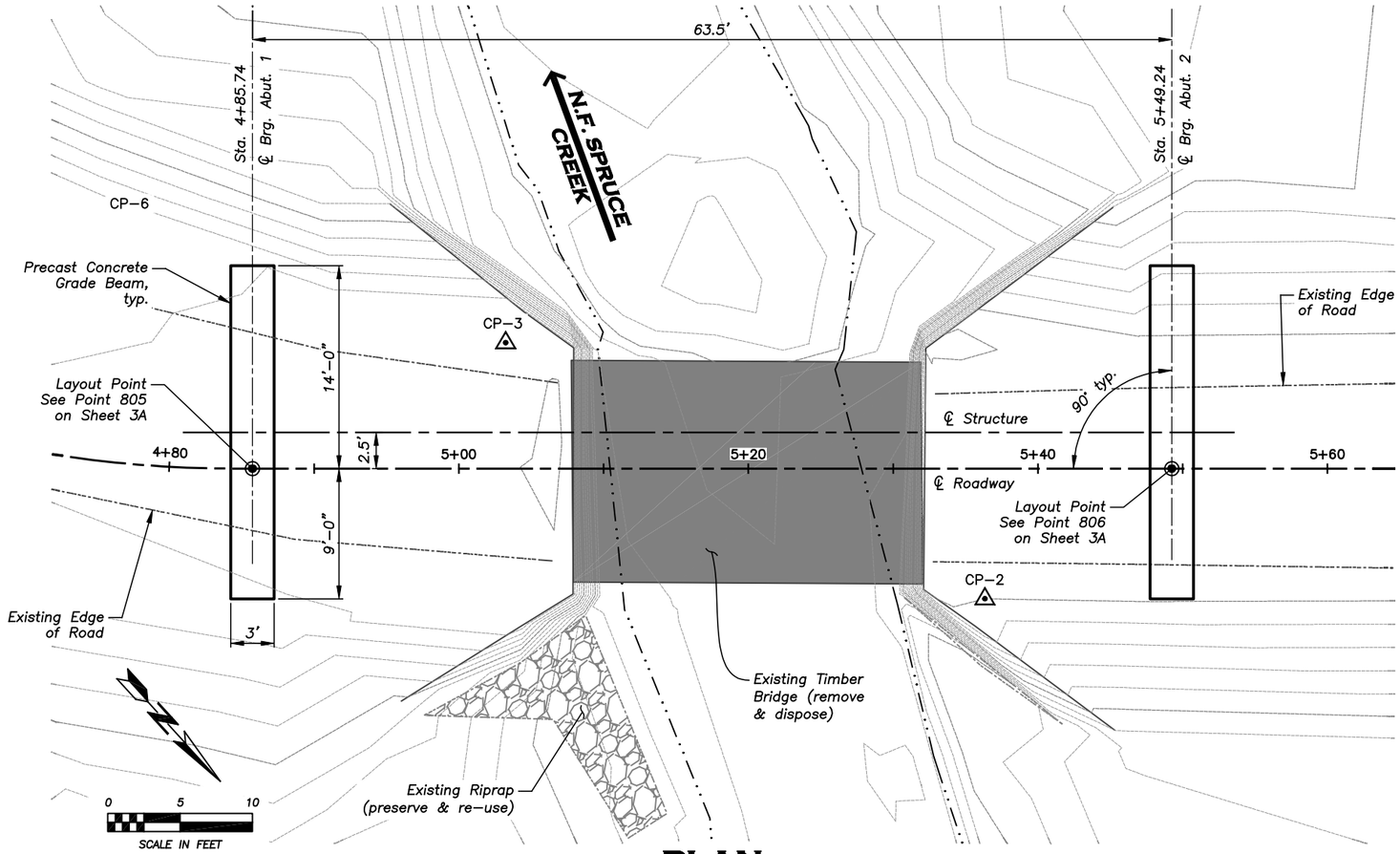

PLAN

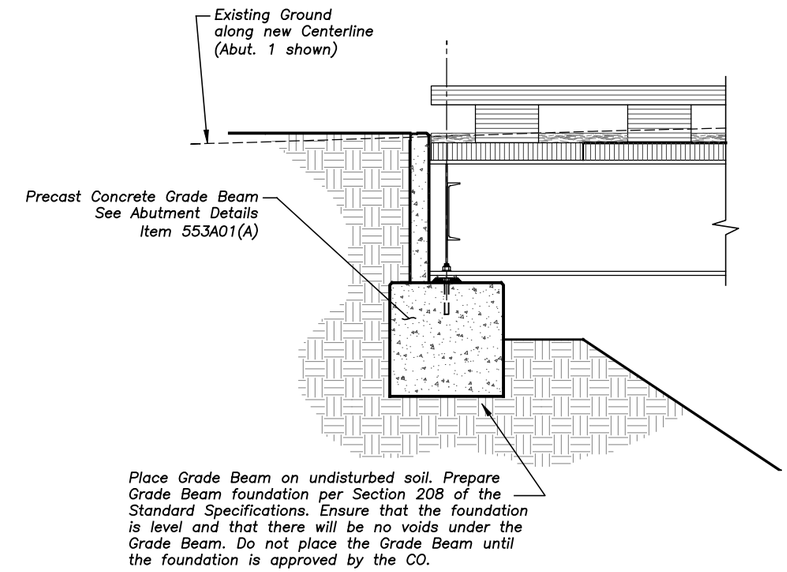

TYPICAL SECTION

Scale: 1/4" = 1'

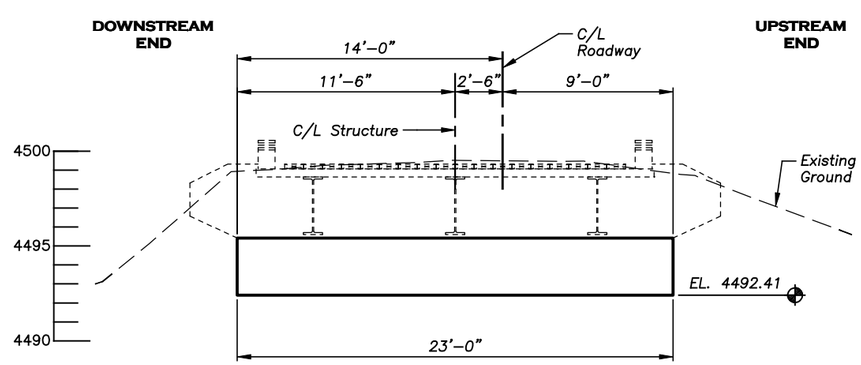

ABUTMENT 1

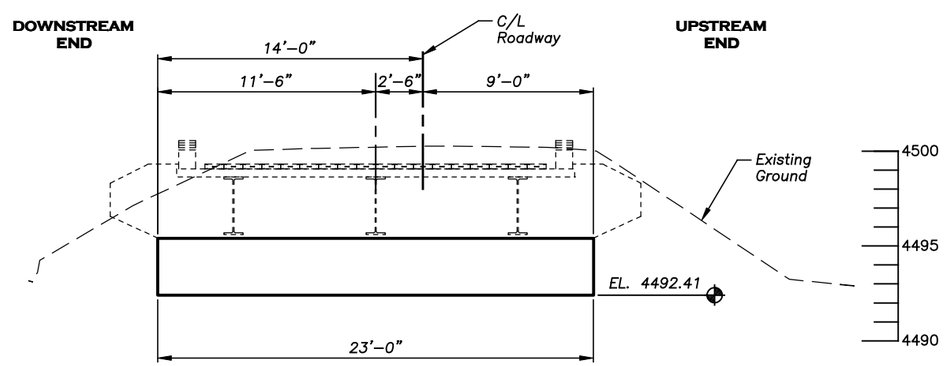

ABUTMENT 2

SECTIONS ALONG C/L BEARING (Looking Ahead On–Line)

Scale: 1/8" = 1'

FOREST SERVICE U.S. DEPARTMENT OF AGRICULTURE

REGION ONE

BY	DATE	REVISION DESCRIPTION

DESIGN CT PROJ. NO. 5380.01
DRAWN CT DATE MAR 08
CHECKED MJ SURVEYED DJ&A

DJ&A, P.C.
CONSULTING ENGINEERS & LAND SURVEYORS
3203 Russell Street, Missoula, Montana 59801-8591
Phone 406/721-4320 Fax 406/549-6371

USFS - CLEARWATER N.F.
NORTH FORK SPRUCE CREEK
BRIDGE REPLACEMENT

BID ALTERNATE NO. 1
FOUNDATION PLAN

SHEET 6A OF 14A

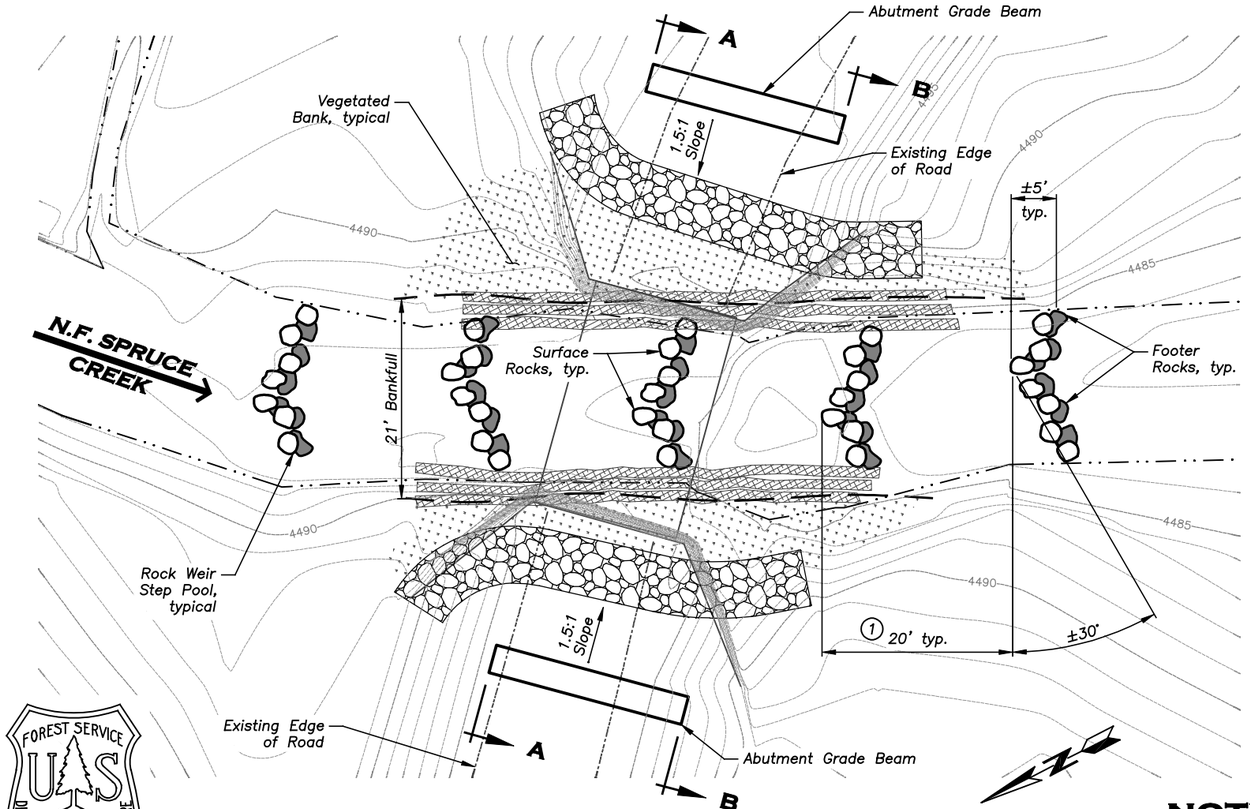

PLAN

Not to Scale

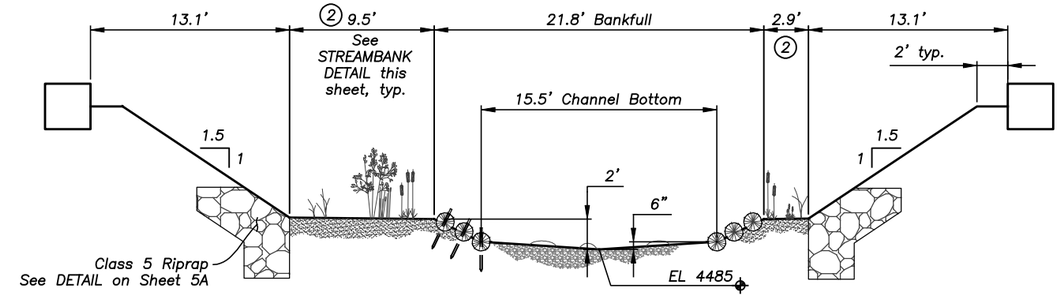

UPSTREAM CHANNEL SECTION A-A

Not to Scale

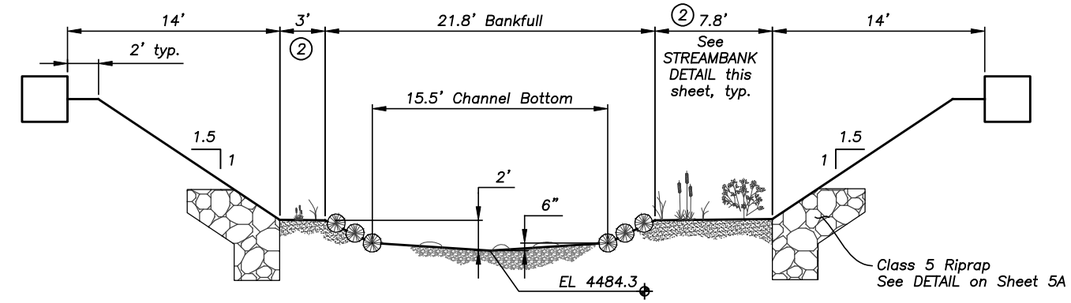

DOWNSTREAM CHANNEL SECTION B-B

Not to Scale

FOREST SERVICE U S DEPARTMENT OF AGRICULTURE

REGION ONE

NOTES

1. SPACING AND CONFIGURATION MAY BE ADJUSTED IN THE FIELD BY THE CO TO FIT ACTUAL STREAMBED CONDITIONS
2. DIMENSION OF VEGETATED BANK VARIES– DIMENSIONS SHOWN APPLY AT SECTION A–A AND SECTION B–B ONLY.

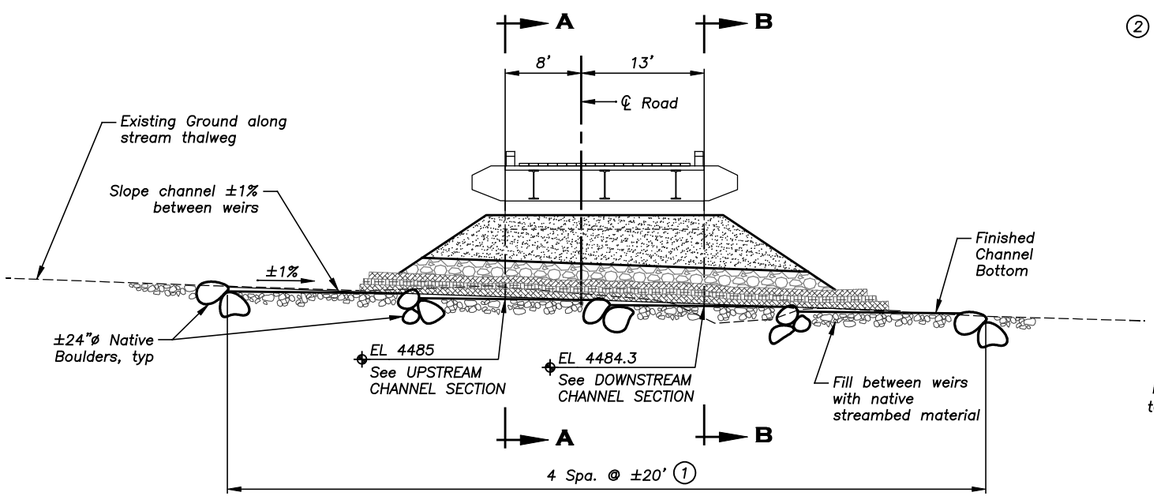

STREAM ELEVATION

Not to Scale

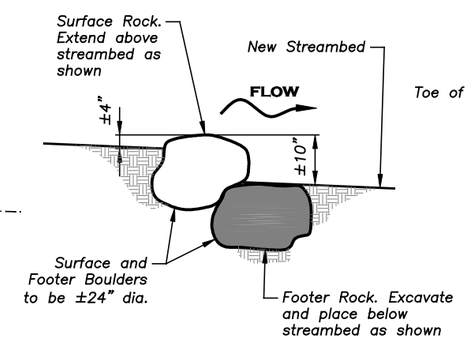

ROCK WEIR DETAIL

Not to Scale

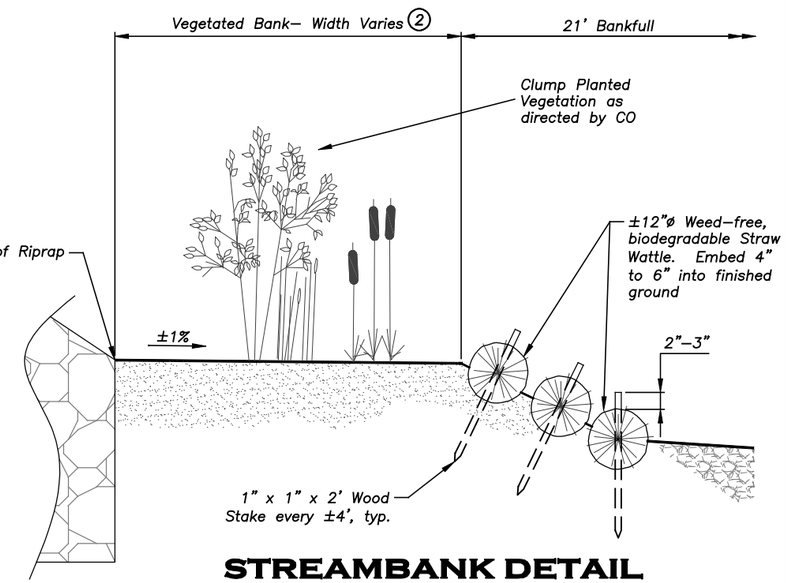

STREAMBANK DETAIL

Not to Scale

BY	DATE	REVISION DESCRIPTION

DESIGN	CT	PROJ. NO.	5380.01
DRAWN	CT	DATE	MAR 08
CHECKED	MJ	SURVEYED	DJ&A

DJ&A, P.C.
CONSULTING ENGINEERS & LAND SURVEYORS
3203 Russell Street, Missoula, Montana 59801-6591
Phone 406/721-4320 Fax 406/549-6371

USFS - CLEARWATER N.F.
NORTH FORK SPRUCE CREEK
BRIDGE REPLACEMENT

BID ALTERNATE NO. 1
STREAM DETAILS

SHEET 7A OF 14A

REGION ONE

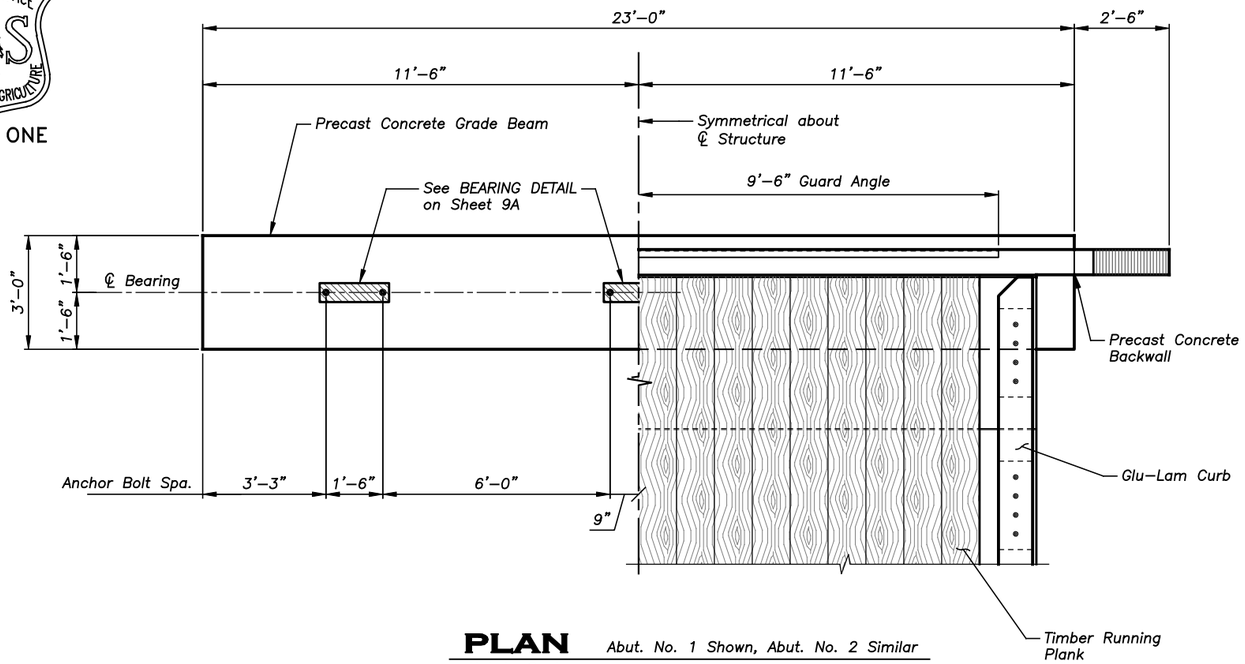

PLAN Abut. No. 1 Shown, Abut. No. 2 Similar

Not to Scale

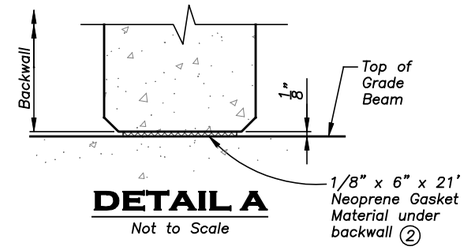

DETAIL A

Not to Scale

NOTES:

(1) Geotextile, Type II–A full width of bridge. Incidental to Item 553A01A

(2) Neoprene gasket material incidental to Item 553A01B

(3) Use Neoprene Compression Seal (Pavement Seal) meeting the requirements of ASTM D2628. Use a seal with a 1" nominal width. Install per manufacturer's recommendations using a lubricant adhesive. (Incidental to Item 553A01B)

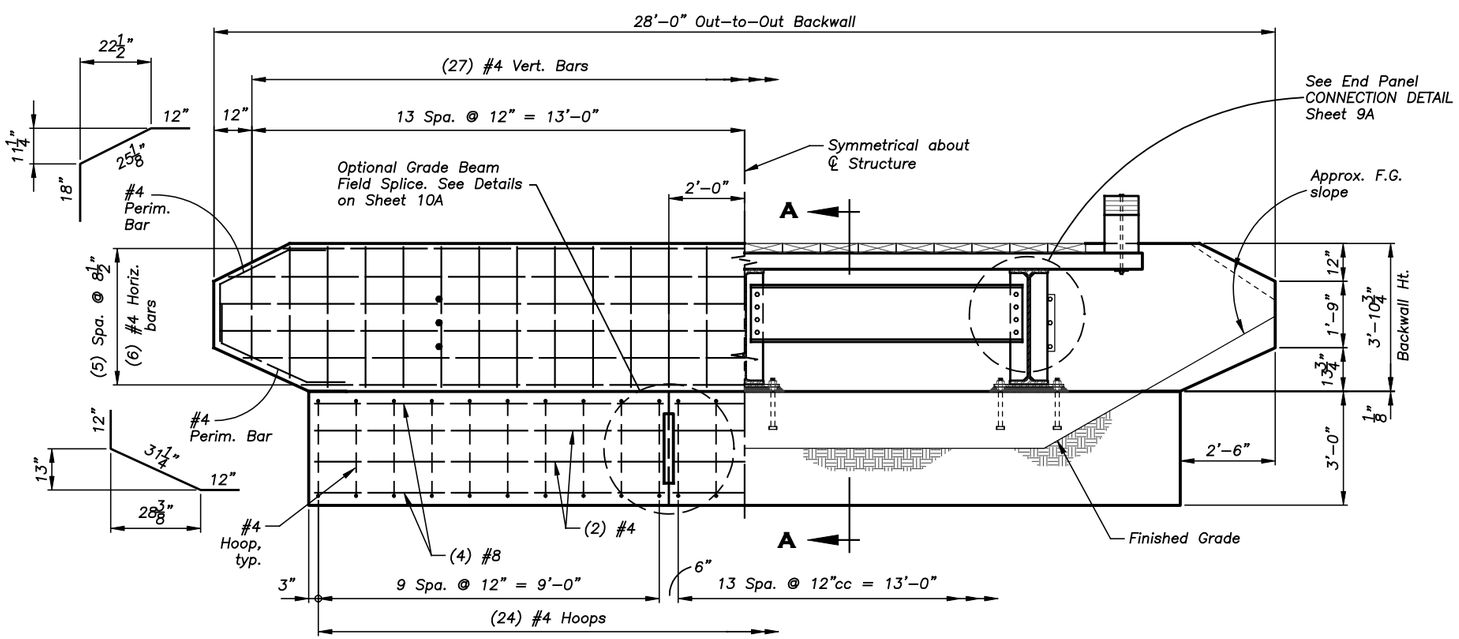

ELEVATION LOOKING BACK ON–LINE

Not to Scale Abut. No. 1 Shown, Abut. No. 2 Similar

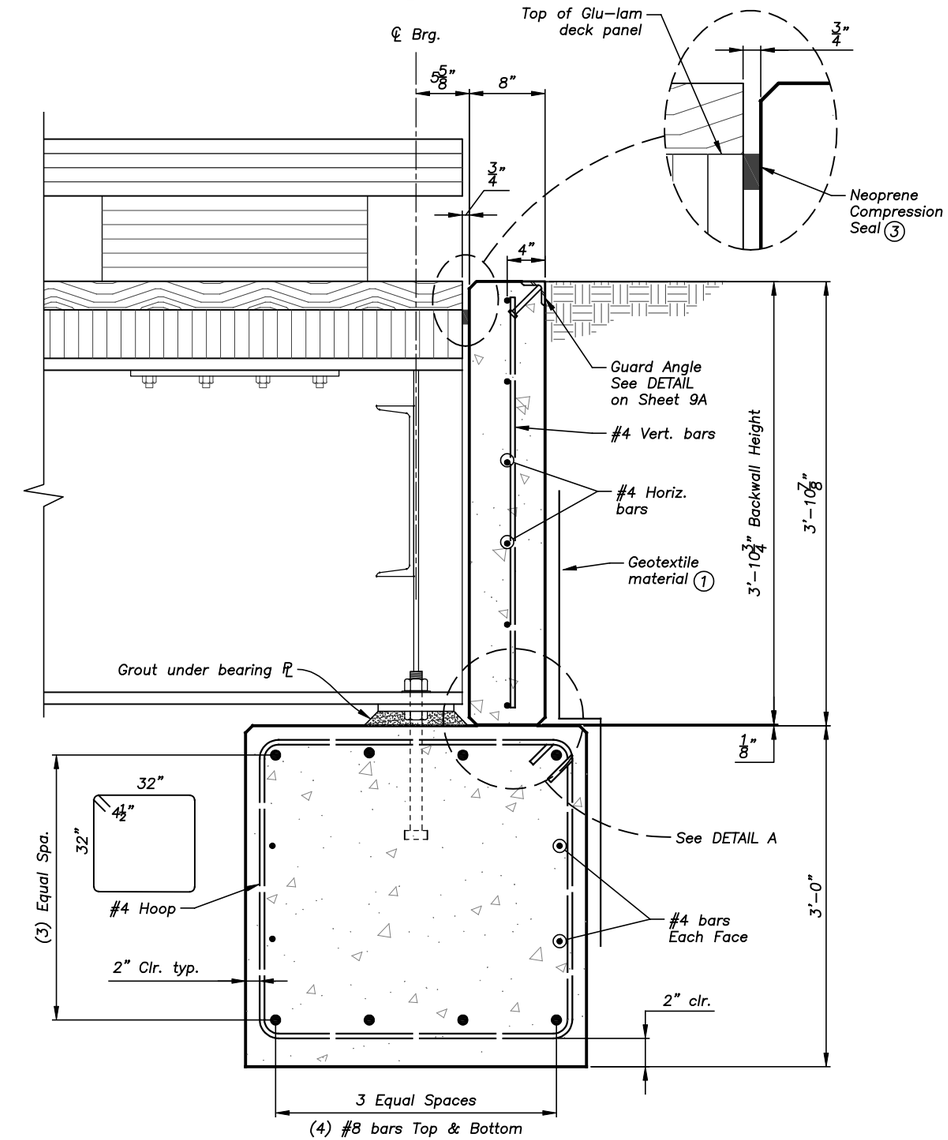

SECTION A-A

Scale: 1–1/2" = 1'

BY	DATE	REVISION DESCRIPTION

DESIGN CT PROJ. NO. 5380.01
DRAWN CT DATE MAR 08
CHECKED MJ SURVEYED DJ&A

DJ&A, P.C.
CONSULTING ENGINEERS & LAND SURVEYORS
3203 Russell Street, Missoula, Montana 59801-8091
Phone 406/721-4320 Fax 406/549-6371

USFS - CLEARWATER N.F.
NORTH FORK SPRUCE CREEK
BRIDGE REPLACEMENT

BID ALTERNATE NO. 1
ABUTMENT PLAN & ELEVATION

SHEET 8A OF 14A

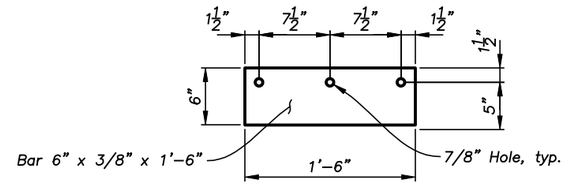

CLAMP PLATE

Not to Scale

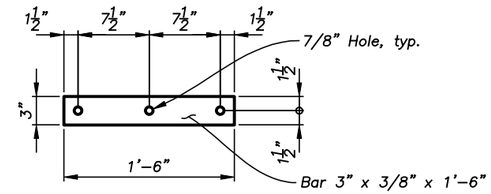

SPACER

Not to Scale

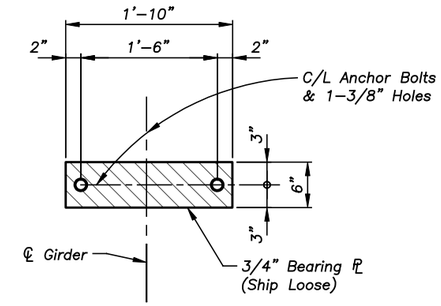

PLAN (PLATE ONLY)

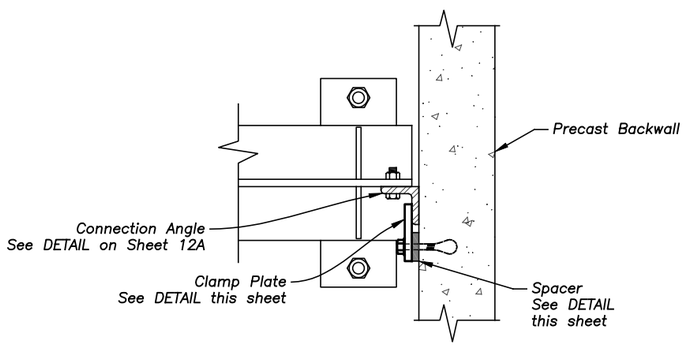

PLAN

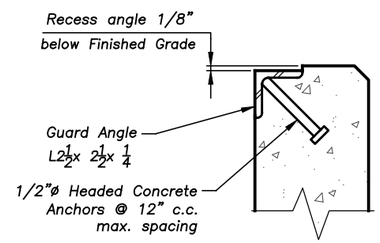

GUARD ANGLE

Not to Scale

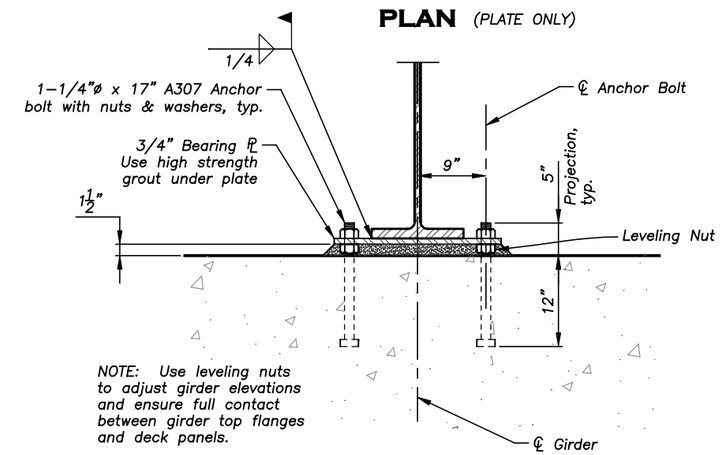

ELEVATION

BEARING DETAIL

Not to Scale

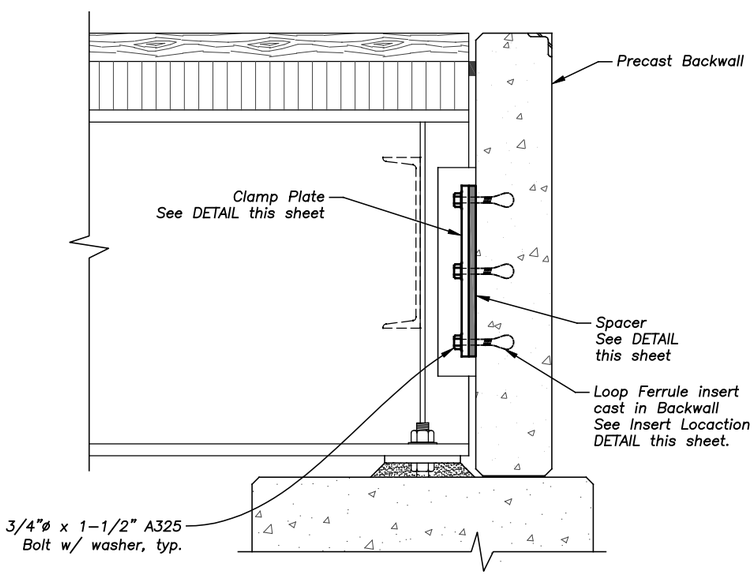

END PANEL CONNECTION DETAIL

Not to Scale

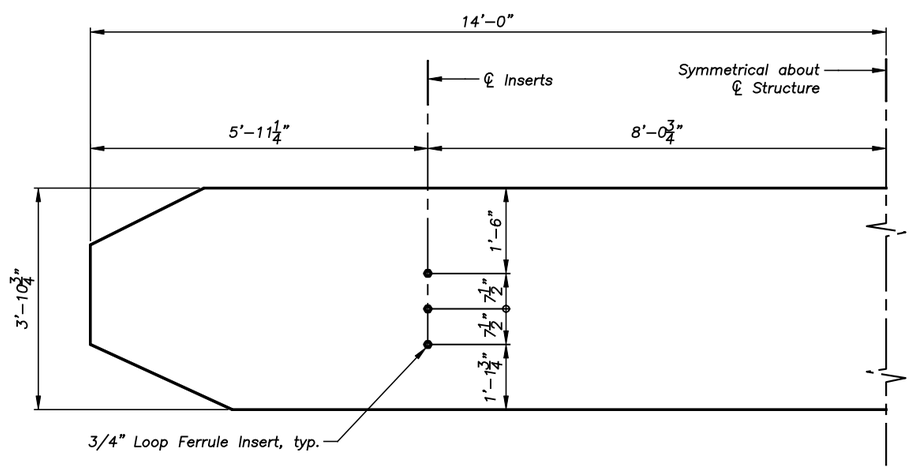

INSERT LOCATIONS

Not to Scale

NOTE:

Connect Precast Concrete Backwall at all exterior Steel Girders only (2 locations each abutment).

FOREST SERVICE
U S
DEPARTMENT OF AGRICULTURE

REGION ONE

BY	DATE	REVISION DESCRIPTION

DESIGN CT PROJ. NO. 5380.01
DRAWN CT DATE MAR 08
CHECKED MJ SURVEYED DJ&A

DJ&A, P.C.
CONSULTING ENGINEERS & LAND SURVEYORS
3203 Russell Street, Missoula, Montana 59801-6591
Phone 406/721-4320 Fax 406/549-6371

USFS - CLEARWATER N.F.
NORTH FORK SPRUCE CREEK
BRIDGE REPLACEMENT

BID ALTERNATE NO. 1
ABUTMENT DETAILS

SHEET 9A OF 14A

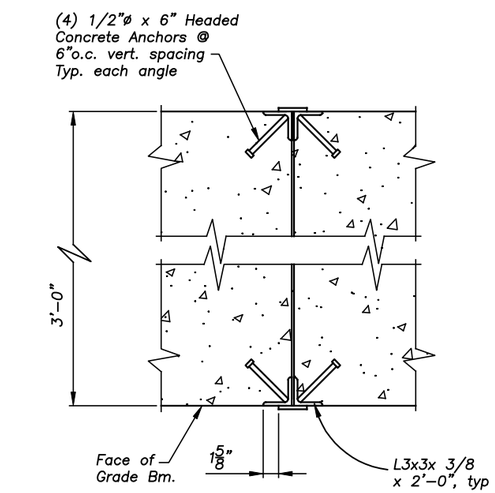

PLAN SECTION

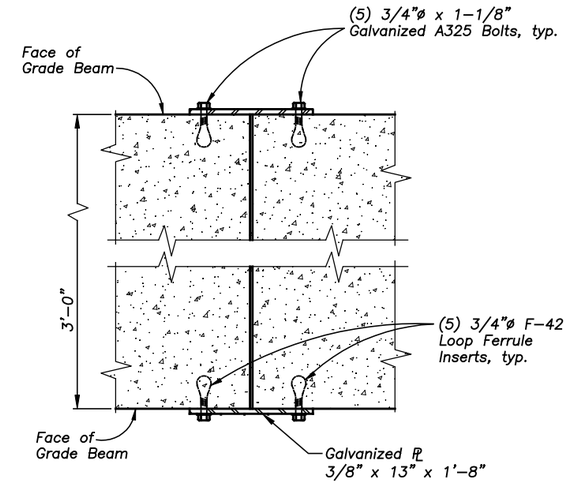

PLAN SECTION B-B

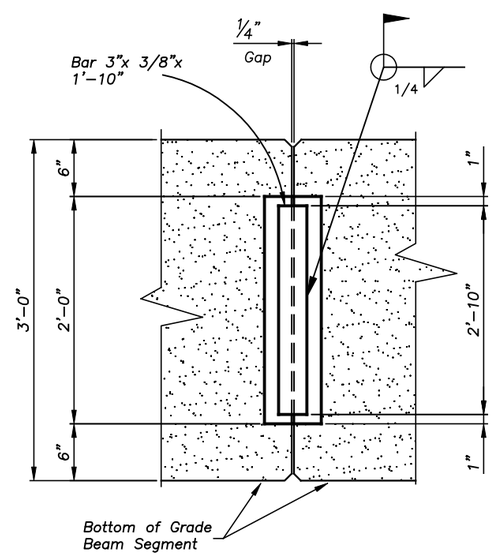

ELEVATION

FIELD WELD ALTERNATE

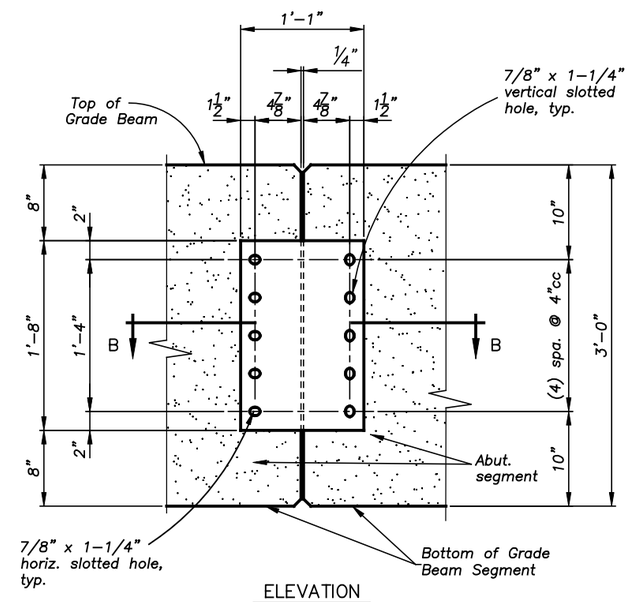

ELEVATION

FIELD BOLT ALTERNATE

OPTIONAL GRADE BEAM SPLICE DETAIL

Scale: 3/4" = 1'-0

FOREST SERVICE U S DEPARTMENT OF AGRICULTURE

REGION ONE

BY	DATE	REVISION DESCRIPTION

DESIGN CT PROJ. NO. 5380.01
DRAWN CT DATE MAR 08
CHECKED MJ SURVEYED DJ&A

DJ&A, P.C.
CONSULTING ENGINEERS & LAND SURVEYORS
3203 Russell Street, Missoula, Montana 59801-8091
Phone 406/721-4320 Fax 406/549-6371

USFS - CLEARWATER N.F.
NORTH FORK SPRUCE CREEK
BRIDGE REPLACEMENT

BID ALTERNATE NO. 1
ABUTMENT GRADE BEAM
OPTIONAL FIELD SPLICE

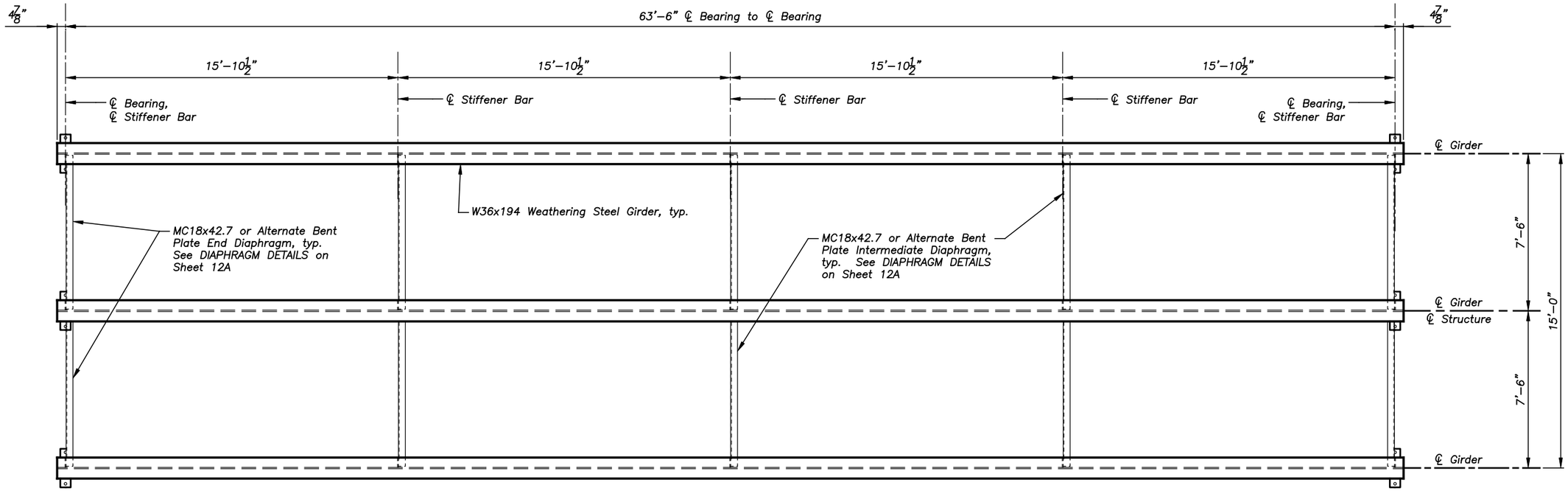

FRAMING PLAN

Scale: 3/16" = 1'

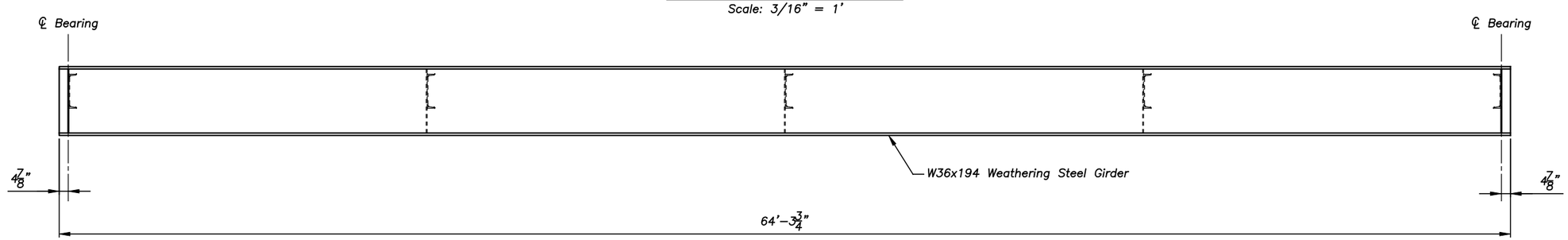

ELEVATION

Scale: 3/16" = 1'

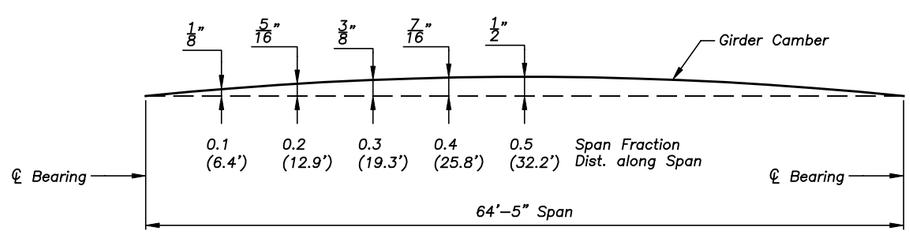

GIRDER CAMBER DIAGRAM

REGION ONE

BY	DATE	REVISION DESCRIPTION

DESIGN CT PROJ. NO. 5380.01
DRAWN CT DATE MAR 08
CHECKED MJ SURVEYED DJ&A

DJ&A, P.C.
CONSULTING ENGINEERS & LAND SURVEYORS
3203 Russell Street, Missoula, Montana 59801-8591
Phone 406/721-4320 Fax 406/549-6371

USFS - CLEARWATER N.F.
NORTH FORK SPRUCE CREEK
BRIDGE REPLACEMENT

BID ALTERNATE NO. 1
STEEL FRAMING PLAN

SHEET 11A OF 14A

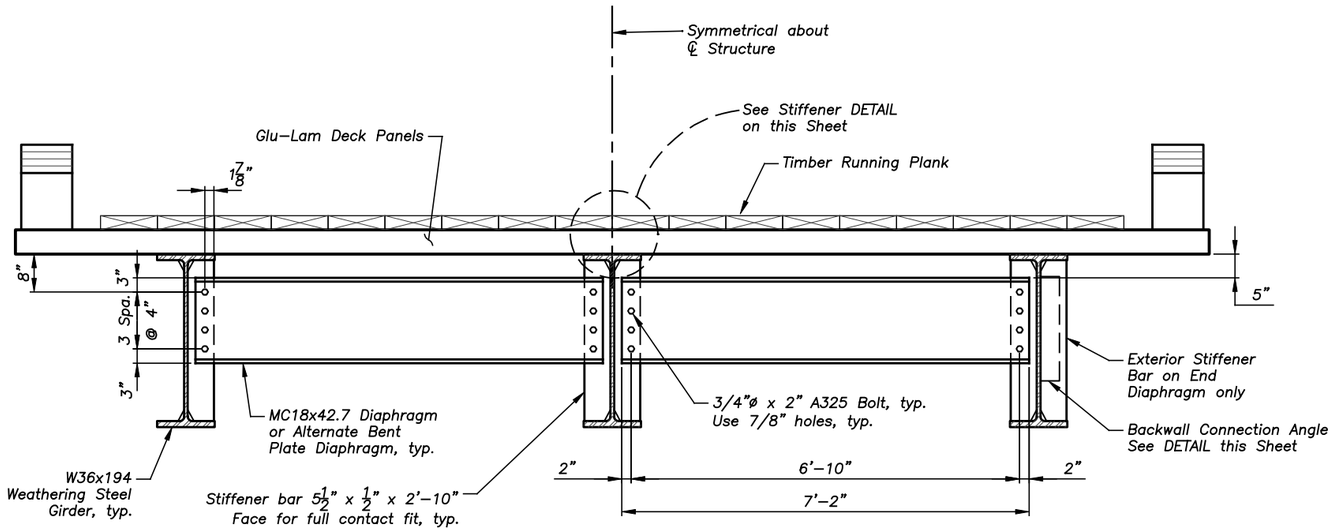

INTERMEDIATE DIAPHRAGM **END DIAPHRAGM**

DIAPHRAGM DETAILS

Scale: 3/8" = 1'–0"

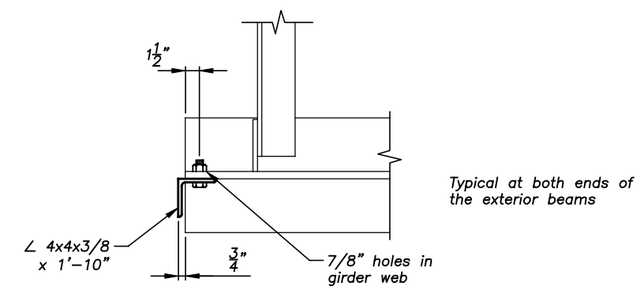

PLAN SECTION

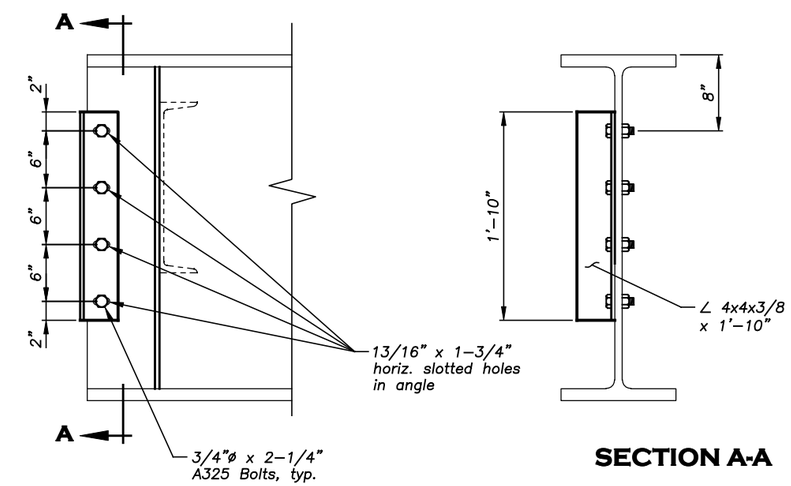

SECTION A-A

BACKWALL CONNECTION ANGLE

Not to Scale

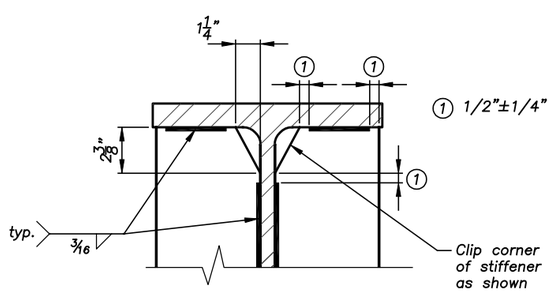

STIFFENER DETAIL

Not to Scale

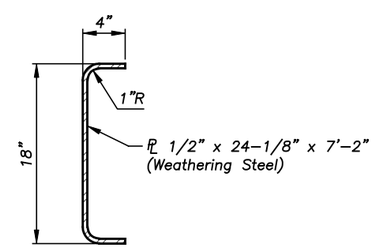

ALTERNATE DIAPHRAGM

Not to Scale

REGION ONE

BY	DATE	REVISION DESCRIPTION

DESIGN CT PROJ. NO. 5380.01
DRAWN CT DATE MAR 08
CHECKED MJ SURVEYED DJ&A

DJ&A, P.C.
CONSULTING ENGINEERS & LAND SURVEYORS
3203 Russell Street, Missoula, Montana 59801-8591
Phone 406/721-4320 Fax 406/549-6371

USFS - CLEARWATER N.F.
NORTH FORK SPRUCE CREEK
BRIDGE REPLACEMENT

BID ALTERNATE NO. 1
STEEL FRAMING DETAILS

SHEET 12A OF 14A

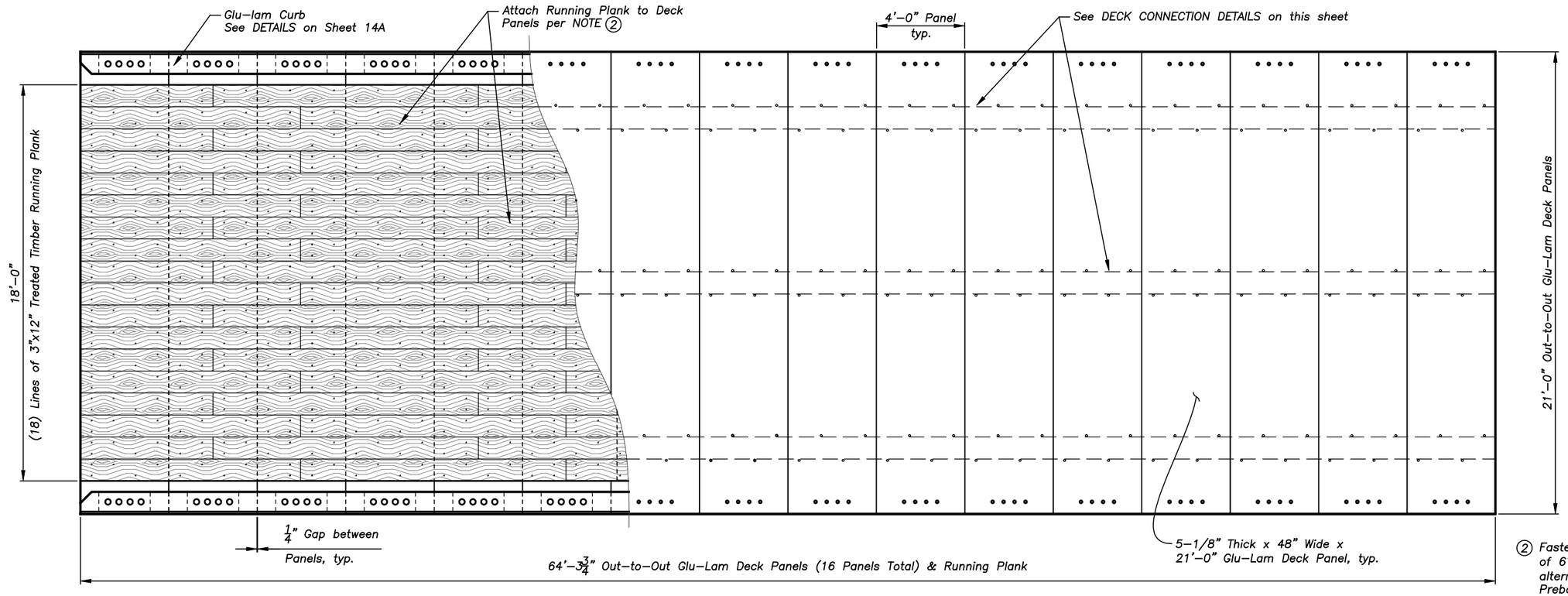

DECK PLAN

Scale: 3/16" = 1'

② Fasten running planks to deck with two rows of 6" ring shank nails per plank @ ±24" alternate centers and (2) at each end. Prebore spike lead hole using a hole equal to 75% of spike diameter. Treat hole with copper naphthenate (2% solution) before placing each spike. Each running plank may be furnished in multiple pieces. Stagger plank splices between runs a minimum of 3 feet.

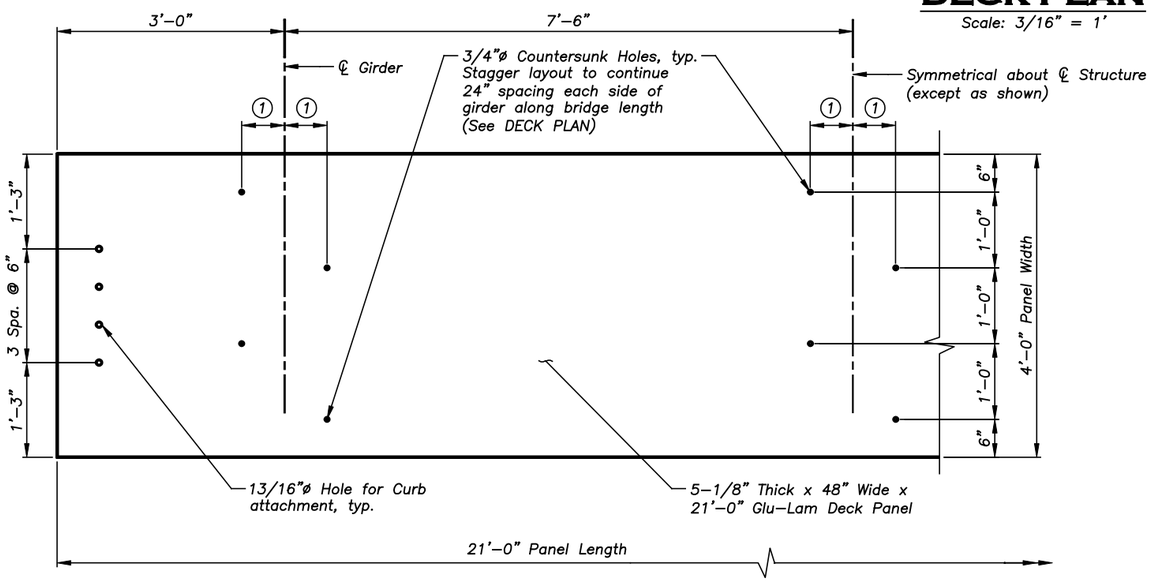

TYPICAL DECK PANEL

Not to Scale

① See DETAILS on this sheet for location of Deck Mounting Holes

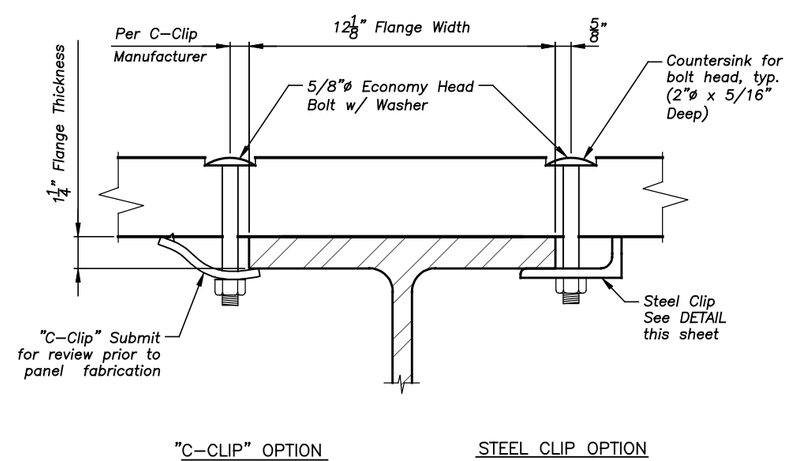

DECK CONNECTION DETAIL

Not to Scale

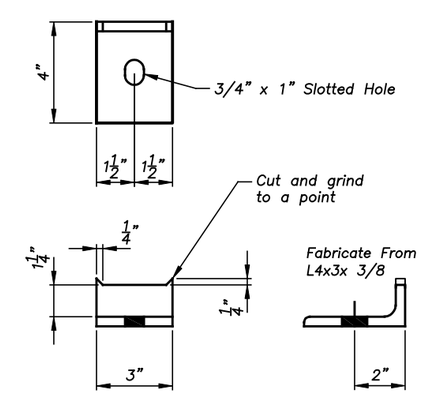

STEEL CLIP

Not to Scale

BY	DATE	REVISION DESCRIPTION

DESIGN CT PROJ. NO. 5380.01
DRAWN CT DATE MAR 08
CHECKED MJ SURVEYED DJ&A

DJ&A, P.C.
CONSULTING ENGINEERS & LAND SURVEYORS
3203 Russell Street, Missoula, Montana 59801-8591
Phone 406/721-4320 Fax 406/549-6371

USFS - CLEARWATER N.F.
NORTH FORK SPRUCE CREEK
BRIDGE REPLACEMENT

BID ALTERNATE NO. 1
DECK PLAN
AND GLU-LAM PANEL DETAILS

SHEET 13A OF 14A

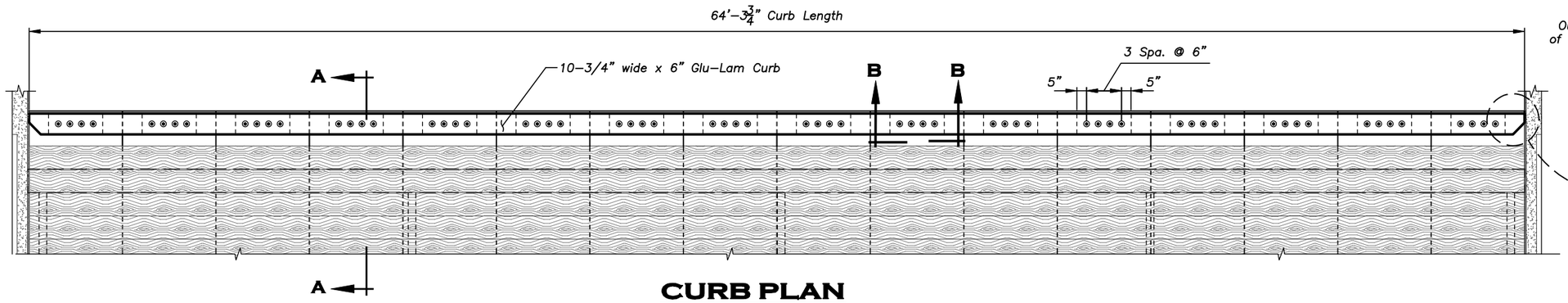

CURB PLAN

Scale: 3/16" = 1'

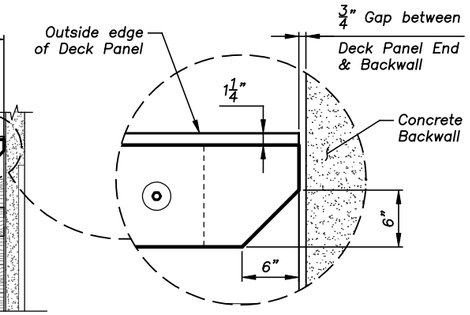

TYPICAL CURB END

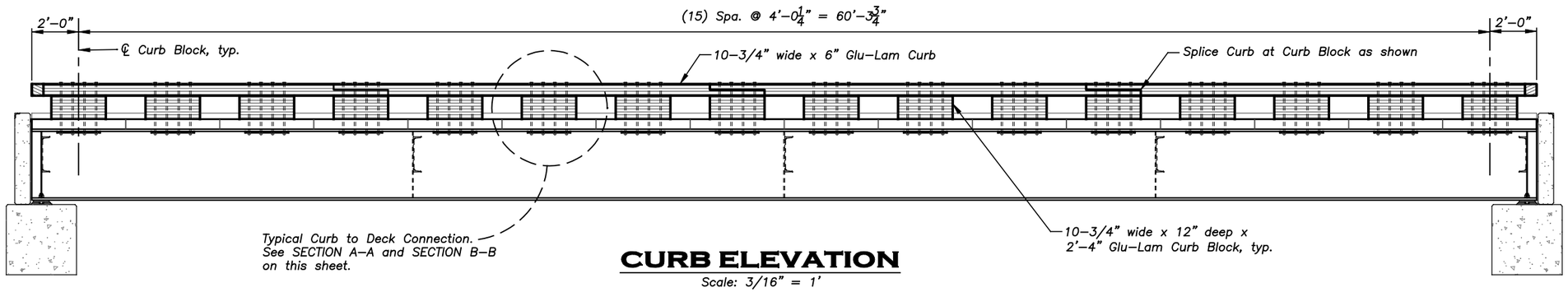

CURB ELEVATION

Scale: 3/16" = 1'

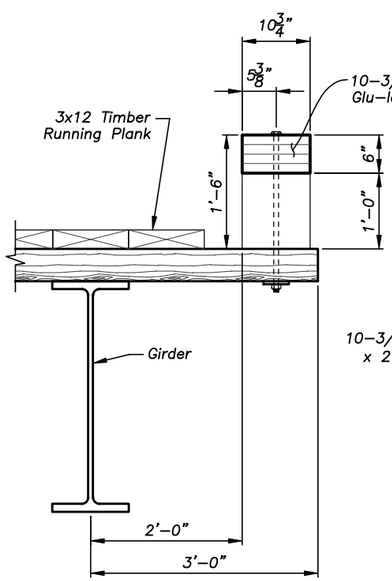

SECTION A-A

Not to Scale

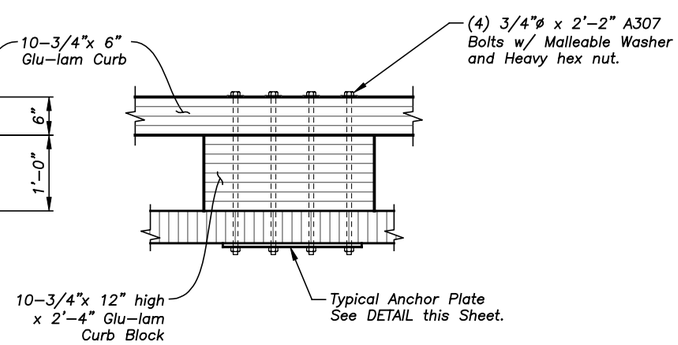

SECTION B-B

Not to Scale

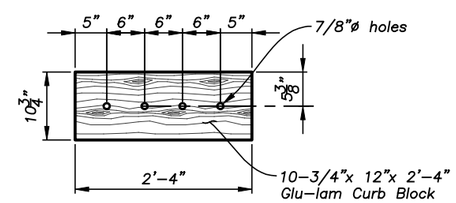

CURB BLOCK

Not to Scale

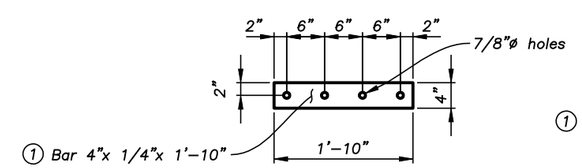

1 A36 steel galvanized in accordance with AASHTO M232 (ASTM A153).

ANCHOR PLATE

Not to Scale

REGION ONE

BY	DATE	REVISION DESCRIPTION

DESIGN CT PROJ. NO. 5380.01
DRAWN CT DATE MAR 08
CHECKED MJ SURVEYED DJ&A

DJ&A, P.C.
CONSULTING ENGINEERS & LAND SURVEYORS
3203 Russell Street, Missoula, Montana 59801-8591
Phone 406/721-4320 Fax 406/549-6371

USFS - CLEARWATER N.F.
NORTH FORK SPRUCE CREEK
BRIDGE REPLACEMENT

BID ALTERNATE NO. 1
TIMBER CURB DETAILS

SHEET 14A OF 14A