AMENDMENT OF SOLICITATION/MODIFICATION OF CONTRACT

1. CONTRACT ID CODE	PAGE	OF	PAGES
	1		1

2. AMENDMENT/MODIFICATION NO.	3. EFFECTIVE DATE	4. REQUISITION/PURCHASE REQ. NO.	5. PROJECT NO. *(If applicable)*
0001	07/10/2014	82-1028-14	

6. ISSUED BY CODE N00173

Naval Research Laboratory
4555 Overlook Avenue, SW
Washington, DC 20375
ATTN: Code 3220.RV

7. ADMINISTERED BY *(If other than Item 6)* CODE

8. NAME AND ADDRESS OF CONTRACTOR *(No., street, county, State and ZIP Code)*

CODE FACILITY CODE

(X) ☒ 9A. AMENDMENT OF SOLICITATION NO. N00173-14-R-VH02

9B. DATED *(SEE ITEM 11)* 06/10/2014

☐ 10A. MODIFICATION OF CONTRACT/ORDER NO.

10B. DATED *(SEE ITEM 13)*

11. THIS ITEM ONLY APPLIES TO AMENDMENTS OF SOLICITATIONS

☒ The above numbered solicitation is amended as set forth in Item 14. The hour and date specified for receipt of Offers ☒ is extended, ☐ is not extended.

Offers must acknowledge receipt of this amendment prior to the hour and date specified in the solicitation or as amended, by one of the following methods: (a) By completing items 8 and 15, and returning 1 copies of the amendment; (b) By acknowledging receipt of this amendment on each copy of the offer submitted; or (c) By separate letter or telegram which includes a reference to the solicitation and amendment numbers. FAILURE OF YOUR ACKNOWLEDGMENT TO BE RECEIVED AT THE PLACE DESIGNATED FOR THE RECEIPT OF OFFERS PRIOR TO THE HOUR AND DATE SPECIFIED MAY RESULT IN REJECTION OF YOUR OFFER. If by virtue of this amendment your desire to change an offer already submitted, such change may be made by telegram or letter, provided each telegram or letter makes reference to the solicitation and this amendment, and is received prior to the opening hour and date specified.

12. ACCOUNTING AND APPROPRIATION DATA *(If required)*

13. THIS ITEM ONLY APPLIES TO MODIFICATION OF CONTRACTS/ORDERS. IT MODIFIES THE CONTRACT/ORDER NO. AS DESCRIBED IN ITEM 14.

CHECK ONE	
☐	A. THIS CHANGE ORDER IS ISSUED PURSUANT TO: *(Specify authority)* THE CHANGES SET FORTH IN ITEM 14 ARE MADE IN THE CONTRACT ORDER NO. IN ITEM 10A.
☐	B. THE ABOVE NUMBERED CONTRACT/ORDER IS MODIFIED TO REFLECT THE ADMINISTRATIVE CHANGES *(such as changes in paying office, appropriation date, etc.)* SET FORTH IN ITEM 14, PURSUANT TO THE AUTHORITY OF FAR 43.103(b).
☐	C. THIS SUPPLEMENTAL AGREEMENT IS ENTERED INTO PURSUANT TO AUTHORITY OF:
☐	D. OTHER *(Specify type of modification and authority)*

E. IMPORTANT: Contractor ☐ is not, ☐ is required to sign this document and return _____ copies to the issuing office.

14. DESCRIPTION OF AMENDMENT/MODIFICATION *(Organized by UCF section headings, including solicitation/contract subject matter where feasible.)*

This amendment is being issued to address questions received in response to the solicitation. The response time to the solicitation has been extended to 12:00 noon, EST on 18 JuL 14.

See attached Q&A document.

Except as provided herein, all terms and conditions of the document referenced in Item 9A or 10A, as heretofore changed, remains unchanged and in full force and effect.

15A. NAME AND TITLE OF SIGNER *(Type or print)*		16A. NAME AND TITLE OF CONTRACTING OFFICER *(Type or print)*	
15B. CONTRACTOR/OFFEROR *(Signature of person authorized to sign)*	15C. DATE SIGNED	16B. UNITED STATES OF AMERICA *(Signature of Contracting Officer)*	16C. DATE SIGNED

Questions and Answers
RFP N00173-14-R-VH02

Q: Are there photographs of the existing panels available?
A: Yes, Photo's of the PLC cabinets are attached..

Q: On the site plan on page 14, it looks like the Big Blue TVAC and TCU PLC's and the North and South PLC's are located together, were is the Procidia PLC panel?
A: The Big Blue TVAC and TCU PLCs are located in a common cabinet at the North West corner of Big Blue. The North chamber and South chamber PLCs are located on the West wall near the two chambers. The Procidia PLC is located in the TCU it controls which is in the Pump room just to the west of the Big Blue PLCs.

Q: Is there a Procidia PLC panel drawing?
A: Yes. Drawings for the TCU that contains the Procidia controller are attached.

Q: Would you consider building new PLC panels and swapping them with existing panels verses reusing existing panels to install new Rockwell PLC hardware.
A: Building new panels or reusing existing panels is up to the offeror to determine what their best approach is. If the Offeror approach is to build new panels the new enclosures would have to fit in the area the current enclosures are mounted and the current hardware not used be removed.

Q: What are downtime concerns per PLC change over?
A: We would like to have one system at a time changed but you have the period of performance to complete the work.

Q: Are we doing anything with the SCR panel?
A: ou should not have to change anything IN the SCR cabinet but the TCU PLC interfaces and controls that hardware.

Q: Are the existing HMI Displays available to view?
A: HDMI displays are not currently available to view, however the HMI displays will be available upon award of the contract.

Q: How many HMI Displays are there?
A: There are 20 for Big Blue, 7 for the North chamber and 10 for the South chamber.

Q: Are the specifications for the 2 each, 10 HP motors for the VFD's available?
A: The HP motors are Brook Crompton. Frame W-DA256TC-T, Part Number 160W000340 and available at the following Web page http://www.brookcrompton.com/pdf-files/2209e_nema_v1.1e.pdf

Q: Are the specifications or model numbers available for the 12 each VAT Vakuumventile AG Valves?
A: The requirements for the valves are stated in the SOW at 3.1.3.2. The SOW allows some choice of valves as long as the requirements in the SOW 3.1.3.2 are met.

Q: Are the valves welded in place or bolted?
A: The valves are bolted to flanges. The flanges are welded to the piping, so if the new valves are a different thickness the piping will need to be cut and pipe removed or added to accommodate the new valves.

Q: Are the valves reachable on the ground and easily accessible?
A: None of the valves are at ground level. A ladder or other staging will be needed to replace the valves.

Q: Can the valve bodies of any of the listed valve sizes be made of aluminum (instead of stainless steel)?
A: Please refer to Section 3.1.3.2 of the SOW.

Q: Can the two (2) 8” blower isolation valves use a shaft feedthrough instead of a bellows feedthrough design?
A: Please refer to Section 3.1.3.2 of the SOW.

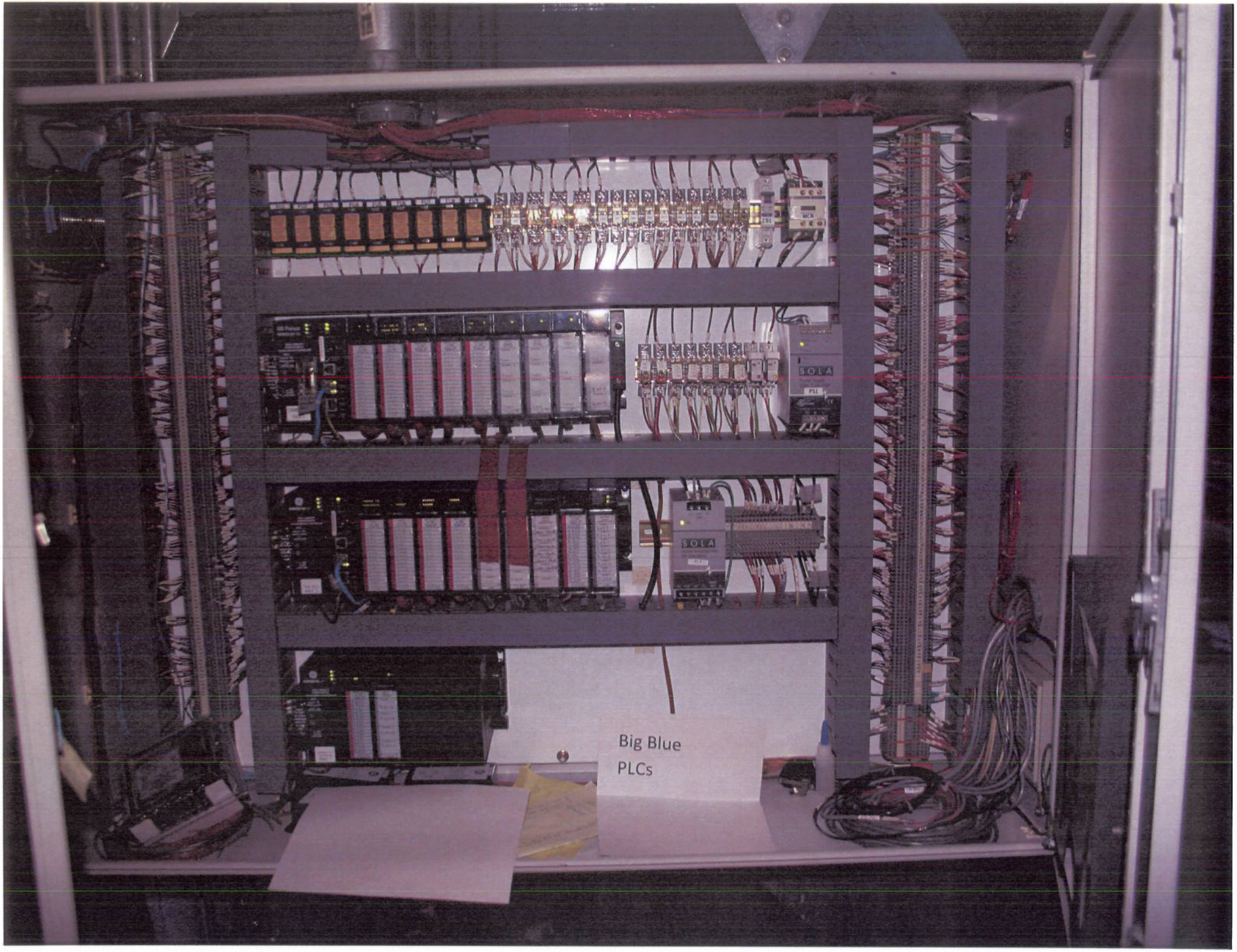
SOLA
SOLA
Big Blue
PLCs

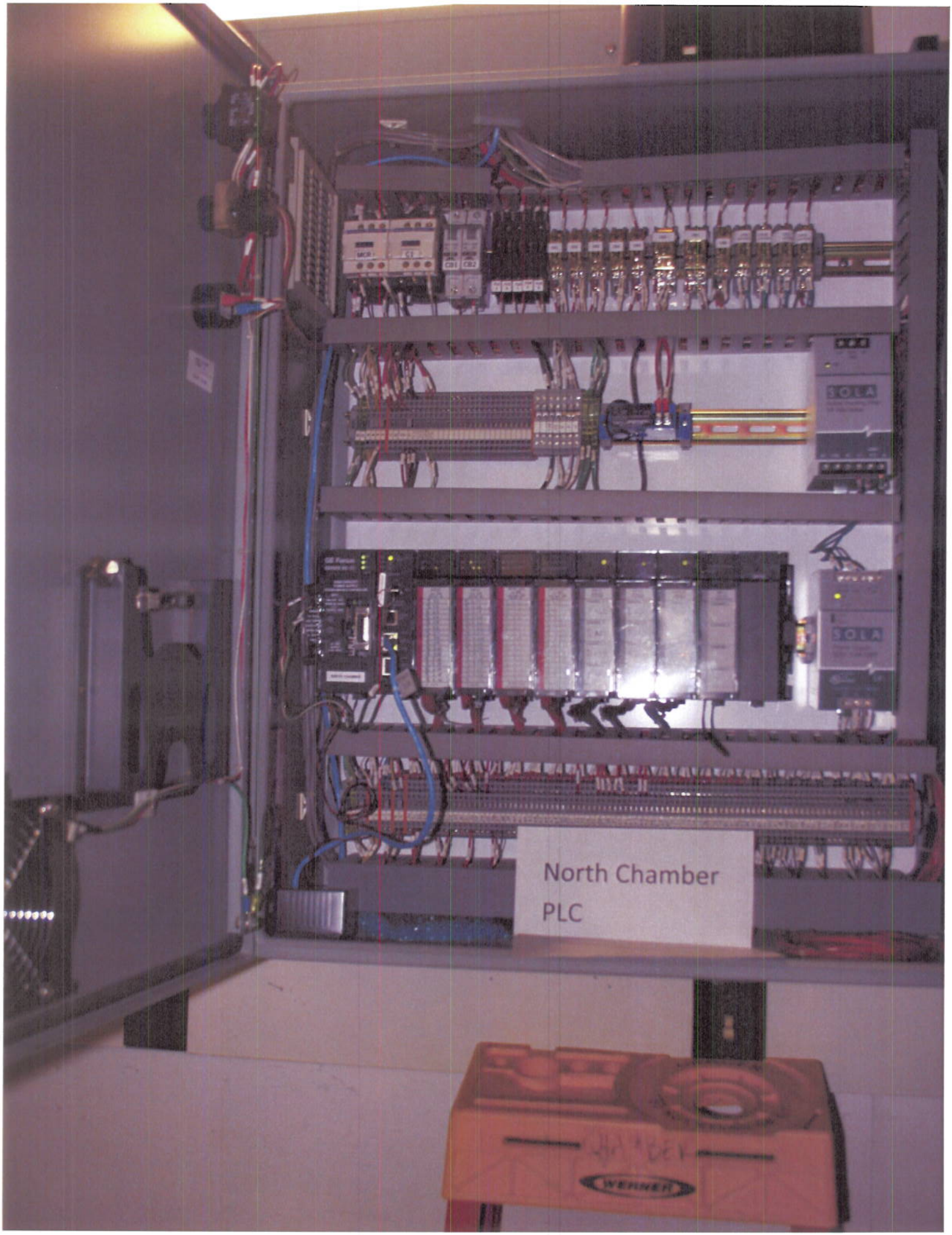
North Chamber
PLC
WERNER

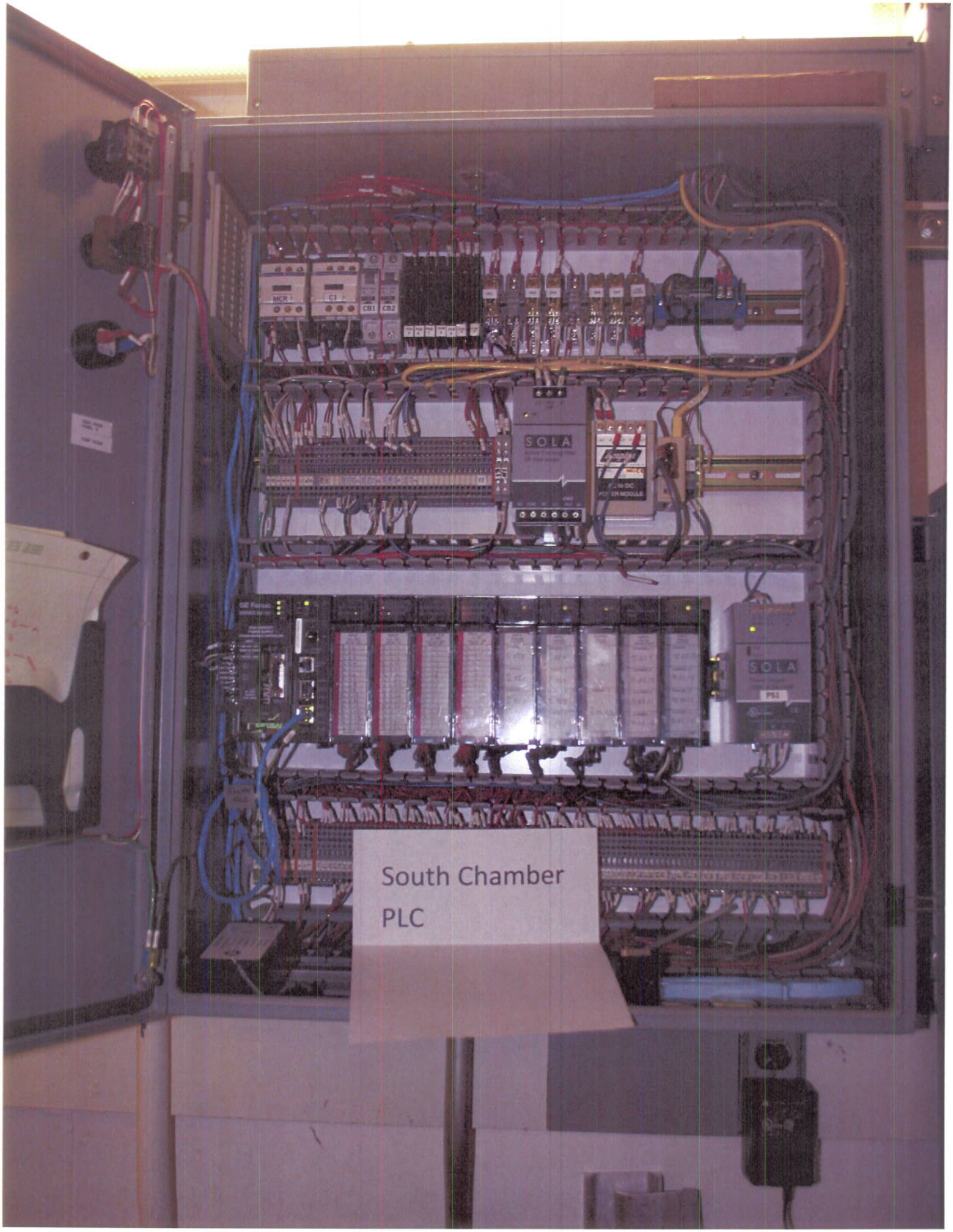
South Chamber
PLC

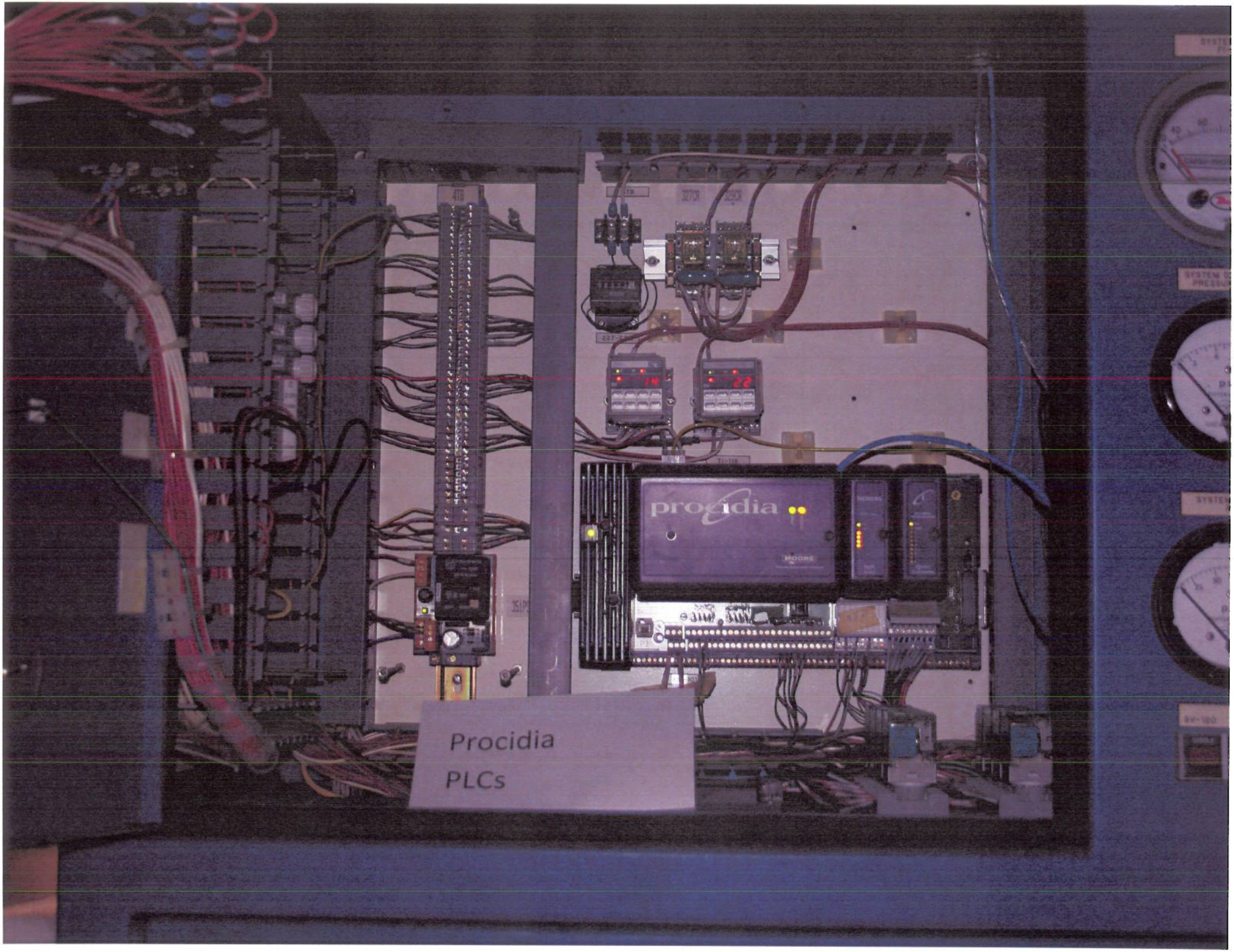
procidia
MOORE
Procidia
PLCs

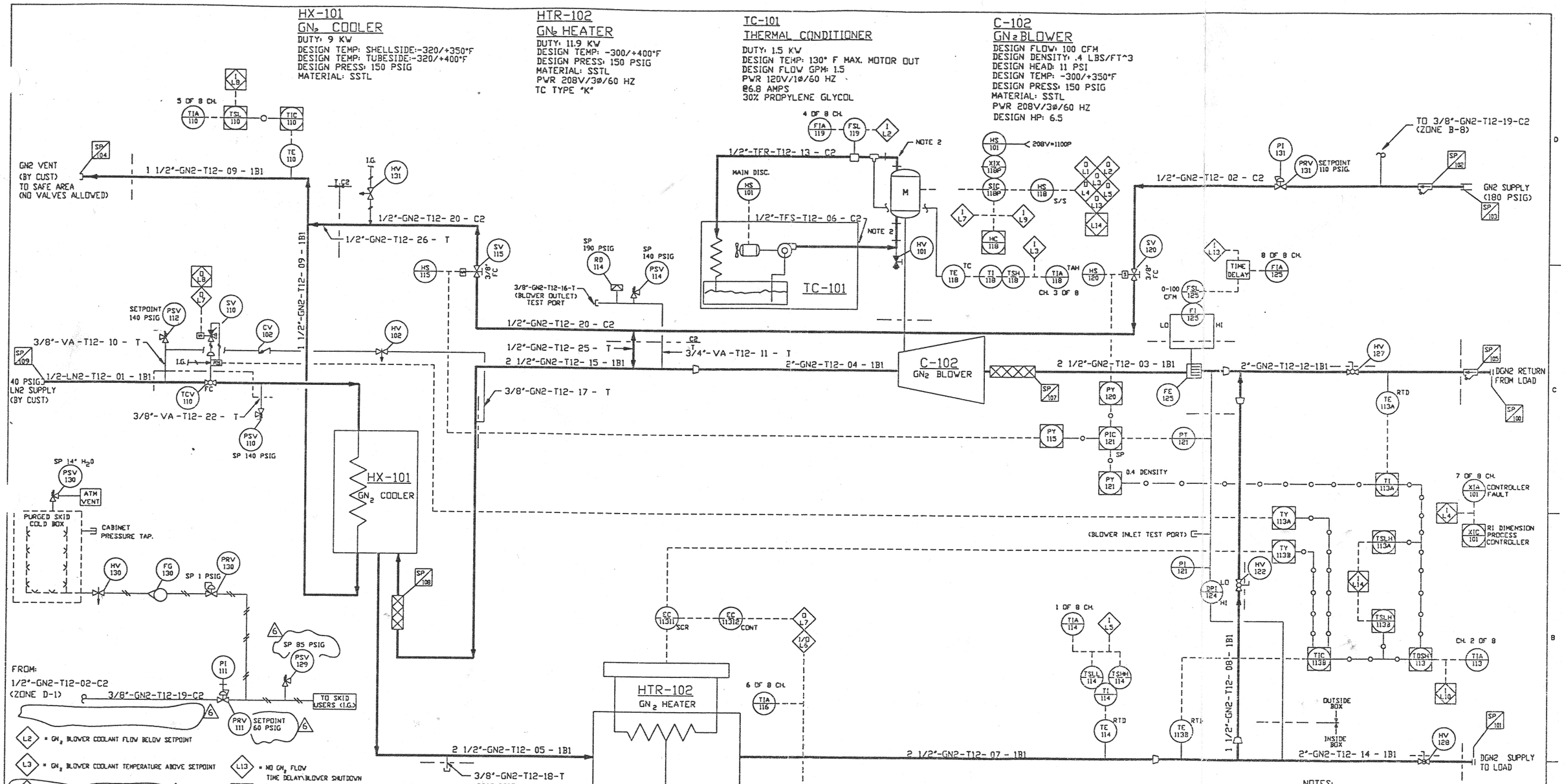

NOTES:

1.) SP 100,101, 104 & 105 CONNECTION THREADS, SEALED WITH 90-10 SOLDER.

2.) ELECTRICALLY ISOLATE MOTOR FROM COPPER TUBING WITH PLASTIC/RUBBER TUBING.

3.) LAST LINE NUMBER -26.

REV	DESCRIPTION	DATE	BY:	CHK'D:	ENGR:	MFG:	APPV'D:
6	REVISED DCO# 006	1.14.97	GHD				
5	ISSUE AS BUILT PER DCO #146	3/11/94	SMV		RFB		
4	ISSUE FOR CONSTRUCTION PER DCO #	12/8/93	SMV		RFB		
3	ISSUE FOR CONSTRUCTION PER DCO #043	5/13/93	SMV		RFB		
2	ISSUE FOR P&ID REVIEW DCO #025	4/23/93	SMV		RFB		
1	ISSUE FOR COMMENTS DCO #022	3/23/93	SMV		RFB		
0	ISSUE FOR CLIENT COMMENTS DCO #005	1/23/93	LD		RFB		

EQUIP. THIS DWG.

PROPRIETARY AND CONFIDENTIAL

EXCEPT AS OTHERWISE AGREED IN WRITING, THE INFORMATION AND DESIGN DISCLOSED HEREIN ARE THE PROPERTY OF PROCESS SYSTEMS INTERNATIONAL AND MUST NOT BE COPIED OR DISTRIBUTED OUTSIDE PSI EXCEPT TO AUTHORIZED PERSONS WITH A GENUINE NEED TO KNOW WHO BY THE USE HEREOF ACKNOWLEDGE PSI OWNERSHIP AND AGREE TO MAINTAIN THIS INFORMATION AND DESIGN IN STRICT CONFIDENCE.

PROCESS SYSTEMS INTERNATIONAL INC.
20 WALKUP DR. WESTBOROUGH, MASSACHUSETTS 01581 USA

PROCESS & INSTRUMENTATION DIAGRAM
MODEL TCU-1100P
GN2 THERMAL CONDITIONING UNIT

CAD FILE NO.	SIZE	DWG. NO.	REV.
8093002	D	8093002	6
SCALE NONE		SHEET 1 OF 1	

LAST UPDATE: 4/14/94

Jan 14, 1997 - 10:16:46

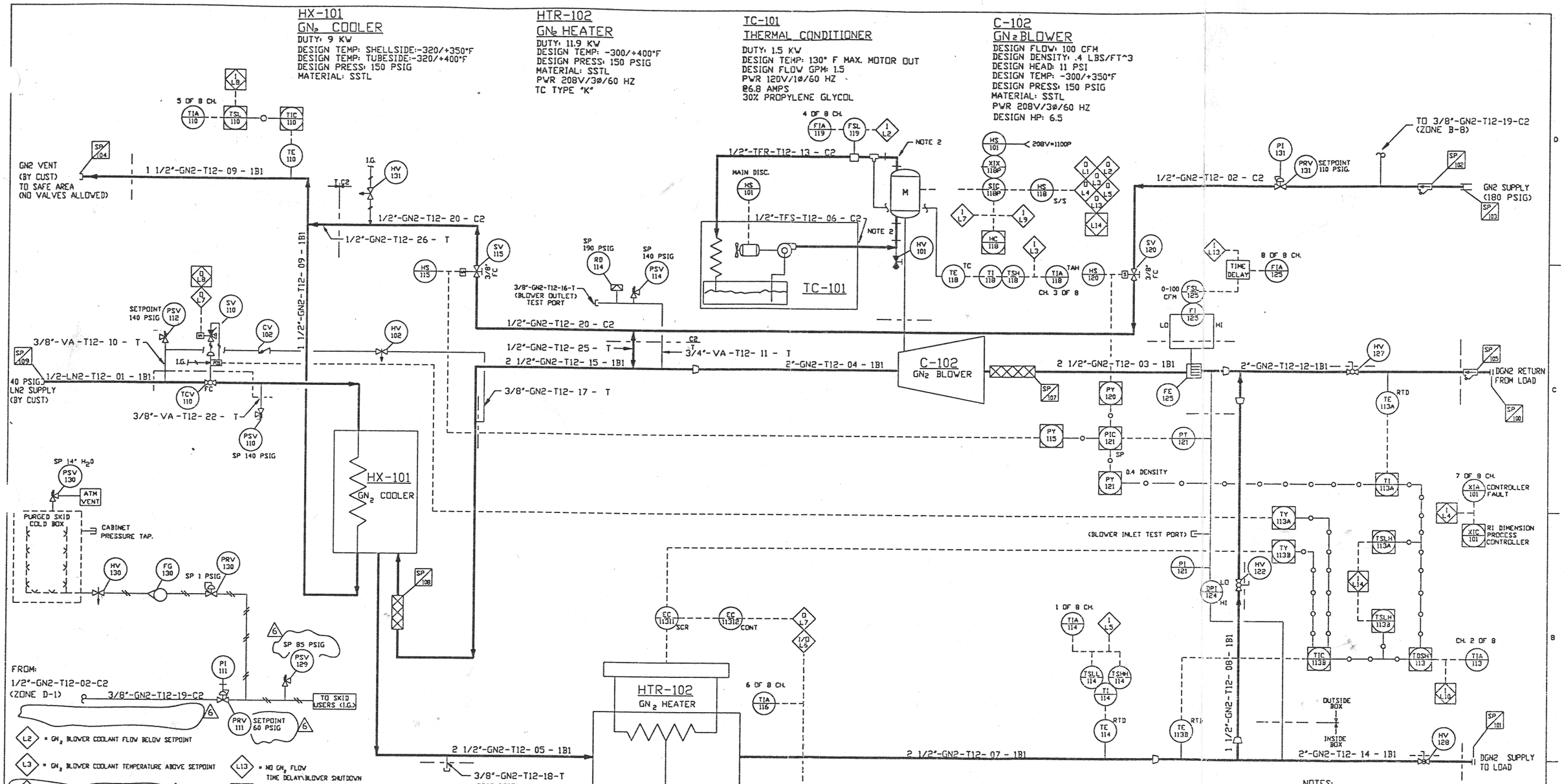

NOTES:

1.) SP 100,101, 104 & 105 CONNECTION THREADS, SEALED WITH 90-10 SOLDER.

2.) ELECTRICALLY ISOLATE MOTOR FROM COPPER TUBING WITH PLASTIC/RUBBER TUBING.

3.) LAST LINE NUMBER -26.

REV	DESCRIPTION	DATE	BY:	CHK'D:	ENGR:	MFG:	APPV'D:
6	REVISED DCO# 006	1.14.97	GHD				
5	ISSUE AS BUILT PER DCO #146	3/11/94	SMV		RFB		
4	ISSUE FOR CONSTRUCTION PER DCO #	12/8/93	SMV		RFB		
3	ISSUE FOR CONSTRUCTION PER DCO #043	5/13/93	SMV		RFB		
2	ISSUE FOR P&ID REVIEW DCO #025	4/23/93	SMV		RFB		
1	ISSUE FOR COMMENTS DCO #022	3/23/93	SMV		RFB		
0	ISSUE FOR CLIENT COMMENTS DCO #005	1/23/93	LD		RFB		

EQUIP. THIS DWG.

PROPRIETARY AND CONFIDENTIAL

EXCEPT AS OTHERWISE AGREED IN WRITING, THE INFORMATION AND DESIGN DISCLOSED HEREIN ARE THE PROPERTY OF PROCESS SYSTEMS INTERNATIONAL AND MUST NOT BE COPIED OR DISTRIBUTED OUTSIDE PSI EXCEPT TO AUTHORIZED PERSONS WITH A GENUINE NEED TO KNOW THEREBY THE USE HEREOF ACKNOWLEDGE PSI OWNERSHIP AND AGREE TO MAINTAIN THIS INFORMATION AND DESIGN IN STRICT CONFIDENCE.

PROCESS SYSTEMS INTERNATIONAL INC.
20 WALKUP DR. WESTBOROUGH, MASSACHUSETTS 01581 USA

PROCESS & INSTRUMENTATION DIAGRAM
MODEL TCU-1100P
GN2 THERMAL CONDITIONING UNIT

CAD FILE NO.	SIZE	DWG. NO.	REV.
8093002	D	8093002	6
SCALE NONE		SHEET 1 OF 1	

LAST UPDATE: 4/14/94

Jan 14, 1997 - 10:16:46

ELECTRICAL CONNECTIONS

NOZZLE ○	DESCRIPTION	CONN./SIZE	DETAIL #
1	N_2 RETURN FROM LOAD	PIPE - 2"MPT	DETAIL A
2	N_2 SUPPLY TO LOAD	PIPE - 2"MPT	DETAIL B
3	GN_2 VENT	PIPE - 1 1/2"MPT	DETAIL C
4	LN_2 SUPPLY (40 PSIG)	HALF CPLG - 1/2"FPT	DETAIL D
7	PRESSURE TAP	1\4" FPT	NONE
8	PRESSURE TAP	1\4" FPT	NONE
16	PRESSURE TAP	1\4" FPT	NONE
17	GN_2 SUPPLY (180 PSIG)	3/8" FPT (STRAINER)	NONE

PLUG ◇	DESCRIPTION	SERVICE
1	PLUG P1 (CONTROL & BLOWER POWER)	208VAC, 60HZ, 3ø
2	PLUG P2 (HEATER POWER)	208VAC, 60HZ, 3ø

ESTIMATED WEIGHT OF UNIT: 3500 LBS.

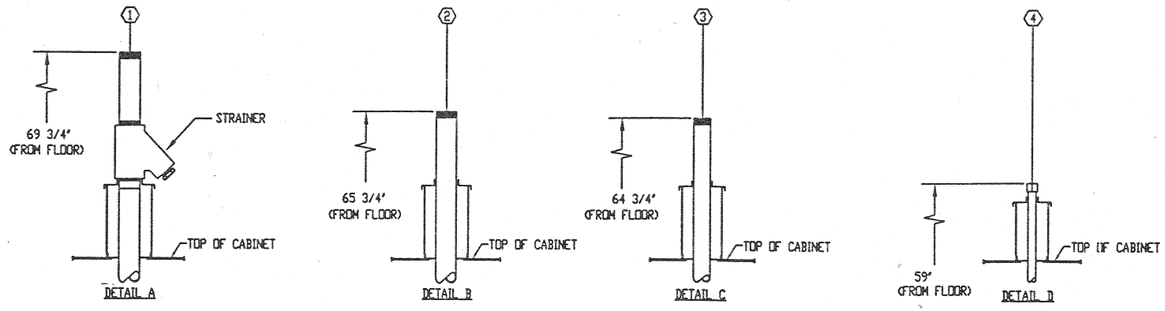

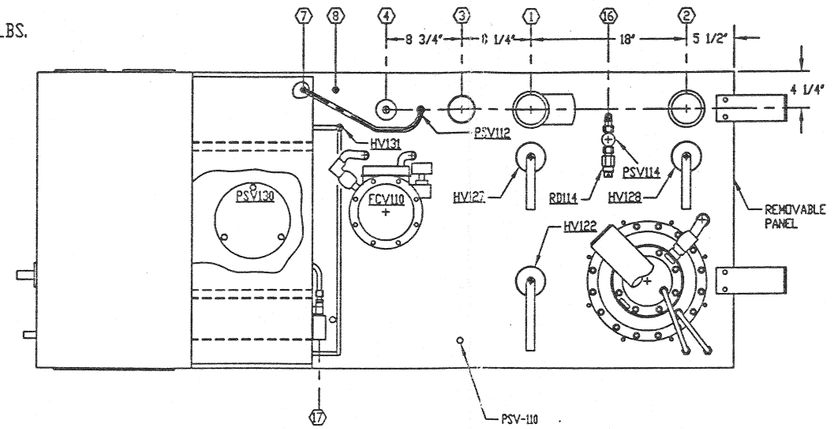

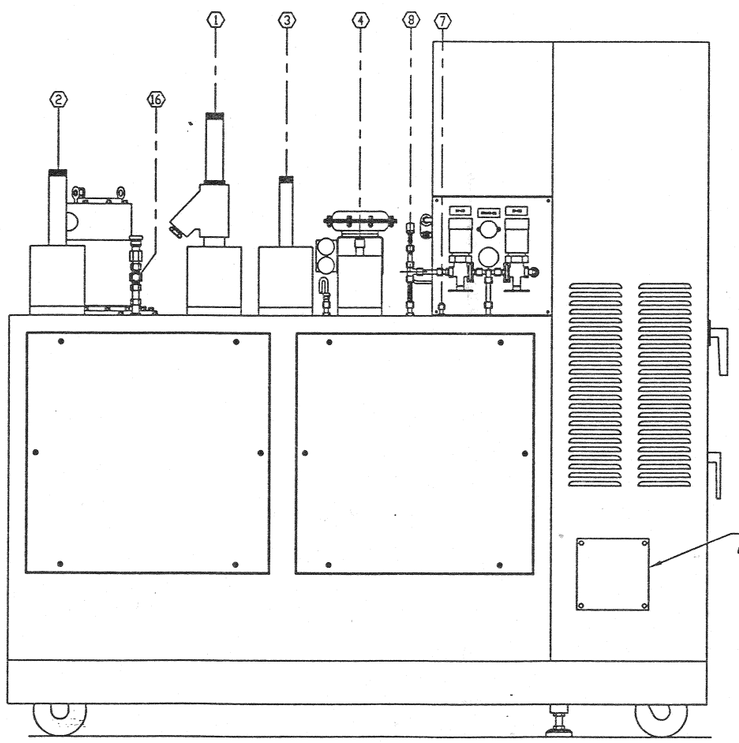

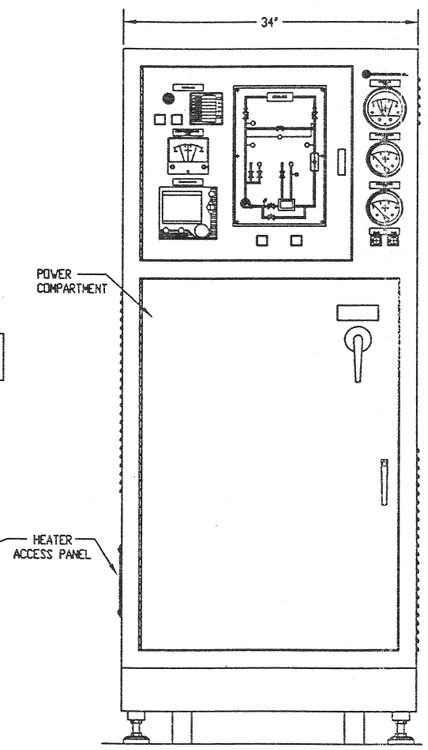

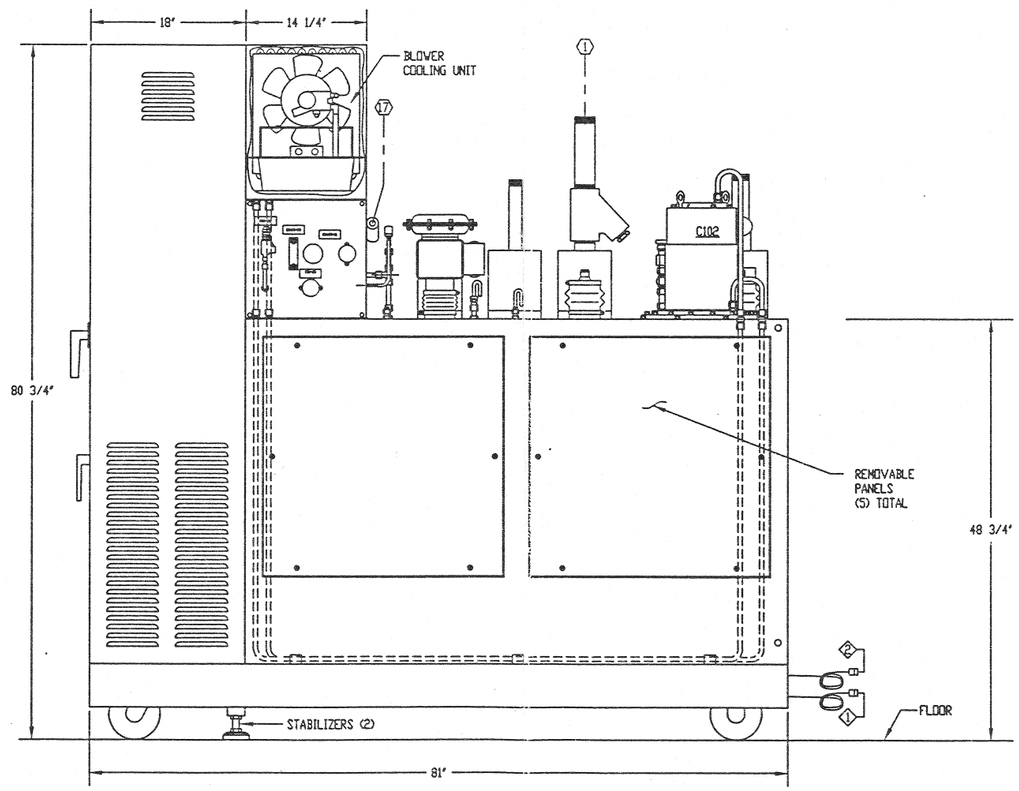

REFERENCE DRAWINGS	REV	DATE	DEO NO.	REVISIONS	BY	AP.

REV	DATE	DEO NO.	REVISIONS	BY	AP.
0	1-24-94	167	ISSUED FOR CONSTRUCTION	PV	TOM S.

UNLESS OTHERWISE SPECIFIED
DIMENSIONS ARE IN INCHES
TOLERANCES:
FRACTIONAL ±
ANGULAR:MACH ± 0-30' BEND ±
TWO PLACE DECIMAL ±
THREE PLACE DECIMAL ±
FINISHED SURFACE RMS
BREAK CORNERS IN OUT
REMOVE ALL BURRS

DO NOT SCALE THIS DRAWING

USED ON TCU-1100P
NEXT ASSY. PL8093015

PROPRIETARY AND CONFIDENTIAL:
EXCEPT AS OTHERWISE AGREED IN WRITING, THE INFORMATION AND DESIGN DISCLOSED HEREIN ARE THE PROPERTY OF PROCESS SYSTEMS INTERNATIONAL, AND MUST NOT BE COPIED OR DISTRIBUTED OUTSIDE PSI EXCEPT TO AUTHORIZED PERSONS WITH A GENUINE NEED TO KNOW WHO BY THE USE HEREOF ACKNOWLEDGE PSI OWNERSHIP AND AGREE TO MAINTAIN THIS INFORMATION AND DESIGN IN STRICT CONFIDENCE.

ORIGINAL ISSUE		
DRWN.	PV	1-23-94
CHK'D.		
ENGR.		
MFG.		
APVD.	TOM S.	1-27-94

PROCESS SYSTEMS INTERNATIONAL INC.
20 WALKUP DR. WESTBOROUGH, MASSACHUSETTS 01581 USA

INSTALLATION INTERFACE
MODEL #TCU-1100P
GN2 THERMAL CONDITIONING UNIT

CAD FILE NO.	SIZE	DWG. NO.	REV.
80930100	D	8093010	A

SCALE 1/8" = 1" SHEET 1 OF 1

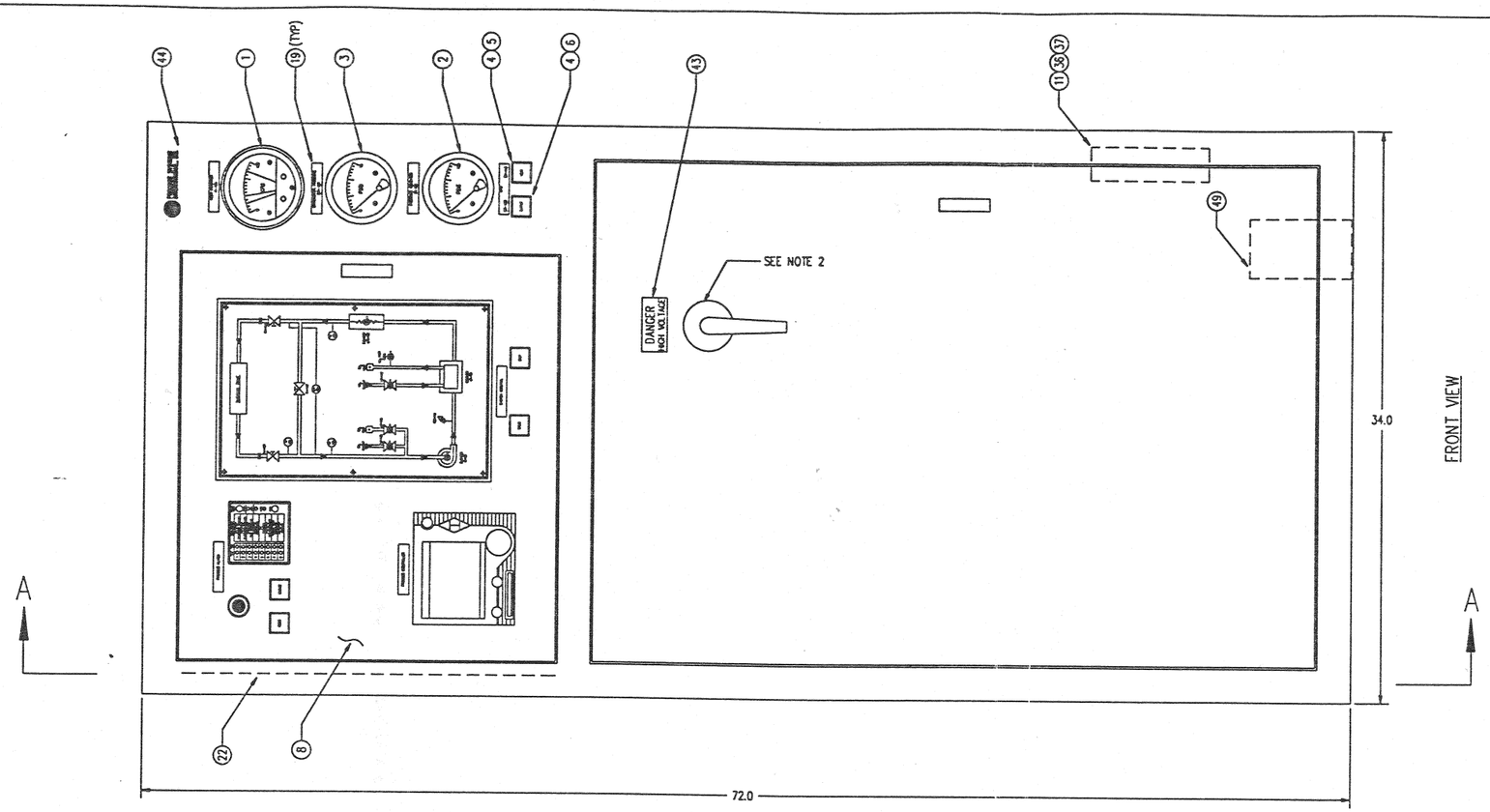

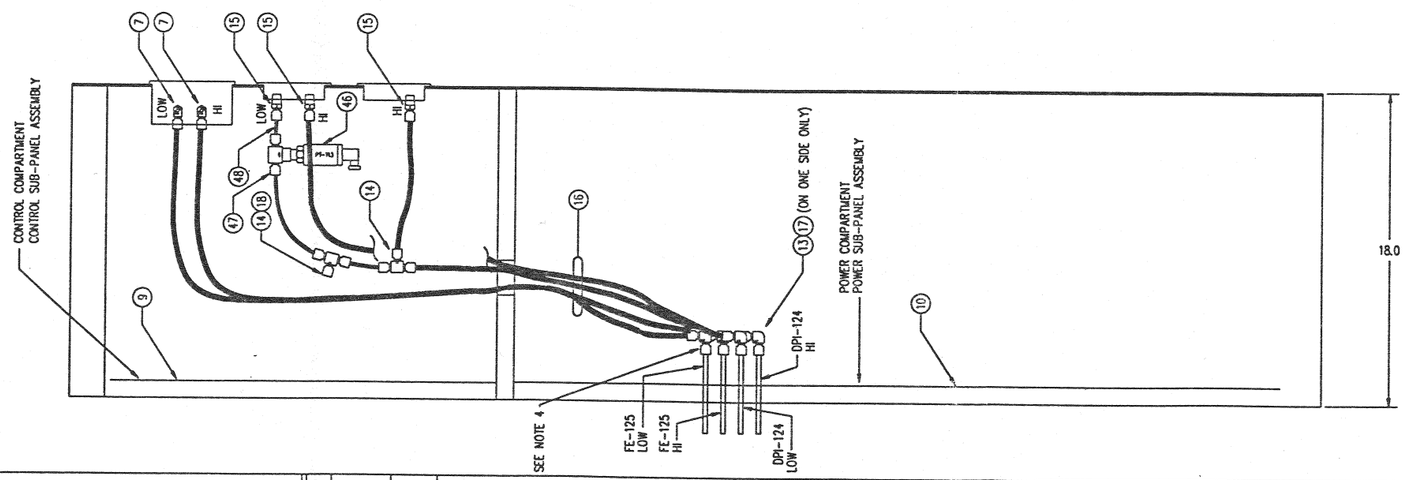

NOTES:

1. CONSOLE STRUCTURE IS PART OF CABINET ASSEMBLY DWG. E8093102.
2. INSTALL HANDLE FOR DISCONNECT SWITCH PER MANUFACTURE MOUNTING INSTRUCTIONS REFER TO DWG. 8093154 ITEMS 9, 10, 11, 12, 13.
3. FOR WIRING SEE SCHEMATIC DWG. D8093161.
4. REPLACE NYLON FERRULE W/ ITEM 45 ON SSTL TUBE END ONLY. TYPICAL 4 PLACES

ITEM	QTY	PSI #	MANUFACTURER	MAN. PART #	DESCRIPTION
49	1	300094	SHULTZ	RL03502	LINE REACTOR
48	5 FT	50-03-46	-	-	1/4" TUBE, CU, 30 WT, TYPE L
47	1	51-12-71	SWAGELOK	B-400-3-4-TTF	FEMALE BRANCH TEE, 1/4", BRASS
46	1	3542-1597	BARKSDALE	805H4-05	TRANSMITTER, PRESSURE, 0-150 PSIG, 4-20mA
45	4	51-99-87	SWAGELOK	-	1/4" SSTL FERRULE SET
44	REF.	8093164			SILKSCREEN DWG: PSI LOGO
43	1	300050	PANDUIT	PSSB-13	HIGH VOLTAGE MARKER
42	-	-	-	-	-
41	-	-	-	-	-
40	-	-	-	-	-
39	-	-	-	-	-
38	-	-	-	-	-
37	1	52-13-59	-	-	10-32 SELF TAPPING SCREW
36	4	52-99-40	-	-	6-32 MACHINE SCREW
35	20'	82-91-53	ANIXTER	6G-1001	WIRE, #10 AWG, TYPE THHN, 600V, GRN
34	.06	82-90-20	BRADY	HCPS9-3758W	WIRE MARKERS
33	90'	82-91-51	MANHATTAN	M4911	WIRE, #18 AWG, 600V, WHT, TEFLON INSUL.
32	90'	82-91-50	MANHATTAN	M4911	WIRE, #18 AWG, 600V, RED, TEFLON INSUL.
31	80'	82-91-49	ANIXTER	6G-1201	WIRE, #12 AWG, TYPE THHN, 600V, GRN
30	40'	82-91-48	ANIXTER	6G-1401	WIRE, #14 AWG, TYPE THHN, 600V, GRN
29	20'	82-91-47	ANIXTER	6G-1401	WIRE, #14 AWG, TYPE THHN, 600V, BLU
28	200'	82-91-46	ANIXTER	6G-1401	WIRE, #14 AWG, TYPE THHN, 600V, WHT
27	400'	82-91-45	ANIXTER	6G-1401	WIRE, #14 AWG, TYPE THHN, 600V, RED
26	2'	82-91-44	ANIXTER	6G-0601	WIRE, #6 AWG, TYPE THHN, 600V, GRN
25	60'	82-91-43	ANIXTER	6G-0601	WIRE, #6 AWG, TYPE THHN, 600V, BLK
24	10'	82-91-40	MANHATTAN	M44826	CABLE, 3 COND. #18 SH, TEFLON INSUL.
23	10'	82-91-35	MANHATTAN	M44834	CABLE, 2 COND. #16 SH, FLOURO-GEN INSUL.
22	1	8093155	-	-	CONTROL SUB-PANEL #2 ASSEMBLY "D" SIZE DWG.
21			-		
20					
19	REF	8093169	-	-	NAMEPLATE DETAILS "D" SIZE DWG.
18	1	51-10-26	SWAGELOK	B-400-P	PLUG, 1/4" BRASS
17	1	57-93-43	SWAGELOK	NY-400SETS10	FERRULE PAK
16	25'	50-10-37	McMASTER CARR	5180K15	POLYETHYLENE TUBING 1/4" OD X 1/8" ID
15	5	51-90-45	SWAGELOK	84004-4-KN	MALE CONNECTOR-KN 1/4"T X 1/4" MPT
14	2	51-12-03	SWAGELOK	B-400-3-KN	UNION TEE - KN TUBE FITTING 1/4"
13	4	51-47-75	SWAGELOK	SS-400-9 KN	UNION ELBOW 1/4"
12	-	-	-	-	-
11	1	82-94-01	ROTRON	028422	FAN, 115 CFM, 115 VAC
10	1	8093154	-	-	POWER SUB PANEL ASSEMBLY "D" SIZE DWG.
9	1	8093151	-	-	CONTROL SUB-PANEL #1 ASSEMBLY "D" SIZE DWG.
8	1	8093152	-	-	OPERATORS PANEL ASSEMBLY "D" SIZE DWG.
7	2	51-17-30	SWAGELOK	B-400-2-4-KN	ELBOW, MALE - KN TUBE FITTING 1/4"
6	1	82-93-99	ALLEN-BRADLEY	800MS-VA600E	PLATE LEGEND RED MARKED "SUPPLY"
5	1	82-93-98	ALLEN-BRADLEY	800MS-VA100E	PLATE LEGEND GREEN MARKED "VENT"
4	2	82-93-77	ALLEN-BRADLEY	800MB-XC0AK	OPERATOR PUSHBUTTON SQUARE
3	1	3542-1592-P2	ORANGE	1502DG1A3.5C	METER 3 1/2" DIAL, RANGE 0-15 PSID
2	1	3542-1592-P1	ORANGE	1502DG1A3.5C	METER 3 1/2" DIAL, RANGE 0-125 PSIG
1	1	3542-1600-P1	DWYER	MODEL 43010	METER 4" DIAL, SQUARE ROOT SCALE

REFERENCE DRAWINGS	
D8093161	ELECTRICAL SCHEMATIC (SH. 1-7)
E8093102	CABINET ASSEMBLY

REV	DATE	DCO NO.	REVISIONS	BY	AP.
D	1/14/97	006	AS BUILT	GHD	
C	1/18/94	164	REVISED	GHD	AFG,RFB
B	11/5/93	126	REVISED	GHD	AFG,RFB
A	5/12/93	044	ISSUED FOR FABRICATION	MPR	AFG,RFB
0	3/22/93	022	ISSUED FOR REVIEW	MPR	

UNLESS OTHERWISE SPECIFIED
DIMENSIONS ARE IN INCHES
TOLERANCES:
FRACTIONAL ±
ANGULAR:MACH ± 0-30' BEND ±
TWO PLACE DECIMAL ±
THREE PLACE DECIMAL ±
FINISHED SURFACE RMS
BREAK CORNERS IN OUT
REMOVE ALL BURRS

DO NOT SCALE THIS DRAWING

USED ON: TCU-1100P
NEXT ASSY. D8093150

PROPRIETARY AND CONFIDENTIAL
EXCEPT AS OTHERWISE AGREED IN WRITING, THE INFORMATION AND DESIGN DISCLOSED HEREIN ARE THE PROPERTY OF PROCESS SYSTEMS INTERNATIONAL AND MUST NOT BE COPIED OR DISTRIBUTED OUTSIDE PSI EXCEPT TO AUTHORIZED PERSONS WITH A GENUINE NEED TO KNOW HEAD BY THE USE HEREOF ACKNOWLEDGE PSI OWNERSHIP AND AGREE TO MAINTAIN THIS INFORMATION AND DESIGN IN STRICT CONFIDENCE.

ORIGINAL ISSUE

DWN.	MPR	3/22/93
CHK'D.	AG	3/22/93
ENGR.	DB	3/22/93
MFG.		
APVD.		

PROCESS SYSTEMS INTERNATIONAL INC.
20 WALKUP DR. WESTBOROUGH, MASSACHUSETTS 01581 USA

CONTROL CONSOLE ASSEMBLY
MODEL TCU-1100P
GN2 THERMAL CONDITIONING UNIT

CAD FILE NO. 8093151D | SIZE D | DWG. NO. 8093151 | REV. D
SCALE 1/4" = 1" | SHEET -

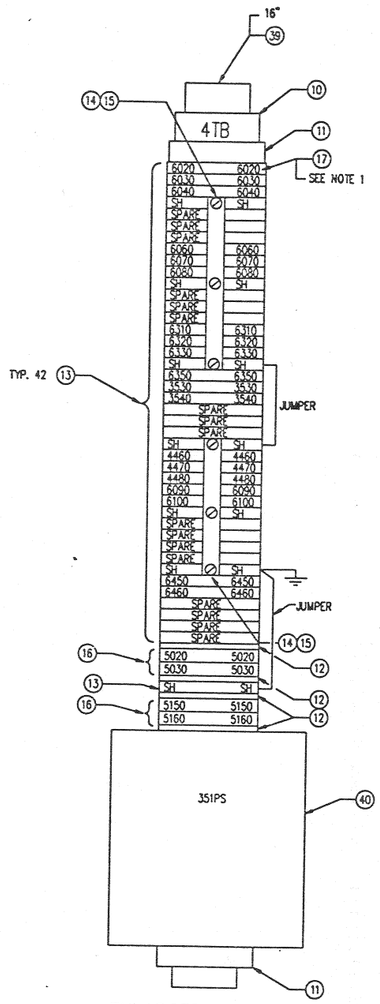

ENLARGED VIEW – A

NOTES:
1. LABEL BOTH SIDES OF TERMINAL BLOCK

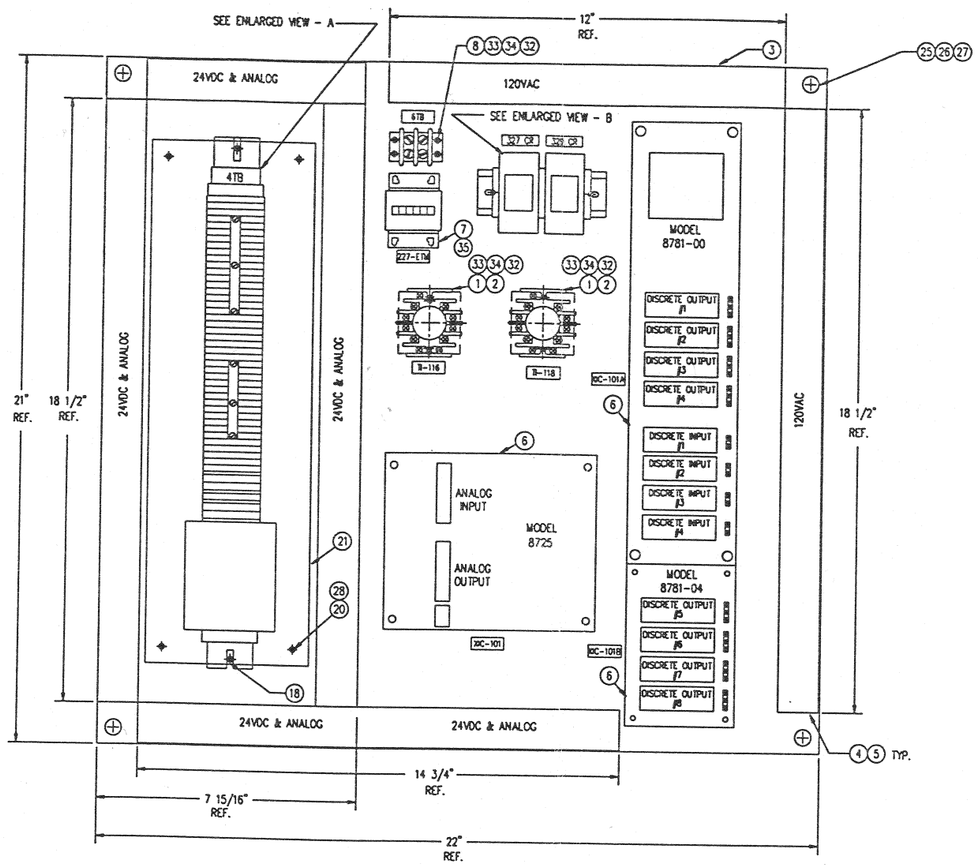

PLAN – FRONT VIEW

(FRONT PANEL)

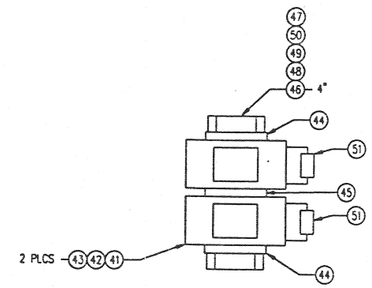

ENLARGED VIEW – B

ITEM	QTY	PSI #	MANUFACTURER	MAN. PART #	DESCRIPTION
51	2	300013			SUPPRESSOR
50	2	52-16-41			WASHER, LOCK #6
49	2	52-35-52			WASHER, FLAT #6
48	2	52-10-14			SCREW, 6-32 X 1 3/8"
47	2	82-93-66	KEYSTONE	3475	SPACER, ALUMINUM, 1"X 1/4" O.D.
46	5FT	82-93-60	IDEC	BND-1000	DIN RAIL
45	1	82-93-63	IDEC	SA-4DG	SPACER, RELAY, DIN RAIL
44	2	82-93-64	IDEC	BNL-5	CLIP END
43	2	82-93-61	IDEC	SY4S-05	SOCKET, RELAY BLADE,SNAP MOUNT
42	2	82-93-63	IDEC	SY4S02F1	SPRING, HOLD-DOWN
41	2	82-93-62	IDEC	RY4S-UL-120	RELAY, MINIATURE, 3A 4PDT
40	1	82-96-52	WIEDMUELLER	112076	POWER SUPPLY, 24VDC
39	1.5FT	82-93-12	ENTRELEC	101598.26	TERMINAL MTG. RAIL
38	4	52-16-21	-	-	WASHER, LOCK, #10, SSTL
37	4	52-36-39	-	-	WASHER, FLAT, #10, SSTL
36	4	52-12-99	-	-	BOLT, 10-32 X 3/4"
35	4	52-70-23	-	-	SCREW, 4-40, 5/8"
34	8	52-16-41	-	-	WASHER, LOCK, #6, SSTL
33	8	52-35-52	-	-	WASHER, FLAT, #6, SSTL
32	8	52-50-31	-	-	BOLT, 6-32 X 5/8"
31			-	-	
30			-	-	
29			-	-	
28	12	52-06-41	-	-	NUT, HEX, 8-32, SSTL
27	4	52-16-22	-	-	WASHER, LOCK, 3/8, SSTL
26	4	52-35-16	-	-	WASHER, FLAT, 3/8, SSTL
25	4	52-10-58	-	-	BOLT, 3/8-16 X 1" SSTL
24	30	52-16-19	-	-	WASHER, LOCK, #8, SSTL
23	30	52-36-38	-	-	WASHER, FLAT, #8, SSTL
22	30	52-12-97	-	-	SCREW, 8-32 X 3/4, SSTL
21	1	8093160-P4	-	-	MISC PANEL DETAILS "D" SIZE DWG.
20	4	50-17-58	-	-	ROD, THREADED 8-32 X 5"
19	REF	8093169	-	-	NAMEPLATE DETAILS "D" SIZE DWG.
18	4	82-93-66	KEYSTONE	3475	SPACER, ALUMINUM 1" X 1/4" OD
17	1	82-95-09	ENTRELEC	233000.01	MARKER CARD, BLANKS, TYPE RC610, 100 COUNT
16	4	82-95-05	ENTRELEC	115206.22	TERMINAL BLOCK, THERMOCOUPLE
15	8	82-95-04	ENTRELEC	168604.16	SUB-ASSEMBLY, JUMPER BAR, TYPE EV6
14	2	82-95-02	ENTRELEC	174784.20	JUMPER BAR, TYPE BJ55
13	44	82-94-99	ENTRELEC	115116.07	TERMINAL BLOCK, TYPE MA 4/6
12	4	82-94-95	ENTRELEC	118368.16	END SECTION, TYPE FEM 6
11	2	82-94-80	ENTRELEC	103002.26	END STOP, TYPE BAM
10	1	82-94-79	ENTRELEC	113984.01	MARKER-HOLDER, TYPE PEMB
9					
8	1	82-93-76	LINCH	2-141	BLOCK TERMINAL BARRIER, 2 POINT
7	1	82-93-67	MCMASTER-CARR	8695T16	METER HOUR, BASE MOUNT 7 DIGIT
6	1	V060-2-001	RESEARCH INC.	8725-R001-3333	DIMENSION SERIES PROCESS CONTROLLER
5	10 FT	81-80-42	PANDUIT	C1L66	COVER WIREWAY, LIGHT GRAY, 1" W, STYLE - E
4	10 FT	81-80-41	PANDUIT	E1X3L66	WIREWAY LIGHT GRAY 1" W X 3" H STYLE - E
3	REF	8093158-P1	-	-	CONTROL SUB-PANEL DRILLING "D" SIZE DWG.
2	2	200084	TYCO	345-1280	SOCKET 11 PIN SURFACE MOUNT
1	2	203309	OMEGA	PYZ41AY1-1V	CONTROLLER, TEMPERATURE

REFERENCE DRAWINGS	
8093160	MISC. PANEL DETAILS
8093151	CONTROL CONSOLE ASSEMBLY

REV	DATE	DCO NO.	REVISIONS	BY	AP.
E	9/20/96	003	REVISED		
D	3/22/94	193	REVISED	GHD	AFC/AFB
C	1/18/94	164	REVISED	GHD	AFC/AFB
B	9/8/93	126	REVISED	GHD	AFC/AFB
A	5/12/93	044	ISSUED FOR FABRICATION	MPR	AFC/JW
0	3/22/93	022	ISSUED FOR REVIEW	MPR	

UNLESS OTHERWISE SPECIFIED
DIMENSIONS ARE IN INCHES
TOLERANCES:
FRACTIONAL ±
ANGULAR:MACH ± 0-30' BEND ±
TWO PLACE DECIMAL ±
THREE PLACE DECIMAL ±
FINISHED SURFACE RMS
BREAK CORNERS IN CUT
REMOVE ALL BURRS

DO NOT SCALE THIS DRAWING

USED ON TCU-1100P
NEXT ASSY: 08093152

PROPRIETARY AND CONFIDENTIAL
EXCEPT AS OTHERWISE AGREED IN WRITING, THE INFORMATION AND DESIGN DISCLOSED HEREIN ARE THE PROPERTY OF PROCESS SYSTEMS INTERNATIONAL AND MUST NOT BE COPIED OR DISTRIBUTED OUTSIDE PSI EXCEPT TO AUTHORIZED PERSONS WITH A GENUINE NEED TO KNOW WHO BY THE USE HEREOF ACKNOWLEDGE PSI OWNERSHIP AND AGREE TO MAINTAIN THIS INFORMATION AND DESIGN IN STRICT CONFIDENCE.

ORIGINAL ISSUE

DWN.	MPR	3/22/93
CHK'D.	AC	3/22/93
DSGN.	TB	3/22/93
MFG.	MB	3/22/93
APPD.	WB	3/22/93

PROCESS SYSTEMS INTERNATIONAL INC.
20 WALKUP DR. WESTBOROUGH, MASSACHUSETTS 01581 USA

CONTROL SUB-PANEL #1 ASSEMBLY
MODEL TCU-1100P
GN2 THERMAL CONDITIONING UNIT

CAD FILE NO.	SIZE	DWG. NO.	REV.
8093153E	D	8093153	E

SCALE 1/2" = 1" SHEET –

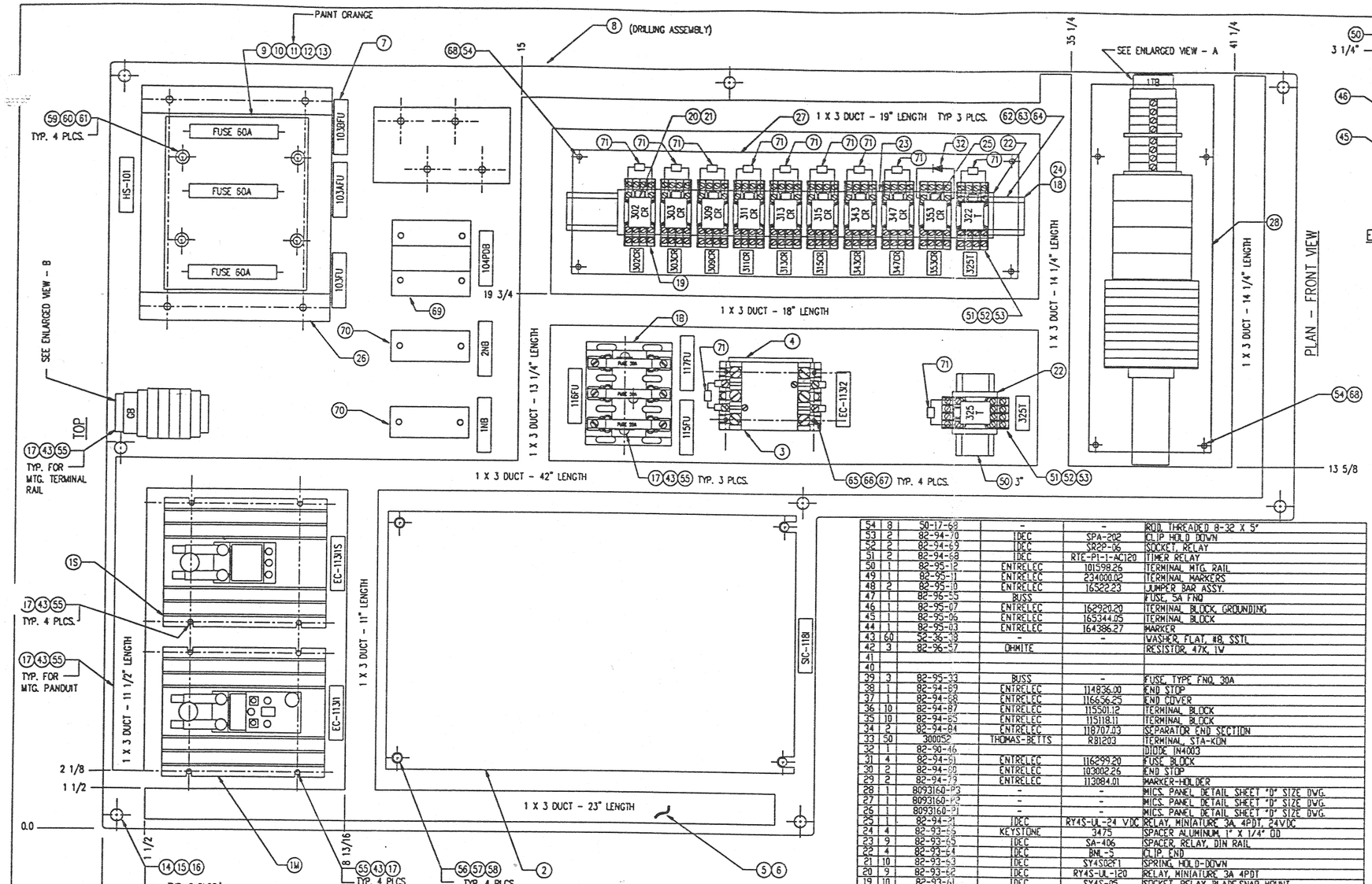

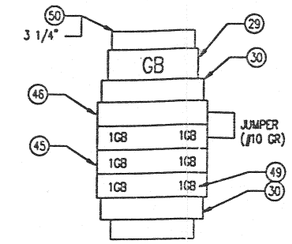

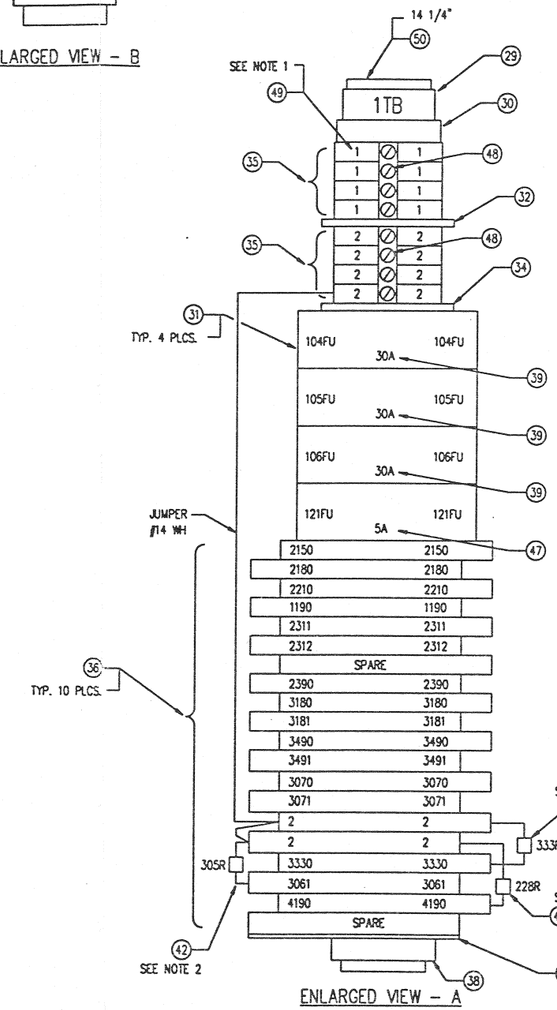

NOTES:
1. LABEL BOTH SIDES OF TERMINAL BLOCK
2. APPLY HEAT SHRINK TUBING TO RESISTOR LEADS.
3. OFF-SET TERMINAL REPRESENTS DOUBLE DECK TYPE.
   -TOP LEVEL
   -BOTTOM LEVEL
4. FOR SV-110,115,120: TERMINATE SUPPRESSOR AT SOLENOID.

ITEM	QTY	PSI #	MANUFACTURER	MAN. PART #	DESCRIPTION
71	15	300013			SURGE SUPPRESSOR
70	2	82-95-28	ALLEN-BRADLEY	1492-50YF	POWER DISTRIBUTION BLOCK
69	1	82-95-27	ALLEN-BRADLEY	1492-PB3141	POWER DISTRIBUTION BLOCK
68	24	52-06-41	-	-	NUT, HEX, 8-32, SSTL
67	4	52-16-21	-	-	WASHER, LOCK, #10, SSTL
66	4	52-36-39	-	-	WASHER, FLAT, #10, SSTL
65	4	52-12-99	-	-	SCREW, 10-32 X 3/4"
64	3	52-16-41	-	-	WASHER, LOCK, #6, SSTL
63	3	52-35-52	-	-	WASHER, FLAT, #6, SSTL
62	3	52-50-31	-	-	SCREW, 6-32 X 5/8"
61	8	52-16-20	-	-	WASHER, LOCK, 1/4, SSTL
60	8	52-36-94	-	-	WASHER, FLAT, 1/4, SSTL
59	8	52-13-69	-	-	SCREW, 1/4-20 X 1 1/2"
58	4	52-16-42	-	-	WASHER, LOCK, 5/16, SSTL
57	4	52-35-06	-	-	WASHER, FLAT, 5/16, SSTL
56	4	52-12-98	-	-	SCREW, 5/16-18 X 1"
55	60	52-16-19	-	-	WASHER, LOCK, #8, SSTL

ITEM	QTY	PSI #	MANUFACTURER	MAN. PART #	DESCRIPTION
54	8	50-17-69	-	-	ROD, THREADED 8-32 X 5"
53	2	82-94-70	IDEC	SPA-202	CLIP HOLD DOWN
52	2	82-94-69	IDEC	SR2P-06	SOCKET, RELAY
51	2	82-94-68	IDEC	RTE-P1-1-AC120	TIMER RELAY
50	1	82-95-12	ENTRELEC	101598.26	TERMINAL MTG. RAIL
49	1	82-95-11	ENTRELEC	234000.02	TERMINAL MARKERS
48	2	82-95-10	ENTRELEC	1652223	JUMPER BAR ASSY.
47	1	82-96-55	BUSS		FUSE, 5A FNQ
46	1	82-95-07	ENTRELEC	162220.20	TERMINAL BLOCK, GROUNDING
45	1	82-95-06	ENTRELEC	165344.05	TERMINAL BLOCK
44	1	82-95-03	ENTRELEC	164386.27	MARKER
43	60	52-36-38	-	-	WASHER, FLAT, #8, SSTL
42	3	82-96-57	OHMITE		RESISTOR, 47K, 1W
41					
40					
39	3	82-95-33	BUSS	-	FUSE, TYPE FNQ, 30A
38	1	82-94-89	ENTRELEC	114836.00	END STOP
37	1	82-94-88	ENTRELEC	116636.25	END COVER
36	10	82-94-87	ENTRELEC	115501.12	TERMINAL BLOCK
35	10	82-94-85	ENTRELEC	115118.11	TERMINAL BLOCK
34	2	82-94-84	ENTRELEC	118707.03	SEPARATOR END SECTION
33	50	300052	THOMAS-BETTS	R81203	TERMINAL, STA-KON
32	1	82-90-46			DIODE IN4003
31	4	82-94-61	ENTRELEC	116299.20	FUSE BLOCK
30	2	82-94-80	ENTRELEC	103002.26	END STOP
29	2	82-94-79	ENTRELEC	113084.01	MARKER-HOLDER
28	1	8093160-P3	-	-	MISC. PANEL DETAIL SHEET "D" SIZE DWG.
27	1	8093160-P2	-	-	MISC. PANEL DETAIL SHEET "D" SIZE DWG.
26	1	8093160-P1	-	-	MISC. PANEL DETAIL SHEET "D" SIZE DWG.
25	1	82-94-21	IDEC	RY4S-UL-24 VDC	RELAY, MINIATURE 3A, 4PDT, 24VDC
24	4	82-93-65	KEYSTONE	3475	SPACER ALUMINUM, 1" X 1/4" OD
23	9	82-93-63	IDEC	SA-406	SPACER, RELAY, DIN RAIL
22	4	82-93-64	IDEC	BNL-5	CLIP END
21	10	82-93-53	IDEC	SY4S02F1	SPRING, HOLD-DOWN
20	9	82-93-62	IDEC	RY4S-UL-120	RELAY, MINIATURE 3A 4PDT
19	10	82-93-61	IDEC	SY4S-05	SOCKET, RELAY BLADE,SNAP MOUNT
18	1	82-93-60	IDEC	BND-1000	RAIL MOUNTING DIN SCREW MOUNT
17	60	52-12-97	-	-	SCREW, 8-32 X 3/4, SSTL
16	8	52-16-22	-	-	WASHER, LOCK, 3/8, SSTL
15	8	52-35-16	-	-	WASHER, FLAT, 3/8, SSTL
14	8	52-10-59	-	-	BOLT, 3/8-16 X 1" SSTL
13	3	300051	BUSS	KTN-R-60	FUSE, FAST ACTING 60A
12	1	82-93-73	WESTINGHOUSE	504C323G03	HANDLE EXTERNAL OPERATING
11	1	82-93-72	WESTINGHOUSE	2607D65G02	SHAFT, EXTRA LONG, 10" TO 14-1/8"
10	1	82-93-71	WESTINGHOUSE	1226G94G03	KIT FUSE CLIPS FOR CLASS "R" FUSES
9	1	82-93-70	WESTINGHOUSE	2607D63G05	DISCONNECT SWITCH 60 AMP 250V
8	REF	8093159	-	-	POWER PANEL DRILLING "D" SIZE DWG.
7	REF	8093169	-	-	NAMEPLATE DETAILS "D" SIZE DWG.
6	3	81-80-42	PANDUIT	C1LG6	COVER WIREWAY LIGHT GRAY 1" W, STYLE-E
5	3	81-80-41	PANDUIT	E1X3LG6	WIREWAY LIGHT GRAY 1" W X 3" H
4	1	82-93-68	SQUARE D	9999D20	CONTACT AUXILIARY 2 NO.
3	1	82-94-06	SQUARE D	8910DPA43V02	CONTACTOR DEFINITE PURPOSE 50A
2	1	3S42-1591-P1	G.E.	6VAF3230108	CONTROLLER ADJUSTABLE FREQUENCY
1	1	3S42-1593-P1	CONTROL-CONCEPTS	3020-24-40	CONTROLLER SCR POWER

REFERENCE DRAWINGS	
8093160	MISC. PANEL DETAIL
8093151	CONTROL CONSOLE ASSEMBLY

REV	DATE	DEO NO.	REVISIONS	BY	AP.
C	1/18/94	164	REVISED	GHD	
B	11/3/93	126	REVISED	GHD	AG,RFB
A	5/12/93	044	ISSUED FOR FABRICATION	GHD	AG,KW
0	3/22/93	022	ISSUED FOR REVIEW	GHD	

UNLESS OTHERWISE SPECIFIED
DIMENSIONS ARE IN INCHES
TOLERANCES:
FRACTIONAL ±
ANGULAR:MACH ± 0-30' BEND ±
TWO PLACE DECIMAL ±
THREE PLACE DECIMAL ±
FINISHED SURFACE RMS
BREAK CORNERS IN OUT
REMOVE ALL BURRS
DO NOT SCALE THIS DRAWING
USED ON TCU-1100P
NEXT ASSY. D8093153

PROPRIETARY AND CONFIDENTIAL
EXCEPT AS OTHERWISE AGREED IN WRITING, THE INFORMATION AND DESIGN DISCLOSED HEREIN ARE THE PROPERTY OF PROCESS SYSTEMS INTERNATIONAL AND MUST NOT BE COPIED OR DISTRIBUTED OUTSIDE PSI EXCEPT TO AUTHORIZED PERSONS WITH A GENUINE NEED TO KNOW AND BY THE USE HEREOF ACKNOWLEDGE PSI OWNERSHIP AND AGREE TO MAINTAIN THIS INFORMATION AND DESIGN IN STRICT CONFIDENCE.

ORIGINAL ISSUE

DWN.	GLENN DAVIDSON	3-8-93
CHK'D.	WVB	3-22-93
CHK'R.	RFB	3-22-93
MFG.		
APVD.	THE	3-22-93

PROCESS SYSTEMS INTERNATIONAL INC.
20 WALKUP DR. WESTBOROUGH, MASSACHUSETTS 01581 USA

POWER SUB-PANEL ASSEMBLY
MODEL TCU-1100P
GN2 THERMAL CONDITIONING UNIT

CAD FILE NO.	SIZE	DWG. NO.	REV.
8093154C	D	8093154	C

SCALE 1/2" = 1" SHEET -

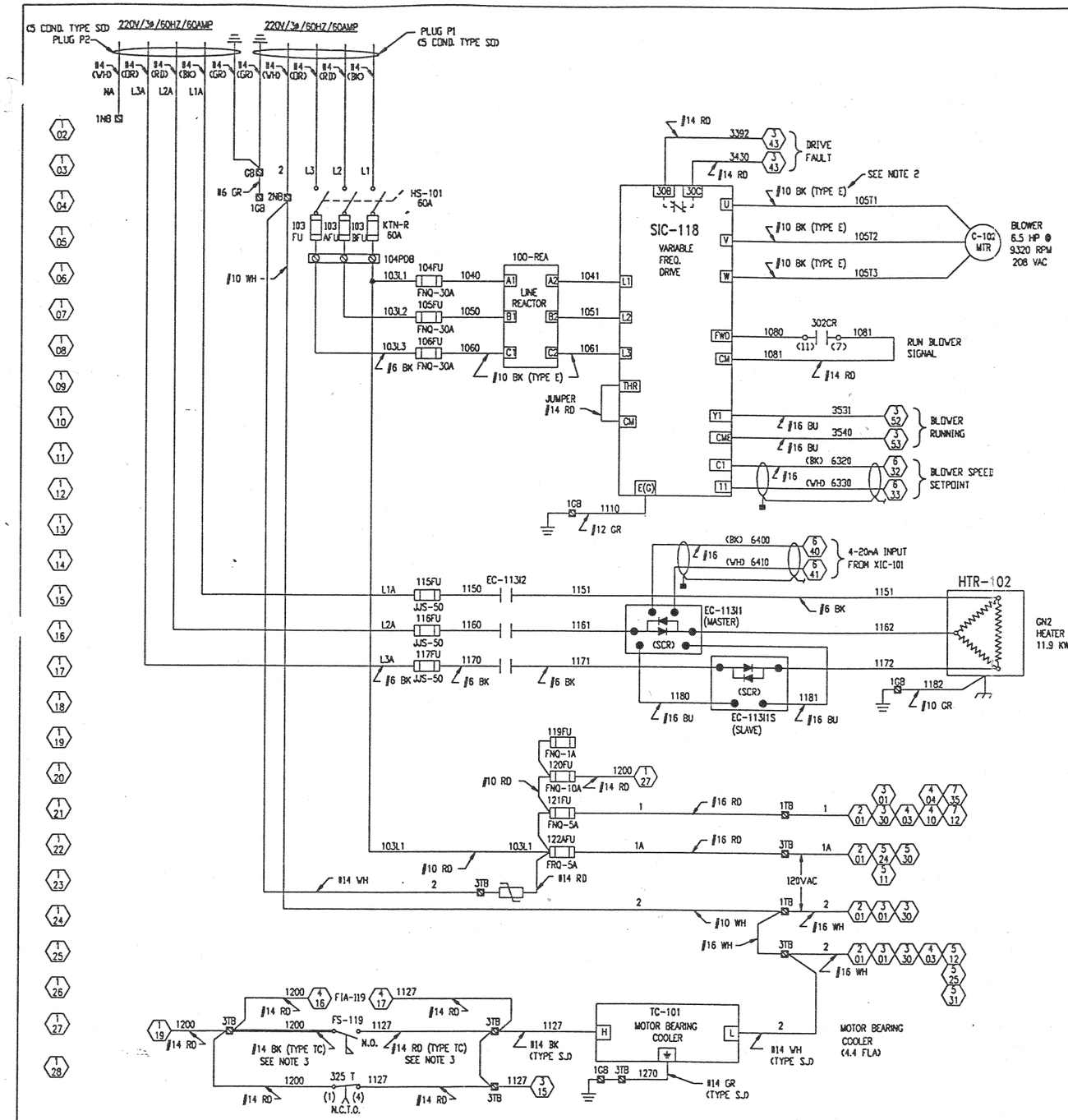

NOTES:

1. ALL WIRES TO BE TYPE THHN UNLESS OTHERWISE SPECIFIED.
2. C-102 MTR WIRES TO BE TEFLON INSULATED, TYPE E.
3. FS-119 CABLE: #14 TYPE TC

ELECTRICAL SCHEMATIC SYMBOLS

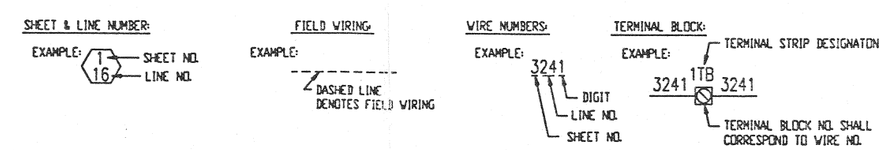

REV	DATE	DEO NO.	REVISIONS	BY	AP.
G	1.9.97	006	AS BUILT	GHD	
F	9.20.96	003	REVISED	GHD	AFG
E	3-22-94	193	REVISED	GHD	AFG,RFB
D	3-15-94	187	REVISED	GHD	AFG,RFB
C	1-18-94	164	REVISED	GHD	AFG,RFB
B	11-8-93	126	REVISED	GHD	AFG,RFB
A	5-14-93	044	ISSUED FOR FABRICATION	GHD	AFG,RFB
0	3-22-93	022	ISSUED FOR REVIEW	GHD	

REFERENCE DRAWINGS

UNLESS OTHERWISE SPECIFIED
DIMENSIONS ARE IN INCHES
TOLERANCES:
FRACTIONAL ±
ANGULAR:MACH ± 0-30° BEND ±
TWO PLACE DECIMAL ±
THREE PLACE DECIMAL ±
FINISHED SURFACE RMS
BREAK CORNERS: IN OUT
REMOVE ALL BURRS
DO NOT SCALE THIS DRAWING
USED ON: 1100P
NEXT ASSY. D8093150

PROPRIETARY AND CONFIDENTIAL
EXCEPT AS OTHERWISE AGREED IN WRITING, THE INFORMATION AND DESIGN DISCLOSED HEREIN ARE THE PROPERTY OF PROCESS SYSTEMS INTERNATIONAL AND MUST NOT BE COPIED OR DISTRIBUTED OUTSIDE PSI EXCEPT TO AUTHORIZED PERSONS WITH A GENUINE NEED TO KNOW WHO BY THE USE HEREOF ACKNOWLEDGE PSI OWNERSHIP AND AGREE TO MAINTAIN THIS INFORMATION AND DESIGN IN STRICT CONFIDENCE.

ORIGINAL ISSUE

DWN.	GLENN DAVIDSON	3-8-93
CHK'D.	VVB	3-22-93
ENGR.	RFB	3-22-93
MFG.		
APVD.	TKS	3-22-93

PROCESS SYSTEMS INTERNATIONAL INC.
20 WALKUP DR. WESTBOROUGH, MASSACHUSETTS 01581 USA

ELECTRICAL SCHEMATIC
POWER DISTRIBUTION
MODEL TCU-1100P
GN2 THERMAL CONDITIONING UNIT

CAD FILE NO. 93161G01 | SIZE D | DWG NO. 8093161 | REV. G
SCALE NONE | SHEET 1 OF 7

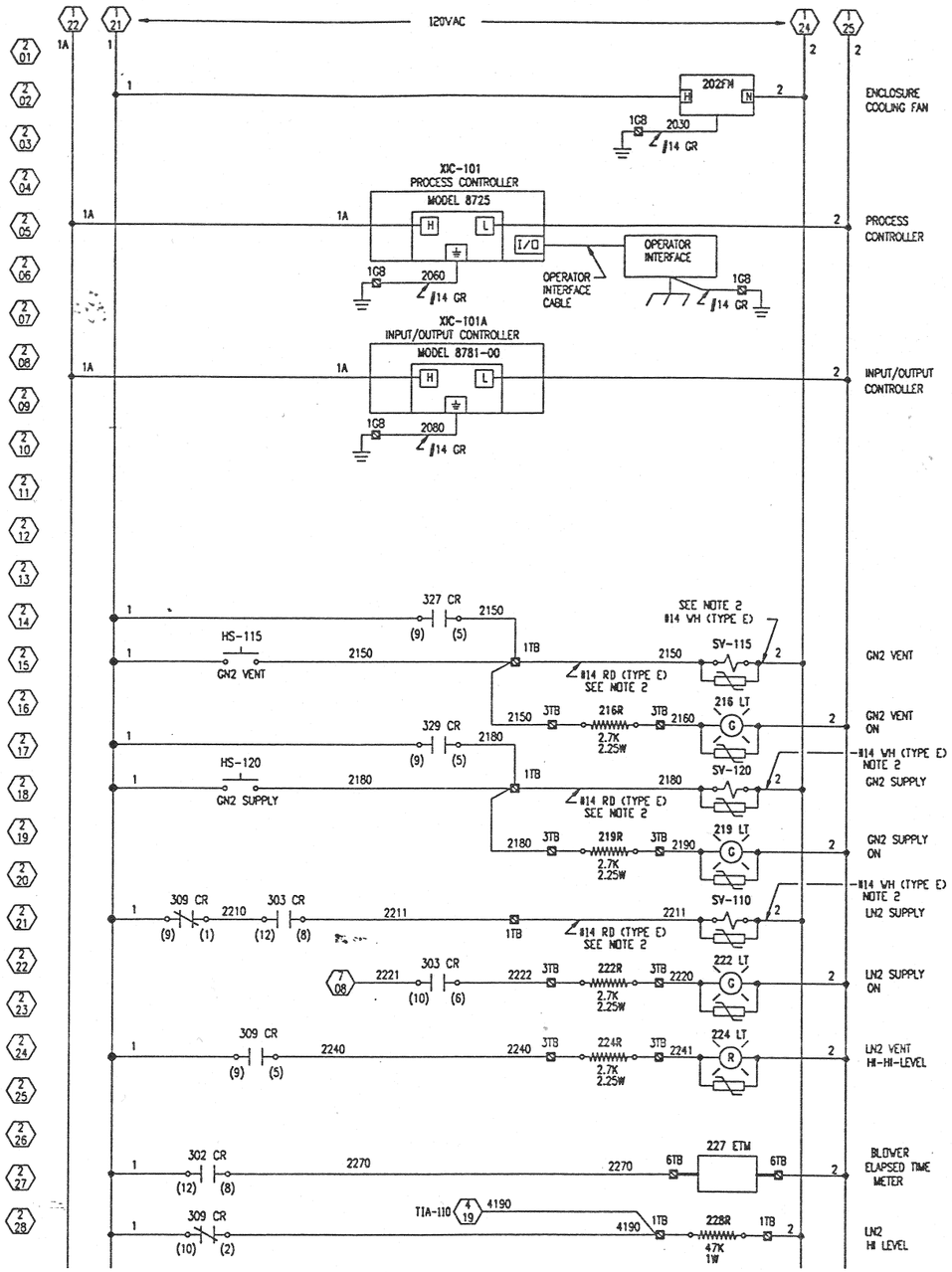

NOTES:

1. REF. SHEET 1 FOR LEGENDS OF SYMBOLS USED ON THIS DRAWING.
2. ALL WIRES TO BE #14 RD THHN, UNLESS OTHERWISE SPECIFIED.
3. SOLENOID WIRE TO BE #14 TEFLON INSULATED, TYPE E.
4. VALVE STEM HTR WIRES TO BE #18 TEFLON INSULATED, TYPE E.
5. ALL WIRES TO FRONT OPERATORS PANEL, TO BE #16 MTW

REV	DATE	DEO NO.	REVISIONS	BY	AP.
G			SEE SHT 1		
F			SEE SHT 1		
E			SEE SHT 1		
D			SEE SHT 1		
C			SEE SHT 1		
B			SEE SHT 1		
A	5-12-93	044	ISSUED FOR FABRICATIONN		
0	3-22-93	022	ISSUED FOR REVIEW		

REFERENCE DRAWINGS

UNLESS OTHERWISE SPECIFIED
DIMENSIONS ARE IN INCHES
TOLERANCES:
FRACTIONAL ±
ANGULAR/MACH ± 0-30° BEND ±
TWO PLACE DECIMAL ±
THREE PLACE DECIMAL ±
FINISHED SURFACE RMS
BREAK CORNERS IN OUT
REMOVE ALL BURRS
DO NOT SCALE THIS DRAWING
USED ON 1100P
NEXT ASSY. D8093150

PROPRIETARY AND CONFIDENTIAL
EXCEPT AS OTHERWISE ALLOWED IN WRITING, THE INFORMATION AND DESIGN DISCLOSED HEREIN ARE THE PROPERTY OF PROCESS SYSTEMS INTERNATIONAL AND MUST NOT BE COPIED OR DISTRIBUTED OUTSIDE PSI EXCEPT TO AUTHORIZED PERSONS WITH A GENUINE NEED TO KNOW WHO BY THE USE HEREOF ACKNOWLEDGE PSI OWNERSHIP AND AGREE TO MAINTAIN THIS INFORMATION AND DESIGN IN STRICT CONFIDENCE.

ORIGINAL ISSUE

DWN.	GLENN DAVIDSON	3-8-93
CHK'D.	AFG	3-22-93
ENGR.	RFB	3-22-93
MFG.		
APVD.	TMS	3-22-93

PROCESS SYSTEMS INTERNATIONAL INC.
20 WALKUP DR. WESTBOROUGH, MASSACHUSETTS 01581 USA

ELECTRICAL SCHEMATIC
120VAC WIRING
MODEL TCU-1100P
GN2 THERMAL CONDITIONING UNIT

CAD FILE NO.	SIZE	DWG. NO.	REV.
93161G02	D	8093161	G

SCALE NONE — SHEET 2 OF 7

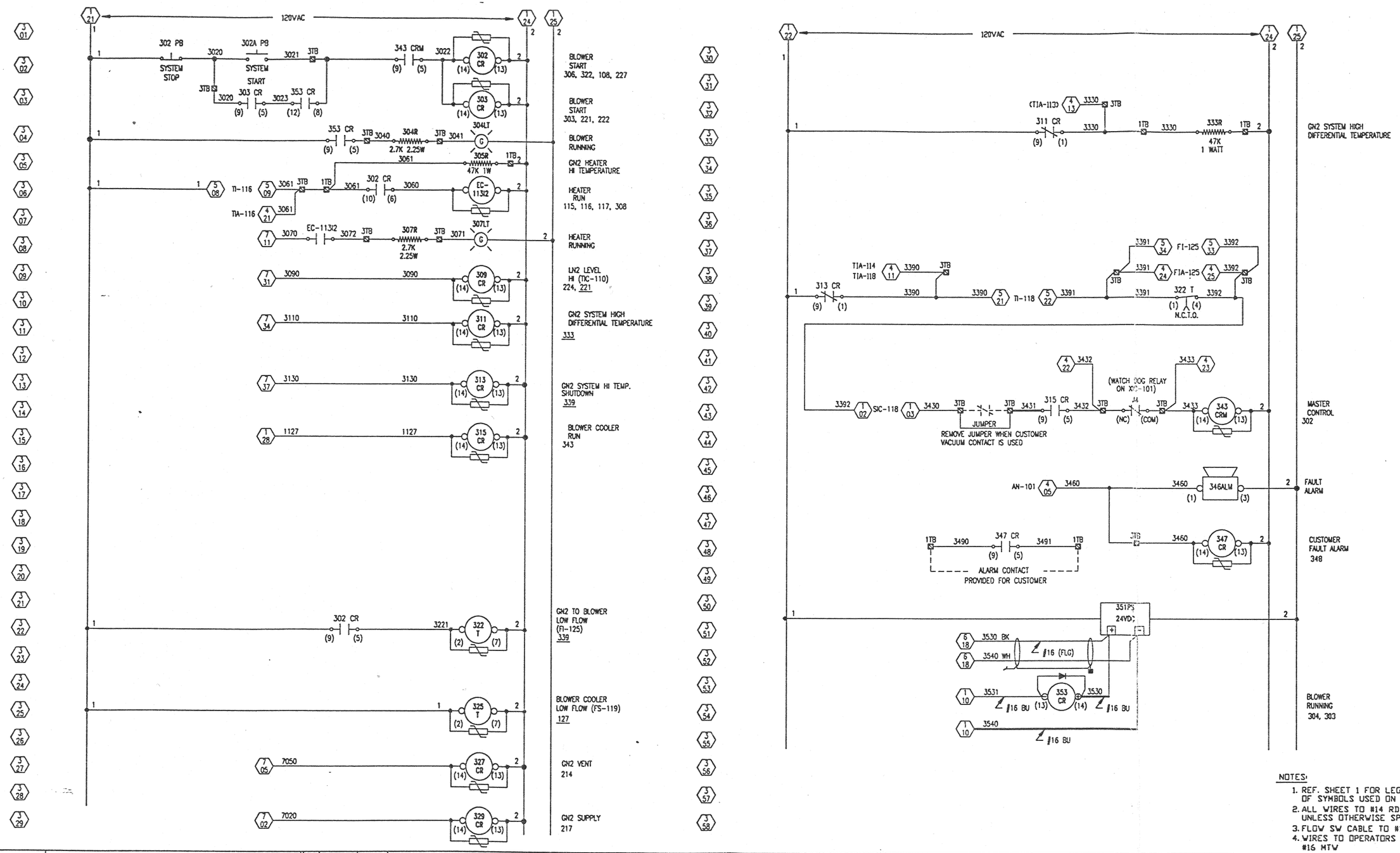

NOTES:

1. REF. SHEET 1 FOR LEGENDS OF SYMBOLS USED ON THIS DRAWING.
2. ALL WIRES TO #14 RD THHN, UNLESS OTHERWISE SPECIFIED.
3. FLOW SW CABLE TO #14 TYPE TC.
4. WIRES TO OPERATORS PANEL TO BE #16 MTW

REV	DATE	DEO NO.	REVISIONS	BY	AP.
G			SEE SHT 1		
F			SEE SHT 1		
E			SEE SHT 1		
D			SEE SHT 1		
C			SEE SHT 1		
B			SEE SHT 1		
A	5-12-93	044	ISSUED FOR FABRICATION		
0	3-22-93	022	ISSUED FOR REVIEW		

REFERENCE DRAWINGS

UNLESS OTHERWISE SPECIFIED
DIMENSIONS ARE IN INCHES
TOLERANCES:
FRACTIONAL ±
ANGULAR/MACH ± 0-30' BEND ±
TWO PLACE DECIMAL ±
THREE PLACE DECIMAL ±
FINISHED SURFACE RMS
BREAK CORNERS: IN OUT
REMOVE ALL BURRS
DO NOT SCALE THIS DRAWING
USED ON: 1100S
NEXT ASSY. D8093150

PROPRIETARY AND CONFIDENTIAL
EXCEPT AS OTHERWISE AGREED IN WRITING, THE INFORMATION AND DESIGN DISCLOSED HEREIN ARE THE PROPERTY OF PROCESS SYSTEMS INTERNATIONAL AND MUST NOT BE COPIED OR DISTRIBUTED OUTSIDE PSI EXCEPT TO AUTHORIZED PERSONS WITH A GENUINE NEED TO KNOW AND BY THE USE HEREOF ACKNOWLEDGE PSI OWNERSHIP AND AGREE TO MAINTAIN THIS INFORMATION AND DESIGN IN STRICT CONFIDENCE.

ORIGINAL ISSUE

DWN.	GLENN DAVIDSON	3-8-93
CHK'D.	AFG	3-22-93
ENGR.	RFB	3-22-93
MFG.		
APVD.	TRS	3-22-93

PROCESS SYSTEMS INTERNATIONAL INC.
20 WALKUP DR. WESTBOROUGH, MASSACHUSETTS 01581 USA

ELECTRICAL SCHEMATIC
CONTROL WIRING
MODEL TCU-1100P
GN2 THERMAL CONDITIONING UNIT

CAD FILE NO.	SIZE	DWG. NO.	REV.
93161G03	D	8093161	G

SCALE NONE — SHEET 3 OF 7

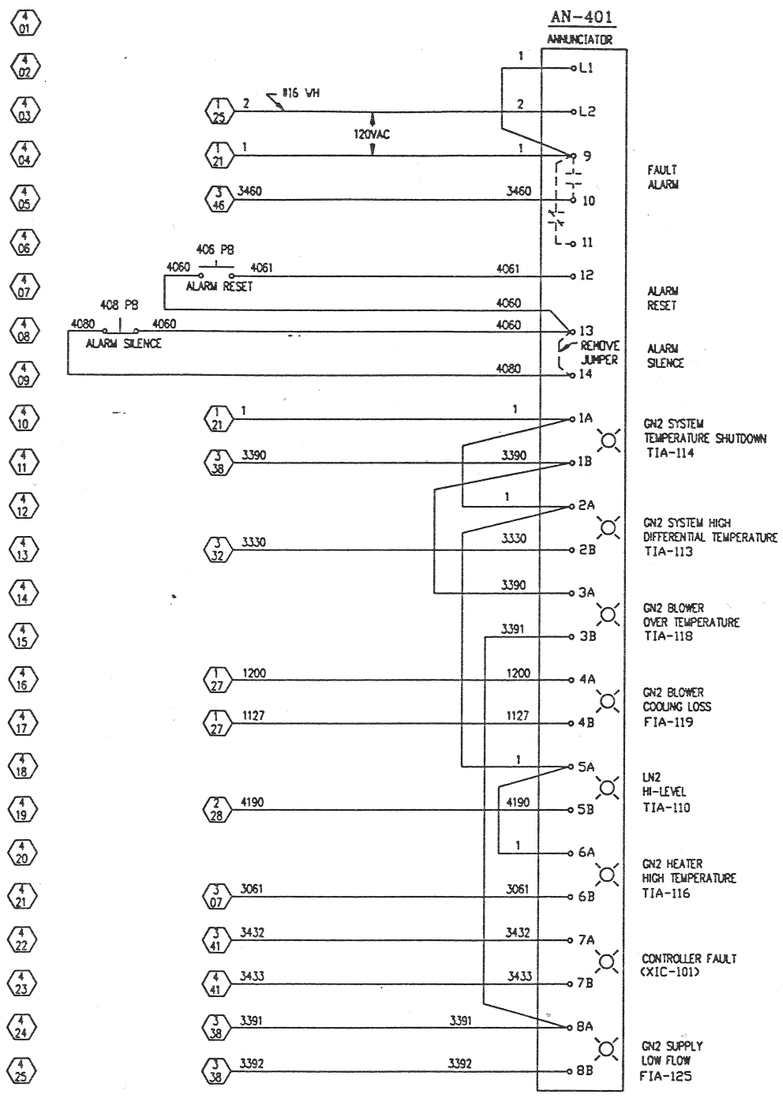

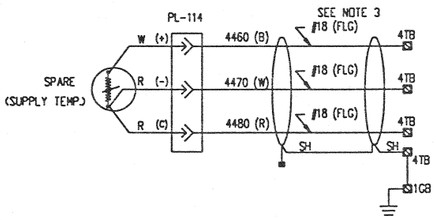

NOTE:

1. REF. SHEET 1 FOR LEGENDS OF SYMBOLS USED ON THIS DRAWING
2. ALL WIRES TO #14 RD THHN, UNLESS OTHERWISE SPECIFIED.
3. ALL RTD WIRES TO #18 FLUORO-GEN INSULATION (FLG).
4. ALL WIRES TO OPERATOR PANEL TO BE #16 RD HTV, UNLESS OTHERWISE SPECIFIED.

REV	DATE	DCO NO.	REVISIONS	BY	AP.
G			SEE SHT 1		
F			SEE SHT 1		
E			SEE SHT 1		
D			SEE SHT 1		
C			SEE SHT 1		
B			SEE SHT 1		
A	5-12-93	044	ISSUED FOR FABRICATION		
0	3-22-93	022	ISSUED FOR REVIEW		

REFERENCE DRAWINGS

UNLESS OTHERWISE SPECIFIED
DIMENSIONS ARE IN INCHES
TOLERANCES:
FRACTIONAL ±
ANGULAR:MACH ± 0-30' BEND ±
TWO PLACE DECIMAL ±
THREE PLACE DECIMAL ±
FINISH:ALL SURFACE RMS
BREAK CORNERS: .04 OUT
REMOVE ALL BURRS

DO NOT SCALE THIS DRAWING

USED ON 1100P
NEXT ASSY. D8093150

PROPRIETARY AND CONFIDENTIAL
EXCEPT AS OTHERWISE AGREED IN WRITING, THE INFORMATION AND DESIGN DISCLOSED HEREIN ARE THE PROPERTY OF PROCESS SYSTEMS INTERNATIONAL INC. JUST NOT BE COPIED OR DISTRIBUTED OUTSIDE PSI EXCEPT TO AUTHORIZED PERSONS WITH A GENUINE NEED TO KNOW INFO BY THE USE HEREOF ACKNOWLEDGE PSI OWNERSHIP AND AGREE TO MAINTAIN THIS INFORMATION AND DESIGN IN STRICT CONFIDENCE.

ORIGINAL ISSUE		
DRWN.	CLEON BOUNSIRI	3-8-93
CHKD.	AFG	3-22-93
ENGR.	BFB	3-22-93
MFG.		
APVD.	THS	3-22-93

PROCESS SYSTEMS INTERNATIONAL INC.
20 WALKUP DR. WESTBOROUGH, MASSACHUSETTS 01581 USA

ELECTRICAL SCHEMATIC
AN-401(ANNUCIATOR) / TI-114(TEMP. INDICATOR)
MODEL TCU-1100P
GN2 THERMAL CONDITIONING UNIT

CAD FILE NO. 93161G04 | SIZE D | DWG. NO. 8093161 | REV. g
SCALE NONE | SHEET 4 OF 7

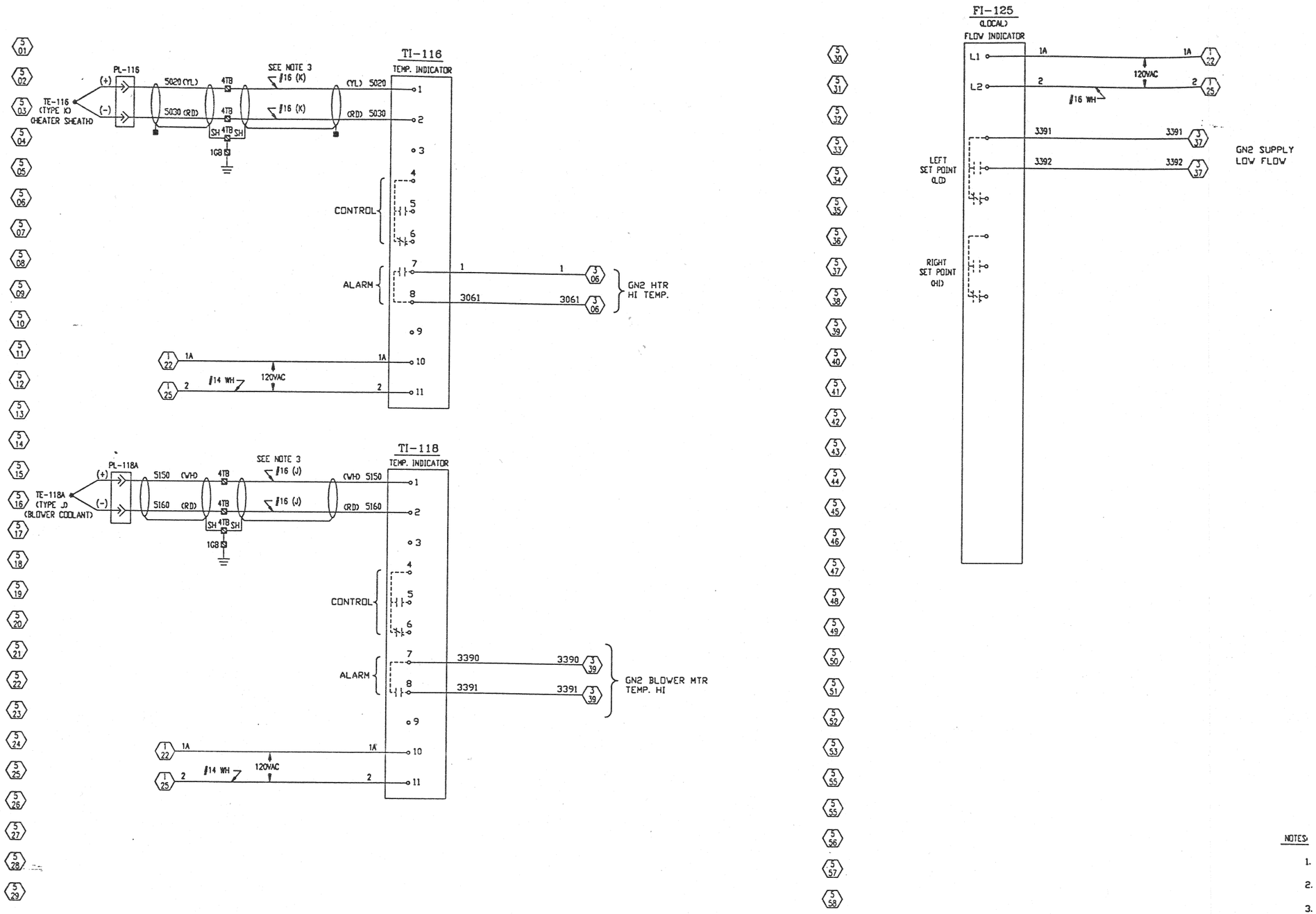

NOTES:

1. REF. SHEET 1 FOR LEGENDS OF SYMBOLS USED ON THIS DRAWING.
2. ALL WIRES TO BE #14 RD THHN, UNLESS OTHERWISE SPECIFIED.
3. THERMOCOUPLE WIRE TO BE TEFLON INSULATED.
4. ALL WIRES TO OPERATOR PANEL TO BE #16 RD MTW, UNLESS OTHERWISE SPECIFIED.

REV	DATE	DEO NO.	REVISIONS	BY	AP.
G			SEE SHT 1		
F			SEE SHT 1		
E			SEE SHT 1		
D			SEE SHT 1		
C			SEE SHT 1		
B			SEE SHT 1		
A	5-12-93	044	ISSUED FOR FABRICATION		
0	3-22-93	022	ISSUED FOR REVIEW		

REFERENCE DRAWINGS

UNLESS OTHERWISE SPECIFIED
DIMENSIONS ARE IN INCHES
TOLERANCES:
FRACTIONAL ±
ANGULAR/MACH ± 0-30' BEND 2
TWO PLACE DECIMAL ±
THREE PLACE DECIMAL ±
FINISHED SURFACE RMS
BREAK CORNERS IN OUT
REMOVE ALL BURRS

DO NOT SCALE THIS DRAWING

USED ON 1100P
NEXT ASSY. D8093150

PROPRIETARY AND CONFIDENTIAL

EXCEPT AS OTHERWISE AGREED IN WRITING, THE INFORMATION AND DESIGN DISCLOSED HEREIN ARE THE PROPERTY OF PROCESS SYSTEMS INTERNATIONAL AND MUST NOT BE COPIED OR DISTRIBUTED OUTSIDE PSI EXCEPT TO AUTHORIZED PERSONS WITH A GENUINE NEED TO KNOW WHO BY THE USE HEREOF ACKNOWLEDGE PSI OWNERSHIP AND AGREE TO MAINTAIN THIS INFORMATION AND DESIGN IN STRICT CONFIDENCE.

ORIGINAL ISSUE

DWN.	GLENN DAVIDSON	3-8-93
CHK'D.	AFG	3-22-93
ENGR.	BFB	3-22-93
MFG.		
APVD.	TRS	3-22-93

PROCESS SYSTEMS INTERNATIONAL INC.
20 WALKUP DR. WESTBOROUGH, MASSACHUSETTS 01581 USA

ELECTRICAL SCHEMATIC
TI-116(TEMP. INDICATOR) / TI-118(TEMP. INDICATOR)
MODEL TCU-1100P
GN2 THERMAL CONDITIONING UNIT

CAD FILE NO.	SIZE	DWG. NO.	REV.
93161G05	D	8093161	G

SCALE NONE
SHEET 5 OF 7

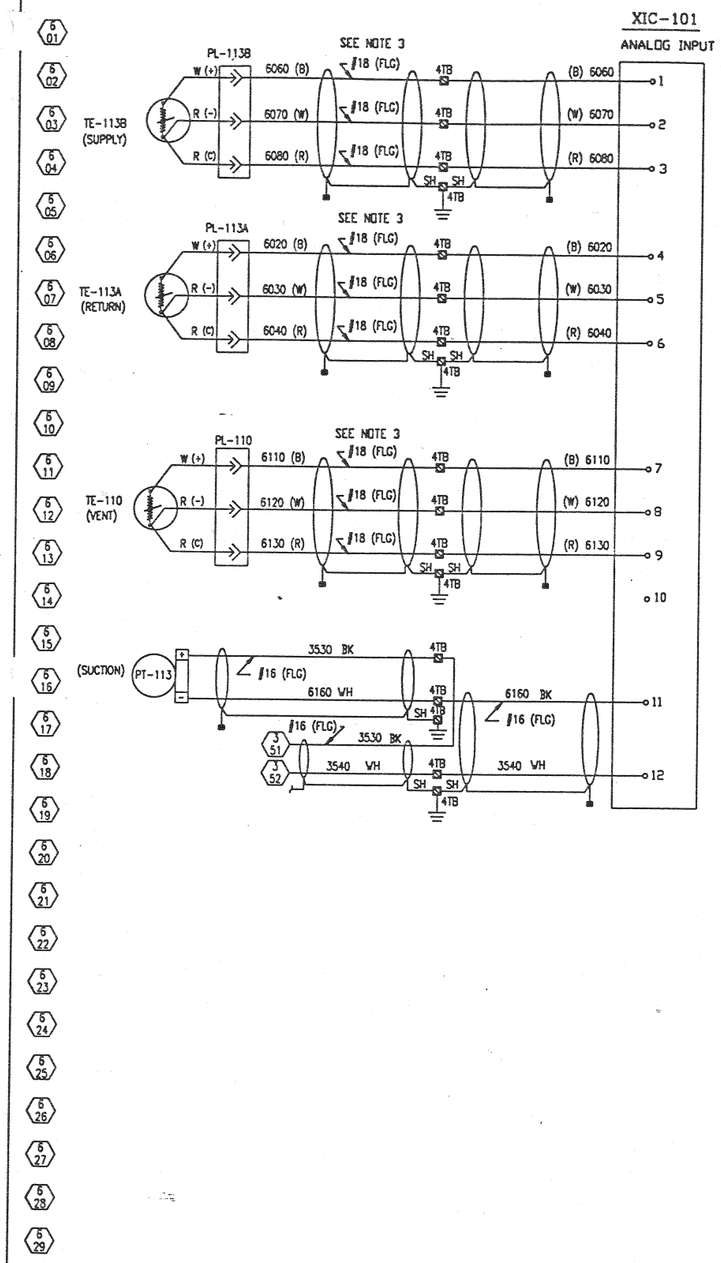

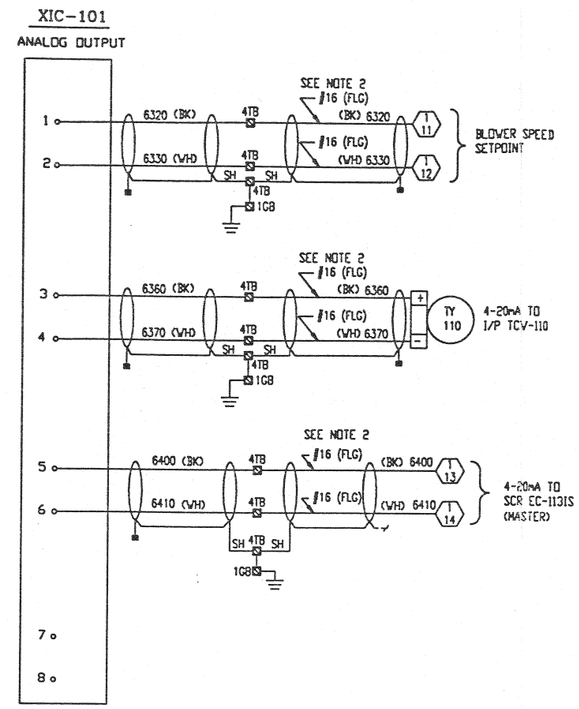

NOTES:

1. REF. SHEET 1 FOR LEGENDS OF SYMBOLS USED ON THIS DRAWING.
2. ALL 4-20mA CABLE TO FLOURO-GEN INSULATED (FLG).
3. ALL RTD CABLE TO FLOURO-GEN INSULATED (FLG).

REFERENCE DRAWINGS	REV	DATE	DEO NO.	REVISIONS	BY	AP.
	G			SEE SHT 1		
	F			SEE SHT 1		
	E			SEE SHT 1		
	D			SEE SHT 1		
	C			SEE SHT 1		
	B			SEE SHT 1		
	A	5-12-93	044	ISSUED FOR FABRICATION		
	D	3-22-93	022	ISSUED FOR REVIEW		

UNLESS OTHERWISE SPECIFIED
DIMENSIONS ARE IN INCHES
TOLERANCES:
FRACTIONAL ±
ANGULAR:MACH ± 0-30' BEND ±
TWO PLACE DECIMAL ±
THREE PLACE DECIMAL ±
FINISHED SURFACE RMS
BREAK CORNERS IN OUT
REMOVE ALL BURRS

DO NOT SCALE THIS DRAWING

USED ON 1100P
NEXT ASSY. D8093150

PROPRIETARY AND CONFIDENTIAL
EXCEPT AS OTHERWISE AGREED IN WRITING, THE INFORMATION AND DESIGN DISCLOSED HEREIN ARE THE PROPERTY OF PROCESS SYSTEMS INTERNATIONAL AND MUST NOT BE COPIED OR DISTRIBUTED OUTSIDE PSI EXCEPT TO AUTHORIZED PERSONS WITH A GENUINE NEED TO KNOW WHO BY THE USE HEREOF ACKNOWLEDGE PSI OWNERSHIP AND AGREE TO MAINTAIN THIS INFORMATION AND DESIGN IN STRICT CONFIDENCE.

ORIGINAL ISSUE		
DWN.	GLENN DAVIDSON	3/18/93
CHK'D	RFG	3/22/93
ENGR.	RFB	3/22/93
MFG.		
APVD.	THS	3/22/93

PROCESS SYSTEMS INTERNATIONAL INC.
20 WALKUP DR. WESTBOROUGH, MASSACHUSETTS 01581 USA

ELECTRICAL SCHEMATIC
XIC-101 - ANALOG I/O SLOTS 1 & 2
MODEL TCU-1100P
GN2 THERMAL CONDITIONING UNIT

CAD FILE NO.	SIZE	DWG. NO.	REV.
93161G06	D	8093161	G

SCALE NONE — SHEET 6 OF 7

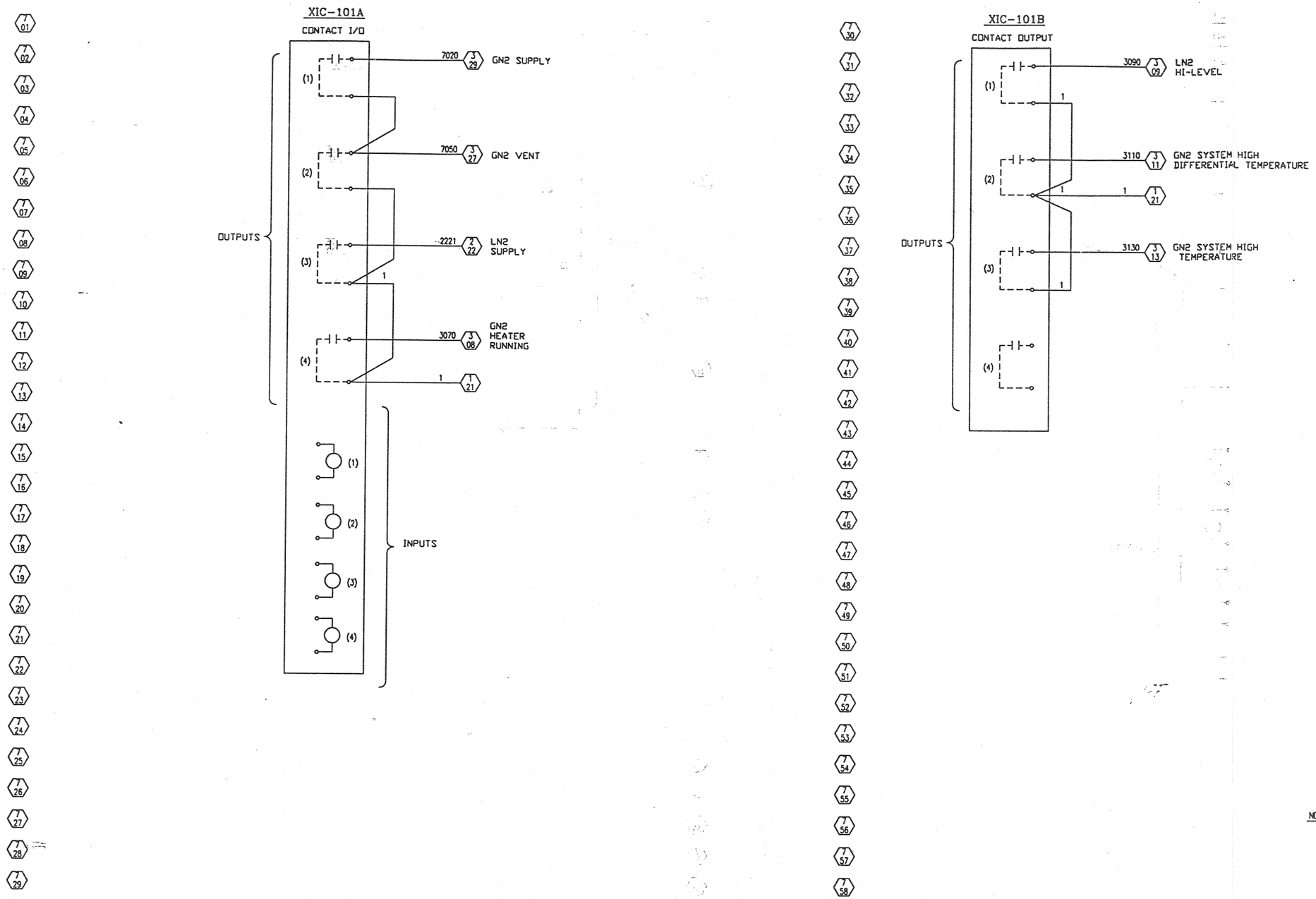

NOTES:

1. REF. SHEET 1 FOR LEGENDS OF SYMBOLS USED ON THIS DRAWING.
2. ALL WIREWS TO BE #14 RD THHN, UNLESS OTHERWISE SPECIFIED.

REFERENCE DRAWINGS

REV	DATE	DCO NO.	REVISIONS	BY	AP.
G			SEE SHT 1		
F			SEE SHT 1		
E			SEE SHT 1		
D			SEE SHT 1		
C			SEE SHT 1		
B			SEE SHT 1		
A	5-12-93	044	ISSUED FOR FABRICATION		
0	3-22-93	022	ISSUED FOR REVIEW		

UNLESS OTHERWISE SPECIFIED
DIMENSIONS ARE IN INCHES
TOLERANCES:
FRACTIONAL ±
ANGULAR:MACH ± 0-30' BEND ±
TWO PLACE DECIMAL ±
THREE PLACE DECIMAL ±
FINISHED SURFACE RMS
BREAK CORNERS: IN OUT
REMOVE ALL BURRS
DO NOT SCALE THIS DRAWING
USED ON 1100P
NEXT ASSY. D8093161

PROPRIETARY AND CONFIDENTIAL
EXCEPT AS OTHERWISE AGREED IN WRITING, THE INFORMATION AND DESIGN DISCLOSED HEREON ARE THE PROPERTY OF PROCESS SYSTEMS INTERNATIONAL AND MUST NOT BE COPIED OR DISTRIBUTED OUTSIDE PSI EXCEPT TO AUTHORIZED PERSONS WITH A GENUINE NEED TO KNOW WHO BY THE USE HEREOF ACKNOWLEDGE PSI OWNERSHIP AND AGREE TO MAINTAIN THIS INFORMATION AND DESIGN IN STRICT CONFIDENCE.

ORIGINAL ISSUE

DWN.	GLENN DAVIDSON	3/8/93
CHK'D.	AFG	3/22/93
ENGR.	RFB	3/22/93
MFG.		
APPR.	THS	3/22/93

PROCESS SYSTEMS INTERNATIONAL INC.
20 WALKUP DR. WESTBOROUGH, MASSACHUSETTS 01581 USA

ELECTRICAL SCHEMATIC
XIC-101 – CONTACT I/O SLOT #3
MODEL TCU-1100P
GN2 THERMAL CONDITIONING UNIT

CAD FILE NO.	SIZE	DWG. NO.	REV.
93161G07	D	8093161	G

SCALE NONE — SHEET 7 OF 7