NOTES:

1. ALL PARTITIONS ARE DIMENSIONED TO FACE OF PARTITION UNO
2. SEE A2-801 AND A2-802 FOR PARTITION TYPES
3. ALL HM DOOR FRAMES ARE 3" FROM NEAREST ADJACENT PARTITION WALL UNO
4. ALL CHAIN LINK DOOR FRAMES ARE 12" FROM NEAREST ADJACENT PARTITION WALL UNO
5. SEE SHEET G0-070 FOR WALL SYMBOLS

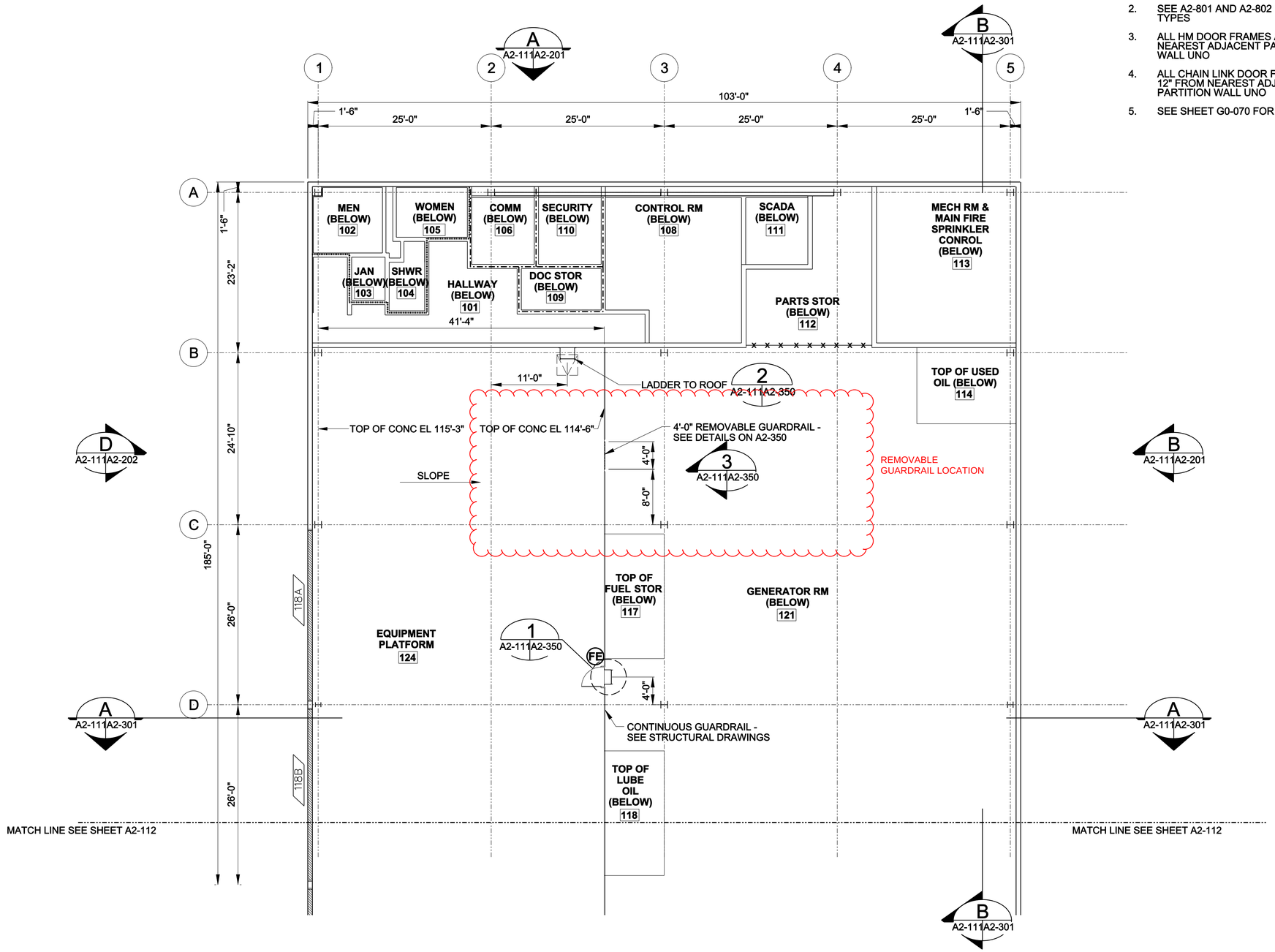

US Army Corps of Engineers
Baltimore District

REAL ESTATE DIVISION,
REAL PROPERTY SERVICES
FIELD OFFICE
ANNAPOLIS JUNCTION, MARYLAND

BLACK & VEATCH
Building a world of difference.

THE INFORMATION PROVIDED HEREIN IS THE PROPERTY OF THE UNITED STATES GOVERNMENT, IT IS PROVIDED ONLY FOR THE PURPOSE STATED IN THE ACCOMPANYING DOCUMENT; DISTRIBUTION OF THIS DOCUMENT OR ANY INFORMATION CONTAINED HEREIN IS LIMITED TO THE RECIPIENT SPECIFIED IN THE ACCOMPANYING DOCUMENT. REPRODUCTION OR DISTRIBUTION OF THIS DOCUMENT OR ANY INFORMATION CONTAINED HEREIN IN WHOLE OR IN PART IN ANY MEDIUM WITHOUT THE APPROVAL OF THE UNITED STATES GOVERNMENT IS STRICTLY PROHIBITED. VIOLATORS OF THIS DOCUMENT WILL BE PROSECUTED TO THE FULLEST EXTENT OF THE LAW.

ISSUED FOR CONSTRUCTION

ACTIVITY MANAGER:
DATE: 10-25-2011

Mark	Description	Date	Appr.

Designed by: TDH		Date: OCT 25, 2011	Rev. 0
Dwn by: MEH	Ckd by: DJT	Project No. 23051	
RSFO Project Manager Andrea de la Peña		Drawing Number: F-141-62-100	
Submitted by: John R. Hassed Project Manager		File name: 1023051-A2-111.dgn Plot date: 3/28/2012 Plot scale: 8	

MOUNTAINVIEW
Buckley AFB, Denver, CO

POWER PLANT
EQUIPMENT PLATFORM LEVEL
FLOOR PLAN 1 OF 2

Drawing No.
59865

Sheet Reference No.
A2-111
Sheet 64 of 329

1/8"=1'-0" 0 2' 4' 8' 16' 24'

UNCLASSIFIED//FOR OFFICIAL USE ONLY

...\DGN\1023051-A2-111.dgn

ket35561 3/28/2012 3:24:14 PM ...\XM\V8XM-PDF-Full.pltcfg
Z:\Projects\RSFO IDIQ\Mountainview\50.0 - Detailed Design\50.2 Graphics\DGN\1023051-A2-111.dgn

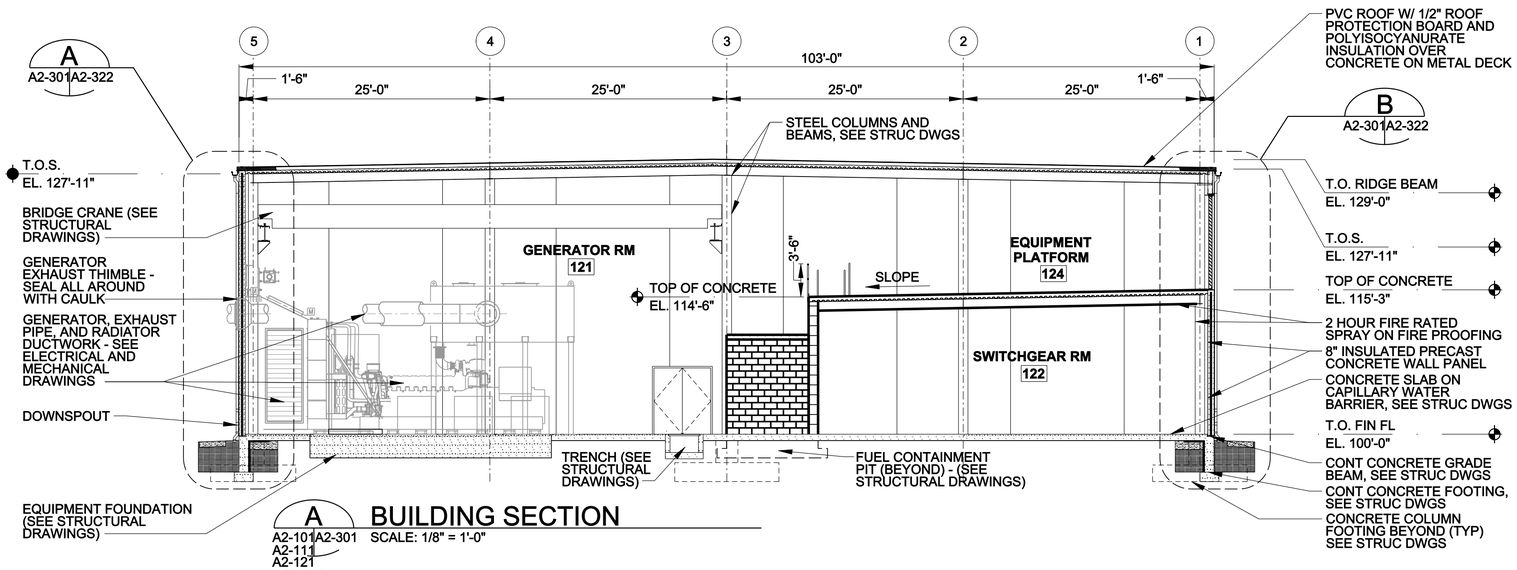

A BUILDING SECTION

A2-101A2-301
A2-111
A2-121
A2-151
A2-161

SCALE: 1/8" = 1'-0"

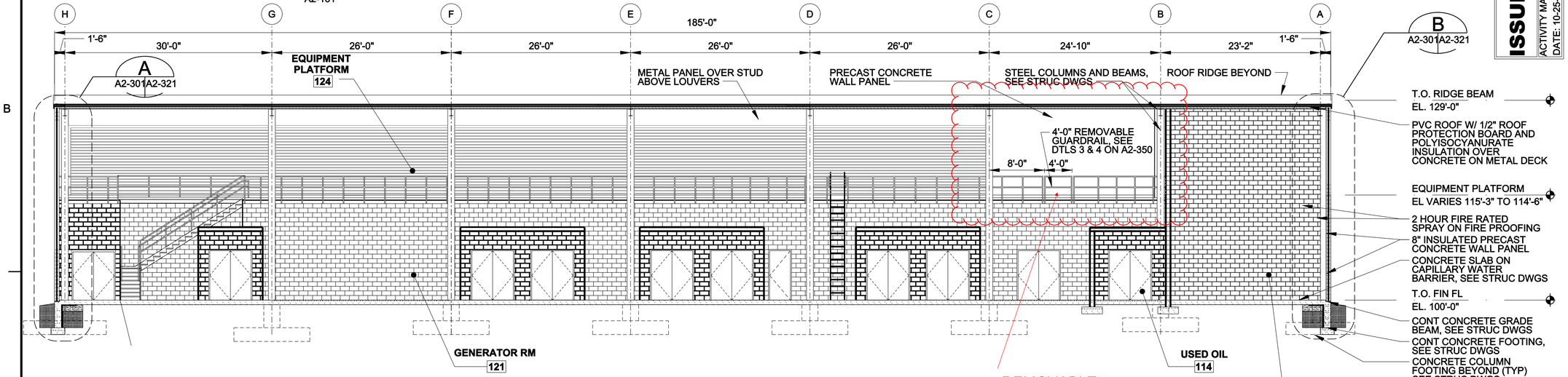

B BUILDING SECTION

A2-101A2-301
A2-102
A2-111
A2-112
A2-121
A2-122
A2-151
A2-152
A2-161
A2-162

SCALE: 1/8" = 1'-0"

1/8"=1'-0" 0 2' 4' 8' 16' 24'

US Army Corps of Engineers
Baltimore District

REAL ESTATE DIVISION,
REAL PROPERTY SERVICES
FIELD OFFICE
ANNAPOLIS JUNCTION, MARYLAND

BLACK & VEATCH
Building a world of difference.

THE INFORMATION PROVIDED HEREIN IS THE PROPERTY OF THE UNITED STATES GOVERNMENT, IT IS PROVIDED ONLY FOR THE PURPOSE STATED IN THE ACCOMPANYING DOCUMENT; DISTRIBUTION OF THIS DOCUMENT MAY ONLY BE MADE AS CONTAINED HEREIN IS LIMITED TO THE RECIPIENT SPECIFIED IN THE ACCOMPANYING DOCUMENT. REPRODUCTION OR DISTRIBUTION OF THIS DOCUMENT OR OF THE INFORMATION CONTAINED HEREIN IN WHOLE OR IN PART IN ANY MEDIUM WITHOUT THE APPROVAL OF THE UNITED STATES GOVERNMENT IS STRICTLY PROHIBITED. VIOLATORS OF THIS REQUIREMENT WILL BE PROSECUTED TO THE FULLEST EXTENT OF THE LAW.

ISSUED FOR CONSTRUCTION

ACTIVITY MANAGER:
DATE: 10-25-2011

Mark	Description	Date	Appr.

Designed by: TDH	Date: OCT 25, 2011
Dwn by: MEH	Ckd by: DJT
Project No. 23051	Rev. 0
Drawing Number: F-141-82-100	
RSFO Project Manager Andrea de la Peña	
Submitted by: John R. Hassed Project Manager	
File name: 1023051-A2-301.dgn	
Plot date: 3/28/2012	
Plot scale: 8	

MOUNTAINVIEW
Buckley AFB, Denver, CO

POWER PLANT
BUILDING SECTIONS

Drawing No.
59876

Sheet Reference No.
A2-301
Sheet 75 of 329

UNCLASSIFIED//FOR OFFICIAL USE ONLY

ke:35561 3/28/2012 3:25:41 PM ...\XM\V8XM-PDF-Full.pltcfg
Z:\Projects\RSFO IDIQ\Mountainview\50.0 - Detailed Design\50.2 Graphics\DGN\1023051-A2-301.dgn

...\DGN\1023051-A2-301.dgn

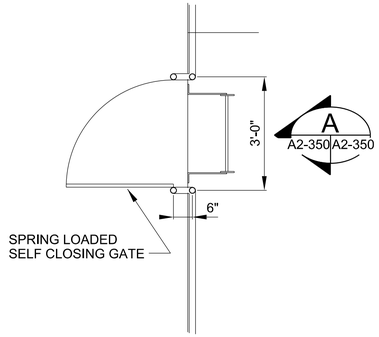

1 LADDER PLAN
A2-350 A2-101 A2-111 SCALE: 1/2" = 1'-0"

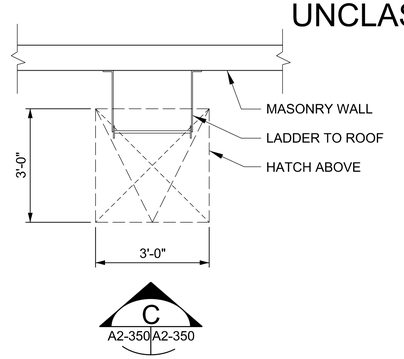

2 LADDER AND HATCH PLAN
A2-111 A2-350 SCALE: 1/2" = 1'-0"

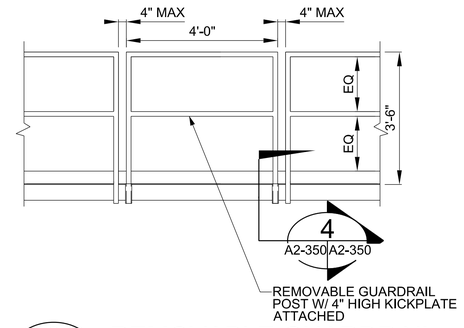

3 REMOVABLE GUARDRAIL
A2-111 A2-350 SCALE: 1/2" = 1'-0"

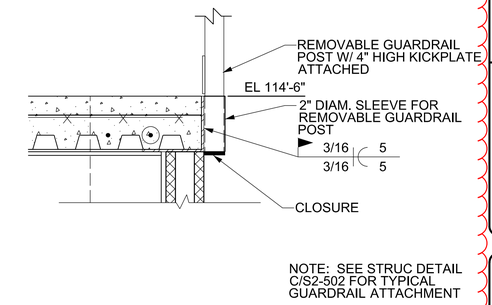

NOTE: SEE STRUC DETAIL C/S2-502 FOR TYPICAL GUARDRAIL ATTACHMENT

4 REMOVABLE GUARDRAIL
A2-350 A2-350 SCALE: 3" = 1'-0"

REMOVABLE GUARDRAIL DETAILS

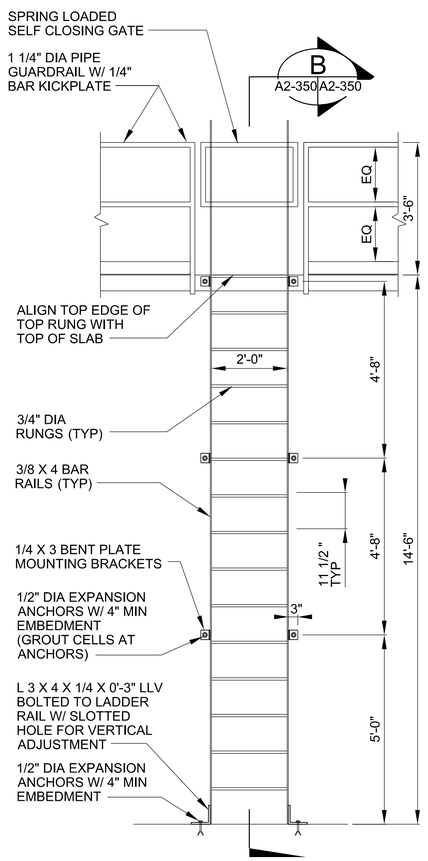

A LADDER ELEVATION
A2-350 A2-350 SCALE: 1/2" = 1'-0"

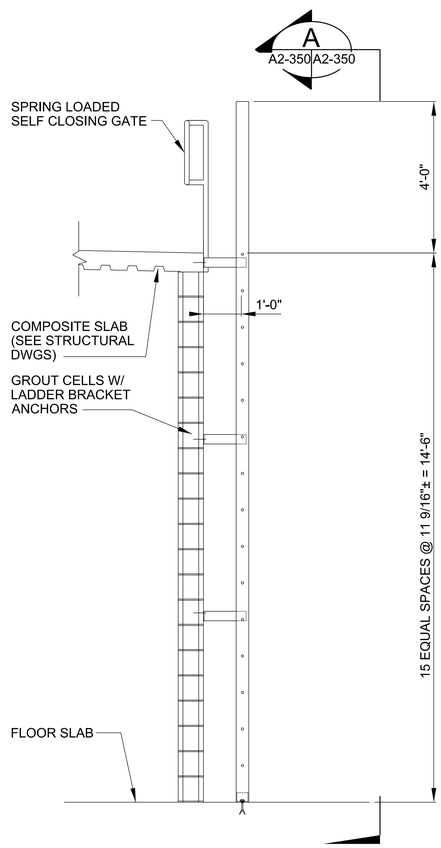

B LADDER AND RAILING SECTION
A2-350 A2-350 SCALE: 1/2" = 1'-0"

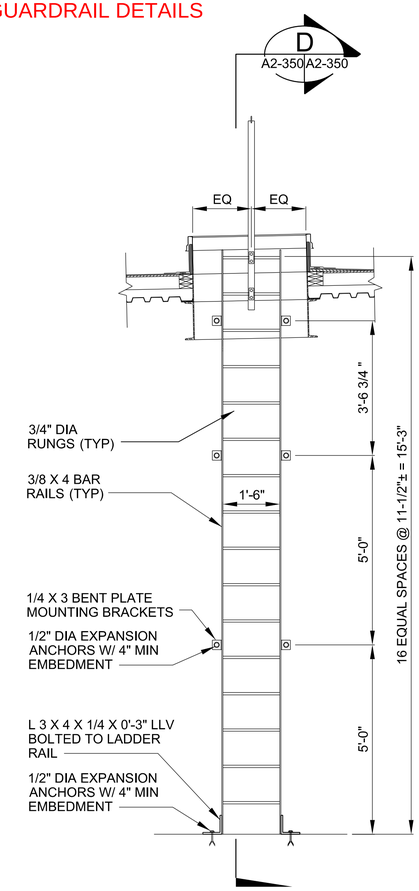

C LADDER ELEVATION
A2-350 A2-350 SCALE: 1/2" = 1'-0"

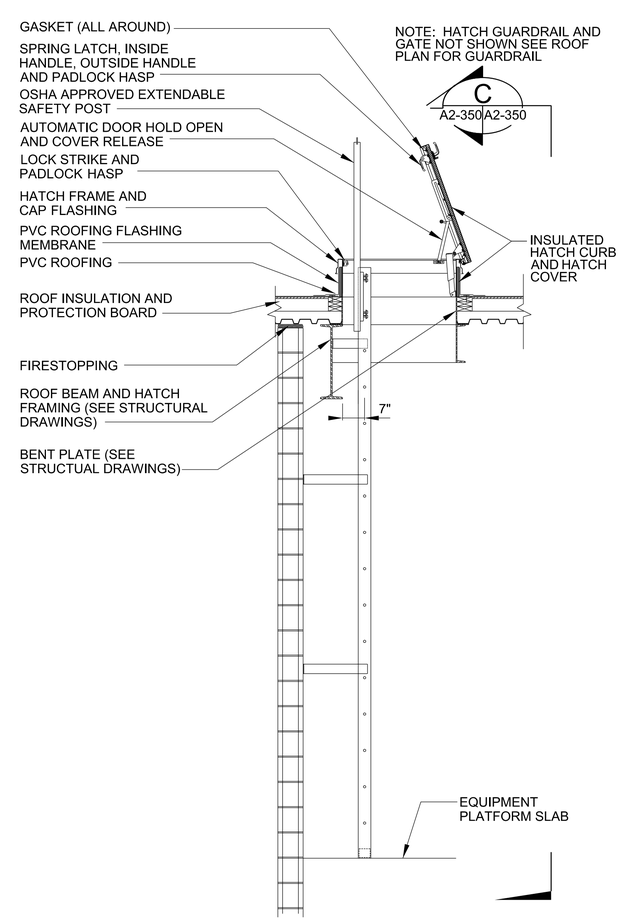

D LADDER AND HATCH SECTION
A2-350 A2-350 SCALE: 1/2" = 1'-0"

1/2"=1'-0" 0 6" 1' 2' 4' 6'

US Army Corps of Engineers
Baltimore District

REAL ESTATE DIVISION,
REAL PROPERTY SERVICES
FIELD OFFICE
ANNAPOLIS JUNCTION, MARYLAND

BLACK & VEATCH
Building a world of difference.

THE INFORMATION PROVIDED HEREIN IS THE PROPERTY OF THE UNITED STATES GOVERNMENT. IT IS PROVIDED ONLY FOR THE PURPOSE STATED IN THE ACCOMPANYING DOCUMENT. DISTRIBUTION OF THIS DOCUMENT TO ANY PERSON NOT CONTAINED HEREIN IS LIMITED TO THE RECIPIENT SPECIFIED IN THE ACCOMPANYING DOCUMENT. REPRODUCTION OR DISTRIBUTION OF THIS DOCUMENT TO ANY PERSON NOT CONTAINED HEREIN IN WHOLE OR IN PART IN ANY MEDIUM WITHOUT THE APPROVAL OF THE UNITED STATES GOVERNMENT IS PROHIBITED. VIOLATORS OF THIS DOCUMENT WILL BE PROSECUTED TO THE FULLEST EXTENT OF THE LAW.

Mark	Description	Date	App

ISSUED FOR CONSTRUCTION
ACTIVITY MANAGER:
DATE: 10-25-2011

Designed by: TDH	Date: OCT 25, 2011	Rev. 0
Dwn by: MEH	Ckd by: DJT	Project No. 23051
RSFO Project Manager Andrea de la Peña		Drawing Number: F-141-62-100
Submitted by: John R. Hassed Project Manager		File name: 102351-A2-350.dgn Plot date: 3/29/2012 Plot scale: 2

MOUNTAINVIEW
Buckley AFB, Denver, CO

POWER PLANT
ENLARGED LADDER PLANS
AND SECTIONS

Drawing No.
59879

Sheet Reference No.
A2-350
Sheet 78 of 329

UNCLASSIFIED//FOR OFFICIAL USE ONLY

ket35561 3/29/2012 8:40:56 AM ...\XM\V8XM-PDF-Full.pltcfg
Z:\Projects\RSFO IDIQ\Mountainview\50.0 - Detailed Design\50.2 Graphics\DGN\102351-A2-350.dgn