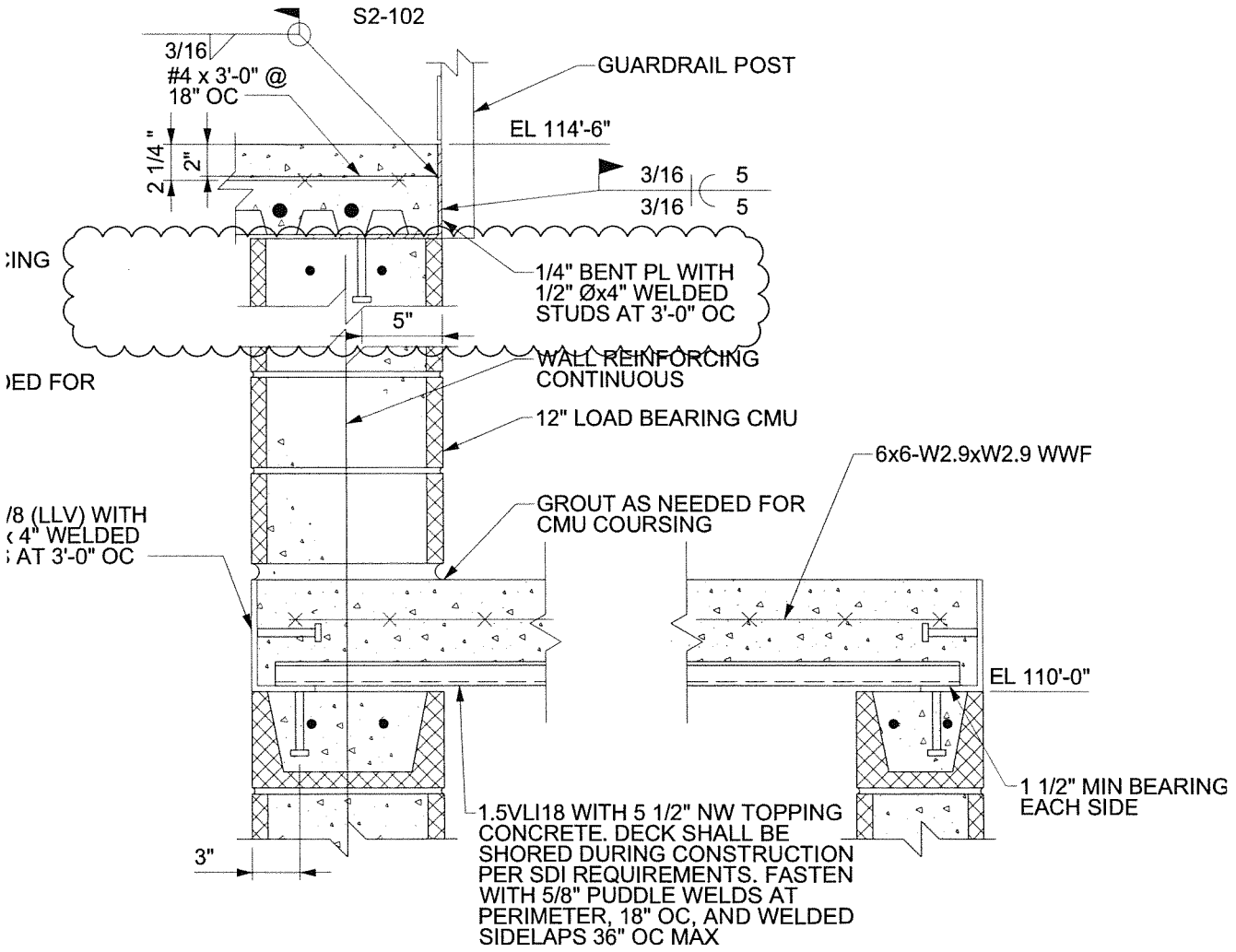

E SECTION

S2-111 S2-502 SCALE: 1 1/2" = 1' 0"

S2-112

S2-502