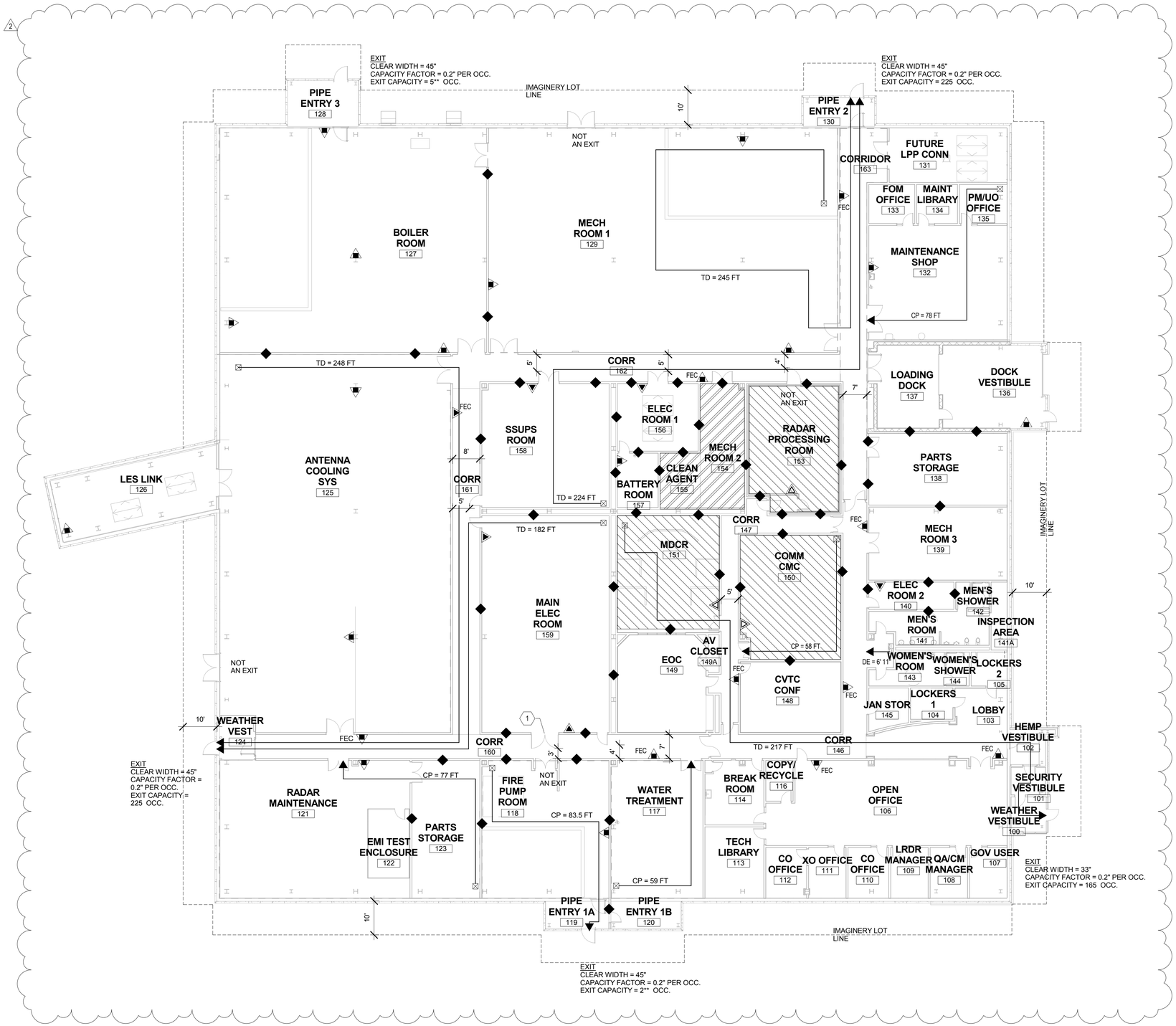

1 A-900003B CODE COMPLIANCE PLAN

1/16" = 1'-0"

PLAN NORTH

0' 8' 16' 32'

GENERAL NOTES:

A. FOR CODE SUMMARY, SEE SHEET A-900002B.

B. FOR GENERAL FIRE PROTECTION LEGEND AND SYMBOLS, SEE SHEET F-900001B.

C. ALL FIRE RATED WALLS SHALL BE LABELED IN ACCORDANCE WITH SPECIFICATION 09 90 00.01.

KEYNOTES:

1 DOOR HARDWARE SHALL PERMIT THE DOOR TO OPEN GREATER THAN 90 DEGREES.

LIFE SAFETY LEGEND

- MULTIPURPOSE DRY CHEMICAL FIRE EXTINGUISHER LOCATION (MIN. 4-A:60-B:C RATING)
- CLEAN AGENT FIRE EXTINGUISHER LOCATION (MIN. 2-A:10-B:C RATING)
- CARBON DIOXIDE FIRE EXTINGUISHER LOCATION (MIN. 10-B:C RATING)
- FEC — DENOTES FIRE EXTINGUISHER CABINET LOCATION
- CP = XX FT — COMMON PATH OF TRAVEL
- TD = XX FT — EGRESS TRAVEL DISTANCE
- DE = XX FT — DEAD END
- 1-HOUR FIRE RESISTANCE RATED PARTITION
- 2-HOUR FIRE RESISTANCE RATED PATITION
- NFPA 75 INFORMATION TECHNOLOGY EQUIPMENT ROOM
- NFPA 75 INFORMATION TECHNOLOGY EQUIPMENT AREA
- IMAGINERY LOT LINE LOCATION
- ** DENOTES EXIT CAPACITY IS LIMITED TO 50% OF THE OCCUPANTS WITHIN THAT SPACE

NOTE: FIRE EXTINGUISHERS ARE GFGI.

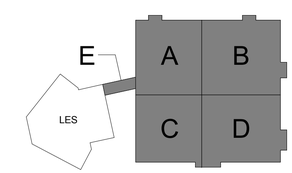

COMMONWEALTH OF MASSACHUSETTS
ROBERT D. HALL
FIRE PROTECTION
No. 50237
REGISTERED PROFESSIONAL ENGINEER
11/18/16

RTA

US Army Corps of Engineers ®
Alaska District

CONTRACT NO. ____ CONTRACTOR ____ CITY ____ STATE ____
Recommended: ____ Approved: ____ Date: ____
PRIME CONTRACTOR — RESIDENT ENGINEER

Symbol	Description	Date	Approved
AM07	AMENDMENT SEVEN	2017.01.12	BTN
Ac	READY TO ADVERTISE SUBMITTAL	2016.11.18	BTN

Date: 2016.11.18
Dwg Scale: AS NOTED
Plot Scale: 1:1
File Name: CLR_LRDR_MCF_FP_2015
Drawing #: AF-141-391-02

CLR039a

Designed: RDV
Drawn: RDV
Reviewed: RJE
Submitted: BTN

U.S. ARMY ENGINEER DISTRICT
CORPS OF ENGINEERS
ANCHORAGE, ALASKA

AECOM • TETRA TECH JV

W911KB-17-R-0010
MDA657

NOT FOR CONSTRUCTION

CLEAR AFS, ALASKA
LONG RANGE DISCRIMINATION RADAR
CONSTRUCTION PACKAGE 1 - VOLUME 2
CODE COMPLIANCE PLAN

Reference number:
A-900003B

PLOTTED ON 1/11/2017 2:54:28 PM

C:\Users\SEAN.KEATING\Documents\CLR_LRDR_MCF_FP_2015_sean.keating@tetratech.com.rvt

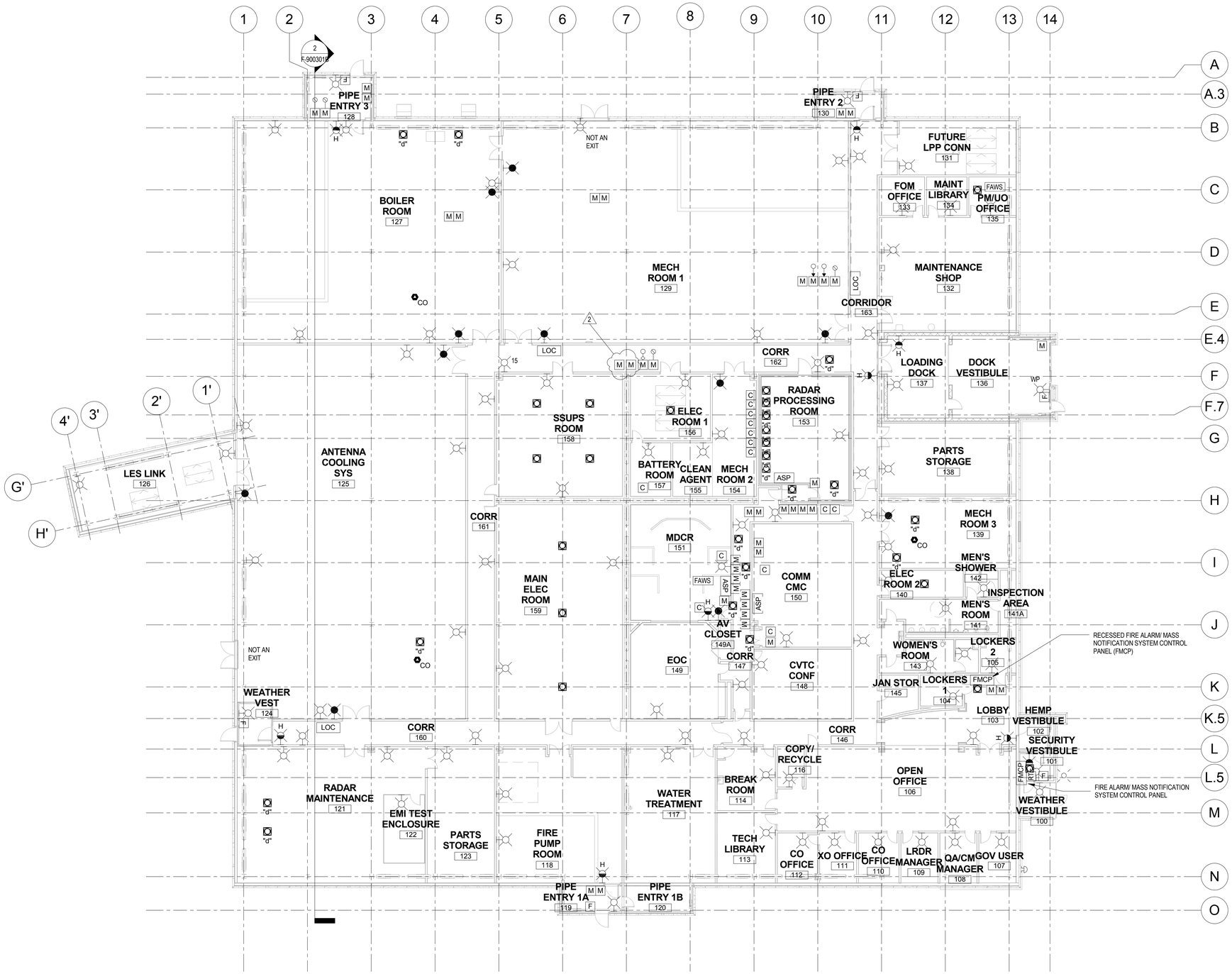

1
F-900106B

FIRE ALARM / MASS NOTIFICATION SYSTEM COMPOSITE PLAN

1/16" = 1'-0"

GENERAL NOTES:

A. FOR GENERAL FIRE PROTECTION LEGEND AND SYMBOLS, SEE SHEET F-900001B.

B. FOR STROBE CANDELA RATINGS, SEE SHEETS F-900107B, F-900108B, F-900109B, AND F-900110B.

C. SPEAKER LAYOUT SHALL BE DETERMINED BY THE FIRE ALARM CONTRACTOR BASED ON INTELLIGIBILITY CALCULATIONS.

D. PROVIDE SIGNAGE IN RADAR PROCESSING RM., COMM CMC & MDCR TO IDENTIFY AND DIFFERENTIATE BUILDING FIRE ALARM SYSTEM NOTIFICATION APPLIANCES FROM I.T. ROOM FIRE ALARM SIGNALS.

E. ALL FIRE ALARM / MNS DEVICES LOCATED OUTSIDE OF THE HEMP SHIELD SHALL BE CONNECTED TO THE FMCP LOCATED IN SECURITY VESTIBULE 101. FIRE ALARM CIRCUITS LOCATED OUTSIDE OF THE HEMP SHIELD SHALL BE RUN INSIDE THE ATTIC.

F. FOR CLARITY, TAMPER SWITCHES, FLOW SWITCHES AND MODULES LOCATED IN THE FIRE PUMP ROOM ARE NOT SHOWN ON THIS PLAN. REFER TO PARTIAL FIRE ALARM PLANS.

G. FOR CLARITY, REMOTE TESTING STATIONS ASSOCIATED WITH DUCT SMOKE DETECTORS ARE NOT SHOWN ON THIS PLAN. REFER TO PARTIAL FIRE ALARM PLANS.

H. PROVIDE A WEATHER PROOF WALL SPEAKER ON THE EXTERIOR WALL OF THE BUILDING ADJACENT TO ALL DOORS.

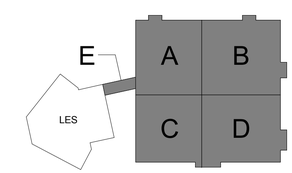

US Army Corps of Engineers ®
Alaska District

CONTRACT NO. ____ CONTRACTOR ____ CITY ____ STATE ____
Recommended: ____ Approved: ____ Date: ____
PRIME CONTRACTOR ____ RESIDENT ENGINEER ____

No.	Description	Date	By
AM07	AMENDMENT SEVEN	2017.01.12	
AM03	READY TO ADVERTISE SUBMITTAL	2016.12.13	
		2016.11.18	BTN

Date: 20/16.11.18
Dwg Scale: AS NOTED
Plot Scale: 1:1
File Name: CLR_LRDR_MCF_FP_2015
Drawing #: AF-141-391-02

CLR039a

Designed: RDV
Drawn: RDV
Reviewed: RJE
Submitted: BTN

U.S. ARMY ENGINEER DISTRICT
CORPS OF ENGINEERS
ANCHORAGE, ALASKA

AECOM + TETRA TECH JV

W911KB-17-R-0010
MDA657

NOT FOR CONSTRUCTION

ROBERT D. HALL
FIRE PROTECTION
No. 50237
COMMONWEALTH OF MASSACHUSETTS
REGISTERED PROFESSIONAL ENGINEER
11/18/16

RTA

CLEAR AFS, ALASKA
LONG RANGE DISCRIMINATION RADAR
CONSTRUCTION PACKAGE 1 - VOLUME 2
FIRE ALARM COMPOSITE PLAN

Reference number:
F-900106B

PLOTTED ON 1/11/2017 2:54:42 PM

C:\Users\SEAN.KEATING\Documents\CLR_LRDR_MCF_FP_2015_sean.keating@tetratech.com.rvt

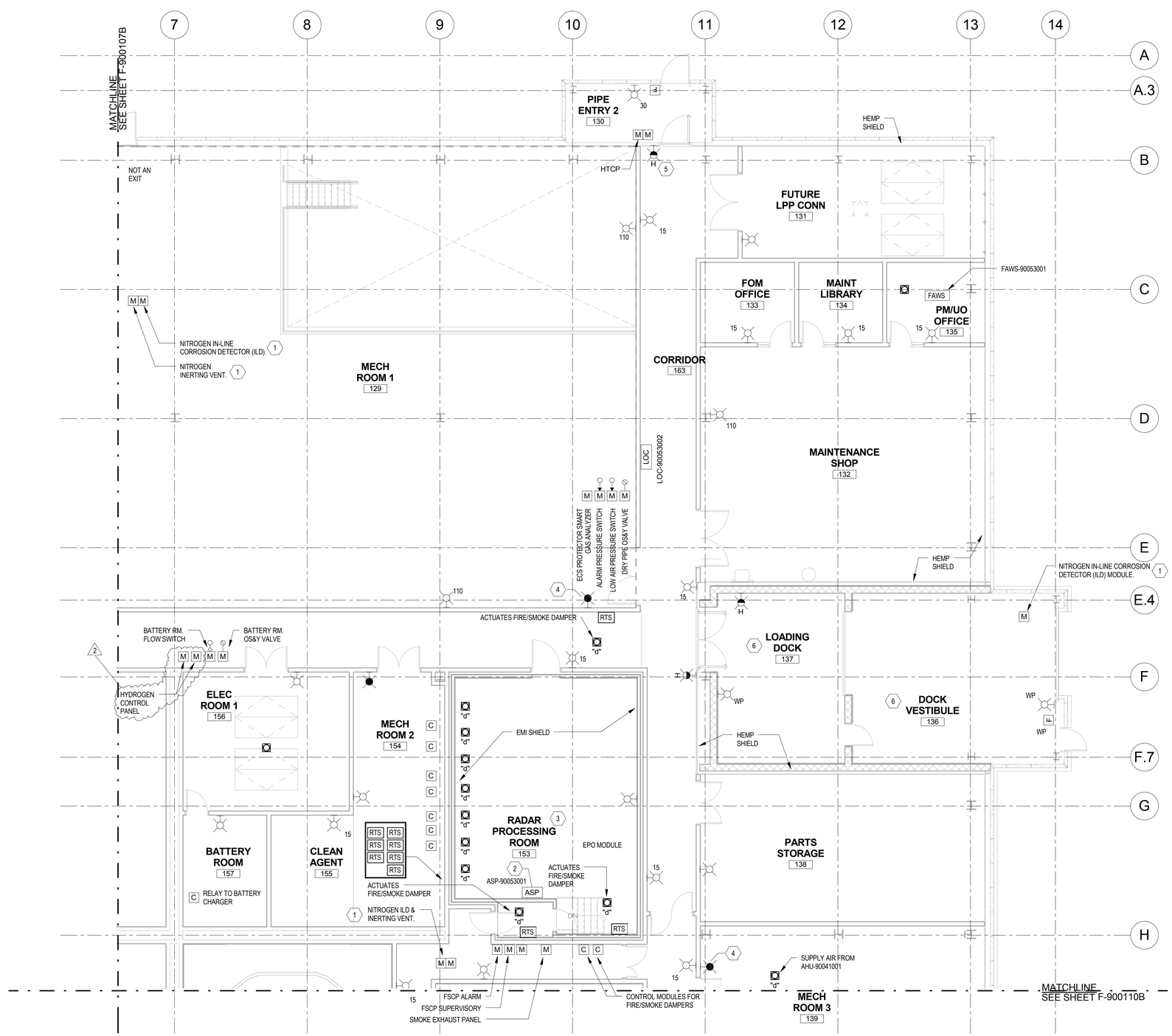

FIRE ALARM / MASS NOTIFICATION SYSTEM PLAN B

B / F-900108B

1/8" = 1'-0"

PLAN NORTH

0' 4' 8' 16'

GENERAL NOTES:

A. FOR GENERAL FIRE PROTECTION LEGEND AND SYMBOLS, SEE SHEET F-900001B.

B. ALL STROBES SHALL BE 75 CANDELA UNLESS OTHERWISE NOTED.

C. PROVIDE SIGNAGE IN THE RADAR PROCESSING ROOM, COMM CMC & MDCR TO IDENTIFY AND DIFFERENTIATE THE BUILDING FIRE ALARM/ MNS NOTIFICATION APPLIANCES FROM THE I.T. ROOM FIRE ALARM SIGNALS.

D. ALL FIRE ALARM/MNS DEVICES LOCATED OUTSIDE OF THE HEMP SHIELD SHALL BE CONNECTED TO THE FMCP LOCATED OUTSIDE OF THE HEMP SHEILD (SECURITY VEST. 101). FIRE ALARM CIRCUITS LOCATED OUTSIDE OF THE HELP SHIELD SHALL BE RUN INSIDE THE ATTTIC.

E. WHEN LOCATED IN THE SAME VICINITY, FIRE ALARM & MNS STROBES SHALL BE GROUPED TOGETHER AND SEPARATED FROM OTHER VISUAL INDICATORS.

F. FIBER OPTIC CABLING AND ASSOCIATED CONDUIT SHALL BE INSTALLED I.A.W. NFPA 70 ARTICLES 760 & 770 AND TIA/EIA-568.

KEYNOTES:

1. ACTUAL LOCATION TO BE COORDINATED WITH THE SPRINKLER CONTRACTOR.
2. PROVIDE AIR-ASPIRATING SMOKE DETECTION SYSTEM AT THE CEILING LEVEL & BELOW THE RAISED FLOOR IN RADAR PROCESSING ROOM 153.
3. ALL PENETRATIONS THROUGH EMI SHIELD SHALL BE PROTECTED IN ACCORDANCE WITH MIL-HDBK-1195.
4. BATTLESHORT MODE INDICATOR LIGHT (TYP.). PROVIDE SIGNAGE AT EACH LIGHT TO IDENTIFY IT AS A BATTLESHORT MODE INDICATOR LIGHT. COORDINATE EXACT WORDING WITH THE CONTRACTING OFFICER.
5. HEMP MODE BEACON (TYP.). PROVIDE SIGNAGE AT EACH BEACON TO IDENTIFY IT AS A HEMP MODE BEACON. COORDINATE EXACT WORDING WITH THE CONTRACTING OFFICER.
6. ALL FA/MNS DEVICES LOCATED WITHIN DOCK VERTIBULE 136 & LOADING DOCK 137 SHALL BE WEATHERPROOF.

US Army Corps of Engineers ®
Alaska District

CONTRACT NO. ____ CONTRACTOR ____ CITY ____ STATE ____
Recommended: ____ Approved: ____ Date: ____
PRIME CONTRACTOR ____ RESIDENT ENGINEER ____

No.	Action	Description	Date	By
A1	AM007	AMENDMENT SEVEN	2017.01.12	
	AM003	ATTIC BEACONS	2016.12.13	
		READY TO ADVERTISE SUBMITTAL	2016.11.18	BTN

Designed: RDV
Drawn: RDV
Reviewed: RJE
Submitted: BTN
Date: 20/16.11.18
Dwg Scale: AS NOTED
Plot Scale: 1:1
File Name: CLR_LRDR_MCF_FP_2015
Drawing #: AF-141-391-02
CLR039a

U.S. ARMY ENGINEER DISTRICT
CORPS OF ENGINEERS
ANCHORAGE, ALASKA

AECOM + TETRA TECH JV

W9111KB-17-R-0010
MDA657

NOT FOR CONSTRUCTION

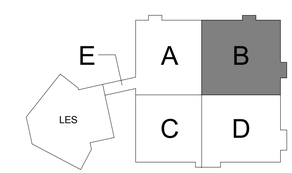

CLEAR AFS, ALASKA
LONG RANGE DISCRIMINATION RADAR
CONSTRUCTION PACKAGE 1 - VOLUME 2
PARTIAL FIRE ALARM PLAN B

COMMONWEALTH OF MASSACHUSETTS
ROBERT D. HALL
FIRE PROTECTION
No. 50237
REGISTERED PROFESSIONAL ENGINEER
11/18/16

RTA

Reference number:
F-900108B

PLOTTED ON 1/11/2017 2:54:45 PM

C:\Users\SEAN.KEATING\Documents\CLR_LRDR_MCF_FP_2015_sean.keating@tetratech.com.rvt

		ANNUNCIATION AT FMCP					TRANSMIT SIGNALS TO FIRE ALARM WORK STATIONS						AUXILIARY FUNCTIONS						NOTIFICATION SIGNALS										
		AUDIO-VISUAL FIRE ALARM INDICATION BY DEVICE	AUDIO-VISUAL FIRE ALARM COMMON SUPERVISORY INDICATION	AUDIO-VISUAL COMMON TROUBLE INDICATION	SUPERVISORY INDICATION FOR FA OVERRIDE BY MNS	CARBON MONOXIDE DETECTOR ACTIVATION	FIRE ALARM SIGNAL BY DEVICE	CARBON MONOXIDE ALARM SIGNAL	SUPERVISORY SIGNAL BY DEVICE TYPE	TROUBLE SIGNAL BY DEVICE TYPE	SUPERVISORY INDICATION FOR FA OVERRIDE BY MNS	TRANSMIT SIGNAL BY DEVICE TO FIRE STATION (1)	SHUT DOWN ASSOCIATED HVAC UNIT AND/OR FIRE SMOKE DAMPERS	CLOSE FIRE/ SMOKE DAMPERS SERVING I.T. EQUIPMENT RMS	OPEN FIRE/ SMOKE DAMPERS ASSOCIATED WITH EXHAUST SYS.	TEMPORARLY OVERRIDE FIRE ALARM AUDIBLE MESSAGE	DISABLE MICROPHONES INTENDED SOLEY FOR GENERAL PAGING	REMOVE POWER TO BATTERY CHARGER IN BATTERY RM.	LOCAL ALARM SIGNAL	INITIATE FIRE ALARM AUDIO-VISUAL (SPEAKERS & CLEAR STROBES) NOTIFICATION APPLIANCES	INITIATE CARBON MONOXIDE PRE-RECORDED MESSAGE AND STROBES	INITIATE MNS AUDIO-VISUAL (SPEAKERS & AMBER STROBES) NOTIFICATION APPLIANCES	INITIATE BATTLESHORT MODE VOICE MESSAGE & RED INDICATOR LIGHT	INITIATE HEMP MODE VOICE MESSAGE & YELLOW INDICATOR LIGHT	OVERRIDE PA SYSTEM MESSAGE (IF ACTIVE)	EXTERIOR FIRE ALARM BEACON ACTIVATION	EXTERIOR WATERFLOW ALARM BELL ACTIVATION	INITIATE FIRE ALARM/ MNS AUDIO APPLIANCES ONLY	
FIRE ALARMS		A	B	C	D	E	F	G	H	I	J	K	L	M	N	O	P	Q	R	S	T	U	V	W	X	Y	Z	AA	
1	MANUAL FIRE ALARM STATION	X					X					X		X						X					X	X			1
2	SPRINKLER WATERFLOW SWITCH - MCF ZONES	X					X					X		X						X					X	X	X		2
3	SPRINKLER WATERFLOW SWITCH - BATTERY RM. 157	X					X					X		X				X		X					X	X	X		3
4	DRY PIPE SPRINKLER - ALARM PRESSURE SWITCH	X					X					X		X						X					X	X	X		4
5	SPOT SMOKE DETECTOR	X					X					X		X						X					X	X			5
6	AIR SAMPLING DETECTOR - 1ST ALARM LEVEL		X						X										X										6
7	AIR SAMPLING DETECTOR - 2ND ALARM LEVEL	X					X					X		X					X	X					X	X			7
8	AIR SAMPLING DETECTOR - 3RD ALARM LEVEL	X					X					X		X					X	X					X	X			8
9	ALARM SIGNAL - CLEAN AGENT SYSTEM CONTROL PANEL	X					X					X		X						X					X	X			9
10	CARBON MONOXIDE DETECTOR					X		X				X									X				X	X			10
11	HYDROGEN CONTROL PANEL - SECOND STAGE SIGNAL	X					X					X																	11
MASS NOTIFICATION SYSTEM SIGNALS																													
12	MNS MESSAGE FROM FMCP OR LOC																					X			X				12
13	MNS MESSAGE VIA TELEPHONE																					X			X				13
14	MNS PRE-RECORDED MESSAGE																					X			X				14
15	WIDE AREA MNS EXTERNAL MESSAGE INPUT																					X			X				15
16	GENERAL PAGING																											X	16
SUPERVISORY SIGNALS																													
17	SPRINKLER WATERFLOW SWITCH - LES & LPP FEED MAINS		X						X			X																	17
18	VALVE SUPERVISORY SWITCH		X						X			X																	18
19	CONCURRENT FA AND MNS ALARM				X						X	X				X						X							19
20	SUPERVISORY SIGNAL BY DEVICE		X						X			X																	20
21	FIRE PUMP 1 RUNNING		X						X			X																	21
22	FIRE PUMP 2 RUNNING		X						X			X																	22
23	JOCKEY PUMP RUNNING		X						X			X																	23
24	FIRE PUMP CONTROLLER - LOW PUMP ROOM TEMPERATURE		X						X			X																	24
25	DUCT SMOKE DETECTOR		X						X			X	X																25
26	AIR SAMPLING DETECTOR - SUPERVISORY SIGNAL		X						X			X																	26
27	CLEAN AGENT SYSTEM CONTROL PANEL - SUPERVISORY SIGNAL		X						X			X																	27
28	PRESSURE SWITCH - ECS IN-LINE CORROSION DETECTOR		X						X			X																	28
29	SUPERVISORY SIGNAL FROM ECS PROTECTOR SMART GAS ANALYZER		X						X			X																	29
30	ACTIVATION OF THE MANUAL SMOKE/CLEAN AGENT EXHAUST SYS.		X						X			X			X														30
31	DRY PIPE SPRINKLER - LOW AIR PRESSURE		X						X			X																	31
32	HEAT TRACE SYS. ACTIVATION MONITORING PIPE TEMPERATURE SENSING		X						X			X																	32
33	ACTIVATION OF BATTLESHORT MODE - INPUT FROM BMS		X						X			X											X						33
34	ACTIVATION OF HEMP MODE - INPUT FROM BMS		X						X			X												X					34
35	HYDROGEN CONTROL PANEL - FIRST STAGE SIGNAL		X						X			X																	35
		A	B	C	D	E	F	G	H	I	J	K	L	M	N	O	P	Q	R	S	T	U	V	W	X	Y	Z	AA	

SEE SHEET F-900602B FOR TROUBLE CONDITIONS

GENERAL NOTES:

A. FOR GENERAL FIRE PROTECTION LEGEND AND SYMBOLS, SEE SHEET F-900001B.

B. THE BATTLESHORT MODE VOICE MESSAGE SHALL BE INITIATED UPON ACTIVATION OF BATTLESHORT MODE BUT SHALL NOT REMAIN ACTIVE FOR THE ENTIRE DURATION OF BATTLESHORT MODE. BATTLESHORT MODE BEACONS SHALL REMAIN ACTIVE UNTIL BATTLESHORT MODE IS CANCELLED.

B. THE HEMP MODE VOICE MESSAGE SHALL BE INITIATED UPON ACTIVATION OF HEMP MODE BUT SHALL NOT REMAIN ACTIVE FOR THE ENTIRE DURATION OF HEMP MODE. HEMP MODE BEACONS SHALL REMAIN ACTIVE UNTIL HEMP MODE IS CANCELLED.

KEYNOTES:

(1) SEE SHEET F-900604B FOR MONACO RADIO TRANSMITTER ZONE SCHEDULE.

MNS SEQUENCE OF OPERATIONS

THE MASS NOTIFICATION SYSTEM SHALL TAKE PRIORITY AND OVERRIDE THE FIRE ALARM AND PUBLIC ADDRESS SYSTEM.

THE MAIN FIRE ALARM/ MASS NOTIFICATION SYSTEM CONTROL PANEL (FMCP) SHALL FUNCTION AS THE ACU. THE ACU SHALL TAKE PRECEDENCE OVER FIRE ALARM SIGNALS, WIDE AREA MNS, TELEPHONE MESSAGES AND OVER ANY LOC FUNCTION. THE LOC SHALL TAKE PRECEDENCE OVER ANY FIRE ALARM SIGNALS, WIDE AREA MNS OR TELEPHONE MESSAGES. ONCE THE ACU IS ACTIVATED, THE LOC SHALL NOT BE ABLE TO OVERRIDE THE ACU.

COMMONWEALTH OF MASSACHUSETTS
ROBERT D. HALL
FIRE PROTECTION
No. 50237
REGISTERED PROFESSIONAL ENGINEER
11/18/16

RTA

US Army Corps of Engineers ®
Alaska District

CONTRACT NO. ____ CONTRACTOR ____ CITY ____ STATE ____
Recommended: ____ Approved: ____ Date: ____
PRIME CONTRACTOR ____ RESIDENT ENGINEER ____

Rev.	Action	Description	Date	Appr.
AM07	AM07	AMENDMENT SEVEN	2017.01.12	
AM03	AM03	ATTN: BEACONS	2016.12.13	
		READY TO ADVERTISE SUBMITTAL	2016.11.18	BTN

Date: 2016.11.18
Dwg Scale: AS NOTED
Plot Scale: 1:1
File Name: CLR_LRDR_MCF_FP_2015
Drawing #: AF-141-391-02

CLR039a

NOT FOR CONSTRUCTION

Designed: RDV
Drawn: RDV
Reviewed: RJE
Submitted: BTN

U.S. ARMY ENGINEER DISTRICT
CORPS OF ENGINEERS
ANCHORAGE, ALASKA

AECOM + TETRA TECH JV

W911KB-17-R-0010
MDA657

CLEAR AFS, ALASKA
LONG RANGE DISCRIMINATION RADAR
CONSTRUCTION PACKAGE 1 - VOLUME 2
FIRE ALARM / MASS NOTIFICATION SYSTEM MATRIX - SHEET 1 OF 2

Reference number:
F-900601B

PLOTTED ON 1/11/2017 2:54:59 PM

C:\Users\SEAN.KEATING\Documents\CLR_LRDR_MCF_FP_2015_sean.keating@tetratech.com.rvt

GENERAL NOTES:

A. FOR GENERAL FIRE PROTECTION LEGEND AND SYMBOLS, SEE SHEET F-900001B.

KEYNOTES:

(1) SEE SHEET F-900604B FOR MONACO RADIO TRANSMITTER ZONE SCHEDULE.

		ANNUNCIATION AT FMCP					TRANSMIT SIGNALS TO FIRE ALARM WORK STATIONS						AUXILIARY FUNCTIONS						NOTIFICATION SIGNALS										
		AUDIO-VISUAL FIRE ALARM INDICATION BY DEVICE	AUDIO-VISUAL FIRE ALARM COMMON SUPERVISORY INDICATION	AUDIO-VISUAL COMMON TROUBLE INDICATION	SUPERVISORY INDICATION FOR FA OVERRIDE BY MNS	CARBON MONOXIDE DETECTOR ACTIVATION	FIRE ALARM SIGNAL BY DEVICE	CARBON MONOXIDE ALARM SIGNAL	SUPERVISORY SIGNAL BY DEVICE TYPE	TROUBLE SIGNAL BY DEVICE TYPE	SUPERVISORY INDICATION FOR FA OVERRIDE BY MNS	TRANSMIT SIGNAL BY DEVICE TO FIRE STATION (1)	SHUT DOWN ASSOCIATED HVAC UNIT AND/OR FIRE SMOKE DAMPERS	CLOSE FIRE/ SMOKE DAMPERS SERVING I.T. EQUIPMENT RMS	OPEN FIRE/ SMOKE DAMPERS ASSOCIATED WITH EXHAUST SYS.	TEMPORARLY OVERRIDE FIRE ALARM AUDIBLE MESSAGE	DISABLE MICROPHONES INTENDED SOLEY FOR GENERAL PAGING	REMOVE POWER TO BATTERY CHARGER IN BATTERY RM.	LOCAL ALARM SIGNAL	INITIATE FIRE ALARM AUDIO-VISUAL (SPEAKERS & CLEAR STROBES) NOTIFICATION APPLIANCES	INITIATE CARBON MONOXIDE PRE-RECORDED MESSAGE AND STROBES	INITIATE MNS AUDIO-VISUAL (SPEAKERS & AMBER STROBES) NOTIFICATION APPLIANCES	INITIATE BATTLESHORT MODE VOICE MESSAGE & RED INDICATOR LIGHT	INITIATE HEMP MODE VOICE MESSAGE & YELLOW INDICATOR LIGHT	OVERRIDE PA SYSTEM MESSAGE (IF ACTIVE)	EXTERIOR FIRE ALARM BEACON ACTIVATION	EXTERIOR WATERFLOW ALARM BELL ACTIVATION	INITIATE FIRE ALARM/ MNS AUDIO APPLIANCES ONLY	
	TROUBLE CONDITIONS	A	B	C	D	E	F	G	H	I	J	K	L	M	N	O	P	Q	R	S	T	U	V	W	X	Y	Z	AA	
36	SLC OPEN			X						X		X																	36
37	SLC SHORT			X						X		X																	37
38	SLC GROUND			X						X		X																	38
39	FMCP LOW BATTERY VOLTAGE			X						X		X																	39
40	FMCP CIRCUIT FAULT			X						X		X																	40
41	FMCP SUPERVISED COMPONENT FAILURE			X						X		X																	41
42	FMCP AC POWER FAILURE			X						X		X					X												42
43	NOTIFICATION APPLIANCE CIRCUIT SHORT			X						X		X																	43
44	FIRE PUMP 1 CONTROLLER NOT IN AUTO			X						X		X																	44
45	FIRE PUMP 1 AC POWER FAILURE			X						X		X																	45
46	FIRE PUMP 1 PHASE REVERSAL			X						X		X																	46
47	FIRE PUMP 1 FAILURE TO START			X						X		X																	47
48	FIRE PUMP 2 CONTROLLER NOT IN AUTO			X						X		X																	48
49	FIRE PUMP 2 AC POWER FAILURE			X						X		X																	49
50	FIRE PUMP 2 PHASE REVERSAL			X						X		X																	50
51	FIRE PUMP 2 FAILURE TO START			X						X		X																	51
52	JOCKEY PUMP AC POWER FAILURE			X						X		X																	52
53	JOCKEY PUMP NOT IN AUTO			X						X		X																	53
54	AIR SAMPLING DETECTOR - TROUBLE SIGNAL			X						X		X																	54
55	CLEAN AGENT SYSTEM CONTROL PANEL - TROUBLE SIGNAL			X						X		X																	55
56	HEAT TRACE SYSTEM - TROUBLE SIGNAL			X						X		X																	56
	SEE SHEET F-900601B FOR ALARM, MNS, AND SUPERVISORY CONDITIONS	A	B	C	D	E	F	G	H	I	J	K	L	M	N	O	P	Q	R	S	T	U	V	W	X	Y	Z	AA	

US Army Corps of Engineers ®
Alaska District

CONTRACT NO. _____
CONTRACTOR _____
CITY _____ STATE _____
Recommended: _____ Approved: _____ Date: _____
PRIME CONTRACTOR — RESIDENT ENGINEER

Rev.	Action	Description	Date	Approved
A02	AM007	AMENDMENT SEVEN	2017.01.12	
A00	A003	ATTIC BEACONS	2016.12.13	
		READY TO ADVERTISE SUBMITTAL	2016.11.18	BTN

Date: 2016.11.18
Dwg Scale: AS NOTED
Plot Scale: 1:1
File Name: CLR_LRDR_MCF_FP_2015
Drawing #: AF-141-391-02

CLR039a

NOT FOR CONSTRUCTION

Designed: RDV
Drawn: RDV
Reviewed: RJE
Submitted: BTN

U.S. ARMY ENGINEER DISTRICT
CORPS OF ENGINEERS
ANCHORAGE, ALASKA

AECOM + TETRA TECH JV

W911KB-17-R-0010
MDA657

CLEAR AFS, ALASKA
LONG RANGE DISCRIMINATION RADAR
CONSTRUCTION PACKAGE 1 - VOLUME 2
FIRE ALARM / MASS NOTIFICATION SYSTEM MATRIX - SHEET 2 OF 2

COMMONWEALTH OF MASSACHUSETTS
ROBERT D. HALL
FIRE PROTECTION
No. 50237
REGISTERED PROFESSIONAL ENGINEER
11/18/16

RTA

Reference number:
F-900602B

PLOTTED ON 1/11/2017 2:55:00 PM
C:\Users\SEAN.KEATING\Documents\CLR_LRDR_MCF_FP_2015_sean.keating@tetratech.com.rvt

KEYNOTES:

1. PROVIDE TWO (2) 24V CLEAR FIRE ALARM BEACONS WITHIN THE ATTIC SPACE TO PROVIDE FIRE ALARM SYSTEM NOTIFICATION WITHIN THAT SPACE. LOCATE ONE BEACON AT EACH ACCESS POINT INTO THE ATTIC. BEACONS SHALL BE WALL MOUNTED BELOW THE BOTTOM OF THE ROOF STRUCTURAL BEAMS.

GENERAL NOTES:

A. FOR GENERAL FIRE PROTECTION LEGEND AND SYMBOLS, SEE SHEET F-900001B.

B. ACTUAL NUMBER OF DEVICES PER NOTIFICATION APPLIANCE CIRCUIT SHALL BE DETERMINED BY FIRE ALARM CONTRACTOR'S VOLTAGE DROP CALCULATIONS.

C. EACH NOTIFICATION APPLIANCE CIRCUIT SHALL HAVE AT LEAST 25% SPARE CAPACITY.

D. SPEAKER CIRCUITS SHALL BE DETERMINED BY THE FIRE ALARM CONTRACTOR AND ARE NOT SHOWN ON THE RISER DIAGRAM.

E. THE BMS WILL MONITOR POINTS FROM THE FA/MN SYSTEM BUT SHALL NOT HAVE ANY CONTROL FUNCTIONALITY OVER THE FMCP.

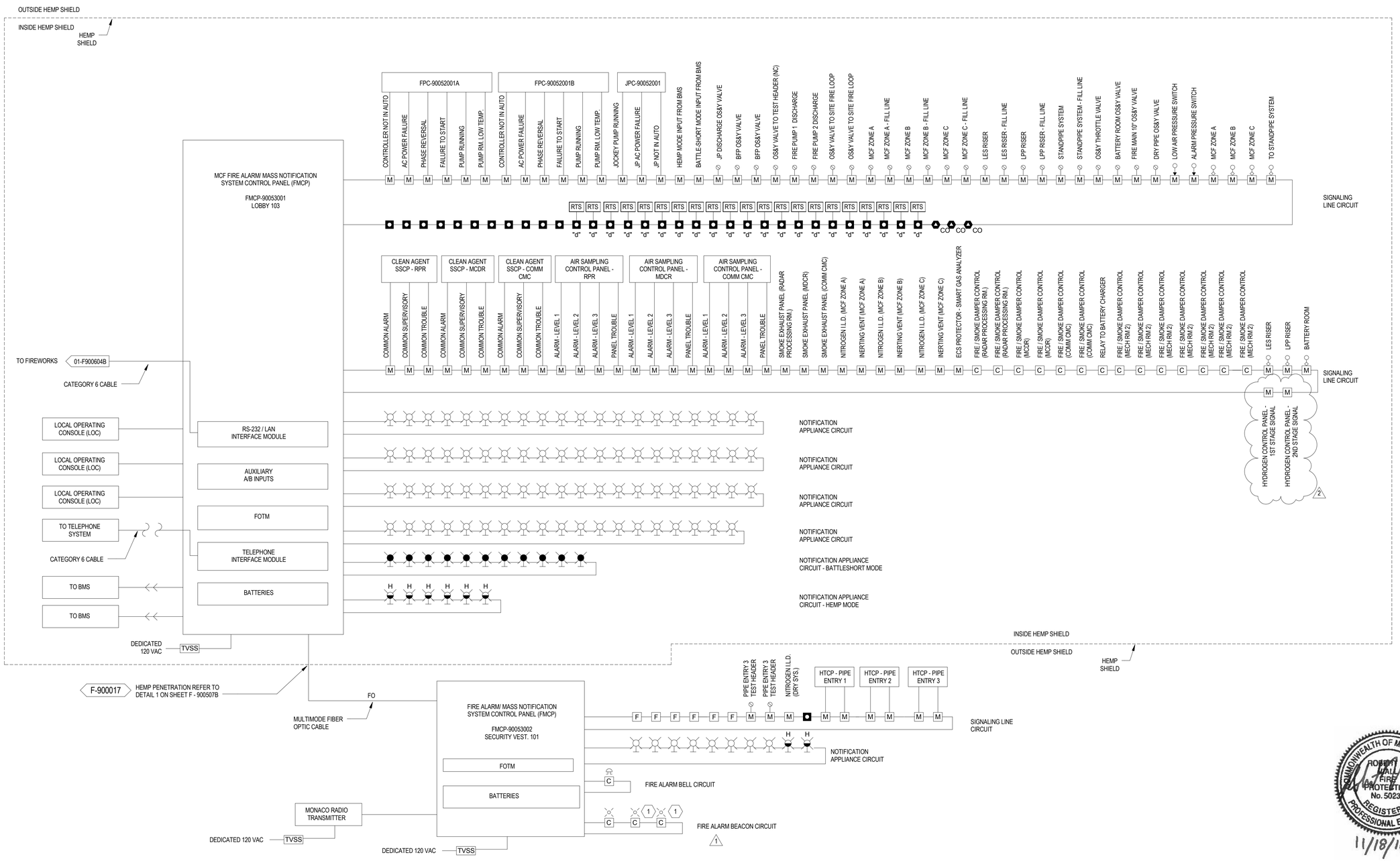

US Army Corps of Engineers ®
Alaska District

CONTRACT NO. ____ CONTRACTOR ____ CITY ____ STATE ____
Recommended: ____ PRIME CONTRACTOR
Approved: ____ RESIDENT ENGINEER
Date: ____

A1	1AM007	AMENDMENT SEVEN	2017.01.12
A2	AM003	ATTIC BEACONS	2016.12.13
A1		READY TO ADVERTISE SUBMITTAL	2016.11.18
No.	Author	Description	Date

Date: 2016.11.18
Dwg Scale: AS NOTED
Plot Scale: 1:1
File Name: CLR_LRDR_MCF_FP_2015
Drawing #: AF-141-391-02

NOT FOR CONSTRUCTION

Designed: RDV
Drawn: RDV
Reviewed: RJE
Submitted: BTN

U.S. ARMY ENGINEER DISTRICT
CORPS OF ENGINEERS
ANCHORAGE, ALASKA

AECOM • TETRA TECH JV

W911KB-17-R-0010
MDA657

CLR039a

CLEAR AFS, ALASKA
LONG RANGE DISCRIMINATION RADAR
FIRE ALARM / MASS NOTIFICATION SYSTEM RISER DIAGRAM

COMMONWEALTH OF MASSACHUSETTS
ROBERT D. HALL
FIRE PROTECTION
No. 50237
REGISTERED PROFESSIONAL ENGINEER
11/18/16

RTA

Reference number:
F-900603B

PLOTTED ON 1/11/2017 2:55:00 PM

C:\Users\SEAN.KEATING\Documents\CLR_LRDR_MCF_FP_2015_sean.keating@tetratech.com.rvt

MONACO RADIO TRANSMITTER ZONE SCHEDULE

1	BLDG. 900 - ALARM - MANUAL FIRE ALARM STATION
2	BLDG. 900 - ALARM - SPRINKLER WATERFLOW SWITCH - MCF ZONE A
3	BLDG. 900 - ALARM - SPRINKLER WATERFLOW SWITCH - MCF ZONE B
4	BLDG. 900 - ALARM - SPRINKLER WATERFLOW SWITCH - MCF ZONE C
5	BLDG. 900 - ALARM - SPRINKLER WATERFLOW SWITCH - MCF STANDPIPE RISER
6	BLDG. 900 - ALARM - SPRINKLER WATERFLOW SWITCH - BATTERY RM. 157
7	BLDG. 900 - ALARM - DRY PIPE SPRINKLER - ALARM PRESSURE SWITCH
8	BLDG. 900 - ALARM - SPOT SMOKE DETECTOR
9	BLDG. 900 - ALARM - AIR SAMPLING DETECTOR - MDCR 2ND ALARM LEVEL
10	BLDG. 900 - ALARM - AIR SAMPLING DETECTOR - MDCR 3RD ALARM LEVEL
11	BLDG. 900 - ALARM - AIR SAMPLING DETECTOR - RPR 2ND ALARM LEVEL
12	BLDG. 900 - ALARM - AIR SAMPLING DETECTOR - RPR 3RD ALARM LEVEL
13	BLDG. 900 - ALARM - AIR SAMPLING DETECTOR - COMM CMC 2ND ALARM LEVEL
14	BLDG. 900 - ALARM - AIR SAMPLING DETECTOR - COMM CMC 3RD ALARM LEVEL
15	BLDG. 900 - ALARM - MDCR CLEAN AGENT SYSTEM CONTROL PANEL
16	BLDG. 900 - ALARM - COMM CMC CLEAN AGENT SYSTEM CONTROL PANEL
17	BLDG. 900 - ALARM - RPR CLEAN AGENT SYSTEM CONTROL PANEL
18	BLDG. 900 - ALARM - CARBON MONOXIDE DETECTOR
19	BLDG. 900 - SUPERVISORY - SPRINKLER WATERFLOW SWITCH - LES
20	BLDG. 900 - SUPERVISORY - SPRINKLER WATERFLOW SWITCH - LPP
21	BLDG. 900 - SUPERVISORY - VALVE TAMPER SWITCH
22	BLDG. 900 - SUPERVISORY - FIRE PUMP RUNNING
23	BLDG. 900 - SUPERVISORY - JOCKEY PUMP RUNNING
24	BLDG. 900 - SUPERVISORY - DRY PIPE LOW AIR
25	BLDG. 900 - SUPERVISORY - AIR SAMPLING DETECTOR SUPERVISORY
26	BLDG. 900 - SUPERVISORY - CONCURRENT FA & MNS SIGNAL
27	BLDG. 900 - SUPERVISORY - DUCT SMOKE DETECTOR
28	BLDG. 900 - SUPERVISORY - HEAT TRACE CONTROL PANEL TEMPERATURE
29	BLDG. 900 - TROUBLE - FMCP
30	BLDG. 900 - TROUBLE - SLC
31	BLDG. 900 - TROUBLE - NAC
32	BLDG. 900 - TROUBLE - FIRE PUMP
33	BLDG. 900 - TROUBLE - JOCKEY PUMP
34	BLDG. 900 - TROUBLE - AIR SAMPLING DETECTOR
35	BLDG. 900 - TROUBLE - CLEAN AGENT PANEL
36	BLDG. 900 - TROUBLE - HEAT TRACE CONTROL PANEL
37	SPARE
38	SPARE
39	SPARE
40	SPARE

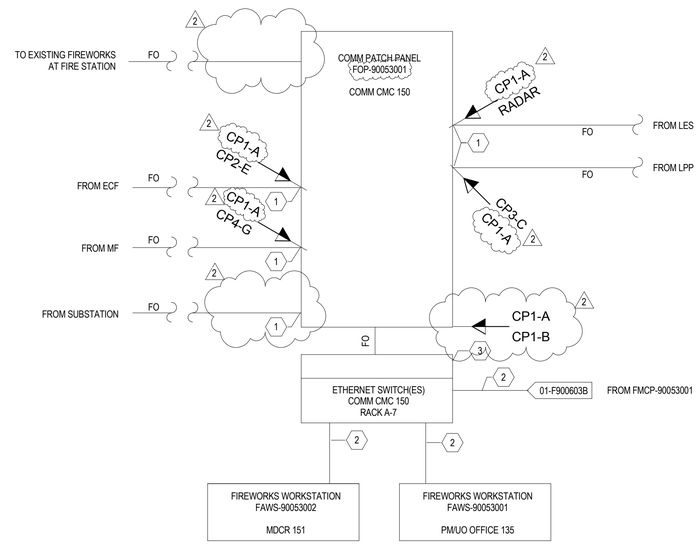

2 / F-900604B

FIRE ALARM NETWORK ONE-LINE DIAGRAM

NTS

GENERAL NOTES:

A. FOR GENERAL FIRE PROTECTION LEGEND AND SYMBOLS, SEE SHEET F-900001B.

B. THE EXISTING FIREWORK SYSTEM AT THE FIRE STATION WILL SERVE AS THE PRIMARY MONITORING STATION.

C. THE SYSTEM MUST BE CONFIGURED TO ALLOW DISTINCT SIGNALS TO BE SENT TO THE FIRE STATION FOR EACH INDIVIDUAL BUILDING.

D. THE NEW FIREWORKS SYSTEM MUST BE COMPATIBLE WITH THE EXISTING SYSTEM INSTALLED AT THE FIRE STATION. THE CP1-B FIRE ALARM CONTRACTOR IS RESPONSIBLE FOR ENSURING COMPATIBILITY BETWEEN THE NEW SYSTEMS AND THE EXISTING FIREWORKS SYSTEM.

E. FA/MNS FIBER OPTIC CABLING FROM THE FIRESTATION, LES, LPP, MF, ECF & SUBSTATION WILL BE INSTALLED UNDER A DIFFERENT CONSTRUCTION PACKAGE AS INDICATED.

KEYNOTES:

1. SINGLE MODE FIBER OPTIC CABLE. TWO STRANDS WILL BE PATCHED TO THE OUTSIDE PLANT FIBER TO THE FIRE STATION TO PROVIDE A PATH TO THE PRIMARY MONITORING STATION. TWO STRANDS SHALL BE PATCHED TO WORKSTATIONS LOCATED IN THE MCF.
2. CATEGORY 6 CABLE
3. PROVIDE TRANSCEIVER OF SFP MODULES AS REQUIRED FOR SINGLE MODE FIBER.

US Army Corps of Engineers ®
Alaska District

CONTRACT NO. ____ CONTRACTOR ____ CITY ____ STATE ____
Recommended: ____ PRIME CONTRACTOR
Approved: ____ RESIDENT ENGINEER
Date: ____

Ch.	Description	Date	Appr.
01	AM007 AMENDMENT SEVEN	2017.01.12	BTN
00	Acom READY TO ADVERTISE SUBMITTAL	2016.11.18	BTN

Date: 2016.11.18
Dwg Scale: AS NOTED
Plot Scale: 1:1
File Name: CLR_ISDR_MCF_FP_2015
Drawing #: AF-141-391-02
CLR039a

NOT FOR CONSTRUCTION

Designed: RDV
Drawn: RDV
Reviewed: RJE
Submitted: BTN

U.S. ARMY ENGINEER DISTRICT
CORPS OF ENGINEERS
ANCHORAGE, ALASKA

AECOM + TETRA TECH JV

W911KB-17-R-0010
MDA657

CLEAR AFS, ALASKA
LONG RANGE DISCRIMINATION RADAR
CONSTRUCTION PACKAGE 1 - VOLUME 2
FIRE ALARM / MASS NOTIFICATION NETWORK
DIAGRAM & TRANSMITTER SCHEDULE

COMMONWEALTH OF MASSACHUSETTS
ROBERT D. HALL
FIRE PROTECTION
No. 50237
REGISTERED PROFESSIONAL ENGINEER
11/18/16

RTA

Reference number:
F-900604B

PLOTTED ON 1/11/2017 2:55:01 PM

C:\Users\SEAN.KEATING\Documents\CLR_LRDR_MCF_FP_2015_sean.keating@tetratech.com.rvt

GENERAL NOTES:

A. FOR GENERAL FIRE PROTECTION LEGEND AND SYMBOLS, SEE SHEET F-900001B.

KEYNOTES:

1. PROVIDE ELECTRICAL FILTERS FOR EACH CIRCUIT ENTERING AND LEAVING THE EMI SHIELDED ROOM. ALL PENETRATIONS THROUGH THE EMI SHIELD SHALL BE PROTECTED IN ACCORDANCE WITH MIL-HDBK-1195.

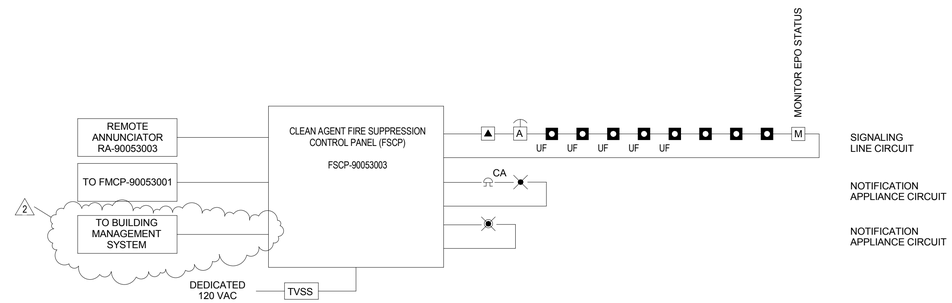

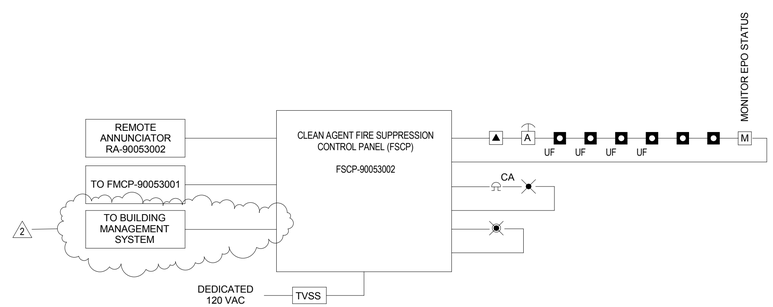

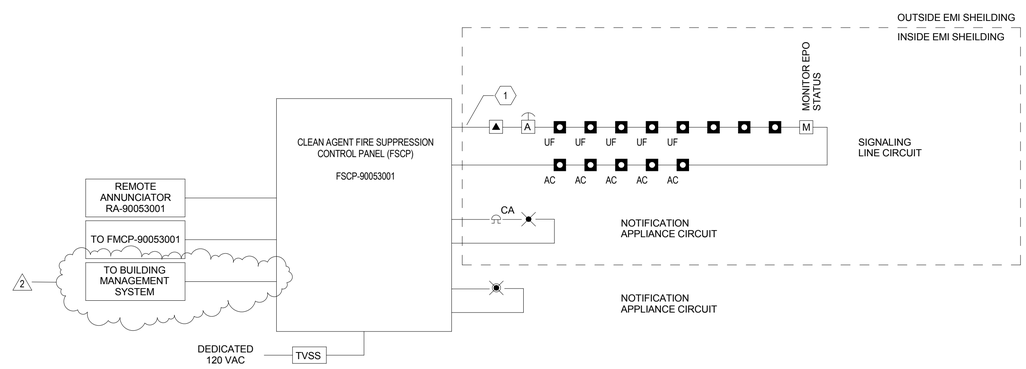

US Army Corps of Engineers ®
Alaska District

CONTRACT NO. ____ CONTRACTOR ____ CITY ____ STATE ____
Recommended: ____ Approved: ____ Date: ____
PRIME CONTRACTOR ____ RESIDENT ENGINEER ____

No.	Action	Description	Date	Approved
A07	AMENDMENT SEVEN		2017.01.12	
		READY TO ADVERTISE SUBMITTAL	2016.11.18	BTN

Date: 2016.11.18
Dwg Scale: AS NOTED
Plot Scale: 1:1
File Name: CLR_LRDR_MCF_FP_2015
Drawing #: AF-141-391-02

CLR039a

NOT FOR CONSTRUCTION

Designed: RDV
Drawn: RDV
Reviewed: RJE
Submitted: BTN

U.S. ARMY ENGINEER DISTRICT
CORPS OF ENGINEERS
ANCHORAGE, ALASKA

AECOM + TETRA TECH JV

W911KB-17-R-0010
MDA657

CLEAR AFS, ALASKA
LONG RANGE DISCRIMINATION RADAR
CONSTRUCTION PACKAGE 1 - VOLUME 2
CLEAN AGENT SYSTEM RISER DIAGRAMS

COMMONWEALTH OF MASSACHUSETTS
ROBERT D. HALL
FIRE PROTECTION
No. 50237
REGISTERED PROFESSIONAL ENGINEER
11/18/16

RTA

Reference number:
F-900605B

PLOTTED ON 1/12/2017 7:58:53 AM

C:\Users\rob.viall\Documents\CLR_LRDR_MCF_FP_2015_Rob.Viall@tetratech.com.rvt