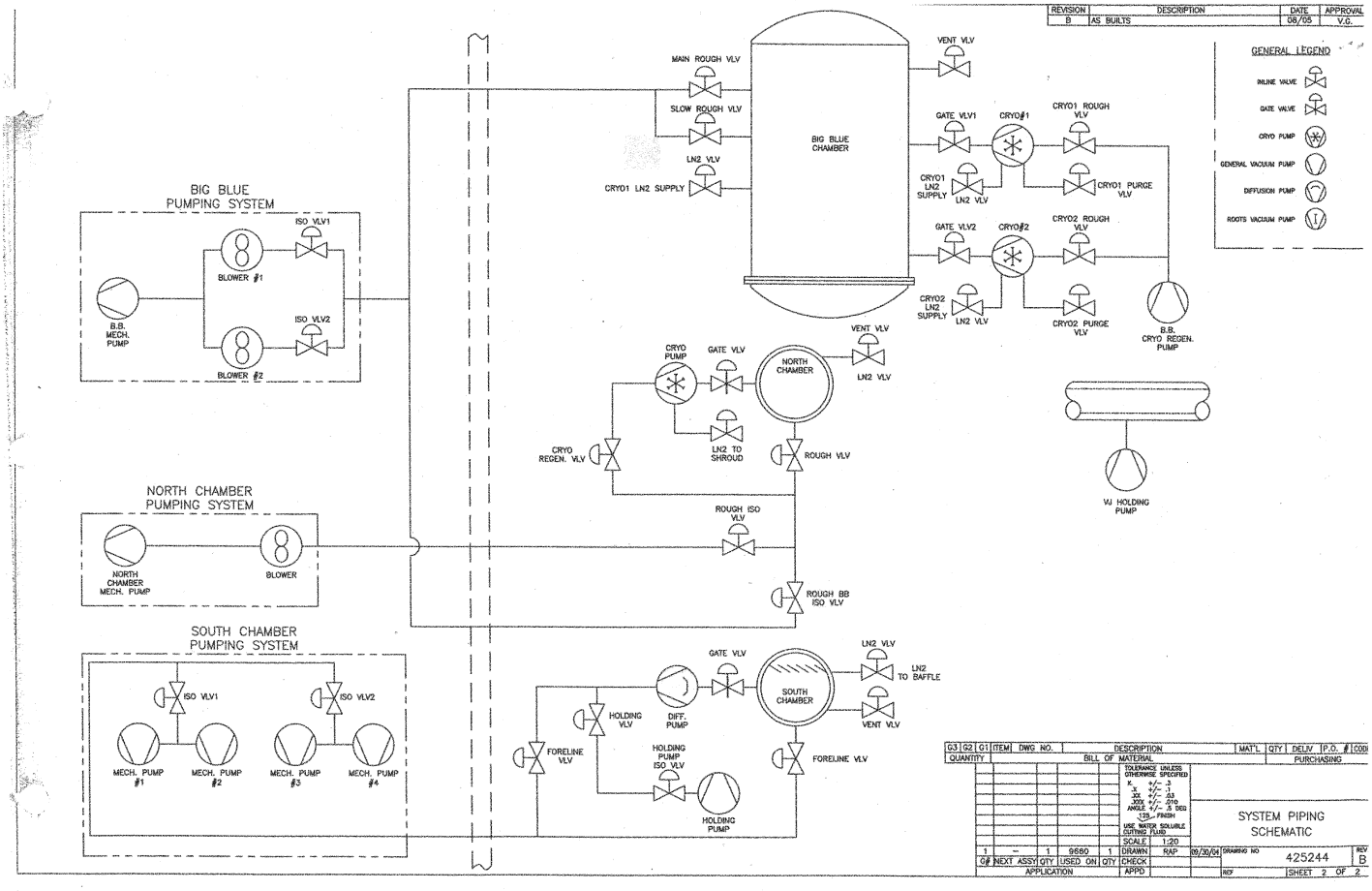
REVISION
DESCRIPTION
DATE
APPROVAL
B
AS BUILTS
08/05
V.G.
GENERAL LEGEND
INLINE VALVE
GATE VALVE
CRYO PUMP
GENERAL VACUUM PUMP
DIFFUSION PUMP
ROOTS VACUUM PUMP
BIG BLUE PUMPING SYSTEM
ISO VLV1
BLOWER #1
B.B. MECH. PUMP
ISO VLV2
BLOWER #2
MAIN ROUGH VLV
SLOW ROUGH VLV
LN2 VLV
CRYO1 LN2 SUPPLY
BIG BLUE CHAMBER
VENT VLV
GATE VLV1
CRYO#1
CRYO1 ROUGH VLV
CRYO1 LN2 SUPPLY
LN2 VLV
CRYO1 PURGE VLV
GATE VLV2
CRYO#2
CRYO2 ROUGH VLV
CRYO2 LN2 SUPPLY
LN2 VLV
CRYO2 PURGE VLV
B.B. CRYO REGEN. PUMP
CRYO PUMP
GATE VLV
NORTH CHAMBER
VENT VLV
LN2 VLV
CRYO REGEN. VLV
LN2 TO SHROUD
ROUGH VLV
VJ HOLDING PUMP
NORTH CHAMBER PUMPING SYSTEM
NORTH CHAMBER MECH. PUMP
BLOWER
ROUGH ISO VLV
ROUGH BB ISO VLV
SOUTH CHAMBER PUMPING SYSTEM
ISO VLV1
ISO VLV2
MECH. PUMP #1
MECH. PUMP #2
MECH. PUMP #3
MECH. PUMP #4
GATE VLV
LN2 VLV
LN2 TO BAFFLE
SOUTH CHAMBER
VENT VLV
HOLDING VLV
DIFF. PUMP
FORELINE VLV
HOLDING PUMP ISO VLV
HOLDING PUMP
FORELINE VLV
G3 G2 G1 ITEM DWG NO. DESCRIPTION MAT'L QTY DELIV P.O. # CODE
QUANTITY BILL OF MATERIAL PURCHASING
TOLERANCE UNLESS OTHERWISE SPECIFIED
X +/- .3
.X +/- .1
.XX +/- .03
.XXX +/- .010
ANGLE +/- .5 DEG
125 FINISH
USE WATER SOLUBLE CUTTING FLUID
SCALE 1:20
1 – 1 9680 1 DRAWN RAP 09/30/04
G# NEXT ASSY QTY USED ON QTY CHECK
APPLICATION APPD
SYSTEM PIPING SCHEMATIC
DRAWING NO 425244
REV B
REF
SHEET 2 OF 2

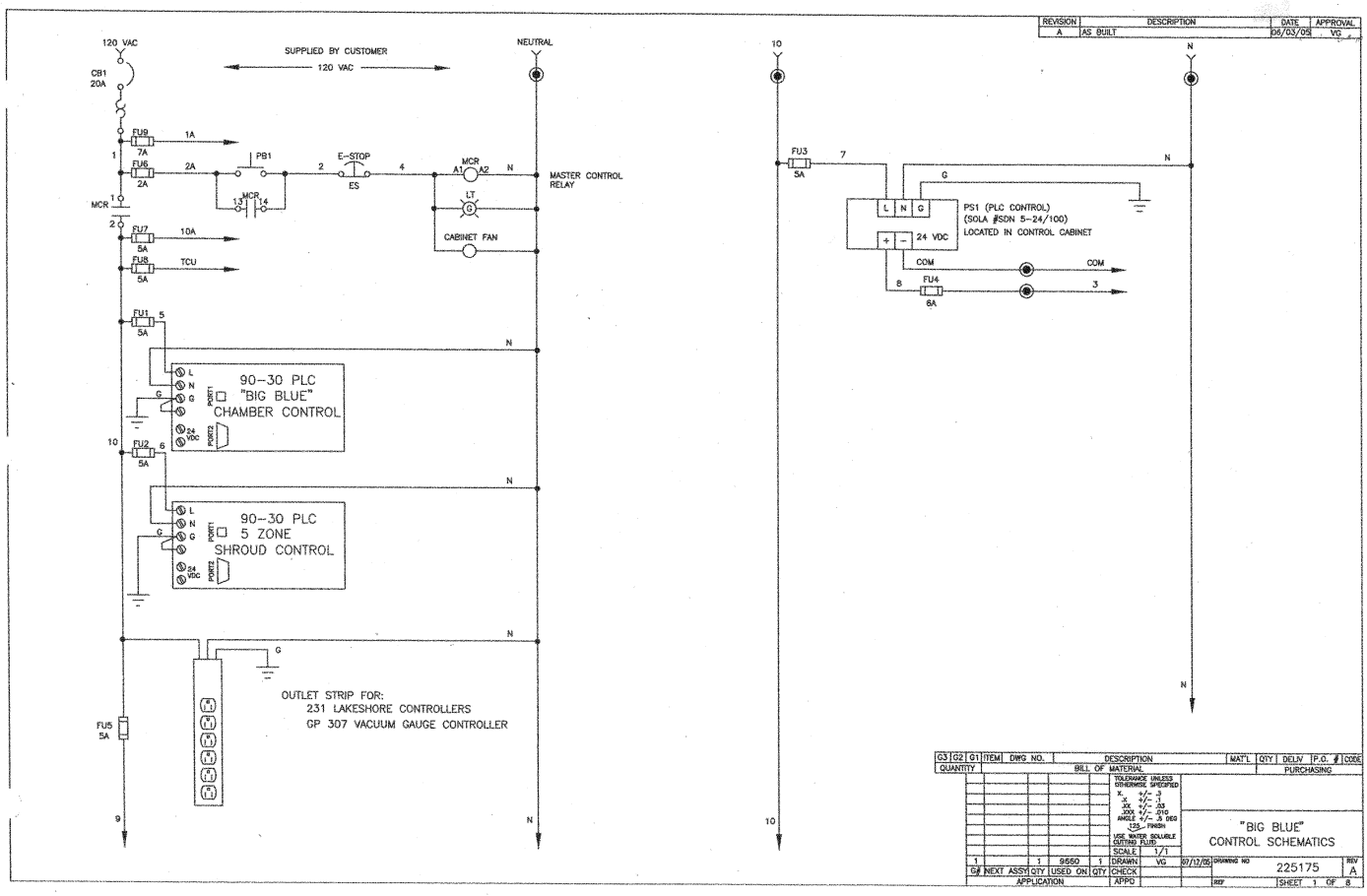
120 VAC
CB1
20A
SUPPLIED BY CUSTOMER
120 VAC
NEUTRAL
FU9
7A
1A
FU6
2A
2A
PB1
E-STOP
ES
MCR
A1
A2
N
MASTER CONTROL RELAY
LT
CABINET FAN
FU7
5A
10A
FU8
5A
TCU
FU1
5A
90-30 PLC
"BIG BLUE"
CHAMBER CONTROL
FU2
5A
90-30 PLC
5 ZONE
SHROUD CONTROL
OUTLET STRIP FOR:
231 LAKESHORE CONTROLLERS
GP 307 VACUUM GAUGE CONTROLLER
FU5
5A
FU3
5A
PS1 (PLC CONTROL)
(SOLA #SDN 5-24/100)
LOCATED IN CONTROL CABINET
24 VDC
COM
FU4
6A
REVISION
DESCRIPTION
DATE
APPROVAL
A
AS BUILT
06/03/05
VG
BILL OF MATERIAL
PURCHASING
"BIG BLUE"
CONTROL SCHEMATICS
DRAWING NO
225175
REV
A
SHEET 1 OF 8

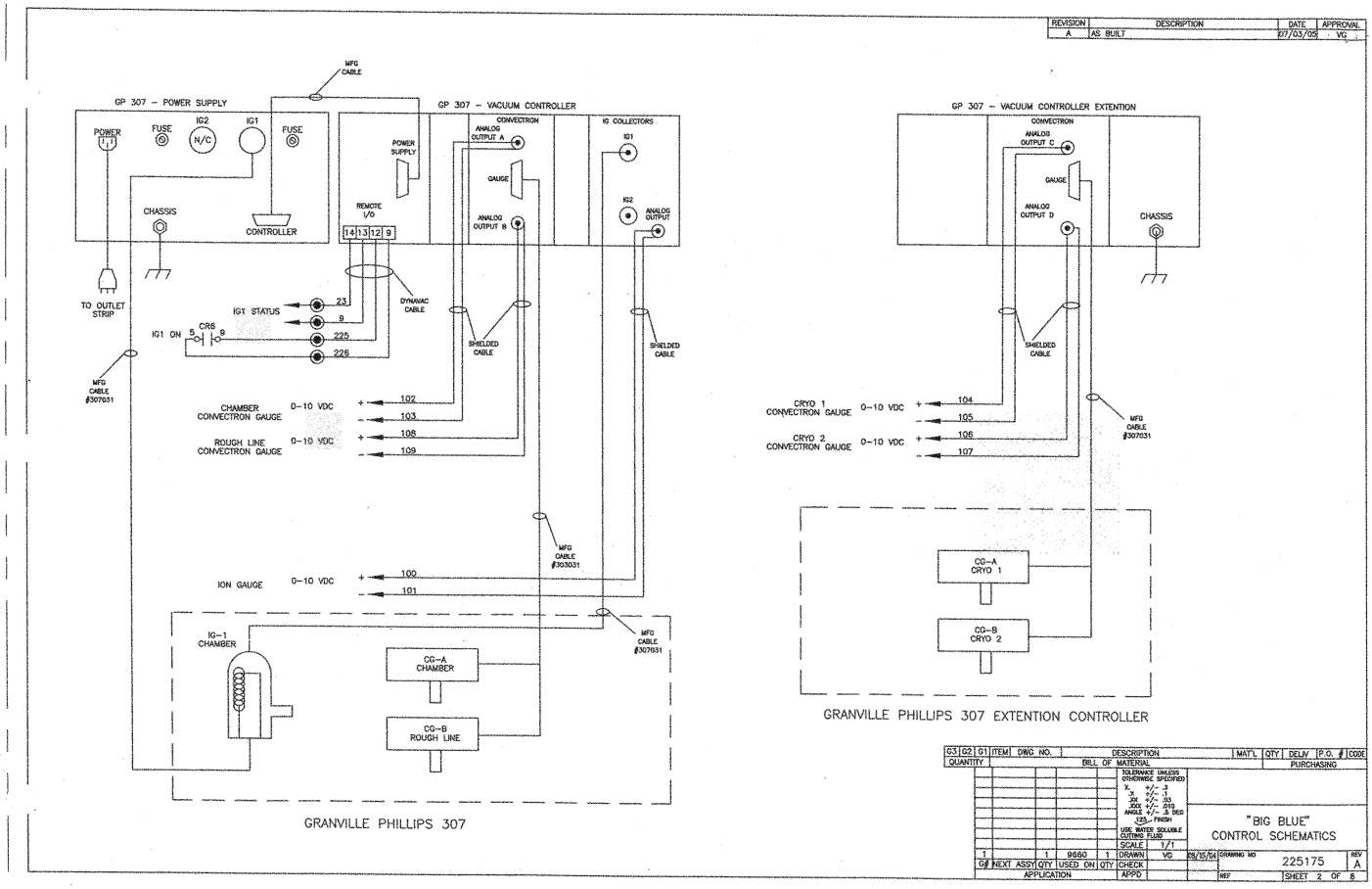
REVISION
DESCRIPTION
DATE
APPROVAL
A
AS BUILT
07/03/05
VG
MFG CABLE
GP 307 – POWER SUPPLY
POWER
FUSE
IG2
N/C
IG1
FUSE
CHASSIS
CONTROLLER
TO OUTLET STRIP
MFG CABLE #307031
GP 307 – VACUUM CONTROLLER
POWER SUPPLY
REMOTE I/O
14 13 12 9
CONVECTRON
ANALOG OUTPUT A
GAUGE
ANALOG OUTPUT B
IG COLLECTORS
IG1
IG2
ANALOG OUTPUT
DYNAVAC CABLE
IG1 STATUS
23
9
IG1 ON
CR6
5
9
225
226
SHIELDED CABLE
SHIELDED CABLE
CHAMBER CONVECTRON GAUGE
0–10 VDC
+
–
102
103
ROUGH LINE CONVECTRON GAUGE
0–10 VDC
+
–
108
109
MFG CABLE #303031
ION GAUGE
0–10 VDC
+
–
100
101
MFG CABLE #307031
IG–1 CHAMBER
CG–A CHAMBER
CG–B ROUGH LINE
GRANVILLE PHILLIPS 307
GP 307 – VACUUM CONTROLLER EXTENTION
CONVECTRON
ANALOG OUTPUT C
GAUGE
ANALOG OUTPUT D
CHASSIS
SHIELDED CABLE
CRYO 1 CONVECTRON GAUGE
0–10 VDC
+
–
104
105
CRYO 2 CONVECTRON GAUGE
0–10 VDC
+
–
106
107
MFG CABLE #307031
CG–A CRYO 1
CG–B CRYO 2
GRANVILLE PHILLIPS 307 EXTENTION CONTROLLER
G3 G2 G1 ITEM DWG. NO. DESCRIPTION MAT'L QTY DELIV P.O. # CODE
QUANTITY
BILL OF MATERIAL
PURCHASING
TOLERANCE UNLESS OTHERWISE SPECIFIED
X +/– .1
.XX +/– .03
.XXX +/– .010
ANGLE +/– .5 DEG
125–/– FINISH
USE WATER SOLUBLE CUTTING FLUID
SCALE 1/1
1 1 9660 1
DRAWN VG 09/15/04
CHECK
APP'D
"BIG BLUE"
CONTROL SCHEMATICS
DRAWING NO 225175
REV A
REF
SHEET 2 OF 8
G# NEXT ASSY QTY USED ON QTY
APPLICATION

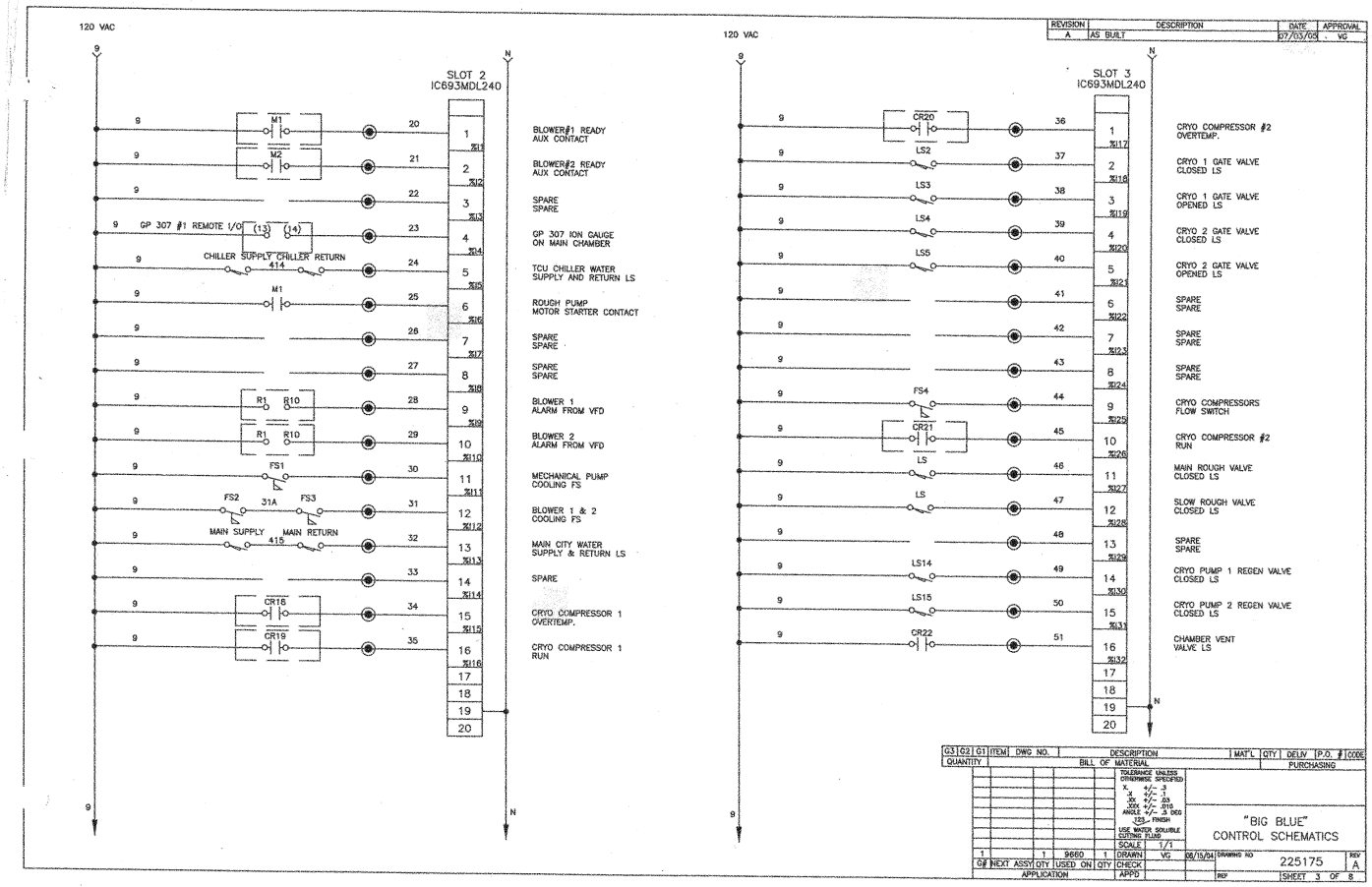
120 VAC
SLOT 2
IC693MDL240
M1
M2
GP 307 #1 REMOTE I/O
CHILLER SUPPLY CHILLER RETURN
414
R1 R10
FS1
FS2 31A FS3
MAIN SUPPLY MAIN RETURN
415
CR16
CR19
BLOWER#1 READY AUX CONTACT
BLOWER#2 READY AUX CONTACT
SPARE SPARE
GP 307 ION GAUGE ON MAIN CHAMBER
TCU CHILLER WATER SUPPLY AND RETURN LS
ROUGH PUMP MOTOR STARTER CONTACT
SPARE SPARE
SPARE SPARE
BLOWER 1 ALARM FROM VFD
BLOWER 2 ALARM FROM VFD
MECHANICAL PUMP COOLING FS
BLOWER 1 & 2 COOLING FS
MAIN CITY WATER SUPPLY & RETURN LS
SPARE
CRYO COMPRESSOR 1 OVERTEMP.
CRYO COMPRESSOR 1 RUN
120 VAC
SLOT 3
IC693MDL240
CR20
LS2
LS3
LS4
LS5
FS4
CR21
LS
LS14
LS15
CR22
CRYO COMPRESSOR #2 OVERTEMP.
CRYO 1 GATE VALVE CLOSED LS
CRYO 1 GATE VALVE OPENED LS
CRYO 2 GATE VALVE CLOSED LS
CRYO 2 GATE VALVE OPENED LS
SPARE SPARE
SPARE SPARE
SPARE SPARE
CRYO COMPRESSORS FLOW SWITCH
CRYO COMPRESSOR #2 RUN
MAIN ROUGH VALVE CLOSED LS
SLOW ROUGH VALVE CLOSED LS
SPARE SPARE
CRYO PUMP 1 REGEN VALVE CLOSED LS
CRYO PUMP 2 REGEN VALVE CLOSED LS
CHAMBER VENT VALVE LS
REVISION A
AS BUILT
DATE 07/03/05
APPROVAL VG
"BIG BLUE"
CONTROL SCHEMATICS
225175
SHEET 3 OF 8

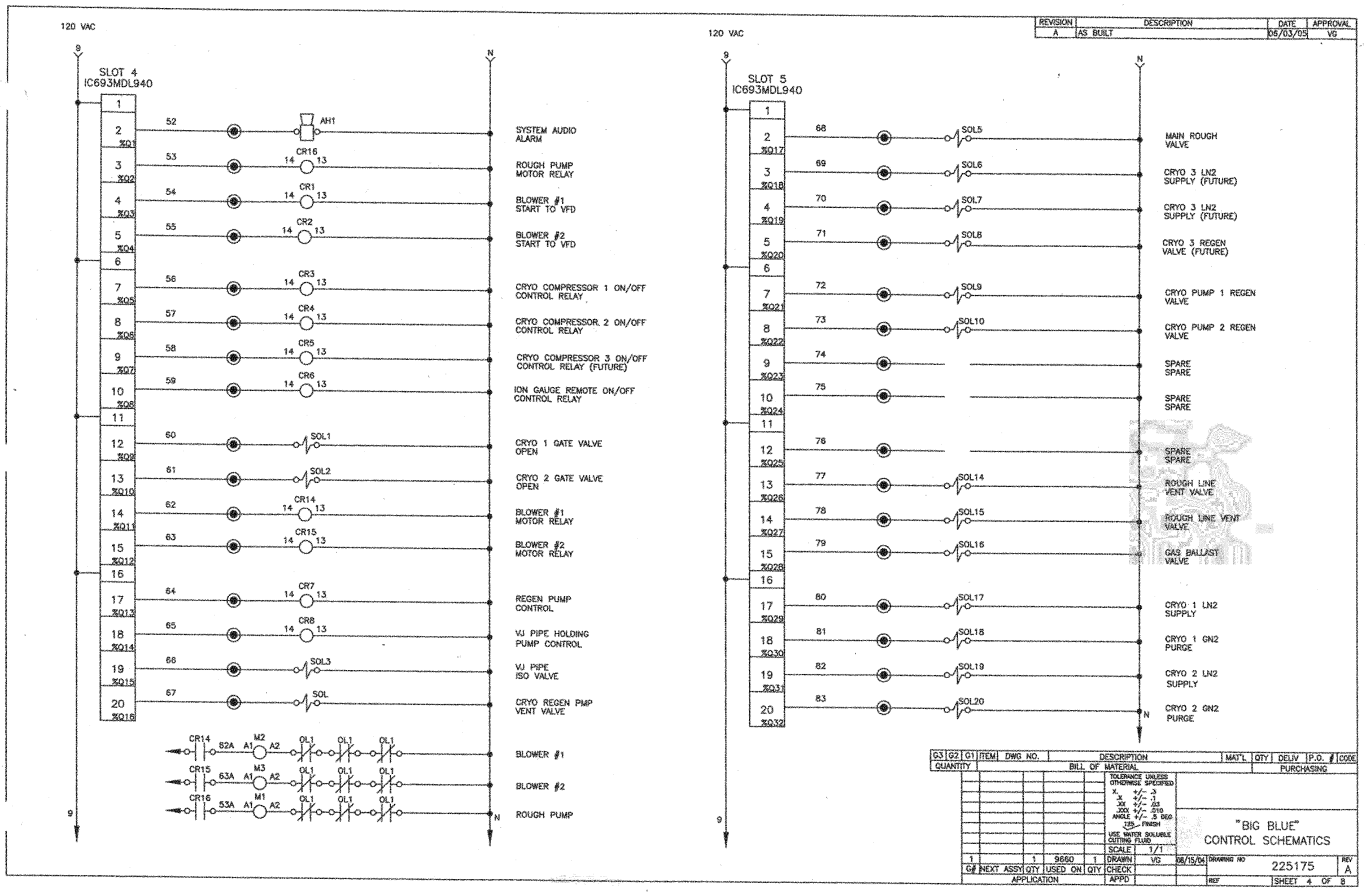
120 VAC
SLOT 4
IC693MDL940
SYSTEM AUDIO ALARM
ROUGH PUMP MOTOR RELAY
BLOWER #1 START TO VFD
BLOWER #2 START TO VFD
CRYO COMPRESSOR 1 ON/OFF CONTROL RELAY
CRYO COMPRESSOR 2 ON/OFF CONTROL RELAY
CRYO COMPRESSOR 3 ON/OFF CONTROL RELAY (FUTURE)
ION GAUGE REMOTE ON/OFF CONTROL RELAY
CRYO 1 GATE VALVE OPEN
CRYO 2 GATE VALVE OPEN
BLOWER #1 MOTOR RELAY
BLOWER #2 MOTOR RELAY
REGEN PUMP CONTROL
VJ PIPE HOLDING PUMP CONTROL
VJ PIPE ISO VALVE
CRYO REGEN PMP VENT VALVE
BLOWER #1
BLOWER #2
ROUGH PUMP
120 VAC
SLOT 5
IC693MDL940
MAIN ROUGH VALVE
CRYO 3 LN2 SUPPLY (FUTURE)
CRYO 3 LN2 SUPPLY (FUTURE)
CRYO 3 REGEN VALVE (FUTURE)
CRYO PUMP 1 REGEN VALVE
CRYO PUMP 2 REGEN VALVE
SPARE
ROUGH LINE VENT VALVE
GAS BALLAST VALVE
CRYO 1 LN2 SUPPLY
CRYO 1 GN2 PURGE
CRYO 2 LN2 SUPPLY
CRYO 2 GN2 PURGE
REVISION
DESCRIPTION
DATE
APPROVAL
A
AS BUILT
06/03/05
VG
BILL OF MATERIAL
PURCHASING
"BIG BLUE"
CONTROL SCHEMATICS
DRAWING NO
225175
REV
A
SHEET 4 OF 8

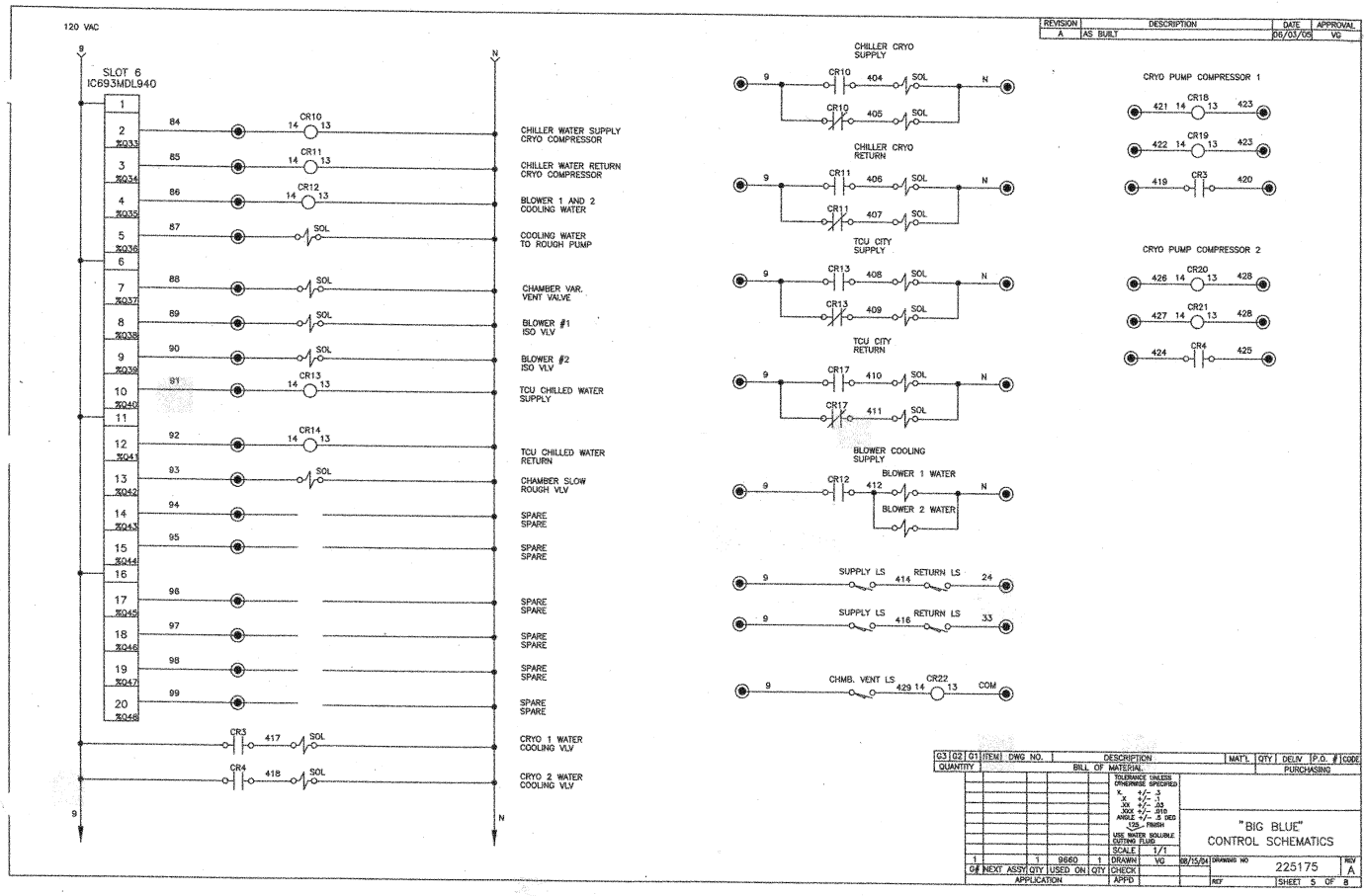
120 VAC
SLOT 6
IC693MDL940
CHILLER WATER SUPPLY CRYO COMPRESSOR
CHILLER WATER RETURN CRYO COMPRESSOR
BLOWER 1 AND 2 COOLING WATER
COOLING WATER TO ROUGH PUMP
CHAMBER VAR. VENT VALVE
BLOWER #1 ISO VLV
BLOWER #2 ISO VLV
TCU CHILLED WATER SUPPLY
TCU CHILLED WATER RETURN
CHAMBER SLOW ROUGH VLV
SPARE
CRYO 1 WATER COOLING VLV
CRYO 2 WATER COOLING VLV
CHILLER CRYO SUPPLY
CHILLER CRYO RETURN
TCU CITY SUPPLY
TCU CITY RETURN
BLOWER COOLING SUPPLY
BLOWER 1 WATER
BLOWER 2 WATER
SUPPLY LS
RETURN LS
CHMB. VENT LS
CRYO PUMP COMPRESSOR 1
CRYO PUMP COMPRESSOR 2
REVISION
DESCRIPTION
DATE
APPROVAL
AS BUILT
"BIG BLUE"
CONTROL SCHEMATICS
225175
SHEET 5 OF 8

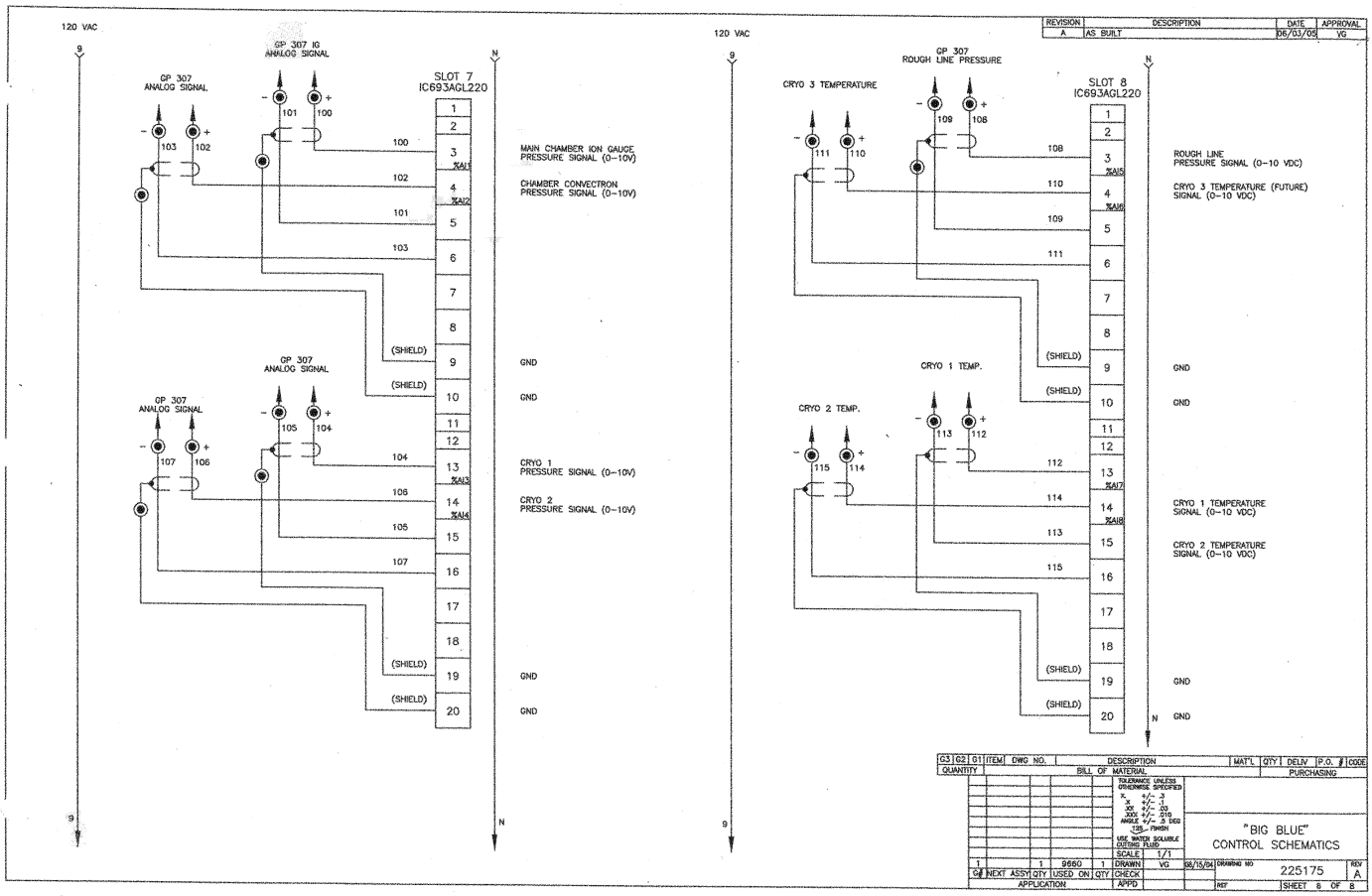
120 VAC
GP 307 IG ANALOG SIGNAL
GP 307 ANALOG SIGNAL
SLOT 7 IC693AGL220
MAIN CHAMBER ION GAUGE PRESSURE SIGNAL (0-10V)
CHAMBER CONVECTRON PRESSURE SIGNAL (0-10V)
GND
CRYO 1 PRESSURE SIGNAL (0-10V)
CRYO 2 PRESSURE SIGNAL (0-10V)
120 VAC
GP 307 ROUGH LINE PRESSURE
CRYO 3 TEMPERATURE
CRYO 1 TEMP.
CRYO 2 TEMP.
SLOT 8 IC693AGL220
ROUGH LINE PRESSURE SIGNAL (0-10 VDC)
CRYO 3 TEMPERATURE (FUTURE) SIGNAL (0-10 VDC)
CRYO 1 TEMPERATURE SIGNAL (0-10 VDC)
CRYO 2 TEMPERATURE SIGNAL (0-10 VDC)
REVISION A AS BUILT DATE 06/03/05 APPROVAL VG
"BIG BLUE" CONTROL SCHEMATICS
225175
SHEET 8 OF 8

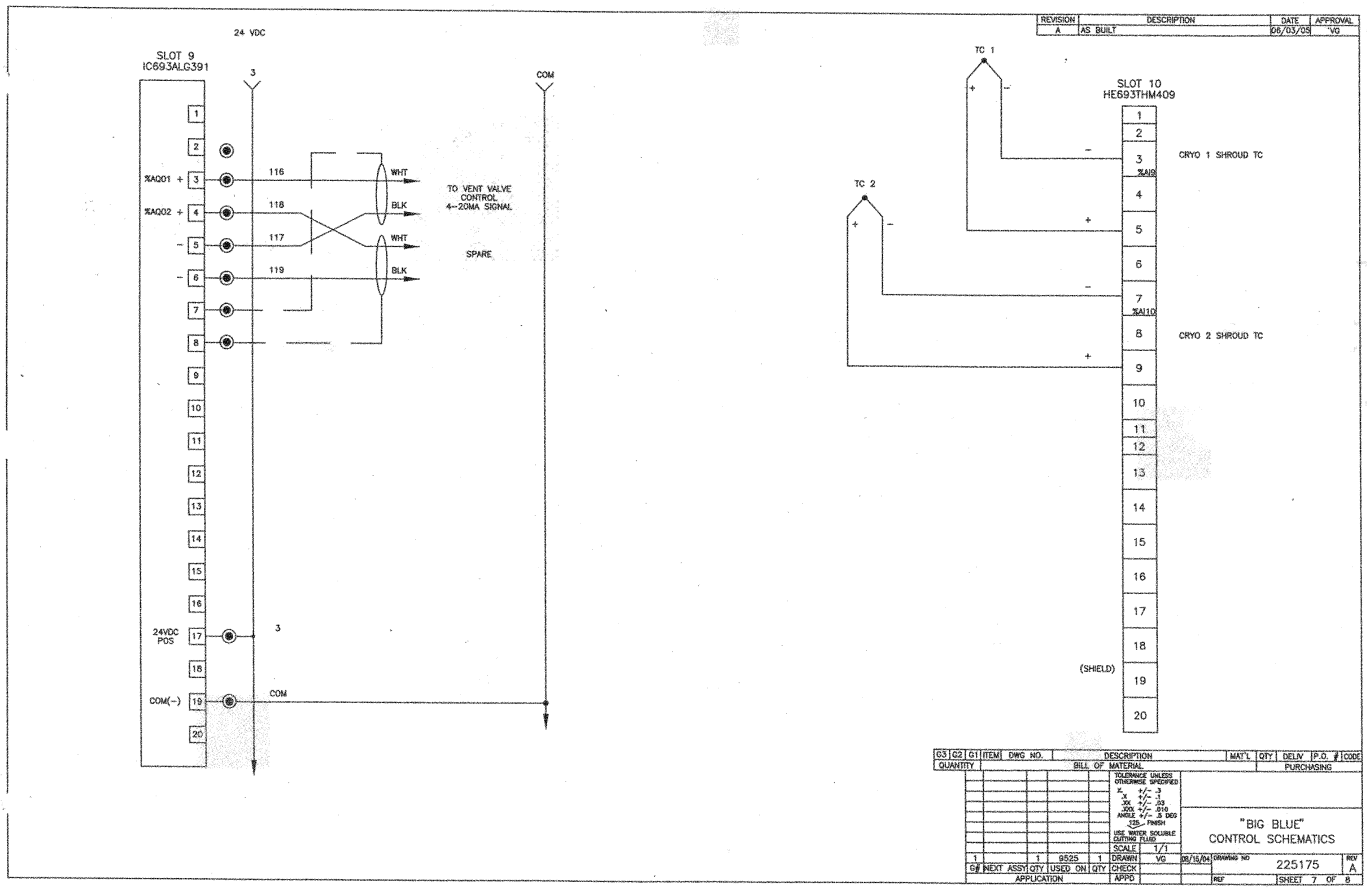
REVISION
DESCRIPTION
DATE
APPROVAL
A
AS BUILT
06/03/05
VG
24 VDC
SLOT 9
IC693ALG391
3
COM
%AQ01 +
%AQ02 +
116
118
117
119
WHT
BLK
WHT
BLK
TO VENT VALVE CONTROL 4--20MA SIGNAL
SPARE
24VDC POS
COM(-)
TC 1
TC 2
SLOT 10
HE693THM409
CRYO 1 SHROUD TC
%AI9
CRYO 2 SHROUD TC
%AI10
(SHIELD)
G3 G2 G1 ITEM DWG NO. DESCRIPTION MAT'L QTY DELIV P.O. # CODE
QUANTITY BILL OF MATERIAL PURCHASING
TOLERANCE UNLESS OTHERWISE SPECIFIED
.X +/- .3
.XX +/- .03
.XXX +/- .010
ANGLE +/- 0 DEG
125 FINISH
USE WATER SOLUBLE CUTTING FLUID
SCALE 1/1
DRAWN VG 08/15/04
CHECK
APPD
"BIG BLUE"
CONTROL SCHEMATICS
DRAWING NO 225175
REV A
SHEET 7 OF 8
G# NEXT ASSY QTY USED ON QTY
APPLICATION

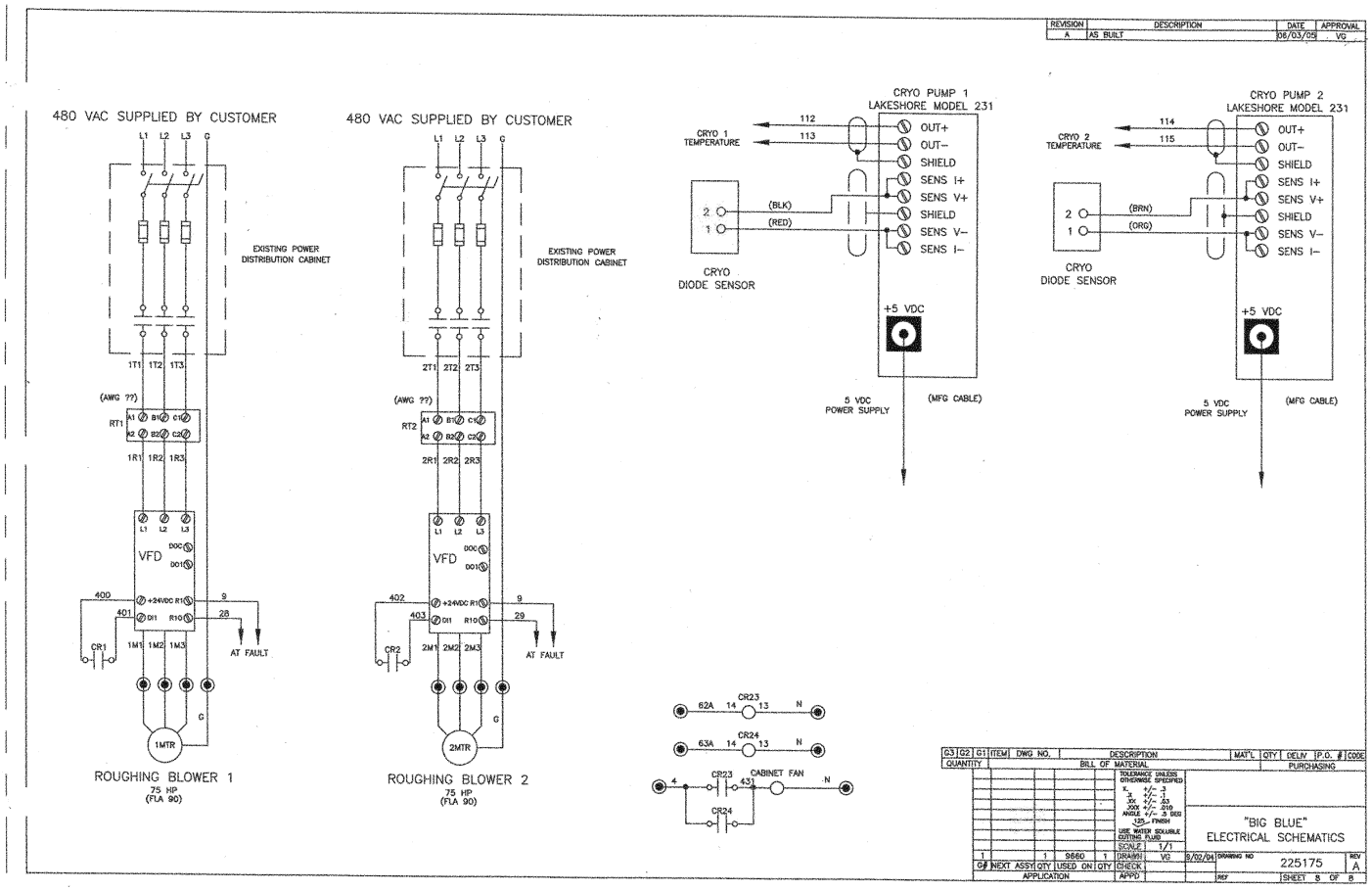
REVISION
DESCRIPTION
DATE
APPROVAL
A
AS BUILT
06/03/05
VG
480 VAC SUPPLIED BY CUSTOMER
EXISTING POWER DISTRIBUTION CABINET
(AWG ??)
RT1
RT2
VFD
AT FAULT
1MTR
2MTR
ROUGHING BLOWER 1
75 HP
(FLA 90)
ROUGHING BLOWER 2
CRYO PUMP 1
LAKESHORE MODEL 231
CRYO PUMP 2
LAKESHORE MODEL 231
CRYO 1 TEMPERATURE
CRYO 2 TEMPERATURE
OUT+
OUT−
SHIELD
SENS I+
SENS V+
SENS V−
SENS I−
(BLK)
(RED)
(BRN)
(ORG)
CRYO DIODE SENSOR
+5 VDC
5 VDC POWER SUPPLY
(MFG CABLE)
CR23
CR24
CABINET FAN
"BIG BLUE"
ELECTRICAL SCHEMATICS
225175
SHEET 8 OF 8

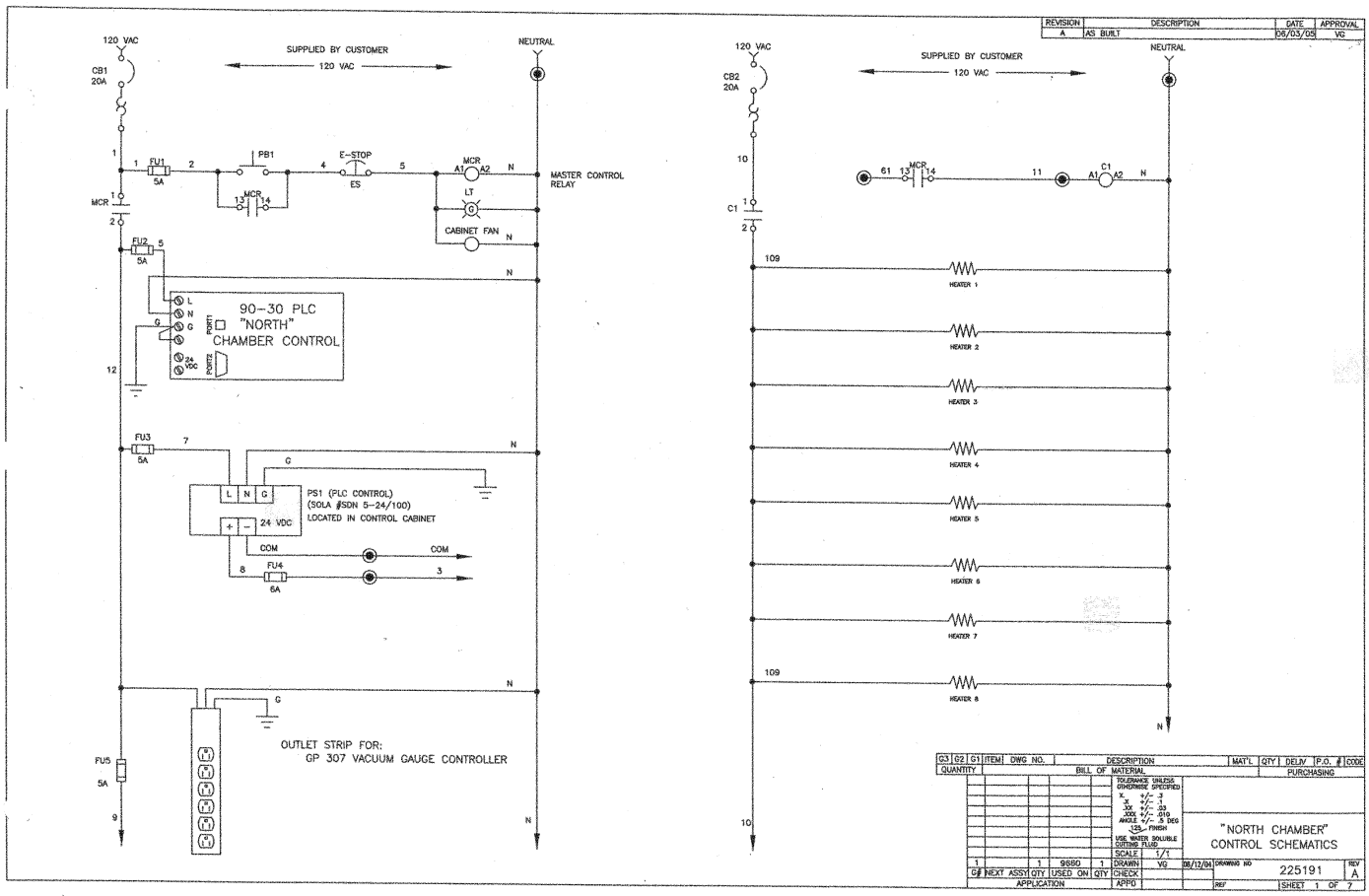
REVISION
A
DESCRIPTION
AS BUILT
DATE
06/03/05
APPROVAL
VG
120 VAC
CB1
20A
SUPPLIED BY CUSTOMER
120 VAC
NEUTRAL
FU1
5A
PB1
E-STOP
ES
MCR
A1
A2
N
MASTER CONTROL
RELAY
LT
CABINET FAN
MCR
FU2
5A
90-30 PLC
"NORTH"
CHAMBER CONTROL
PORT1
PORT2
24
VDC
FU3
5A
PS1 (PLC CONTROL)
(SOLA #SDN 5-24/100)
LOCATED IN CONTROL CABINET
24 VDC
COM
FU4
6A
OUTLET STRIP FOR:
GP 307 VACUUM GAUGE CONTROLLER
FU5
5A
CB2
20A
C1
HEATER 1
HEATER 2
HEATER 3
HEATER 4
HEATER 5
HEATER 6
HEATER 7
HEATER 8
BILL OF MATERIAL
TOLERANCE UNLESS OTHERWISE SPECIFIED
USE WATER SOLUBLE CUTTING FLUID
SCALE 1/1
DRAWN VG
CHECK
APPD
"NORTH CHAMBER"
CONTROL SCHEMATICS
DRAWING NO 225191
REV A
SHEET 1 OF 7

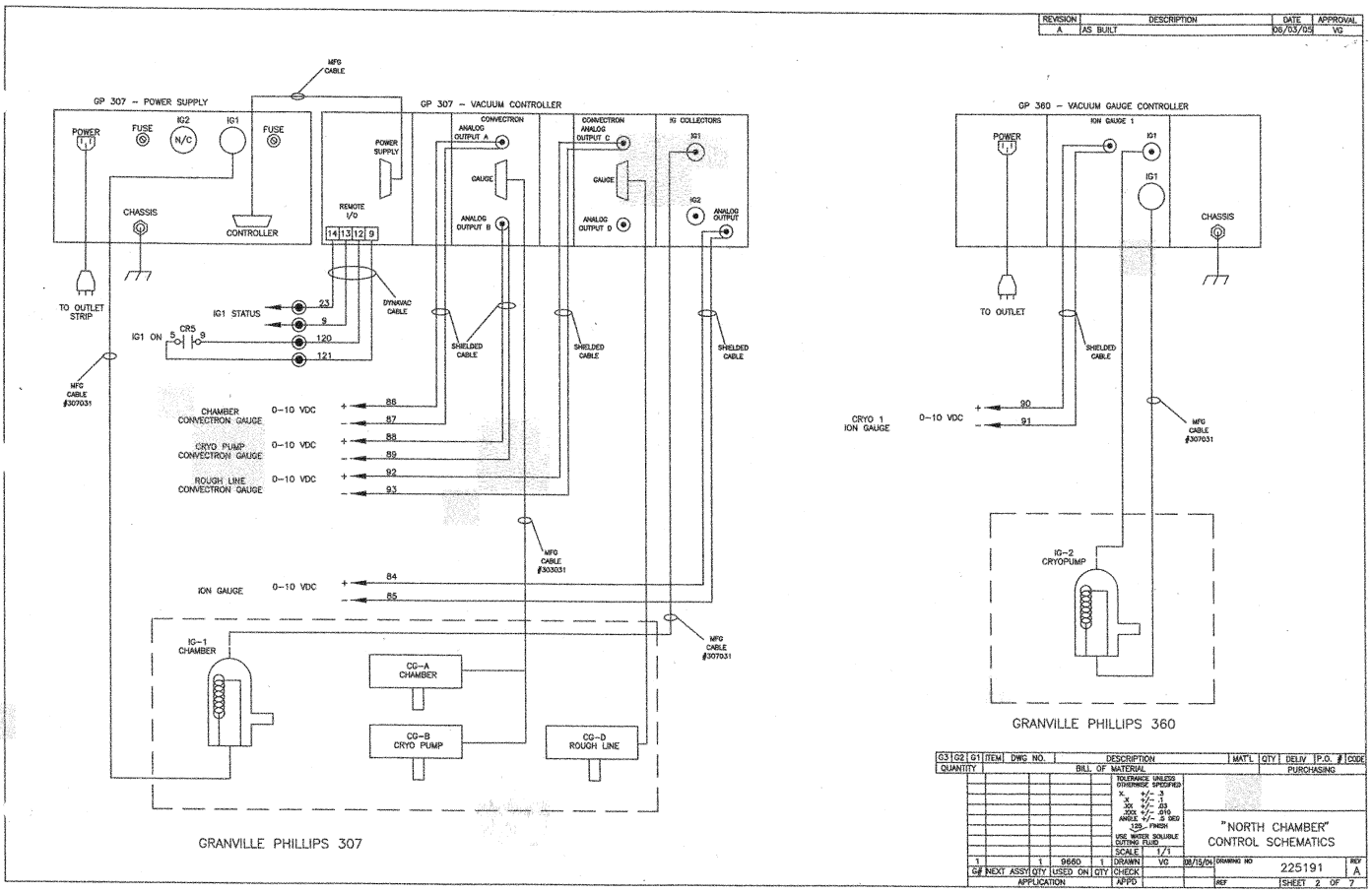
REVISION
A
AS BUILT
DATE
06/03/05
APPROVAL
VC
MFG CABLE
GP 307 – POWER SUPPLY
POWER
FUSE
IG2
N/C
IG1
FUSE
CHASSIS
CONTROLLER
TO OUTLET STRIP
MFG CABLE #307031
GP 307 – VACUUM CONTROLLER
POWER SUPPLY
REMOTE I/O
14 13 12 9
CONVECTRON
ANALOG OUTPUT A
GAUGE
ANALOG OUTPUT B
CONVECTRON ANALOG OUTPUT C
GAUGE
ANALOG OUTPUT D
IG COLLECTORS
IG1
IG2
ANALOG OUTPUT
DYNAVAC CABLE
IG1 STATUS
23
9
IG1 ON
5
CR5
3
120
121
SHIELDED CABLE
SHIELDED CABLE
SHIELDED CABLE
CHAMBER CONVECTRON GAUGE
0–10 VDC
+ 86
– 87
CRYO PUMP CONVECTRON GAUGE
0–10 VDC
+ 88
– 89
ROUGH LINE CONVECTRON GAUGE
0–10 VDC
+ 92
– 93
MFG CABLE #303031
ION GAUGE
0–10 VDC
+ 84
– 85
MFG CABLE #307031
IG–1 CHAMBER
CG–A CHAMBER
CG–B CRYO PUMP
CG–D ROUGH LINE
GRANVILLE PHILLIPS 307
GP 360 – VACUUM GAUGE CONTROLLER
ION GAUGE 1
POWER
IG1
IG1
CHASSIS
TO OUTLET
SHIELDED CABLE
CRYO 1 ION GAUGE
0–10 VDC
+ 90
– 91
MFG CABLE #307031
IG–2 CRYOPUMP
GRANVILLE PHILLIPS 360
G3 G2 G1 ITEM DWG NO. DESCRIPTION MAT'L QTY DELIV P.O. # CODE
QUANTITY
BILL OF MATERIAL
PURCHASING
TOLERANCE UNLESS OTHERWISE SPECIFIED
X +/- .3
XX +/- .1
XXX +/- .03
XXXX +/- .010
ANGLE +/- .5 DEG
125 - FINISH
USE WATER SOLUBLE CUTTING FLUID
SCALE 1/1
1 1 9660 1 DRAWN VC 08/15/04
G# NEXT ASSY QTY USED ON QTY CHECK
APPLICATION APPD
"NORTH CHAMBER"
CONTROL SCHEMATICS
DRAWING NO 225191
REV A
REF
SHEET 2 OF 7

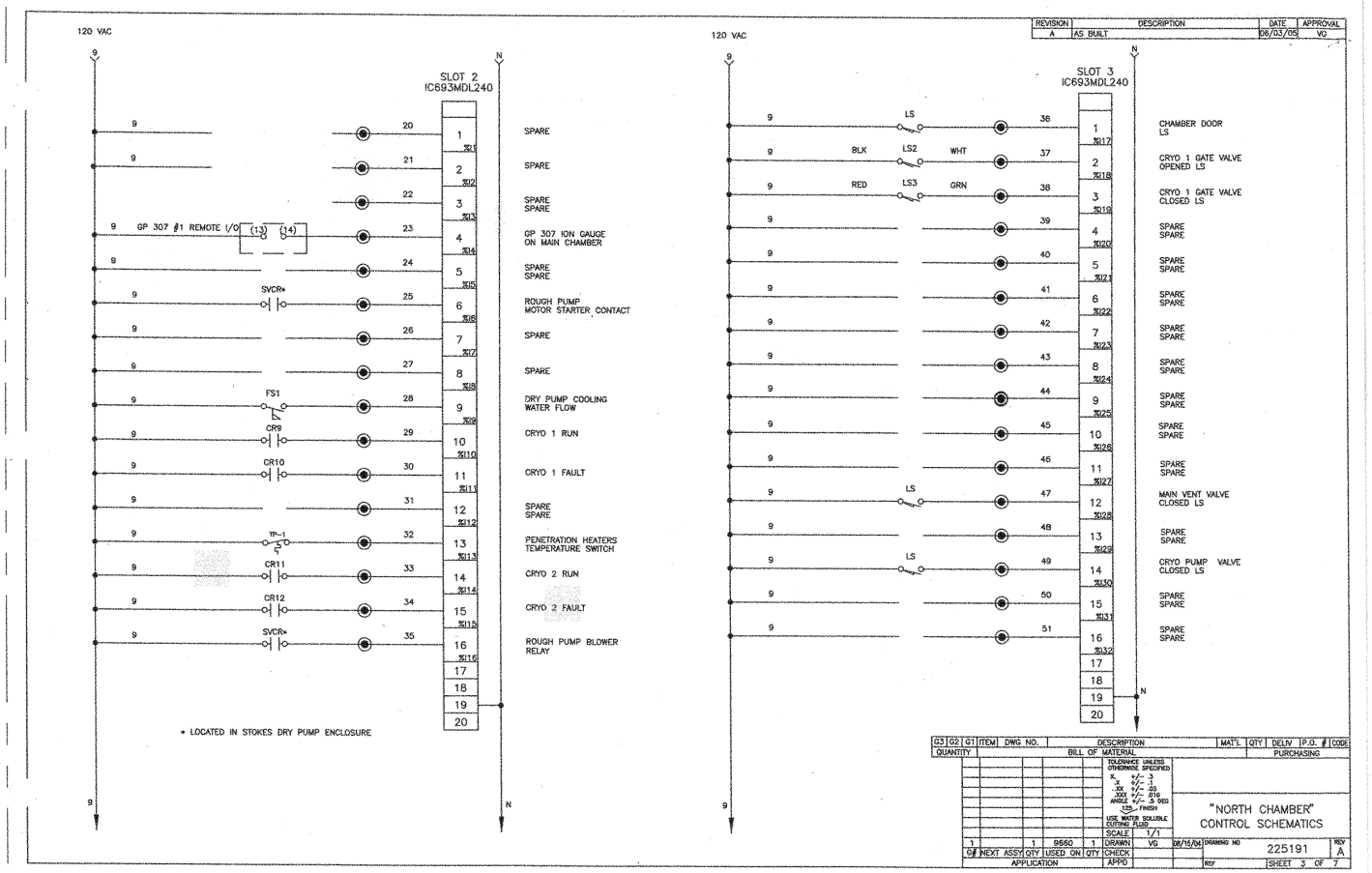
120 VAC
SLOT 2
IC693MDL240
SPARE
SPARE
SPARE
SPARE
GP 307 #1 REMOTE I/O
GP 307 ION GAUGE ON MAIN CHAMBER
SPARE
SPARE
SVCR*
ROUGH PUMP MOTOR STARTER CONTACT
SPARE
SPARE
FS1
DRY PUMP COOLING WATER FLOW
CR9
CRYO 1 RUN
CR10
CRYO 1 FAULT
SPARE
SPARE
TP-1
PENETRATION HEATERS TEMPERATURE SWITCH
CR11
CRYO 2 RUN
CR12
CRYO 2 FAULT
SVCR*
ROUGH PUMP BLOWER RELAY
* LOCATED IN STOKES DRY PUMP ENCLOSURE
120 VAC
SLOT 3
IC693MDL240
LS
CHAMBER DOOR LS
BLK
LS2
WHT
CRYO 1 GATE VALVE OPENED LS
RED
LS3
GRN
CRYO 1 GATE VALVE CLOSED LS
SPARE
MAIN VENT VALVE CLOSED LS
CRYO PUMP VALVE CLOSED LS
REVISION
DESCRIPTION
DATE
APPROVAL
A
AS BUILT
06/03/05
VG
BILL OF MATERIAL
PURCHASING
"NORTH CHAMBER"
CONTROL SCHEMATICS
225191
SHEET 3 OF 7

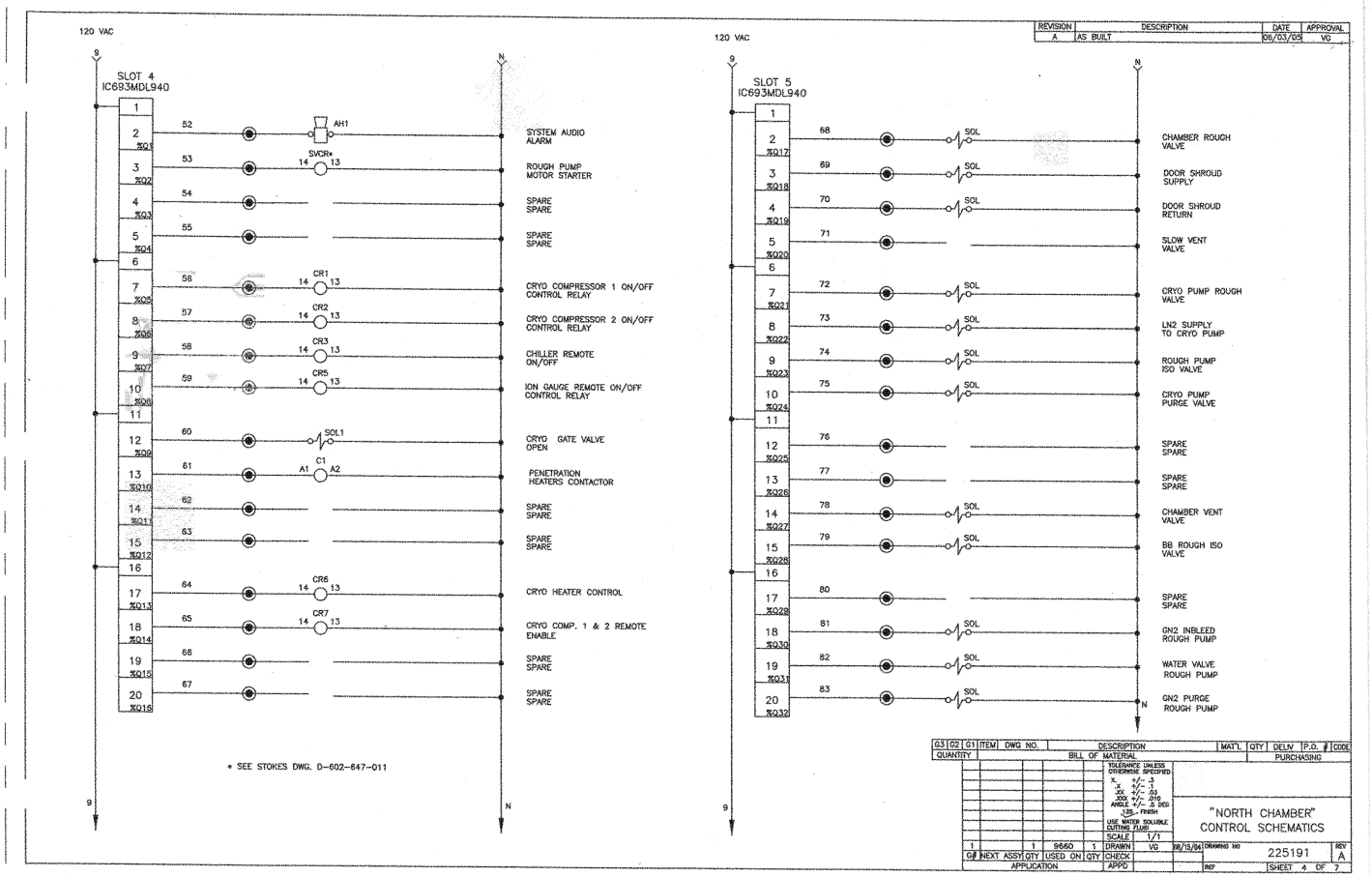
120 VAC
SLOT 4
IC693MDL940
SYSTEM AUDIO ALARM
ROUGH PUMP MOTOR STARTER
SPARE
SPARE
SPARE
SPARE
CRYO COMPRESSOR 1 ON/OFF CONTROL RELAY
CRYO COMPRESSOR 2 ON/OFF CONTROL RELAY
CHILLER REMOTE ON/OFF
ION GAUGE REMOTE ON/OFF CONTROL RELAY
CRYO GATE VALVE OPEN
PENETRATION HEATERS CONTACTOR
SPARE
SPARE
CRYO HEATER CONTROL
CRYO COMP. 1 & 2 REMOTE ENABLE
SPARE
SPARE
* SEE STOKES DWG. D-602-647-011
120 VAC
SLOT 5
IC693MDL940
CHAMBER ROUGH VALVE
DOOR SHROUD SUPPLY
DOOR SHROUD RETURN
SLOW VENT VALVE
CRYO PUMP ROUGH VALVE
LN2 SUPPLY TO CRYO PUMP
ROUGH PUMP ISO VALVE
CRYO PUMP PURGE VALVE
SPARE
SPARE
CHAMBER VENT VALVE
BB ROUGH ISO VALVE
SPARE
SPARE
GN2 INBLEED ROUGH PUMP
WATER VALVE ROUGH PUMP
GN2 PURGE ROUGH PUMP
REVISION | DESCRIPTION | DATE | APPROVAL
A | AS BUILT | 06/03/05 | VG
"NORTH CHAMBER" CONTROL SCHEMATICS
225191
SHEET 4 OF 7

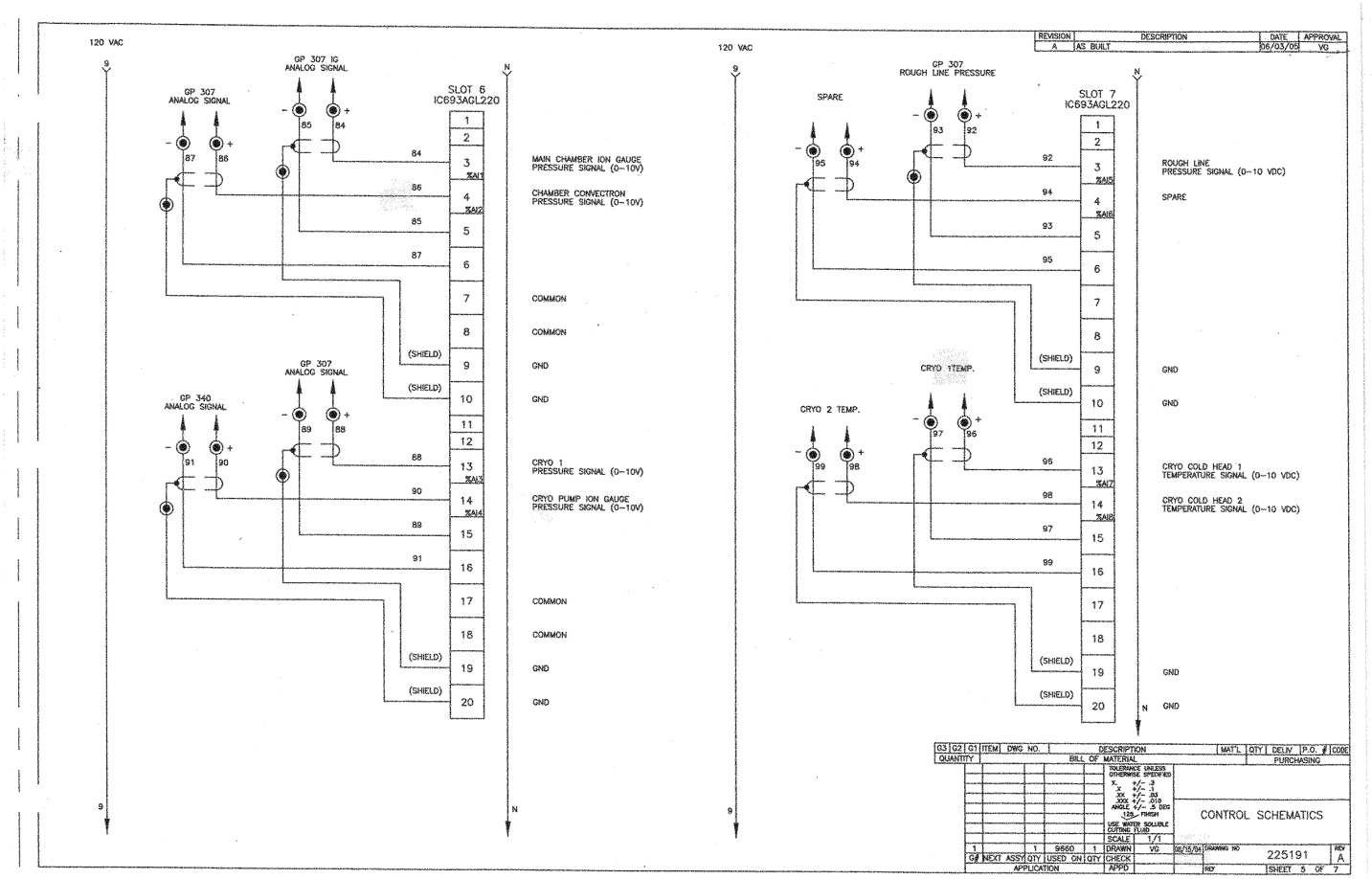
120 VAC
GP 307 ANALOG SIGNAL
GP 307 IG ANALOG SIGNAL
SLOT 6 IC693AGL220
MAIN CHAMBER ION GAUGE PRESSURE SIGNAL (0-10V)
CHAMBER CONVECTRON PRESSURE SIGNAL (0-10V)
COMMON
COMMON
GND
GND
GP 340 ANALOG SIGNAL
GP 307 ANALOG SIGNAL
CRYO 1 PRESSURE SIGNAL (0-10V)
CRYO PUMP ION GAUGE PRESSURE SIGNAL (0-10V)
COMMON
COMMON
GND
GND
120 VAC
SPARE
GP 307 ROUGH LINE PRESSURE
SLOT 7 IC693AGL220
ROUGH LINE PRESSURE SIGNAL (0-10 VDC)
SPARE
GND
GND
CRYO 1TEMP.
CRYO 2 TEMP.
CRYO COLD HEAD 1 TEMPERATURE SIGNAL (0-10 VDC)
CRYO COLD HEAD 2 TEMPERATURE SIGNAL (0-10 VDC)
GND
GND
REVISION A AS BUILT DESCRIPTION DATE 06/03/05 APPROVAL VG
BILL OF MATERIAL
CONTROL SCHEMATICS
225191
SHEET 5 OF 7

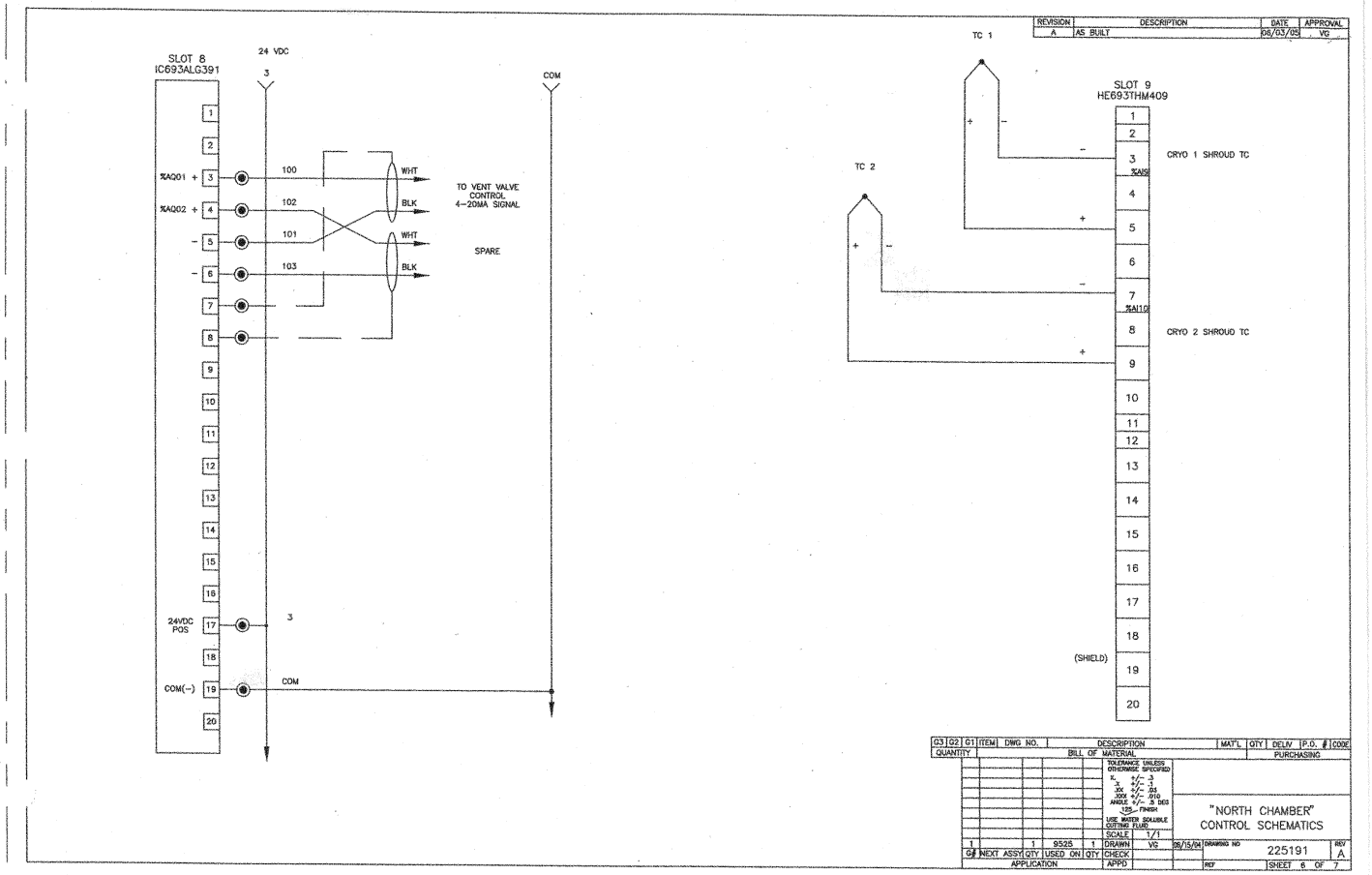
REVISION
DESCRIPTION
DATE
APPROVAL
A
AS BUILT
08/03/05
VG
SLOT 8
IC693ALG391
24 VDC
3
COM
%AQ01 +
%AQ02 +
24VDC POS
COM(-)
100
102
101
103
WHT
BLK
TO VENT VALVE CONTROL 4-20MA SIGNAL
SPARE
TC 1
TC 2
SLOT 9
HE693THM409
CRYO 1 SHROUD TC
CRYO 2 SHROUD TC
(SHIELD)
"NORTH CHAMBER"
CONTROL SCHEMATICS
225191
SHEET 6 OF 7

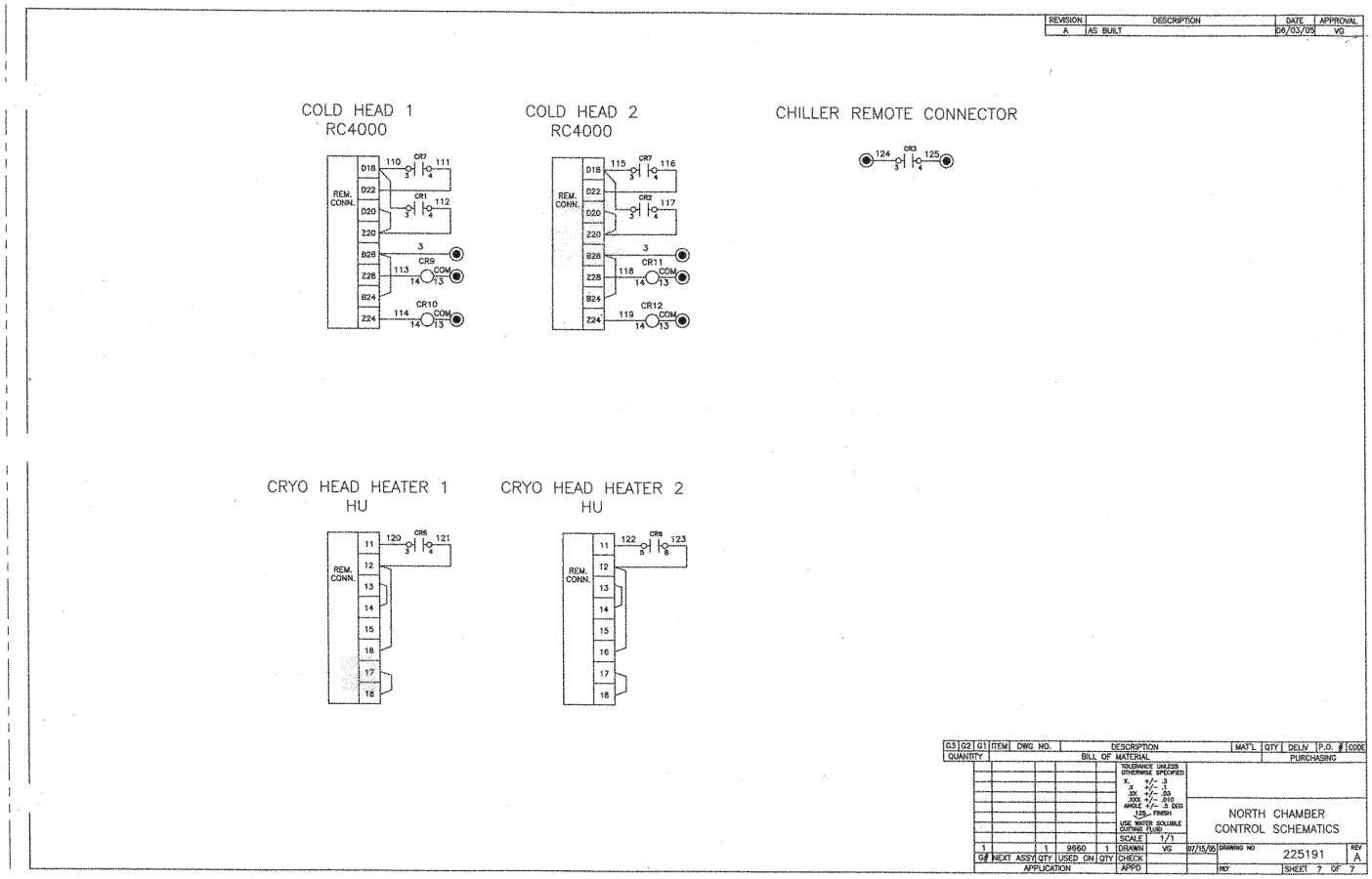
REVISION
DESCRIPTION
DATE
APPROVAL
A
AS BUILT
06/03/05
VG
COLD HEAD 1
RC4000
COLD HEAD 2
RC4000
CHILLER REMOTE CONNECTOR
REM. CONN.
D18
D22
D20
Z20
B28
Z28
B24
Z24
CR7
CR1
CR2
CR3
CR9
CR10
CR11
CR12
COM
CRYO HEAD HEATER 1
HU
CRYO HEAD HEATER 2
HU
CR5
CR6
NORTH CHAMBER
CONTROL SCHEMATICS
225191
A
SHEET 7 OF 7

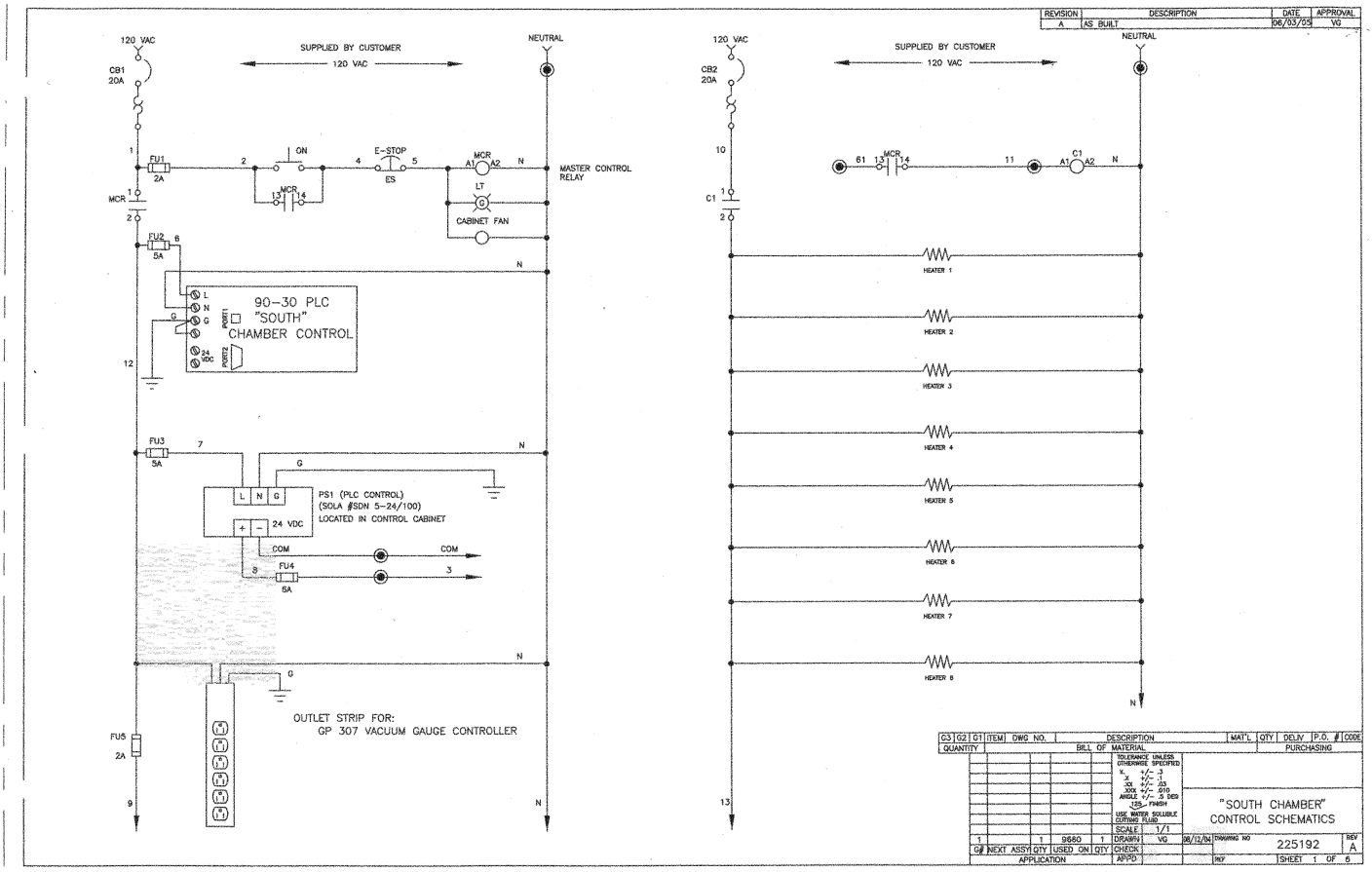
REVISION
DESCRIPTION
DATE
APPROVAL
A
AS BUILT
06/03/05
VG
120 VAC
CB1
20A
SUPPLIED BY CUSTOMER
120 VAC
NEUTRAL
FU1
2A
ON
E-STOP
ES
MCR
A1
A2
N
MASTER CONTROL RELAY
LT
CABINET FAN
FU2
5A
90-30 PLC
"SOUTH"
CHAMBER CONTROL
PORT1
PORT2
24 VDC
FU3
5A
PS1 (PLC CONTROL)
(SOLA #SDN 5-24/100)
LOCATED IN CONTROL CABINET
24 VDC
COM
FU4
6A
OUTLET STRIP FOR:
GP 307 VACUUM GAUGE CONTROLLER
FU5
2A
CB2
20A
C1
HEATER 1
HEATER 2
HEATER 3
HEATER 4
HEATER 5
HEATER 6
HEATER 7
HEATER 8
"SOUTH CHAMBER"
CONTROL SCHEMATICS
225192
A
SHEET 1 OF 6

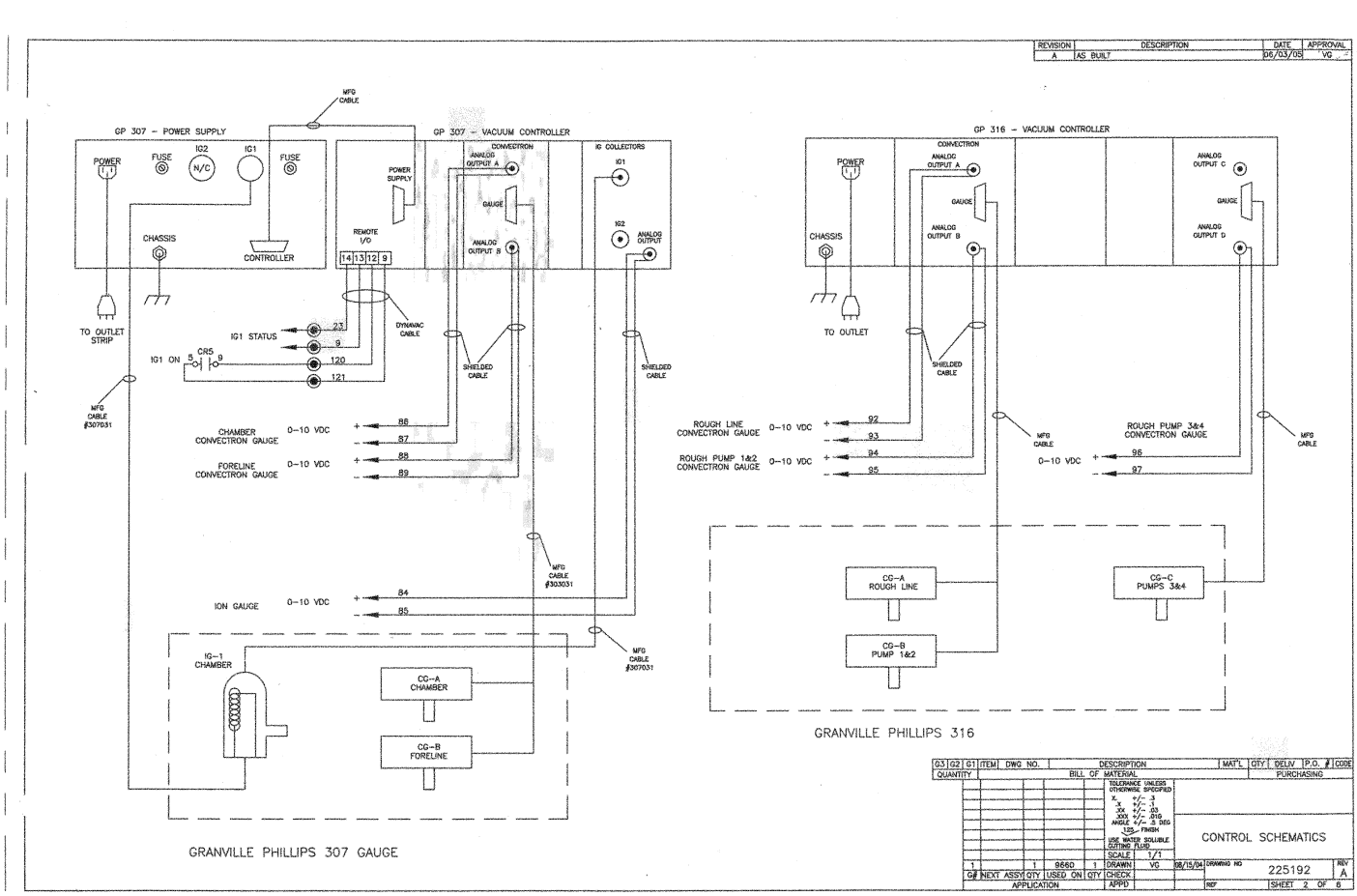
REVISION | DESCRIPTION | DATE | APPROVAL
A | AS BUILT | 06/03/05 | VG
MFG CABLE
GP 307 - POWER SUPPLY
POWER
FUSE
IG2
IG1
N/C
FUSE
CHASSIS
CONTROLLER
TO OUTLET STRIP
MFG CABLE #307031
GP 307 - VACUUM CONTROLLER
CONVECTRON
ANALOG OUTPUT A
POWER SUPPLY
GAUGE
REMOTE I/O
14 13 12 9
ANALOG OUTPUT B
IG COLLECTORS
IG1
IG2
ANALOG OUTPUT
DYNAVAC CABLE
IG1 STATUS
23
9
IG1 ON
5
CR5
9
120
121
SHIELDED CABLE
SHIELDED CABLE
CHAMBER CONVECTRON GAUGE
0-10 VDC
+
-
86
87
FORELINE CONVECTRON GAUGE
0-10 VDC
+
-
88
89
MFG CABLE #303031
ION GAUGE
0-10 VDC
+
-
84
85
MFG CABLE #307031
IG-1 CHAMBER
CG-A CHAMBER
CG-B FORELINE
GRANVILLE PHILLIPS 307 GAUGE
GP 316 - VACUUM CONTROLLER
CONVECTRON
ANALOG OUTPUT A
POWER
GAUGE
ANALOG OUTPUT B
ANALOG OUTPUT C
GAUGE
ANALOG OUTPUT D
CHASSIS
TO OUTLET
SHIELDED CABLE
ROUGH LINE CONVECTRON GAUGE
0-10 VDC
+
-
92
93
ROUGH PUMP 1&2 CONVECTRON GAUGE
0-10 VDC
+
-
94
95
MFG CABLE
ROUGH PUMP 3&4 CONVECTRON GAUGE
0-10 VDC
+
-
96
97
MFG CABLE
CG-A ROUGH LINE
CG-B PUMP 1&2
CG-C PUMPS 3&4
GRANVILLE PHILLIPS 316
G3 G2 G1 ITEM DWG NO. DESCRIPTION MAT'L QTY DELIV P.O. # CODE
QUANTITY BILL OF MATERIAL PURCHASING
TOLERANCE UNLESS OTHERWISE SPECIFIED
X +/- .1
XX +/- .03
XXX +/- .010
ANGLE +/- .5 DEG
125 FINISH
USE WATER SOLUBLE CUTTING FLUID
CONTROL SCHEMATICS
SCALE 1/1
DRAWN VG 08/15/04
CHECK
APPD
DRAWING NO 225192
REV A
SHEET 2 OF 8
G# NEXT ASSY QTY USED ON QTY
1 1 9660 1
APPLICATION

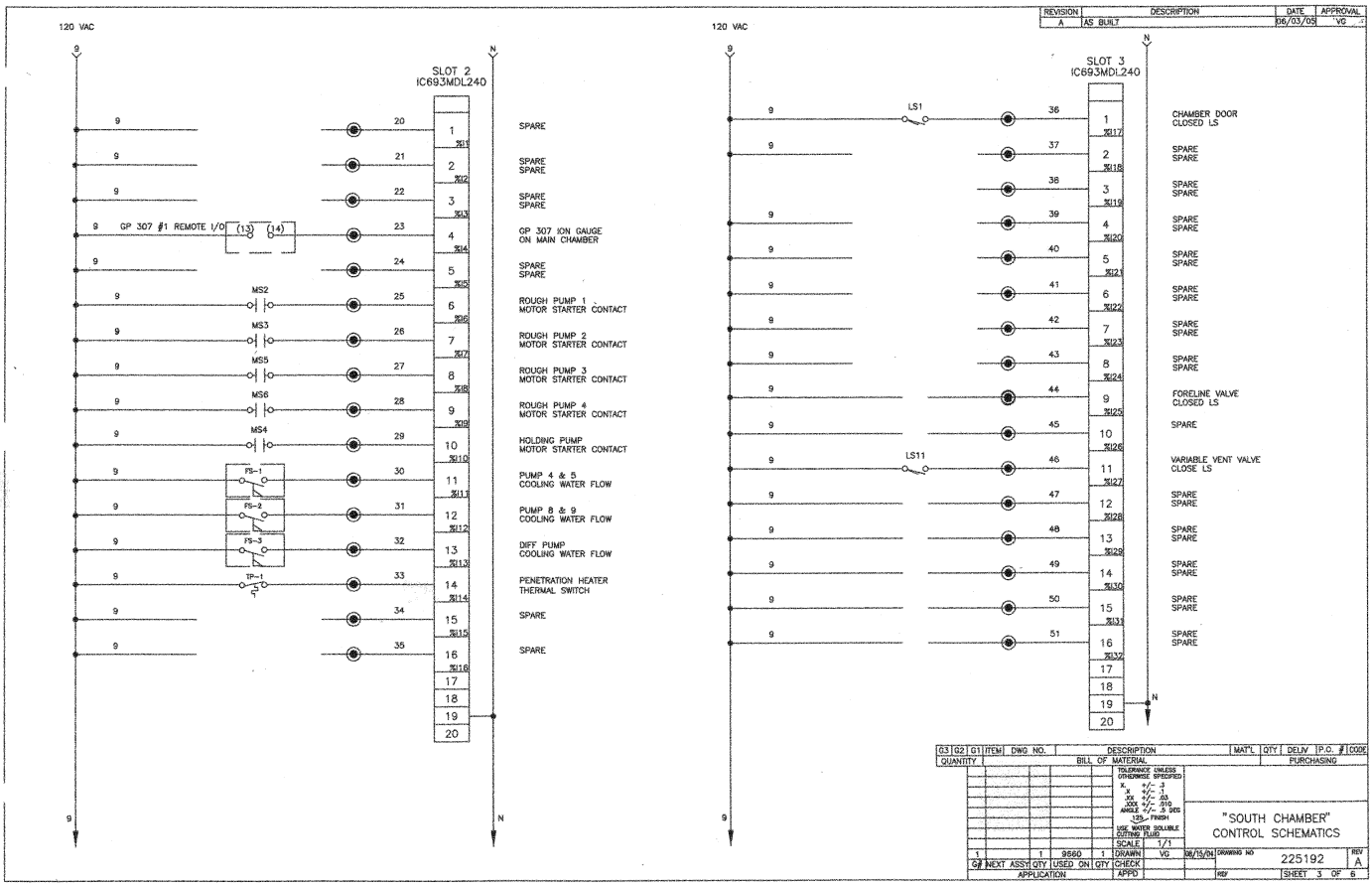
REVISION | DESCRIPTION | DATE | APPROVAL
A | AS BUILT | 06/03/05 | VG
120 VAC
SLOT 2
IC693MDL240
GP 307 #1 REMOTE I/O
MS2
MS3
MS5
MS6
MS4
FS-1
FS-2
FS-3
TP-1
SPARE
SPARE
SPARE
GP 307 ION GAUGE ON MAIN CHAMBER
SPARE
SPARE
ROUGH PUMP 1 MOTOR STARTER CONTACT
ROUGH PUMP 2 MOTOR STARTER CONTACT
ROUGH PUMP 3 MOTOR STARTER CONTACT
ROUGH PUMP 4 MOTOR STARTER CONTACT
HOLDING PUMP MOTOR STARTER CONTACT
PUMP 4 & 5 COOLING WATER FLOW
PUMP 8 & 9 COOLING WATER FLOW
DIFF PUMP COOLING WATER FLOW
PENETRATION HEATER THERMAL SWITCH
SPARE
SPARE
120 VAC
SLOT 3
IC693MDL240
LS1
LS11
CHAMBER DOOR CLOSED LS
SPARE
SPARE
SPARE
SPARE
SPARE
SPARE
SPARE
SPARE
SPARE
SPARE
FORELINE VALVE CLOSED LS
SPARE
VARIABLE VENT VALVE CLOSE LS
SPARE
SPARE
SPARE
SPARE
SPARE
SPARE
SPARE
SPARE
"SOUTH CHAMBER" CONTROL SCHEMATICS
225192
SHEET 3 OF 6

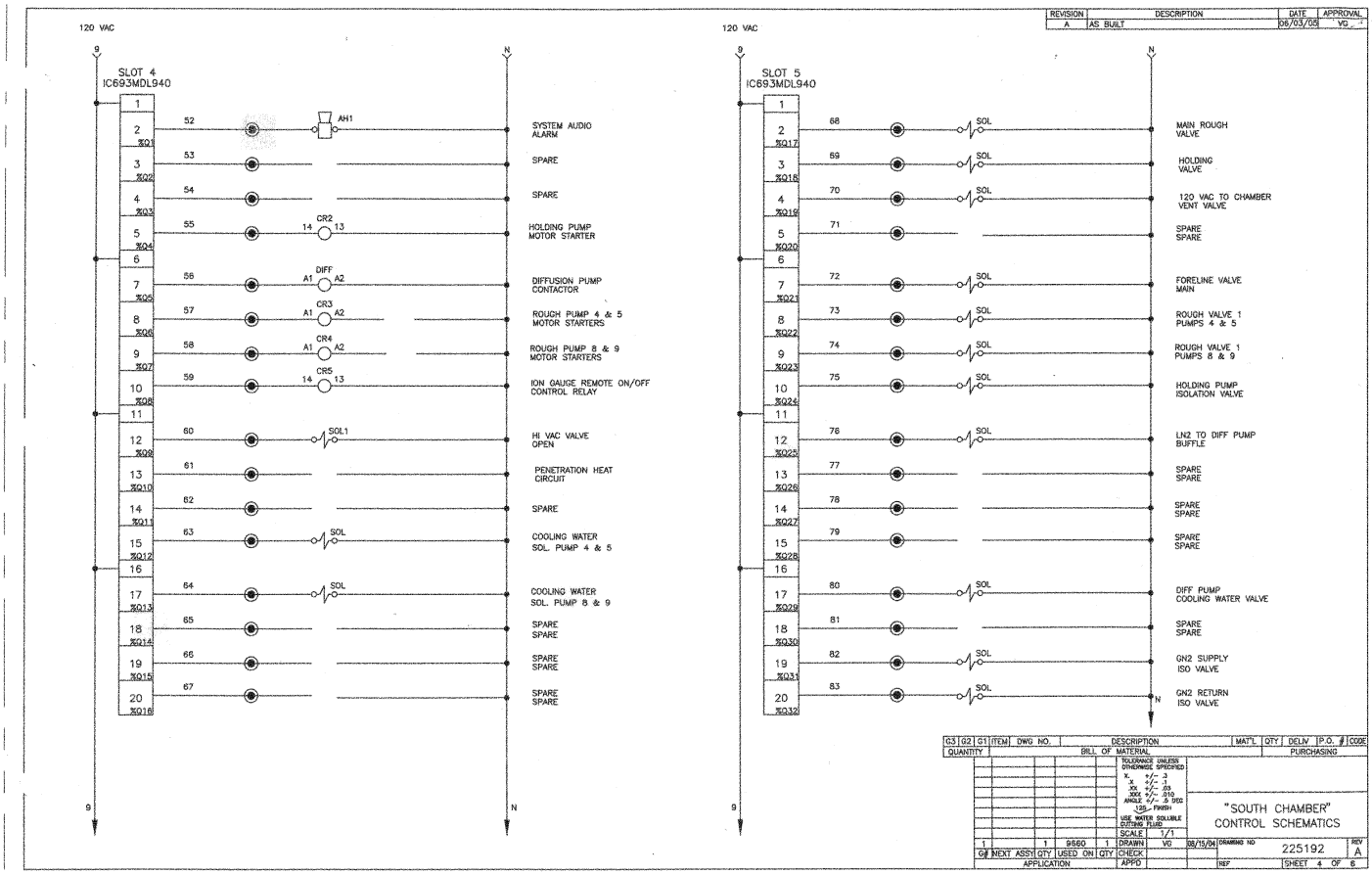
REVISION | DESCRIPTION | DATE | APPROVAL
A | AS BUILT | 06/03/05 | VG
120 VAC
SLOT 4
IC693MDL940
52 AH1 SYSTEM AUDIO ALARM
53 SPARE
54 SPARE
55 CR2 14 13 HOLDING PUMP MOTOR STARTER
56 DIFF A1 A2 DIFFUSION PUMP CONTACTOR
57 CR3 A1 A2 ROUGH PUMP 4 & 5 MOTOR STARTERS
58 CR4 A1 A2 ROUGH PUMP 8 & 9 MOTOR STARTERS
59 CR5 14 13 ION GAUGE REMOTE ON/OFF CONTROL RELAY
60 SOL1 HI VAC VALVE OPEN
61 PENETRATION HEAT CIRCUIT
62 SPARE
63 SOL COOLING WATER SOL. PUMP 4 & 5
64 SOL COOLING WATER SOL. PUMP 8 & 9
65 SPARE SPARE
66 SPARE SPARE
67 SPARE SPARE
120 VAC
SLOT 5
IC693MDL940
68 SOL MAIN ROUGH VALVE
69 SOL HOLDING VALVE
70 SOL 120 VAC TO CHAMBER VENT VALVE
71 SPARE SPARE
72 SOL FORELINE VALVE MAIN
73 SOL ROUGH VALVE 1 PUMPS 4 & 5
74 SOL ROUGH VALVE 1 PUMPS 8 & 9
75 SOL HOLDING PUMP ISOLATION VALVE
76 SOL LN2 TO DIFF PUMP BUFFLE
77 SPARE SPARE
78 SPARE SPARE
79 SPARE SPARE
80 SOL DIFF PUMP COOLING WATER VALVE
81 SPARE SPARE
82 SOL GN2 SUPPLY ISO VALVE
83 SOL GN2 RETURN ISO VALVE
"SOUTH CHAMBER" CONTROL SCHEMATICS
225192
A
SHEET 4 OF 8

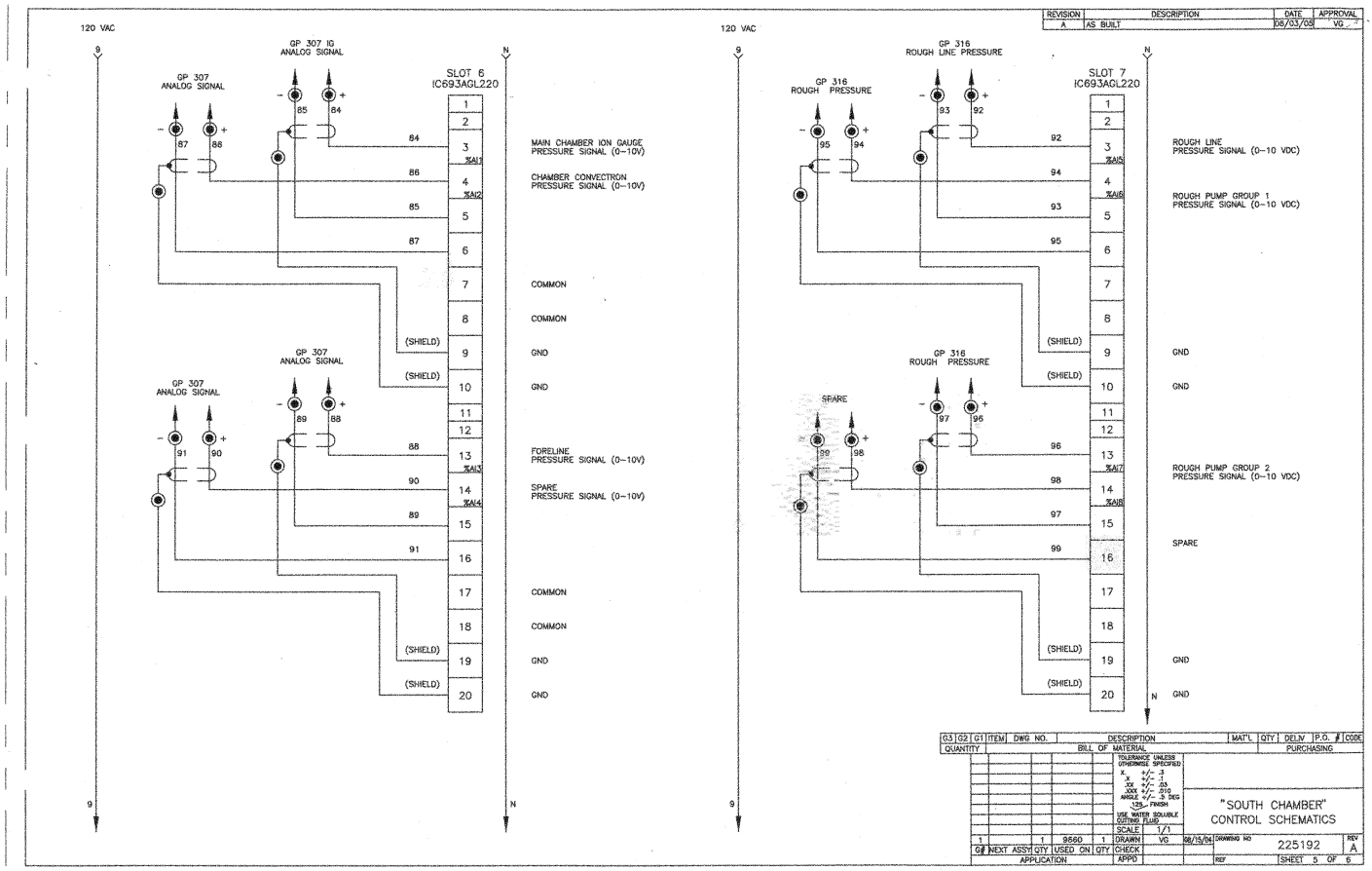
REVISION
DESCRIPTION
DATE
APPROVAL
A
AS BUILT
06/03/05
VG
120 VAC
GP 307 IG ANALOG SIGNAL
GP 307 ANALOG SIGNAL
SLOT 6 IC693AGL220
MAIN CHAMBER ION GAUGE PRESSURE SIGNAL (0-10V)
CHAMBER CONVECTRON PRESSURE SIGNAL (0-10V)
COMMON
GND
FORELINE PRESSURE SIGNAL (0-10V)
SPARE PRESSURE SIGNAL (0-10V)
(SHIELD)
GP 316 ROUGH LINE PRESSURE
GP 316 ROUGH PRESSURE
SLOT 7 IC693AGL220
ROUGH LINE PRESSURE SIGNAL (0-10 VDC)
ROUGH PUMP GROUP 1 PRESSURE SIGNAL (0-10 VDC)
ROUGH PUMP GROUP 2 PRESSURE SIGNAL (0-10 VDC)
SPARE
G3 G2 G1 ITEM DWG NO. DESCRIPTION MAT'L QTY DELIV P.O. # CODE
QUANTITY BILL OF MATERIAL PURCHASING
TOLERANCE UNLESS OTHERWISE SPECIFIED
USE WATER SOLUBLE CUTTING FLUID
"SOUTH CHAMBER" CONTROL SCHEMATICS
SCALE 1/1
DRAWN VG 08/15/04
DRAWING NO 225192
REV A
G# NEXT ASSY QTY USED ON QTY CHECK
APPLICATION APPD
REF
SHEET 5 OF 6

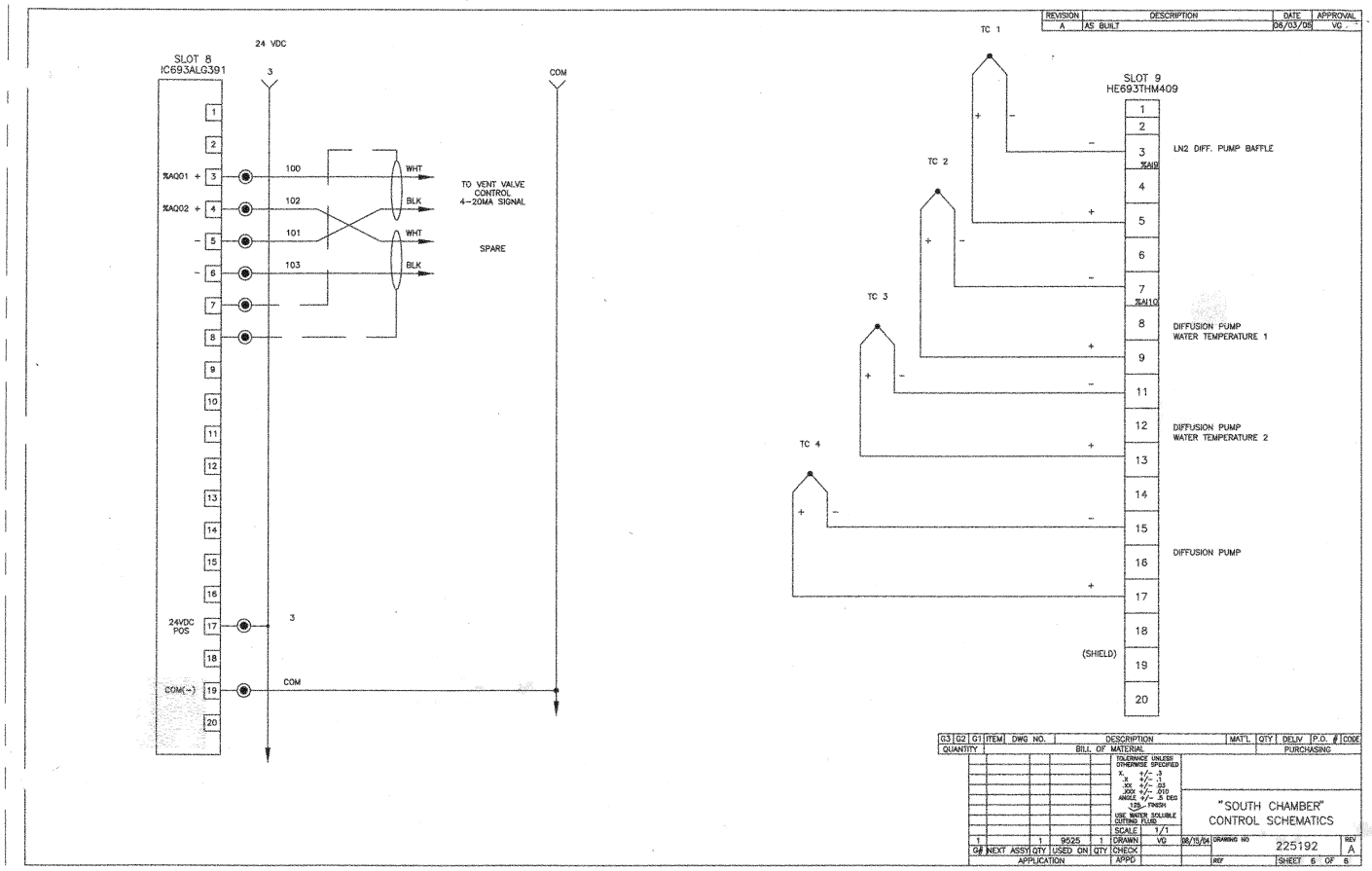
REVISION
A
DESCRIPTION
AS BUILT
DATE
06/03/05
APPROVAL
VG
24 VDC
SLOT 8
IC693ALG391
3
COM
%AQ01 +
%AQ02 +
100
102
101
103
WHT
BLK
WHT
BLK
TO VENT VALVE
CONTROL
4-20MA SIGNAL
SPARE
24VDC
POS
COM(-)
COM
TC 1
TC 2
TC 3
TC 4
SLOT 9
HE693THM409
LN2 DIFF. PUMP BAFFLE
%AI9
%AI10
DIFFUSION PUMP
WATER TEMPERATURE 1
DIFFUSION PUMP
WATER TEMPERATURE 2
DIFFUSION PUMP
(SHIELD)
G3 G2 G1 ITEM DWG NO. DESCRIPTION MAT'L QTY DELIV P.O. # CODE
QUANTITY BILL OF MATERIAL PURCHASING
TOLERANCE UNLESS OTHERWISE SPECIFIED
X. +/- .3
.X +/- .1
.XX +/- .03
.XXX +/- .010
ANGLE +/- .5 DEG
125 FINISH
USE WATER SOLUBLE CUTTING FLUID
SCALE 1/1
DRAWN VG 08/15/04
CHECK
APPD
"SOUTH CHAMBER"
CONTROL SCHEMATICS
DRAWING NO 225192
REV A
SHEET 6 OF 8
G# NEXT ASSY QTY USED ON QTY
1 1 9525 1
APPLICATION
REF

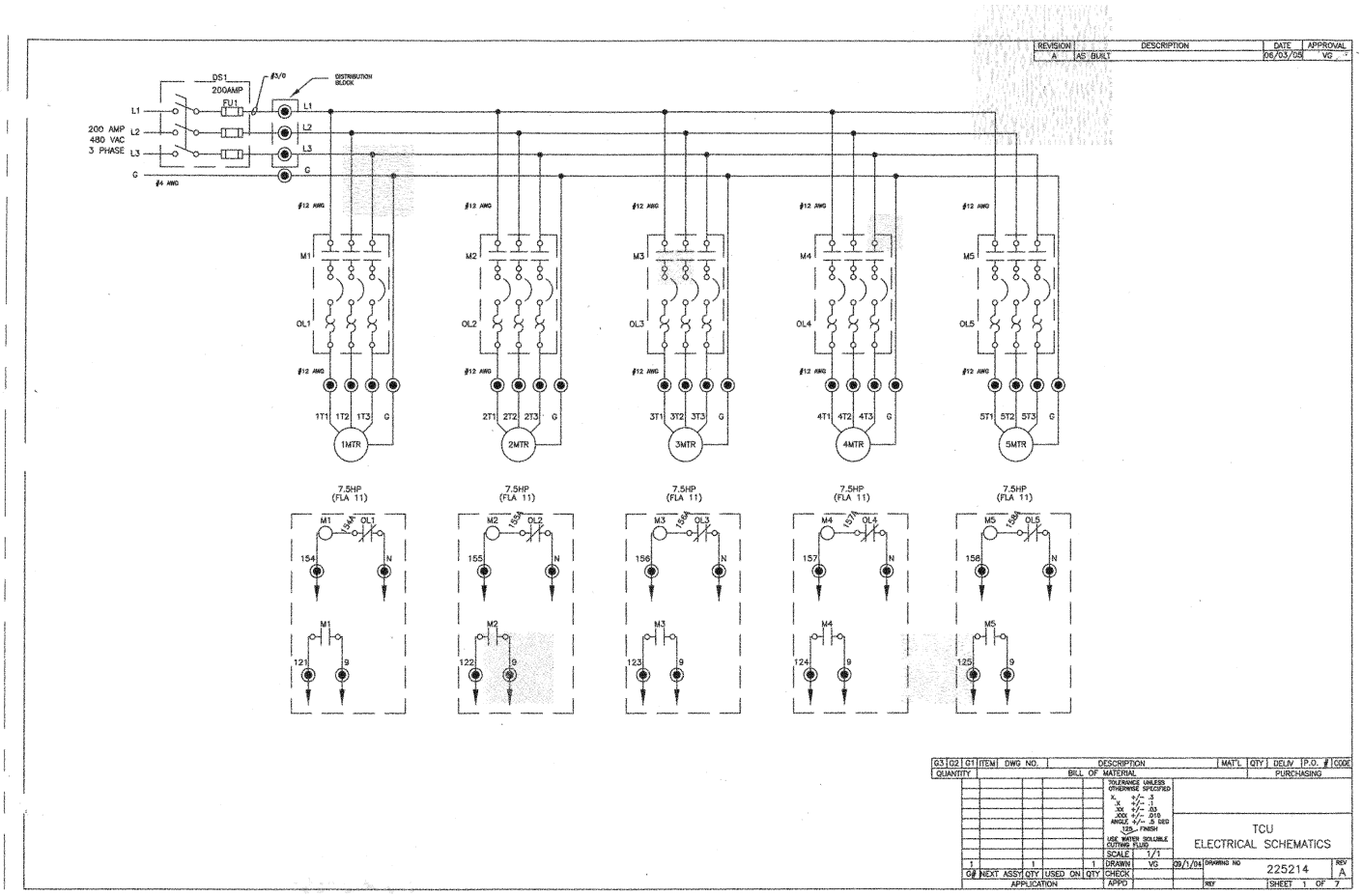
REVISION
DESCRIPTION
DATE
APPROVAL
A
AS BUILT
06/03/05
VG
DS1
200AMP
FU1
#3/0
DISTRIBUTION BLOCK
200 AMP
480 VAC
3 PHASE
L1
L2
L3
G
#4 AWG
#12 AWG
M1
M2
M3
M4
M5
OL1
OL2
OL3
OL4
OL5
1T1 1T2 1T3 G
2T1 2T2 2T3 G
3T1 3T2 3T3 G
4T1 4T2 4T3 G
5T1 5T2 5T3 G
1MTR
2MTR
3MTR
4MTR
5MTR
7.5HP
(FLA 11)
154
155
156
157
158
121
122
123
124
125
N
9
TCU
ELECTRICAL SCHEMATICS
SCALE 1/1
DRAWN VG
09/1/04
DRAWING NO
225214
REV A
SHEET 1 OF 7
BILL OF MATERIAL
PURCHASING

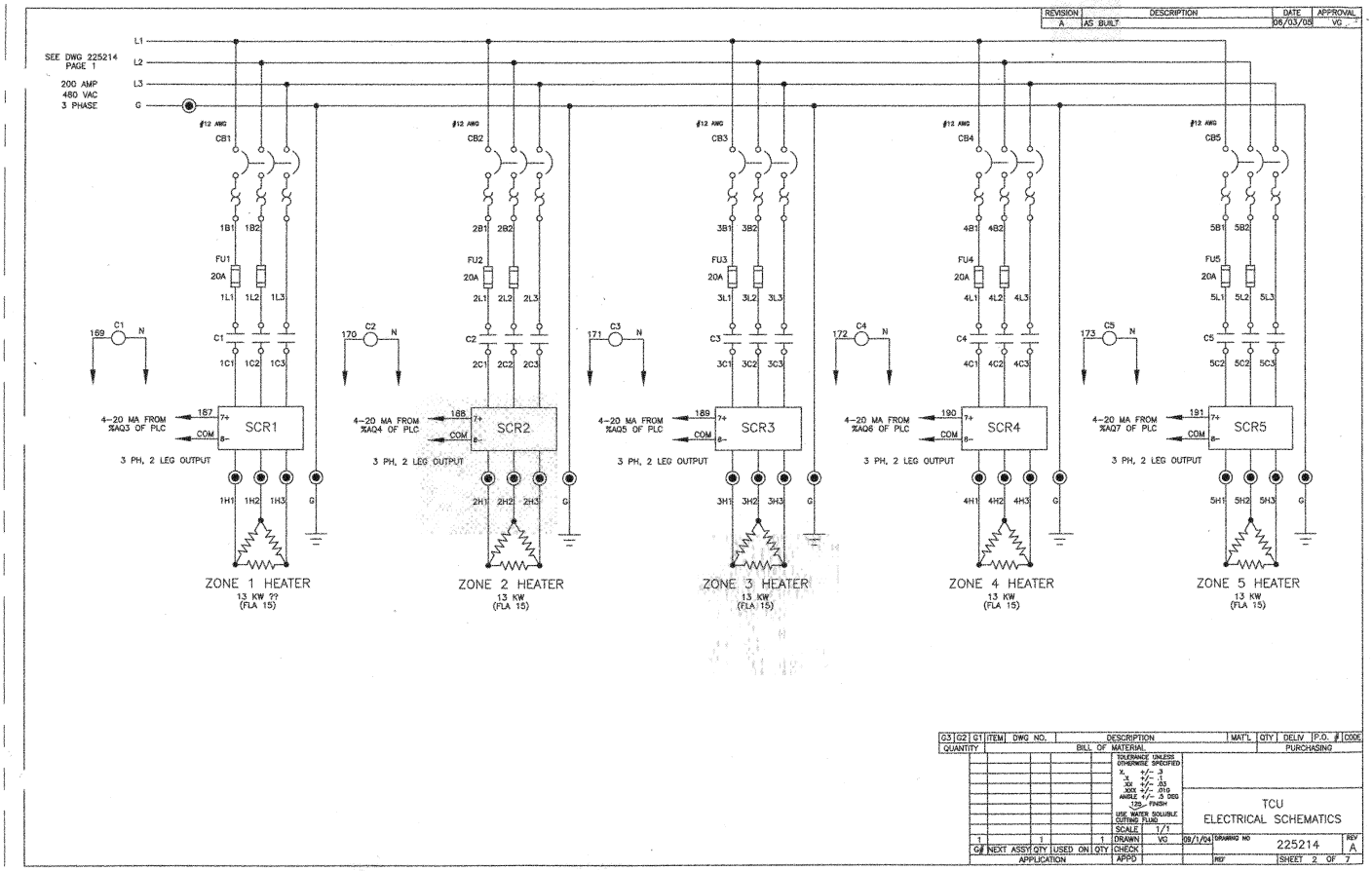
REVISION
A
AS BUILT
DESCRIPTION
DATE
06/03/08
APPROVAL
VG
SEE DWG 225214 PAGE 1
200 AMP 480 VAC 3 PHASE
L1
L2
L3
G
#12 AWG
CB1
CB2
CB3
CB4
CB5
FU1
FU2
FU3
FU4
FU5
20A
C1
C2
C3
C4
C5
169
170
171
172
173
N
4-20 MA FROM %AQ3 OF PLC
4-20 MA FROM %AQ4 OF PLC
4-20 MA FROM %AQ5 OF PLC
4-20 MA FROM %AQ6 OF PLC
4-20 MA FROM %AQ7 OF PLC
187
188
189
190
191
7+
8-
COM
SCR1
SCR2
SCR3
SCR4
SCR5
3 PH, 2 LEG OUTPUT
ZONE 1 HEATER
13 KW ??
(FLA 15)
ZONE 2 HEATER
13 KW
(FLA 15)
ZONE 3 HEATER
13 KW
(FLA 15)
ZONE 4 HEATER
13 KW
(FLA 15)
ZONE 5 HEATER
13 KW
(FLA 15)
BILL OF MATERIAL
QUANTITY
PURCHASING
TCU
ELECTRICAL SCHEMATICS
SCALE 1/1
DRAWN VG
08/1/04
DRAWING NO 225214
REV A
SHEET 2 OF 7
APPLICATION
APPD

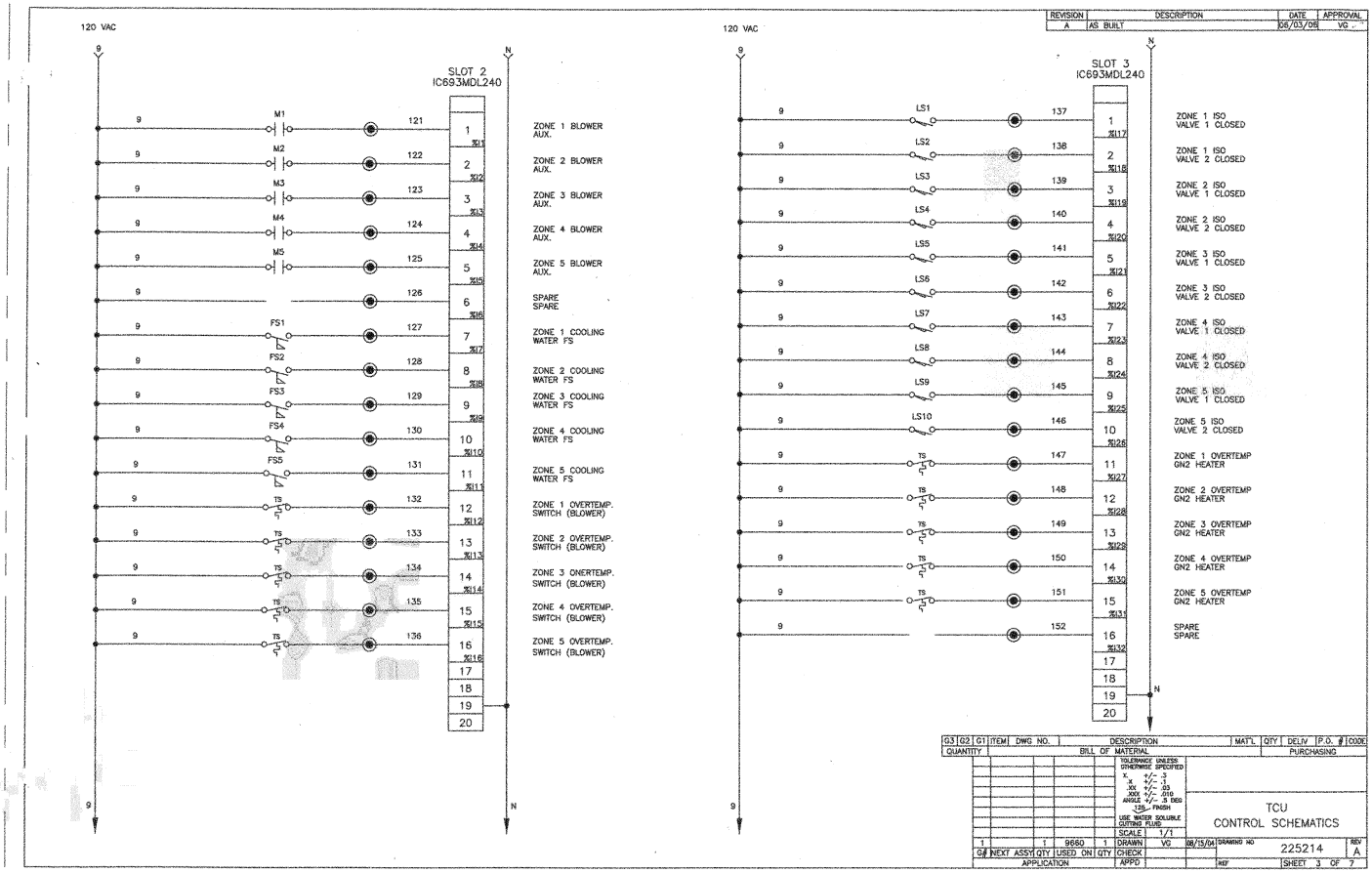
120 VAC
SLOT 2
IC693MDL240
M1
M2
M3
M4
M5
FS1
FS2
FS3
FS4
FS5
TS
ZONE 1 BLOWER AUX.
ZONE 2 BLOWER AUX.
ZONE 3 BLOWER AUX.
ZONE 4 BLOWER AUX.
ZONE 5 BLOWER AUX.
SPARE
SPARE
ZONE 1 COOLING WATER FS
ZONE 2 COOLING WATER FS
ZONE 3 COOLING WATER FS
ZONE 4 COOLING WATER FS
ZONE 5 COOLING WATER FS
ZONE 1 OVERTEMP. SWITCH (BLOWER)
ZONE 2 OVERTEMP. SWITCH (BLOWER)
ZONE 3 OVERTEMP. SWITCH (BLOWER)
ZONE 4 OVERTEMP. SWITCH (BLOWER)
ZONE 5 OVERTEMP. SWITCH (BLOWER)
120 VAC
SLOT 3
IC693MDL240
LS1
LS2
LS3
LS4
LS5
LS6
LS7
LS8
LS9
LS10
ZONE 1 ISO VALVE 1 CLOSED
ZONE 1 ISO VALVE 2 CLOSED
ZONE 2 ISO VALVE 1 CLOSED
ZONE 2 ISO VALVE 2 CLOSED
ZONE 3 ISO VALVE 1 CLOSED
ZONE 3 ISO VALVE 2 CLOSED
ZONE 4 ISO VALVE 1 CLOSED
ZONE 4 ISO VALVE 2 CLOSED
ZONE 5 ISO VALVE 1 CLOSED
ZONE 5 ISO VALVE 2 CLOSED
ZONE 1 OVERTEMP GN2 HEATER
ZONE 2 OVERTEMP GN2 HEATER
ZONE 3 OVERTEMP GN2 HEATER
ZONE 4 OVERTEMP GN2 HEATER
ZONE 5 OVERTEMP GN2 HEATER
SPARE
SPARE
REVISION
DESCRIPTION
DATE
APPROVAL
A
AS BUILT
08/03/05
VG
BILL OF MATERIAL
PURCHASING
TCU
CONTROL SCHEMATICS
225214
A
SHEET 3 OF 7

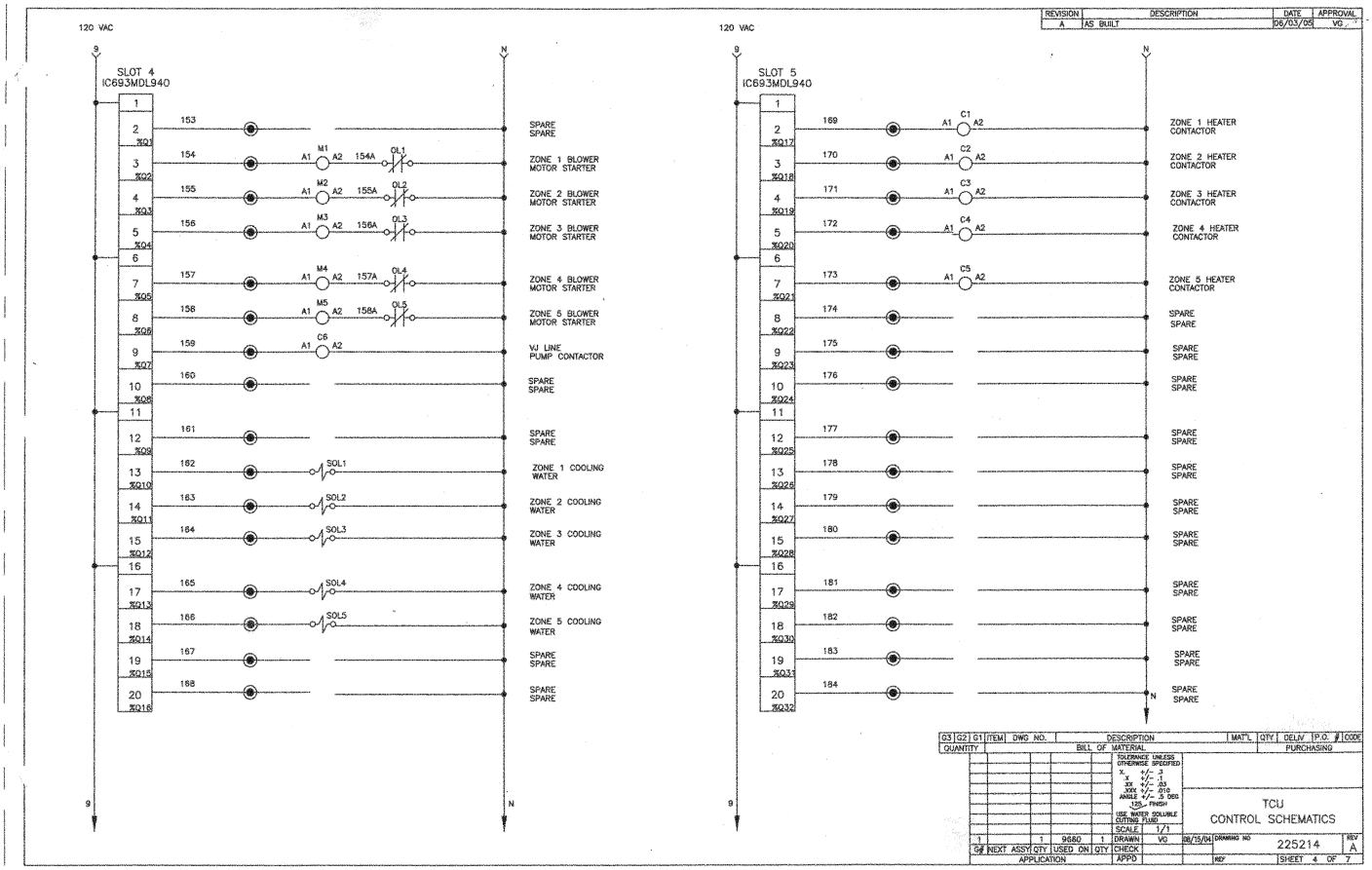
120 VAC
SLOT 4
IC693MDL940
SPARE
ZONE 1 BLOWER MOTOR STARTER
ZONE 2 BLOWER MOTOR STARTER
ZONE 3 BLOWER MOTOR STARTER
ZONE 4 BLOWER MOTOR STARTER
ZONE 5 BLOWER MOTOR STARTER
VJ LINE PUMP CONTACTOR
ZONE 1 COOLING WATER
ZONE 2 COOLING WATER
ZONE 3 COOLING WATER
ZONE 4 COOLING WATER
ZONE 5 COOLING WATER
120 VAC
SLOT 5
IC693MDL940
ZONE 1 HEATER CONTACTOR
ZONE 2 HEATER CONTACTOR
ZONE 3 HEATER CONTACTOR
ZONE 4 HEATER CONTACTOR
ZONE 5 HEATER CONTACTOR
REVISION
DESCRIPTION
DATE
APPROVAL
AS BUILT
08/03/05
VG
BILL OF MATERIAL
PURCHASING
TCU
CONTROL SCHEMATICS
225214
SHEET 4 OF 7

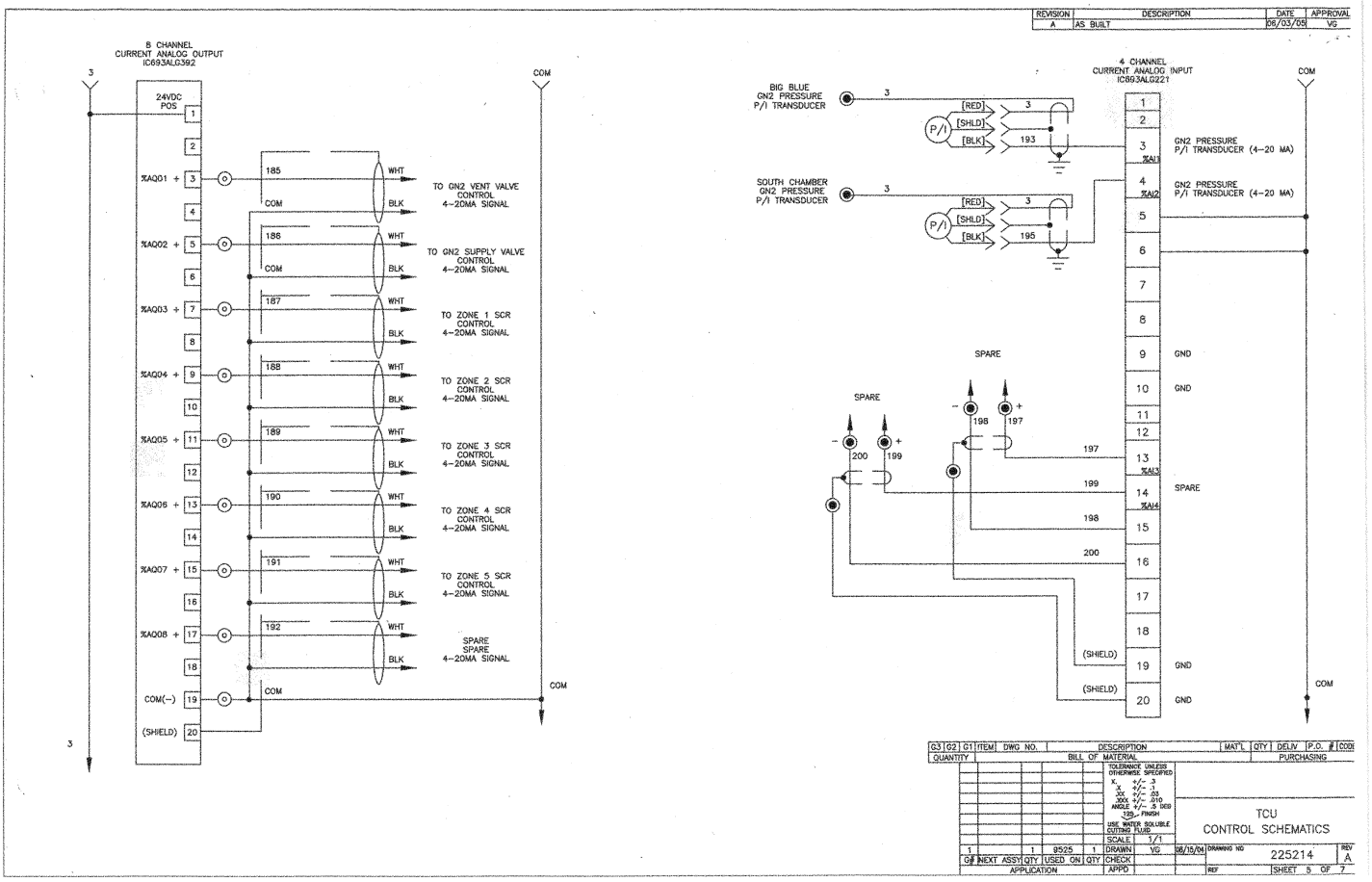
8 CHANNEL
CURRENT ANALOG OUTPUT
IC693ALG392
24VDC POS
%AQ01 +
%AQ02 +
%AQ03 +
%AQ04 +
%AQ05 +
%AQ06 +
%AQ07 +
%AQ08 +
COM(-)
(SHIELD)
TO GN2 VENT VALVE CONTROL 4-20MA SIGNAL
TO GN2 SUPPLY VALVE CONTROL 4-20MA SIGNAL
TO ZONE 1 SCR CONTROL 4-20MA SIGNAL
TO ZONE 2 SCR CONTROL 4-20MA SIGNAL
TO ZONE 3 SCR CONTROL 4-20MA SIGNAL
TO ZONE 4 SCR CONTROL 4-20MA SIGNAL
TO ZONE 5 SCR CONTROL 4-20MA SIGNAL
SPARE SPARE 4-20MA SIGNAL
4 CHANNEL
CURRENT ANALOG INPUT
IC693ALG221
BIG BLUE GN2 PRESSURE P/I TRANSDUCER
SOUTH CHAMBER GN2 PRESSURE P/I TRANSDUCER
GN2 PRESSURE P/I TRANSDUCER (4-20 MA)
SPARE
GND
TCU
CONTROL SCHEMATICS
225214
SHEET 5 OF 7

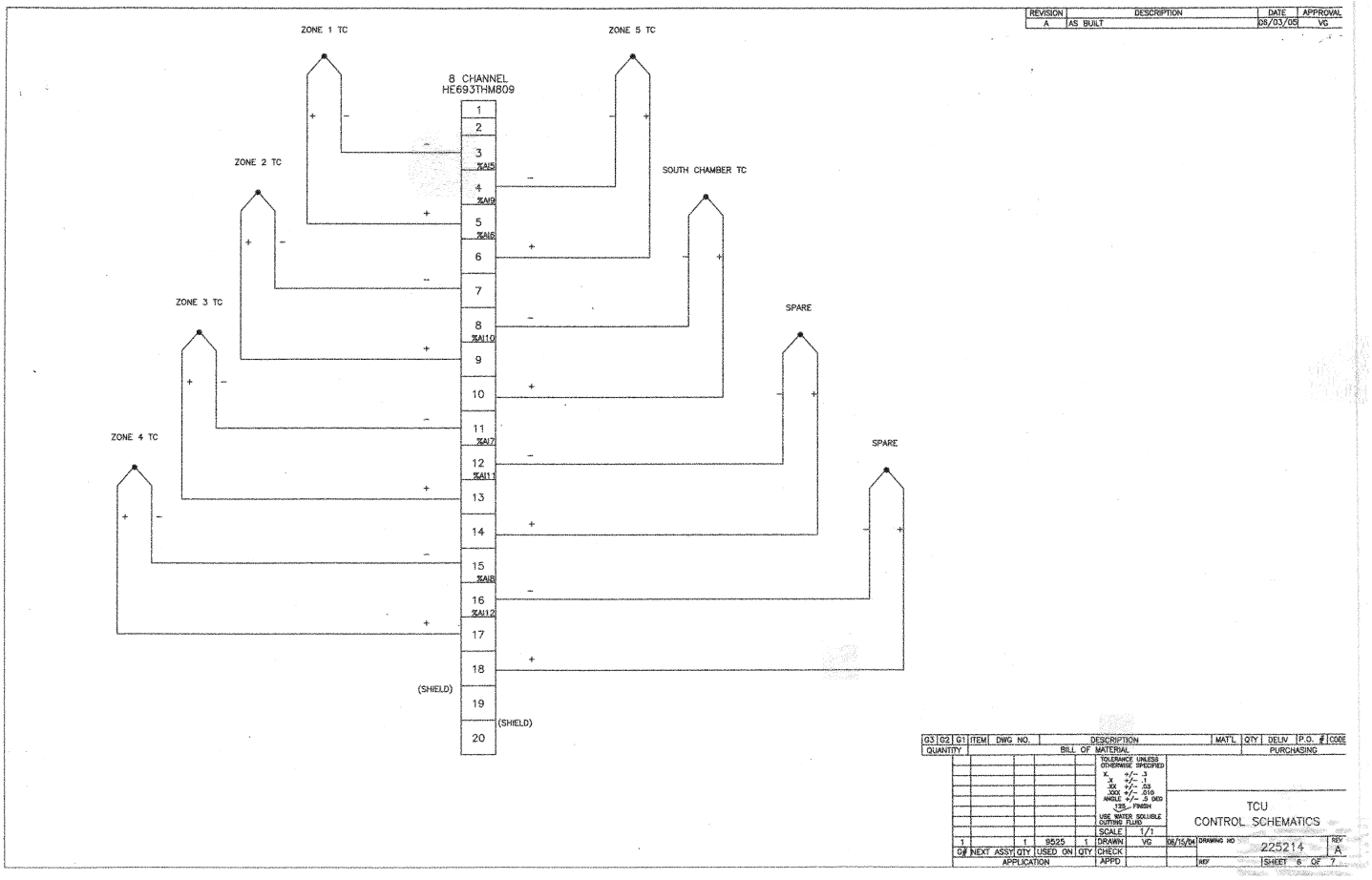
REVISION
DESCRIPTION
DATE
APPROVAL
A
AS BUILT
08/03/05
VG
ZONE 1 TC
ZONE 5 TC
8 CHANNEL
HE693THM809
ZONE 2 TC
SOUTH CHAMBER TC
ZONE 3 TC
SPARE
ZONE 4 TC
SPARE
(SHIELD)
(SHIELD)
TCU
CONTROL SCHEMATICS
225214
A
SHEET 6 OF 7

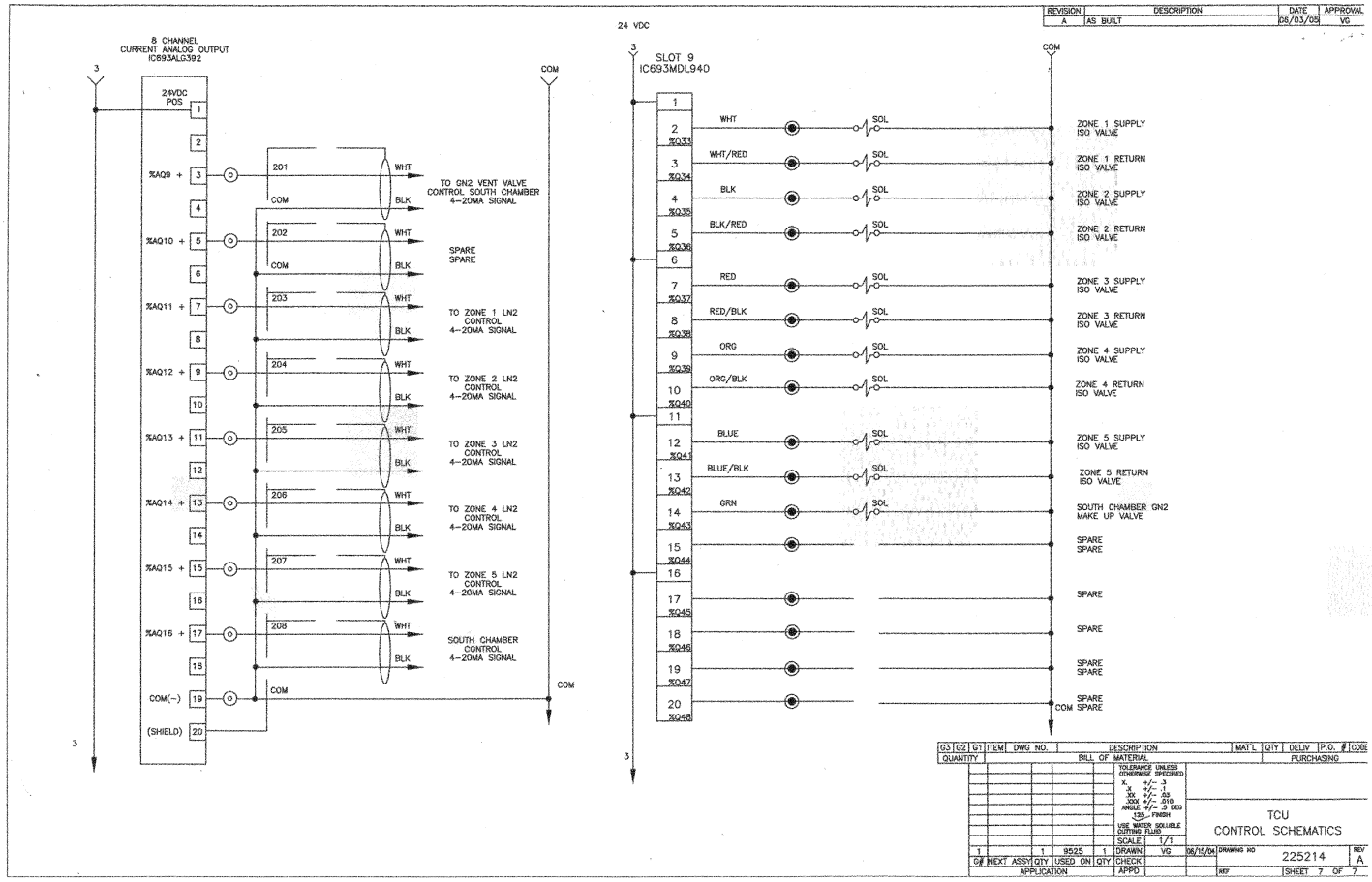
REVISION | DESCRIPTION | DATE | APPROVAL
A | AS BUILT | 06/03/05 | VG
8 CHANNEL
CURRENT ANALOG OUTPUT
IC693ALG392
24VDC POS
%AQ9 +
%AQ10 +
%AQ11 +
%AQ12 +
%AQ13 +
%AQ14 +
%AQ15 +
%AQ16 +
COM(-)
(SHIELD)
201
202
203
204
205
206
207
208
COM
WHT
BLK
TO GN2 VENT VALVE CONTROL SOUTH CHAMBER 4-20MA SIGNAL
SPARE
SPARE
TO ZONE 1 LN2 CONTROL 4-20MA SIGNAL
TO ZONE 2 LN2 CONTROL 4-20MA SIGNAL
TO ZONE 3 LN2 CONTROL 4-20MA SIGNAL
TO ZONE 4 LN2 CONTROL 4-20MA SIGNAL
TO ZONE 5 LN2 CONTROL 4-20MA SIGNAL
SOUTH CHAMBER CONTROL 4-20MA SIGNAL
24 VDC
SLOT 9
IC693MDL940
%Q33
%Q34
%Q35
%Q36
%Q37
%Q38
%Q39
%Q40
%Q41
%Q42
%Q43
%Q44
%Q45
%Q46
%Q47
%Q48
WHT
WHT/RED
BLK
BLK/RED
RED
RED/BLK
ORG
ORG/BLK
BLUE
BLUE/BLK
GRN
SOL
ZONE 1 SUPPLY ISO VALVE
ZONE 1 RETURN ISO VALVE
ZONE 2 SUPPLY ISO VALVE
ZONE 2 RETURN ISO VALVE
ZONE 3 SUPPLY ISO VALVE
ZONE 3 RETURN ISO VALVE
ZONE 4 SUPPLY ISO VALVE
ZONE 4 RETURN ISO VALVE
ZONE 5 SUPPLY ISO VALVE
ZONE 5 RETURN ISO VALVE
SOUTH CHAMBER GN2 MAKE UP VALVE
SPARE
SPARE
SPARE
SPARE
SPARE
SPARE
COM SPARE
TCU
CONTROL SCHEMATICS
225214
A
SHEET 7 OF 7

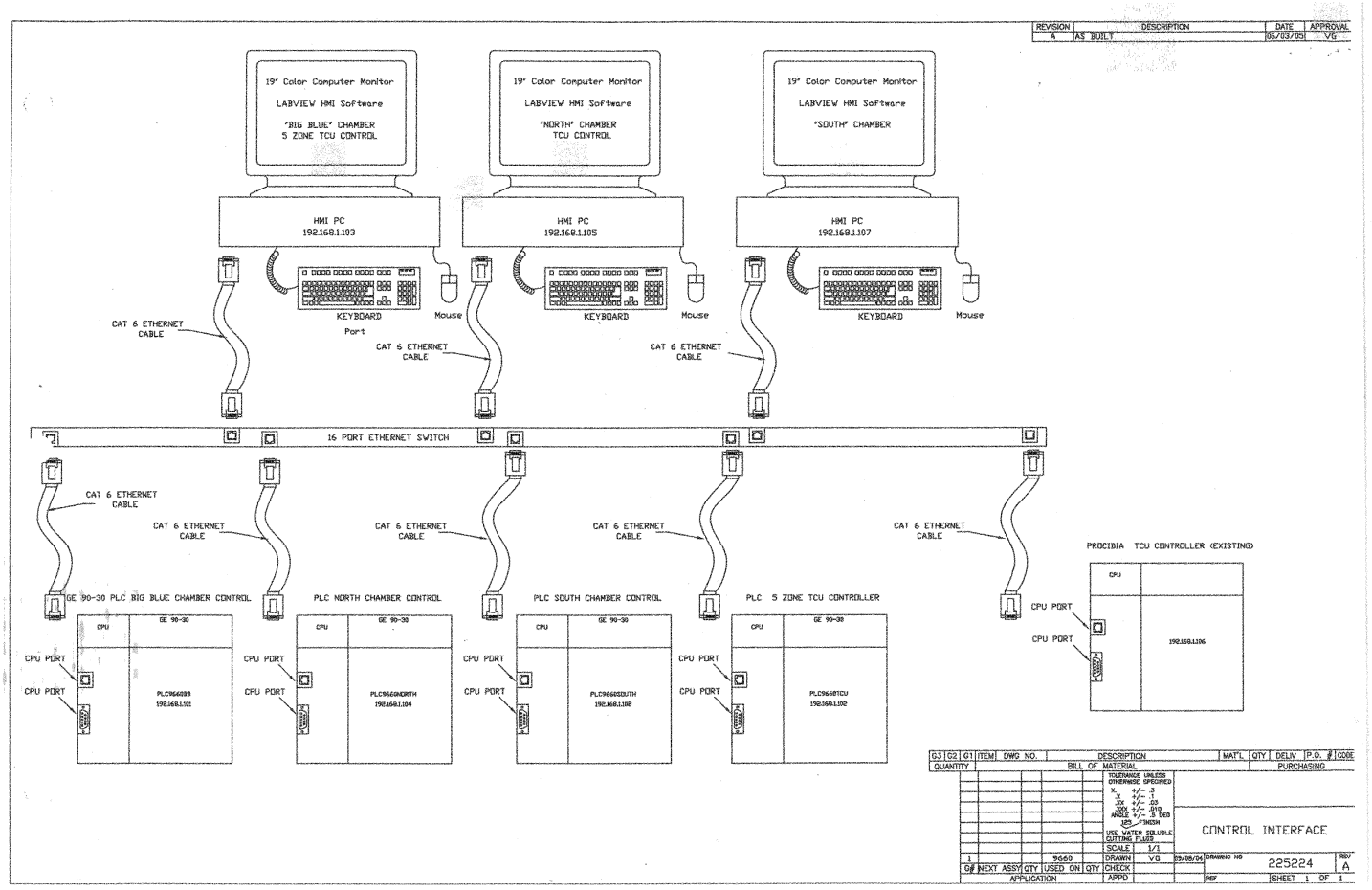
REVISION
DESCRIPTION
DATE
APPROVAL
A
AS BUILT
06/03/05
VG
19" Color Computer Monitor
LABVIEW HMI Software
"BIG BLUE" CHAMBER
5 ZONE TCU CONTROL
19" Color Computer Monitor
LABVIEW HMI Software
"NORTH" CHAMBER
TCU CONTROL
19" Color Computer Monitor
LABVIEW HMI Software
"SOUTH" CHAMBER
HMI PC
192.168.1.103
HMI PC
192.168.1.105
HMI PC
192.168.1.107
KEYBOARD
Port
Mouse
KEYBOARD
Mouse
KEYBOARD
Mouse
CAT 6 ETHERNET CABLE
CAT 6 ETHERNET CABLE
CAT 6 ETHERNET CABLE
16 PORT ETHERNET SWITCH
CAT 6 ETHERNET CABLE
CAT 6 ETHERNET CABLE
CAT 6 ETHERNET CABLE
CAT 6 ETHERNET CABLE
CAT 6 ETHERNET CABLE
GE 90-30 PLC BIG BLUE CHAMBER CONTROL
PLC NORTH CHAMBER CONTROL
PLC SOUTH CHAMBER CONTROL
PLC 5 ZONE TCU CONTROLLER
PROCIDIA TCU CONTROLLER (EXISTING)
CPU
GE 90-30
CPU PORT
CPU PORT
PLC9660BB
192.168.1.101
PLC9660NORTH
192.168.1.104
PLC9660SOUTH
192.168.1.108
PLC9660TCU
192.168.1.102
192.168.1.106
G3 G2 G1 ITEM DWG NO. DESCRIPTION MAT'L QTY DELIV P.O. # CODE
QUANTITY
BILL OF MATERIAL
PURCHASING
TOLERANCE UNLESS OTHERWISE SPECIFIED
X +/- .3
.X +/- .1
.XX +/- .03
.XXX +/- .010
ANGLE +/- .5 DEG
125 FINISH
USE WATER SOLUBLE CUTTING FLUID
CONTROL INTERFACE
SCALE 1/1
1
9660
DRAWN VG 09/08/04
DRAWING NO 225224
REV A
G# NEXT ASSY QTY USED ON QTY
CHECK
APPLICATION
APPD
REF
SHEET 1 OF 1

REVISION	DESCRIPTION	DATE	APPROVAL

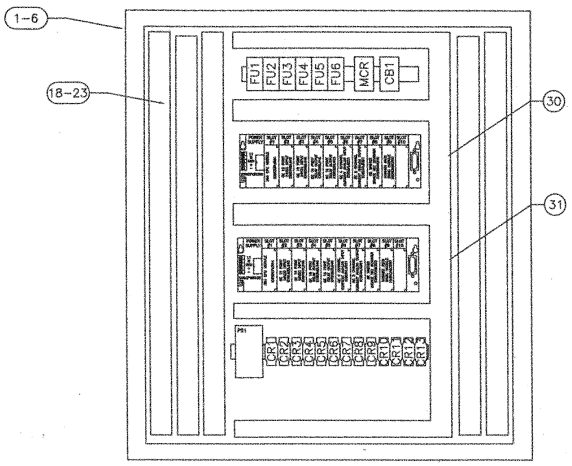

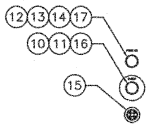

TO BE MOUNTED ON ENCLOSURE DOOR.

G3	G2	G1	ITEM	DWG NO.	DESCRIPTION	MAT'L	QTY	DELIV	P.O. #	COD
			1	31	325218 TCU PLC DRAWING					
			1	30	325215 BIG BLUE PLC DRAWING					
			15	29	CR1-13 IDEC SOCKET FOR SPDS RELAY SH1B-05					
			15	28	CR1-13 IDEC RELAY RH1B-UL, 120VAC					
			1	27	CB1 AB LOCKOT ATTACHMENT 1492-ACBLOA					
			1	26	CB1 AB 1 POLE CIRCUIT BREAKER 1492-CB1F200					
			2	25	MCR,C1 RC CIRCUIT FOR NOISE REDUCTION #LAD4RCU					
			2	24	MCR,C1 3 POLE, NON-REVERSING CONTACTOR LC1D1267					
			4	23	WAGO END STOP, 6 MM, GREY 249-116					
			10	22	WAGO GROUND TERMINAL BLOCK, 280-687					
			1PK	21	WAGO BLANK MARKERS, 209-501					
			20	20	WAGO ADJACENT JUMPER 280-402					
			200	19	WAGO TERMINAL BLOCK, 3 COND. GREY 280-681					
			1	18	AB , RAIL, DIN, RAISED 1492-DR6					
			1	17	AB LEGEND PLATE, "POWER ON", #800E-35AE178					
			1	16	AB LEGEND PLATE, "ESTOP", #800E-15YE112					
			1	15	FLOYD BELL AUDIBLE ALARM # XC-V09-330-Q					
			1	14	AB; POWER MODULE, #800E-3DL3					
			2	13	AB CONTACT, NO, #800E-3X10					
			1	12	AB MOMENTARY OPERATOR, GREEN ILLUM MODEL #800EP-LF3					
			1	11	AB; CONTACT BLK, NCLB, #800E-2LX01L					
			1	10	AB PUSH-PULL OPERATOR, RED MUSHROOM, #800EP-MTS44					
			1	9	PS1 SOLA; POWER SUPPLY, 24VDC, 5 AMPS #SDN 5-24-100P					
			6	8	FU1-6 BUSSMAN, CLASS J FUSEHOLDER, 30A MODEL #JT60030					
			4	7	FU1-4 BUSSMAN TIME-DELAY, CLASS J FUSE 5AMP, #LPJ-5SP					
			1	6	AB; DOOR HARDWARE KIT, RIGHT HAND BOTTOM ROLLER, #1494V-L2					
			1	5	AB; DOOR HARDWARE KIT, RIGHT HAND TOP & SIDE ROLLERS, #1494V-L1					
			1	4	FAN, 120 VAC, 4' DIA NEWARK #90F6921					
			2	3	HOFFMAN; LOUVER, 4.75 X 4.5" #A-VK34					
			1	2	HOFFMAN; PANEL FOR 42X38", #A-42P38					
			1	1	HOFFMAN TYPE 12 ENCL., 36 X 30 X 10" #A-425A3810LP					

QUANTITY — BILL OF MATERIAL — PURCHASING

G#	NEXT ASSY	QTY	USED ON	QTY
	1		1	1

APPLICATION

TOLERANCE UNLESS OTHERWISE SPECIFIED
X. +/- .3
.X +/- .1
.XX +/- .03
.XXX +/- .010
ANGLE +/- .5 DEG
125 FINISH
USE WATER SOLUBLE CUTTING FLUID
SCALE 1:4

DRAWN	VG	08-06-04
CHECK		
APP'D		

BIG BLUE
CONTROL CABINET

DRAWING NO 425219 — REV —
REF — SHEET 1 OF 1

REVISION	DESCRIPTION	DATE	APPROVAL

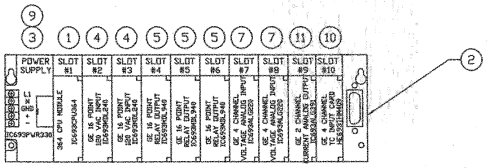

LOCATED IN CONTROL CABINET

G3	G2	G1	ITEM	DWG NO.	DESCRIPTION	MAT'L	QTY	DELIV	P.O. #	COD
		1	11		GE CURRENT OUTPUT MODULE 2 CHANNEL GE SUPPLY #IC693ALG391					
		1	10		GE 4 CHANNEL TC INPUT MODULE GE SUPPLY # HE693THM409					
		1	9		GE MINI CONVERTER HE 693SNPCBL\SNP TO RS 232 ADAPTER					
		2	8		GE FILLER MODULE GE SUPPLY # IC693ACC310					
		2	7		GE VOLTAGE INPUT MODULE 4 CHANNEL GE SUPPLY # IC693ALG220					
			6							
		3	5		GE RELAY OUTPUT MODULE 16 POINTS GE SUPPLY # IC693MDL940					
		2	4		GE 120 VAC INPUT MODULE 16 POINTS GE SUPPLY # IC693MDL240					
		1	3		GE POWER SUPPLY 120/240 VAC GE SUPPLY # IC693PWR330					
		1	2		GE BASE USE WITH CPU 364 GE SUPPLY # IC693CHS391					
		1	1		GE CPU 364 MODULE GE SUPPLY # IC693CPU364					

QUANTITY — BILL OF MATERIAL — PURCHASING

NOTES:
1. REFER TO CONTROL SCHEMATIC DRAWING FOR WIRING.

TOLERANCE UNLESS OTHERWISE SPECIFIED
X +/- .3
.X +/- .1
.XX +/- .03
.XXX +/- .010
ANGLE +/- .5 DEG
125 FINISH
USE WATER SOLUBLE CUTTING FLUID

"BIG BLUE"
PLC ASSEMBLY

G#	NEXT ASSY	QTY	USED ON	QTY	SCALE	NONE			
1		1	9660	1	DRAWN	VG	08/15/04	DRAWING NO 325215	REV –
APPLICATION					CHECK			REF	SHEET 1 OF 1
					APPD				

REVISION	DESCRIPTION	DATE	APPROVAL

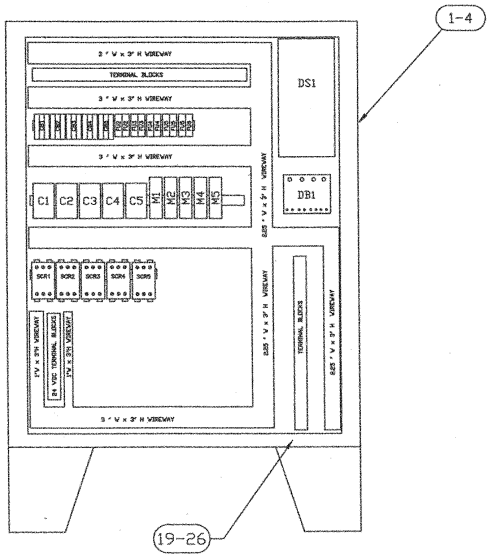

	1	28	SCR1-5	HOFFMANN LOUVER KIT, A-VX66						
	5	27	SCR1-5	WATLOW DIN-A-MITE SCR, 40A 2LEG VARIFREQ.BURST, DC25-60FB-000						
	1PK	26		WAGO BLANK MARKERS, #209-501						
	100	25		WAGO TERMINAL BLOCK, 2 COND, GREY #280-901						
	10	24		WAGO ADJACENT JUMPER #280-402						
	20	23		WAGO GROUND TERMINAL BLOCK #280-907						
	2	22		2 1/4" x 3" x 6' Wire Duct (Gray w/Cover) Ibeco TI-2230G						
	2	21		1 1/2" x 3" x 6' Wire Duct (Gray w/Cover) Ibeco TI-2330G						
	2	20		3" x 3" x 6' Wire Duct (Gray w/Cover) Ibeco TI-3320G						
	2	19		Raised Din Rail Allen Bradley 1492R-DR6						
	5	18	CR1-5	Din Rail Snap Mount Sockets Idec® SH2B-05						
	5	17	CR1-5	Gen Purp Midget Relays 10 Contact Rating, Idec® RH2B-UL-120 VAC						
	10	16	FU6-FU6	FUSE HOLDER, WATLOW PART NUMBER 17-5110						
	10	15	FU6-FU6	BUSSMANN FUSE, HIGH SPEED, 20A NFWC-20A10F						
	3	14	DB1	Safety Covers Gould Shawmut 08578						
	5	13	CB1-5	AB 3 POLE CIRCUIT BREAKER 1492-CB3F200						
	1	12	DB1	Power Distribution Blocks 3 Pole Gould Shawmut 66653						
	5	11	C1-C5	AUXILIARY CONTACT FOR MOTOR STARTER #LUFN20						
	5	10	M1-M5	SQUARE D CONTROL UNITS #LUCA10TU						
	5	9	C1-C5	RC CIRCUIT FOR NOISE REDUCTION #LA34921U						
	5	8	M1-M5	INTEGRAL SELF PROTECTED STARTER @ LUB32						
	5	7	C1-C5	3 POLE, NON-REVERSING CONTACTOR LC1D18G7						
	3	6	FU2,FU3	CLASS J FUSE, QUICK ACTING JKS-200						
	1	5		HOFFMAN ADAPTER FOR SQUARE D DISCONNECT A-21SDA						
	1	4		HOFFMAN BLANK ADAPTER PLATE A-21BAP						
	1	3	DS1	SQUARE D DISCONNECT SWITCH, 200A W/FUSE CLIPS&HANDLE @ 9422-ATF12						
	1	2		HOFFMAN PANEL, 60 x 49 INCH @ A-60P48						
	1	1		HOFFMAN FLANGE MOUNTED DISC ENCL 60 x 49 x 12 INCH @ A-60X49X12LPFTC						

G3	G2	G1	ITEM	DWG NO.	DESCRIPTION	MAT'L	QTY	DELIV	P.O. #	CODE
QUANTITY					BILL OF MATERIAL			PURCHASING		

NOTES: 1) THE POWER CABINET IS A SINGLE DOOR ENCLOSURE
60.00" H x 49" W x 12.00" D
PANEL SIZE IS 56.00" H x 44.00" W
2) MOUNT LOUVER KITS ON THE OUT MOST CORNERS OF THE ENCLOSURE FRONT DOORS
3) SEPARATE 24 VDC WIRING FROM 480 VAC

TOLERANCE UNLESS OTHERWISE SPECIFIED
X. +/- .3
.X +/- .1
.XX +/- .03
.XXX +/- .010
ANGLE +/- .5 DEG
125 FINISH
USE WATER SOLUBLE CUTTING FLUID

SCR CABINET ASSEMBLY

						SCALE	1:4				
1		1	9660	1	DRAWN	VG	07/17/04	DRAWING NO	425220	REV	–
G#	NEXT ASSY	QTY	USED ON	QTY	CHECK						
APPLICATION					APPD			REF		SHEET 1 OF 1	

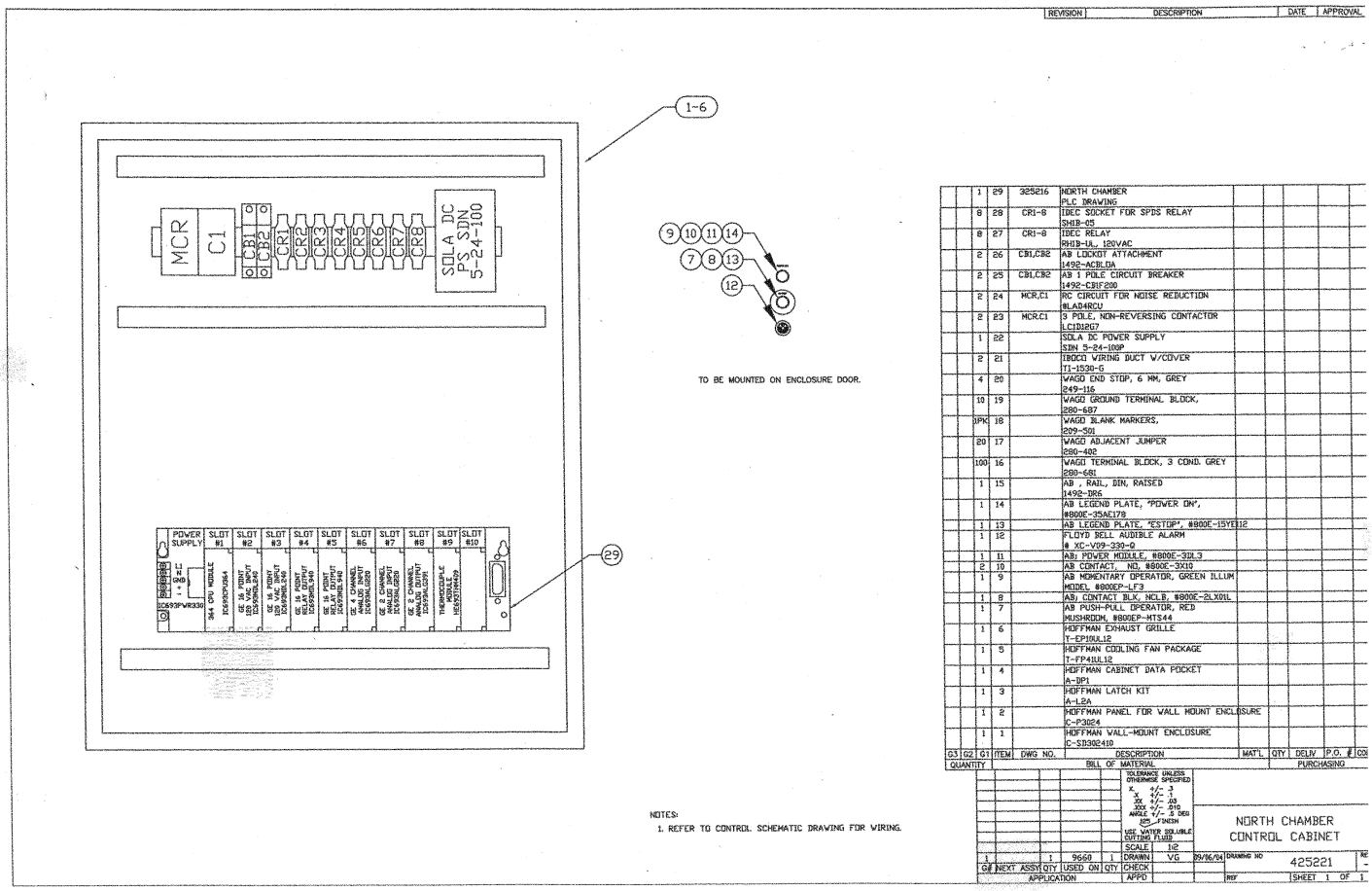
REVISION
DESCRIPTION
DATE
APPROVAL
1-6
MCR
C1
CB1
CB2
CR1
CR2
CR3
CR4
CR5
CR6
CR7
CR8
SOLA DC PS SDN 5-24-100
POWER SUPPLY
SLOT #1
SLOT #2
SLOT #3
SLOT #4
SLOT #5
SLOT #6
SLOT #7
SLOT #8
SLOT #9
SLOT #10
29
9 10 11 14
7 8 13
12
TO BE MOUNTED ON ENCLOSURE DOOR.
1 29 325216 NORTH CHAMBER PLC DRAWING
8 28 CR1-8 IDEC SOCKET FOR SPDS RELAY SH1B-05
8 27 CR1-8 IDEC RELAY RH1B-UL, 120VAC
2 26 CB1,CB2 AB LOCKOUT ATTACHMENT 1492-ACBLDA
2 25 CB1,CB2 AB 1 POLE CIRCUIT BREAKER 1492-CB1F200
2 24 MCR,C1 RC CIRCUIT FOR NOISE REDUCTION #LAD4RCU
2 23 MCR,C1 3 POLE, NON-REVERSING CONTACTOR LC1D12G7
1 22 SOLA DC POWER SUPPLY SDN 5-24-100P
2 21 IDECO WIRING DUCT W/COVER T1-1530-G
4 20 WAGO END STOP, 6 MM, GREY 249-116
10 19 WAGO GROUND TERMINAL BLOCK, 280-687
1PK 18 WAGO BLANK MARKERS, 209-501
20 17 WAGO ADJACENT JUMPER 280-402
100 16 WAGO TERMINAL BLOCK, 3 COND. GREY 280-681
1 15 AB , RAIL, DIN, RAISED 1492-DR5
1 14 AB LEGEND PLATE, "POWER ON", #800E-35AC178
1 13 AB LEGEND PLATE, "ESTOP", #800E-15YE112
1 12 FLOYD BELL AUDIBLE ALARM # XC-V09-330-0
1 11 AB; POWER MODULE, #800E-3DL3
2 10 AB CONTACT, NO, #800E-3X10
1 9 AB MOMENTARY OPERATOR, GREEN ILLUM MODEL #800EP-LF3
1 8 AB; CONTACT BLK, NCLB, #800E-2LX01L
1 7 AB PUSH-PULL OPERATOR, RED MUSHROOM, #800EP-HTS44
1 6 HOFFMAN EXHAUST GRILLE T-EP10UL12
1 5 HOFFMAN COOLING FAN PACKAGE T-FP4ULL12
1 4 HOFFMAN CABINET DATA POCKET A-DP1
1 3 HOFFMAN LATCH KIT A-LZA
1 2 HOFFMAN PANEL FOR WALL MOUNT ENCLOSURE C-P3024
1 1 HOFFMAN WALL-MOUNT ENCLOSURE C-SD302410
G3 G2 G1 ITEM DWG NO. DESCRIPTION MAT'L QTY DELIV P.O. #
QUANTITY BILL OF MATERIAL PURCHASING
NOTES:
1. REFER TO CONTROL SCHEMATIC DRAWING FOR WIRING.
TOLERANCE UNLESS OTHERWISE SPECIFIED
X +/- .3
X +/- .1
XX +/- .03
XXX +/- .010
ANGLE +/- .5 DEG
125 FINISH
USE WATER SOLUBLE CUTTING FLUID
SCALE 1:2
DRAWN VG 09/16/04
CHECK
APPD
NORTH CHAMBER
CONTROL CABINET
DRAWING NO 425221
REV
SHEET 1 OF 1
G# NEXT ASSY QTY USED ON QTY
APPLICATION

REVISION	DESCRIPTION	DATE	APPROVAL

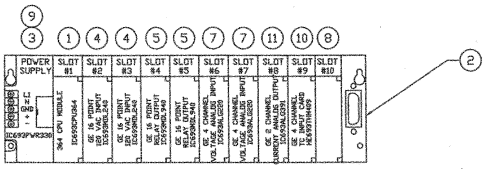

LOCATED IN CONTROL CABINET

		1	11		GE CURRENT OUTPUT MODULE 2 CHANNEL GE SUPPLY #IC693ALG391					
		1	10		GE 4 CHANNEL TC INPUT MODULE GE SUPPLY # HE693THM409					
		1	9		GE MINI CONVERTER HE 693SNPCBL\3NP TO RS 232 ADAPTER					
		2	8		GE FILLER MODULE GE SUPPLY # IC693ACC310					
		2	7		GE VOLTAGE INPUT MODULE 4 CHANNEL GE SUPPLY # IC693ALG220					
			6							
		2	5		GE RELAY OUTPUT MODULE 16 POINTS GE SUPPLY # IC693MDL940					
		2	4		GE 120 VAC INPUT MODULE 16 POINTS GE SUPPLY # IC693MDL240					
		1	3		GE POWER SUPPLY 120/240 VAC GE SUPPLY # IC693PWR330					
		1	2		GE BASE USE WITH CPU 364 GE SUPPLY # IC693CHS391					
		1	1		GE CPU 364 MODULE GE SUPPLY # IC693CPU364					
G3	G2	G1	ITEM	DWG NO.	DESCRIPTION	MAT'L	QTY	DELIV	P.O. #	COD
QUANTITY					BILL OF MATERIAL			PURCHASING		

NOTES:

1. REFER TO CONTROL SCHEMATIC DRAWING FOR WIRING.

					TOLERANCE UNLESS OTHERWISE SPECIFIED X ±/- .3 X ±/- .1 XX ±/- .03 XXX ±/- .010 ANGLE ±/- .5 DEG FINISH USE WATER SOLUBLE CUTTING FLUID					
					SCALE	NONE				
1		1	9660	1	DRAWN	VG	08/15/04	DRAWING NO	325216	RE
G#	NEXT ASSY	QTY	USED ON	QTY	CHECK					
APPLICATION					APPD			REV	SHEET 1 OF 1	

"NORTH"
PLC ASSEMBLY

REVISION	DESCRIPTION	DATE	APPROVAL

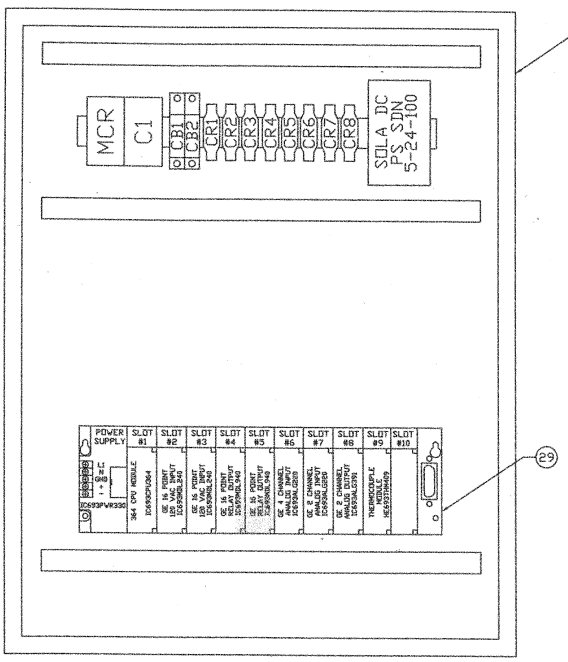

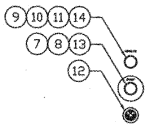

TO BE MOUNTED ON ENCLOSURE DOOR.

G3	G2	G1	ITEM	DWG NO.	DESCRIPTION	MAT'L	QTY	DELIV	P.O. #	COD
			1	29	NORTH CHAMBER PLC DRAWING					
			8	28	CR1-8 IDEC SOCKET FOR SPDS RELAY SH1B-05					
			8	27	CR1-8 IDEC RELAY RH1B-UL, 120VAC					
			2	26	CB1,CB2 AB LOCKOT ATTACHMENT 1492-ACBLOA					
			2	25	CB1,CB2 AB 1 POLE CIRCUIT BREAKER 1492-CBIF200					
			2	24	MCR,C1 RC CIRCUIT FOR NOISE REDUCTION #LA24RCU					
			2	23	MCR,C1 3 POLE, NON-REVERSING CONTACTOR LC1D12G7					
			1	22	SOLA DC POWER SUPPLY SDN 5-24-100P					
			2	21	IDECO WIRING DUCT W/COVER T1-1530-G					
			4	20	WAGO END STOP, 6 MM, GREY 249-116					
			10	19	WAGO GROUND TERMINAL BLOCK, 280-687					
			1PK	18	WAGO BLANK MARKERS, 209-501					
			20	17	WAGO ADJACENT JUMPER 280-402					
			100	16	WAGO TERMINAL BLOCK, 3 COND. GREY 280-681					
			1	15	AB , RAIL, DIN, RAISED 1492-DR6					
			1	14	AB LEGEND PLATE, "POWER ON", #800E-35AE178					
			1	13	AB LEGEND PLATE, "ESTOP", #800E-15YE112					
			1	12	FLOYD BELL AUDIBLE ALARM # XC-V09-330-Q					
			1	11	AB, POWER MODULE, #800E-30L3					
			2	10	AB CONTACT, NO, #800E-3X10					
			1	9	AB MOMENTARY OPERATOR, GREEN ILLUM MODEL #800EP-LF3					
			1	8	AB, CONTACT BLK, NCLB, #800E-2LX01L					
			1	7	AB PUSH-PULL OPERATOR, RED MUSHROOM, #800EP-MTS44					
			1	6	HOFFMAN EXHAUST GRILLE T-EP10UL12					
			1	5	HOFFMAN COOLING FAN PACKAGE T-FP41UL12					
			1	4	HOFFMAN CABINET DATA POCKET A-DP1					
			1	3	HOFFMAN LATCH KIT A-L2A					
			1	2	HOFFMAN PANEL FOR WALL MOUNT ENCLOSURE C-P3024					
			1	1	HOFFMAN WALL-MOUNT ENCLOSURE C-SD302410					

QUANTITY — BILL OF MATERIAL — PURCHASING

NOTES:
1. REFER TO CONTROL SCHEMATIC DRAWING FOR WIRING.

					TOLERANCE UNLESS OTHERWISE SPECIFIED X. +/- .3 .X +/- .1 .XX +/- .03 .XXX +/- .010 ANGLE +/- .5 DEG 125 FINISH USE WATER SOLUBLE CUTTING FLUID			
					SCALE	1:2		
1		1	9660	1	DRAWN	VG	09/06/94	DRAWING NO 425222 REV –
G#	NEXT ASSY	QTY	USED ON	QTY	CHECK			
APPLICATION					APPD			REF SHEET 1 OF 1

SOUTH CHAMBER
CONTROL CABINET

REVISION	DESCRIPTION	DATE	APPROVAL

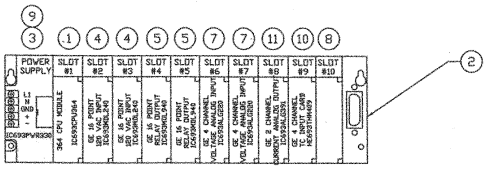

LOCATED IN CONTROL CABINET

G3	G2	G1	ITEM	DWG NO.	DESCRIPTION	MAT'L	QTY	DELIV	P.O. #	COD
		1	11		GE CURRENT OUTPUT MODULE 2 CHANNEL GE SUPPLY #IC693ALG391					
		1	10		GE 4 CHANNEL TC INPUT MODULE GE SUPPLY # HE693THM409					
		1	9		GE MINI CONVERTER HE 693SNPCBL\SNP TO RS 232 ADAPTER					
		2	8		GE FILLER MODULE GE SUPPLY # IC693ACC310					
		2	7		GE VOLTAGE INPUT MODULE 4 CHANNEL GE SUPPLY # IC693ALG220					
			6							
		2	5		GE RELAY OUTPUT MODULE 16 POINTS GE SUPPLY # IC693MDL940					
		2	4		GE 120 VAC INPUT MODULE 16 POINTS GE SUPPLY # IC693MDL240					
		1	3		GE POWER SUPPLY 120/240 VAC GE SUPPLY # IC693PWR330					
		1	2		GE BASE USE WITH CPU 364 GE SUPPLY # IC693CHS391					
		1	1		GE CPU 364 MODULE GE SUPPLY # IC693CPU364					

QUANTITY — BILL OF MATERIAL — PURCHASING

NOTES:

1. REFER TO CONTROL SCHEMATIC DRAWING FOR WIRING.

G#	NEXT ASSY	QTY	USED ON	QTY
	1	1	9660	1

APPLICATION

TOLERANCE UNLESS OTHERWISE SPECIFIED
X. +/- .3
.X +/- .1
.XX +/- .03
.XXX +/- .010
ANGLE +/- .5 DEG
125 FINISH
USE WATER SOLUBLE CUTTING FLUID

SCALE	NONE			
DRAWN	VG	08/15/04	DRAWING NO	325217
CHECK			REF	
APPD			SHEET 1 OF 1	

'SOUTH'
PLC ASSEMBLY