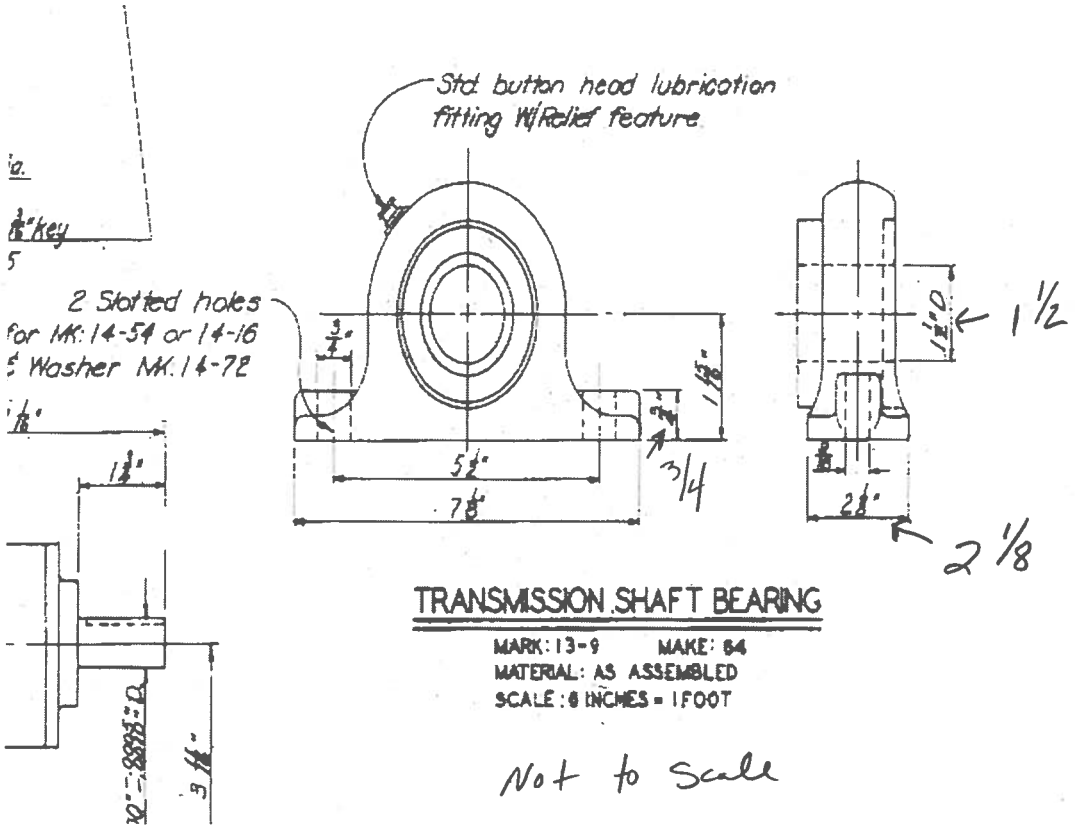

TRANSMISSION SHAFT BEARING

MARK: 13-9 MAKE: 84
MATERIAL: AS ASSEMBLED
SCALE: 6 INCHES = 1 FOOT

Not to Scale

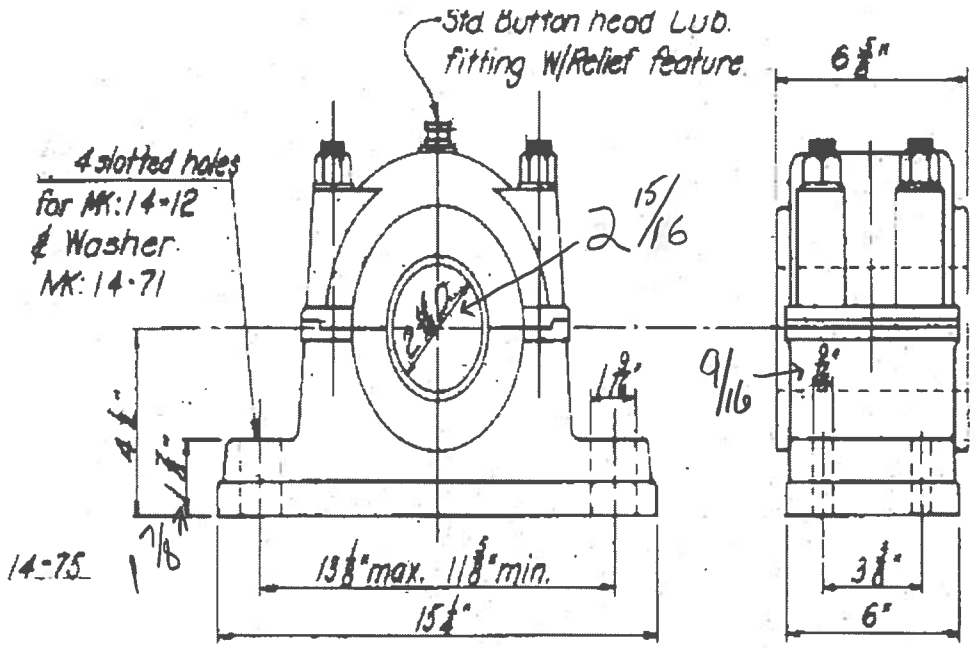

holes
:14-20

OUTBOARD BEARING

MARK: 13-3 MAKE: 16
MATERIAL: AS ASSEMBLED
SCALE: 3 INCHES = 1 FOOT

Not to scale