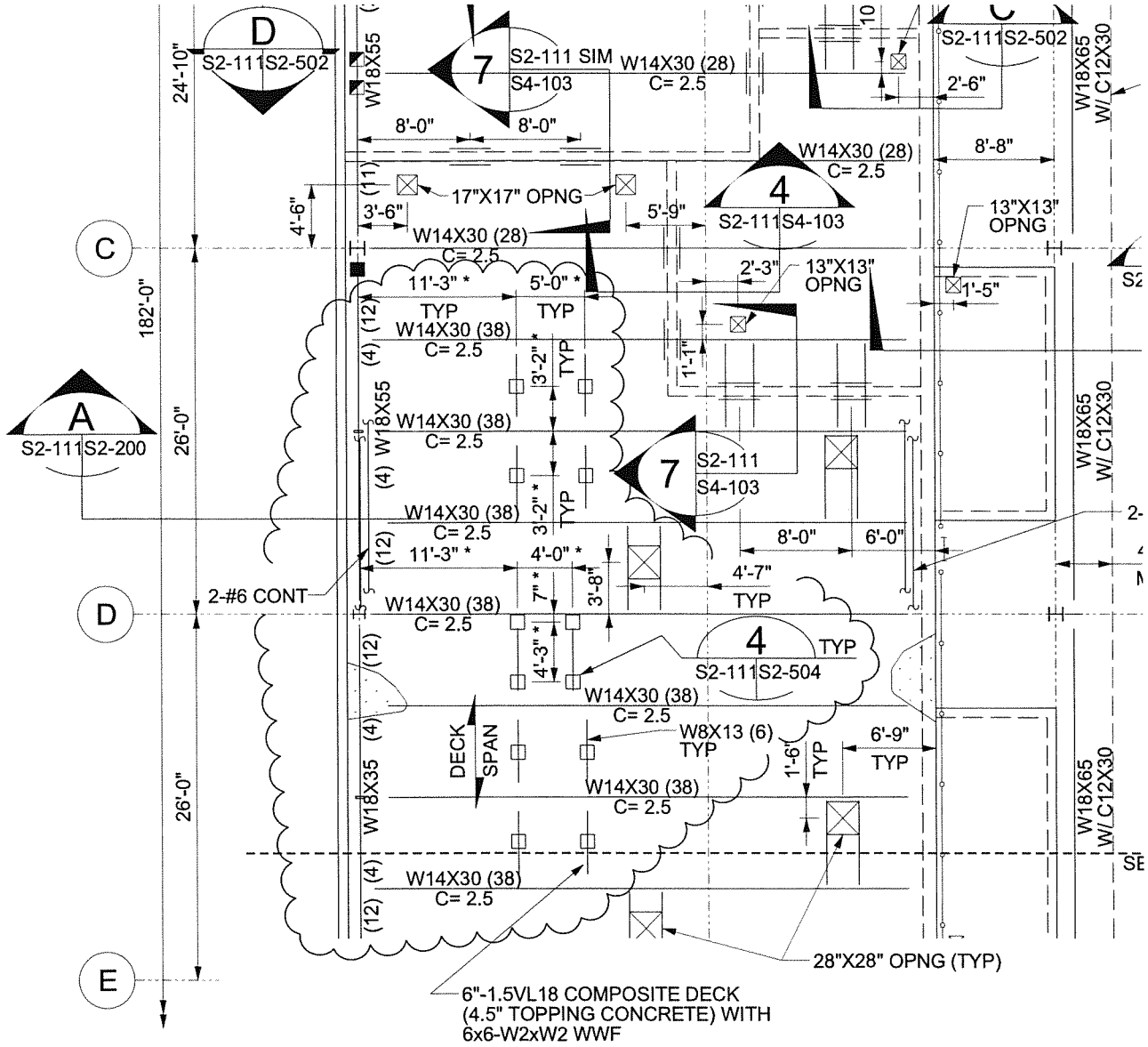
D
S2-111S2-502
24'-10"
W18X55
7
S2-111 SIM
S4-103
W14X30 (28)
C= 2.5
8'-0"
8'-0"
S2-111S2-502
W18X65
W/C12X30
2'-6"
W14X30 (28)
C= 2.5
8'-8"
17"X17" OPNG
4
3'-6"
5'-9"
S2-111S4-103
13"X13"
OPNG
4'-6"
C
W14X30 (28)
C= 2.5
2'-3"
13"X13"
OPNG
1'-5"
182'-0"
11'-3" *
5'-0" *
TYP
TYP
W14X30 (38)
C= 2.5
3'-2" *
TYP
1'-1"
A
S2-111S2-200
26'-0"
W18X55
W14X30 (38)
C= 2.5
7
S2-111
S4-103
W18X65
W/C12X30
W14X30 (38)
C= 2.5
3'-2" *
TYP
8'-0"
6'-0"
11'-3" *
4'-0" *
4'-7"
TYP
2-#6 CONT
7" *
3'-8"
D
W14X30 (38)
C= 2.5
4
TYP
4'-3" *
S2-111S2-504
W14X30 (38)
C= 2.5
DECK
SPAN
W8X13 (6)
TYP
1'-6"
TYP
6'-9"
TYP
26'-0"
W18X35
W14X30 (38)
C= 2.5
W18X65
W/C12X30
W14X30 (38)
C= 2.5
E
28"X28" OPNG (TYP)
6"-1.5VL18 COMPOSITE DECK
(4.5" TOPPING CONCRETE) WITH
6x6-W2xW2 WWF

S2-111

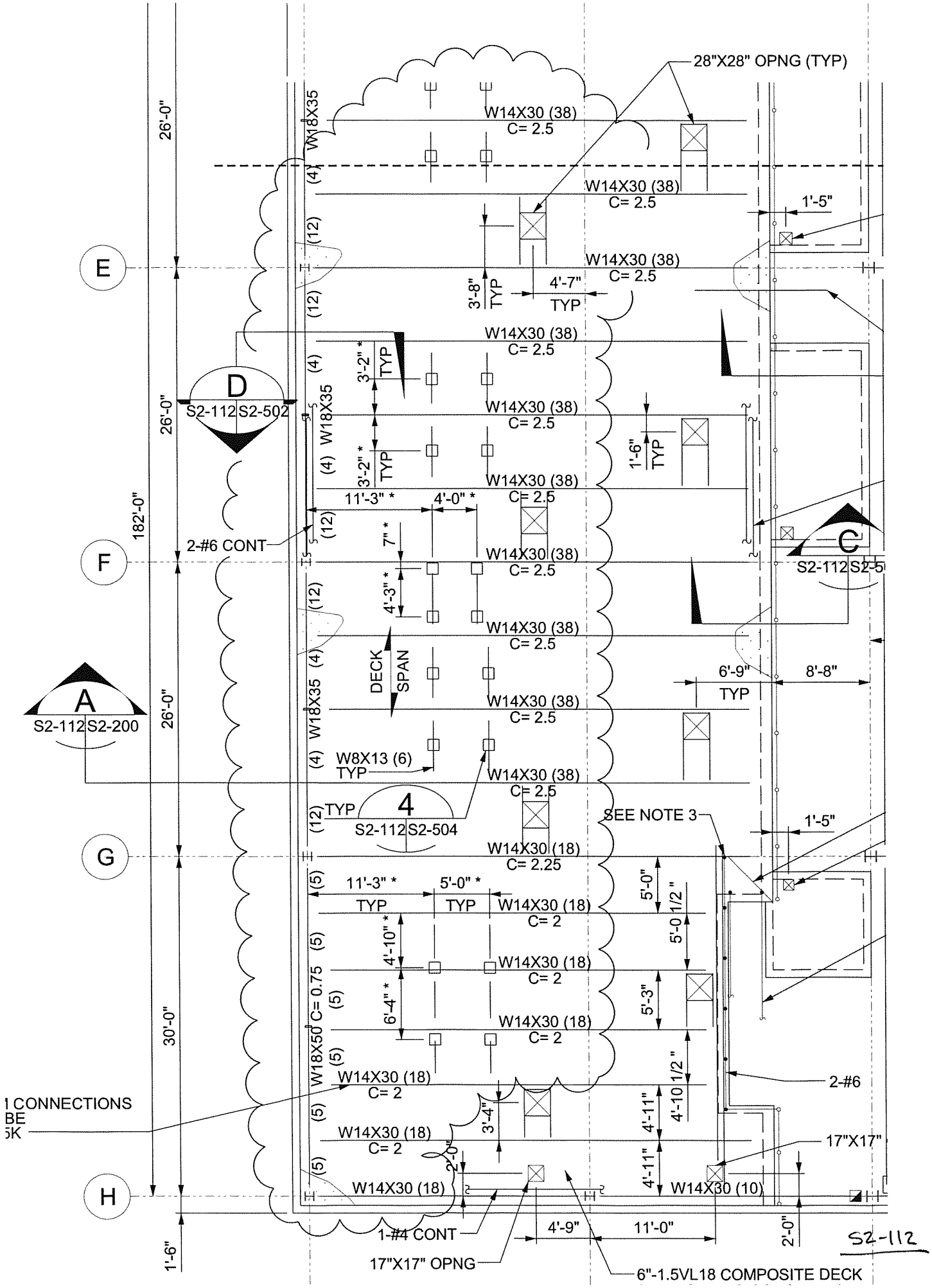
28"X28" OPNG (TYP)
W14X30 (38)
C= 2.5
W18X35
(4)
(12)
1'-5"
E
3'-8"
TYP
4'-7"
TYP
3'-2" *
D
S2-112 S2-502
1'-6"
TYP
11'-3" *
4'-0" *
2-#6 CONT
F
7" *
4'-3" *
DECK
SPAN
C
S2-112 S2-5
6'-9"
8'-8"
A
S2-112 S2-200
W8X13 (6)
TYP
4
S2-112 S2-504
SEE NOTE 3
G
W14X30 (18)
C= 2.25
5'-0"
5'-0 1/2 "
4'-10" *
6'-4" *
5'-3"
C= 0.75
W18X50
2-#6
4'-11"
4'-10 1/2 "
3'-4"
17"X17"
H
W14X30 (10)
2'-0"
1-#4 CONT
17"X17" OPNG
4'-9"
11'-0"
6"-1.5VL18 COMPOSITE DECK
26'-0"
182'-0"
30'-0"
1'-6"
S2-112

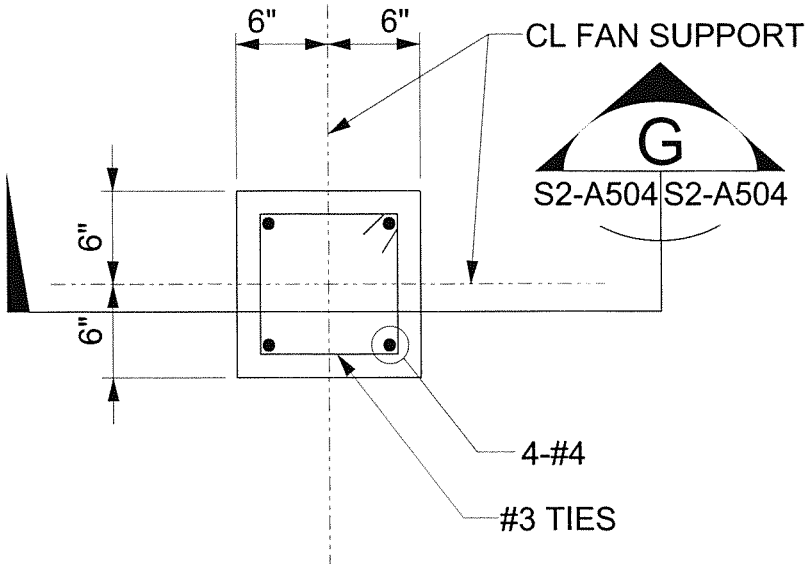


4 DETAIL

S2-111 S2-504 SCALE: 1" = 1'-0"

S2-112

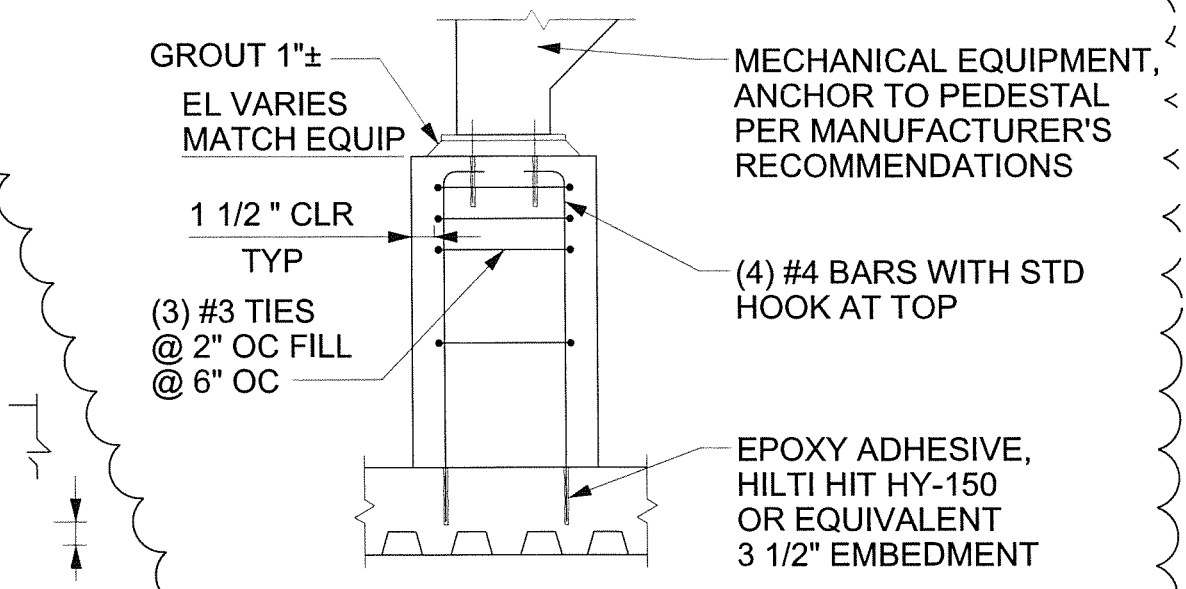


G SECTION

S2-504 S2-504 SCALE: 1" = 1'-0"

S2-504