NOTES: UNLESS OTHERWISE SPECIFIED
NOTES:UNLESS OTHERWISE SPECIFIED:

1. LUBRICATE ITEMS-11 AND ITEMS-13 WITH BRAYCOTE 601, REHEOLUBE 2000 OR EQUIVALENT VACUUM CHAMBER COMPATIBLE GREASE. TIGHTEN ITEM-11 TO 95 FT-LBS. TIGHTEN ITEM-13 TO 15 FT-LBS.

2. ORIGINAL SOURCE OF SUPPLY: MCMASTER-CARR SUPPLY CO. PO BOX 440 NEW BRUNSWICK, NJ 08903-0440

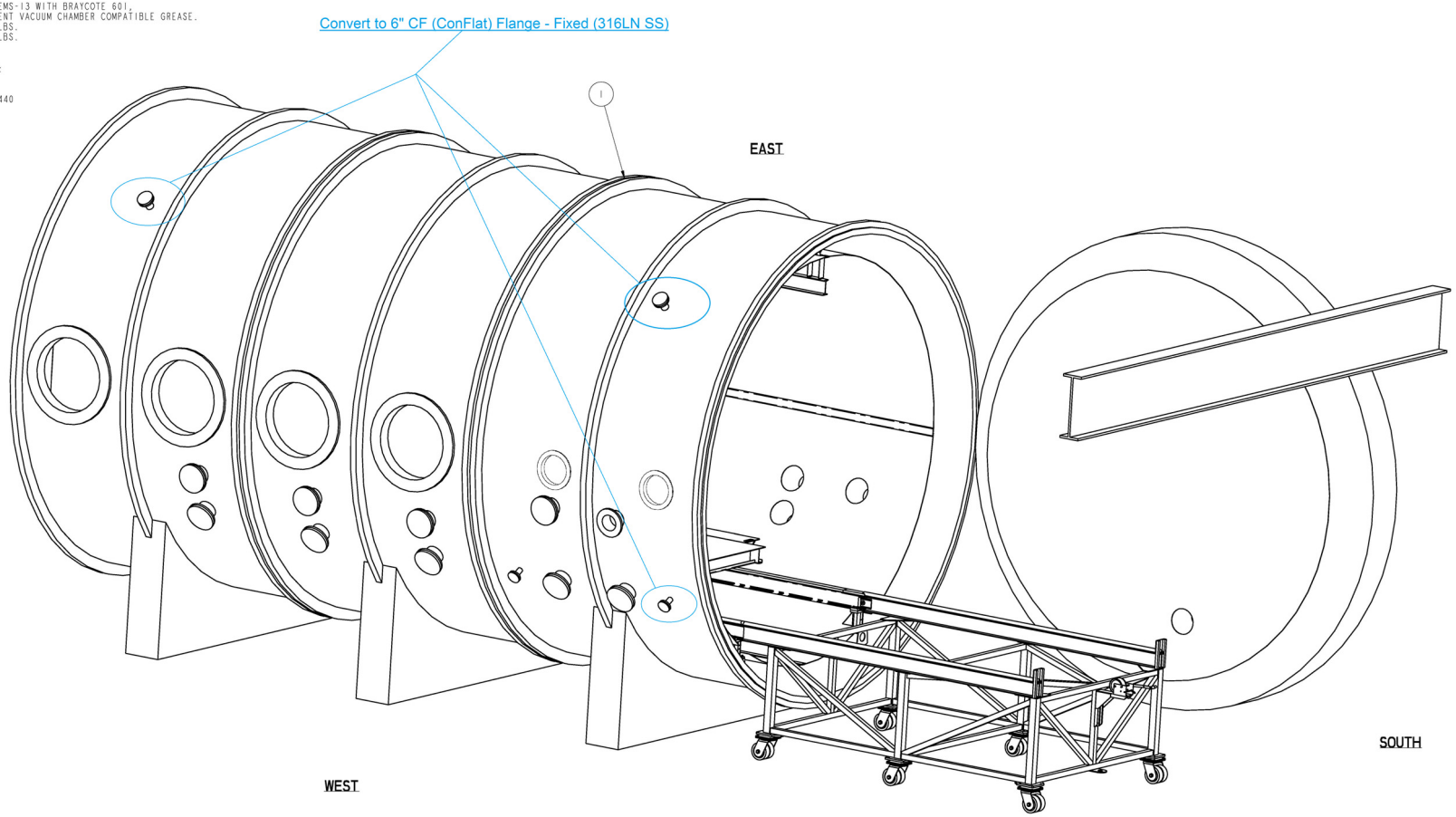

SCALE 0.050

ITEM NO	QTY REQD	CAGE NUMBER	PART NUMBER	NOMENCLATURE OR DESCRIPTION	MATERIAL AND SPECIFICATION
14	64		9294K11	WASHER,BELLEVILLE .501D	17-7P11, ST
13	32		91251A720	SCR,CAP,SC,SS .500-13UNC X 2.0LG	ASTM A574, 180 KSI
12	32		98038A265	WASHER, FLAT, SS .500 ID	ASTM F436
11	32		91251A020	SCR,CAP,SC,SS .500-20UNF X 2.0LG	ASTM A574, 180 KSI
10	8		GL-GM-0133	SIDE SKIRT, 10 FT PLATFORM	
9	1		GL-GM-0123-2	TRACK RAIL ASSY, RIGHT	
8	1		GL-GM-0123-1	TRACK RAIL ASSY, LEFT	
7	2		GL-GM-0122-2	TOWER, PEDESTAL, FIXED	
6	6		GL-GM-0122-1	TOWER, PEDESTAL, SLIDING	
5	8		GL-GM-0129	MOD, PEDESTAL BASE WELDMENT	
4	2		11161-4	REMOVABLE TABLE, 6 FT X 10 FT	
3	1		GL-GM-0102	REMOVABLE TABLE, 10 FT X 10 FT	
2	1		GL-GM-0111	DOLLY ASSY, TVAC CHAMBER	
1	AR		----------	THERMAL VACUUM CHAMBER	

PARTS LIST

REVISIONS				
ZONE	REV	DESCRIPTION	DATE	APPROVED

INTERPRET PER DOD-STD-100

DIMENSIONING & TOLERANCING PER ANSI (USASI) Y14.5M-82

UNLESS OTHERWISE SPECIFIED DIMENSIONS ARE IN INCHES TOLERANCES: ANGLES ± 0.5° DECIMALS .XX ± .06 DECIMALS .XXX ± .010

DWN RSB	092206
CHK P.DIZON	092206
ENG P.DIZON	092206

NAVAL RESEARCH LABORATORY
NAVAL CENTER FOR SPACE TECHNOLOGY
WASHINGTON, D.C. 20375-5355

TEST FACILITY, TVAC CHAMBER, BLDG A59, NRL

RELEASED BY	DATE	APPROVED BY P.DIZON	DATE 092206
ERN NO.		APPROVED BY	DATE

SIZE	CAGE NUMBER	DWG NO.
E	81995	GL-GM-0130

SCALE 0.013 SHEET 1 OF 7

-	-	REVISION
2	1	SHEET

REV STATUS OF SHEETS

DASH NO | NEXT ASSY / USED ON

APPLICATION

NAME:BROOKS OBJECT:GL-GM-0130_1 DATE:22-Sep-06 14:12:26

REVISIONS				
ZONE	REV	DESCRIPTION	DATE	APPROVED

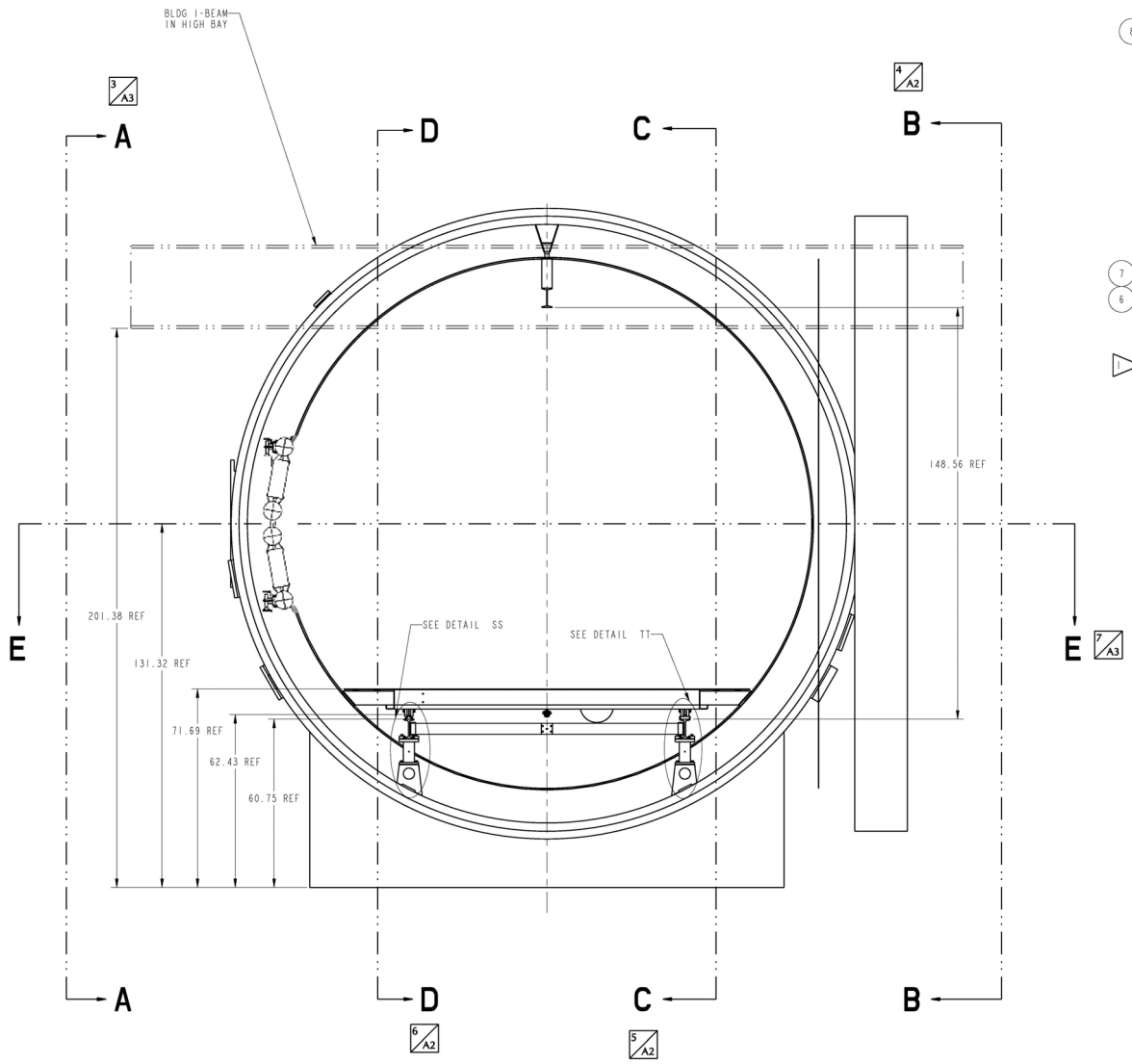

SOUTH PLAN VIEW
SCALE 0.060
(TROLLEY REMOVED
FOR CLARITY)

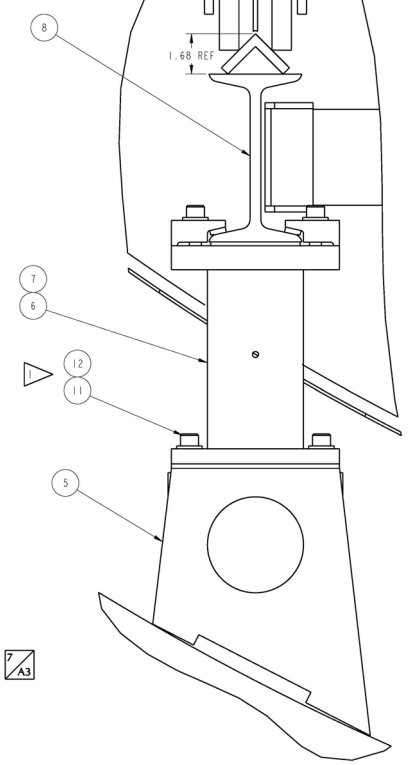

DETAIL SS
SCALE 0.500

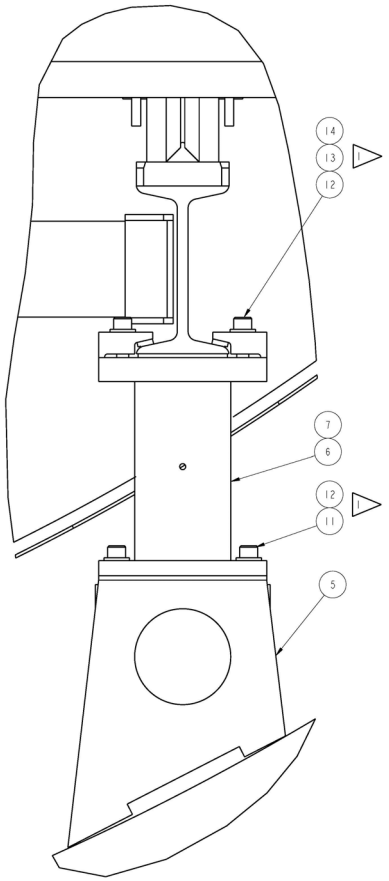

DETAIL TT
SCALE 0.500

DWN ASH	092206	NAVAL RESEARCH LABORATORY NAVAL CENTER FOR SPACE TECHNOLOGY WASHINGTON, D.C. 20375-5355	
CHK P. DIZON	092206		
ENG P. DIZON	092206	TEST FACILITY, TVAC CHAMBER, BLDG A59, NRL	
APPROVED BY P.DIZON	DATE 092206	SIZE E / CAGE NUMBER 81995	DWG NO. GL-GM-0130
APPROVED BY	DATE	SCALE 0.013	SHEET 7 OF 7

NAME:BROOKS OBJECT:GL-GM-0130_2 DATE:22-Sep-06 14:12:30

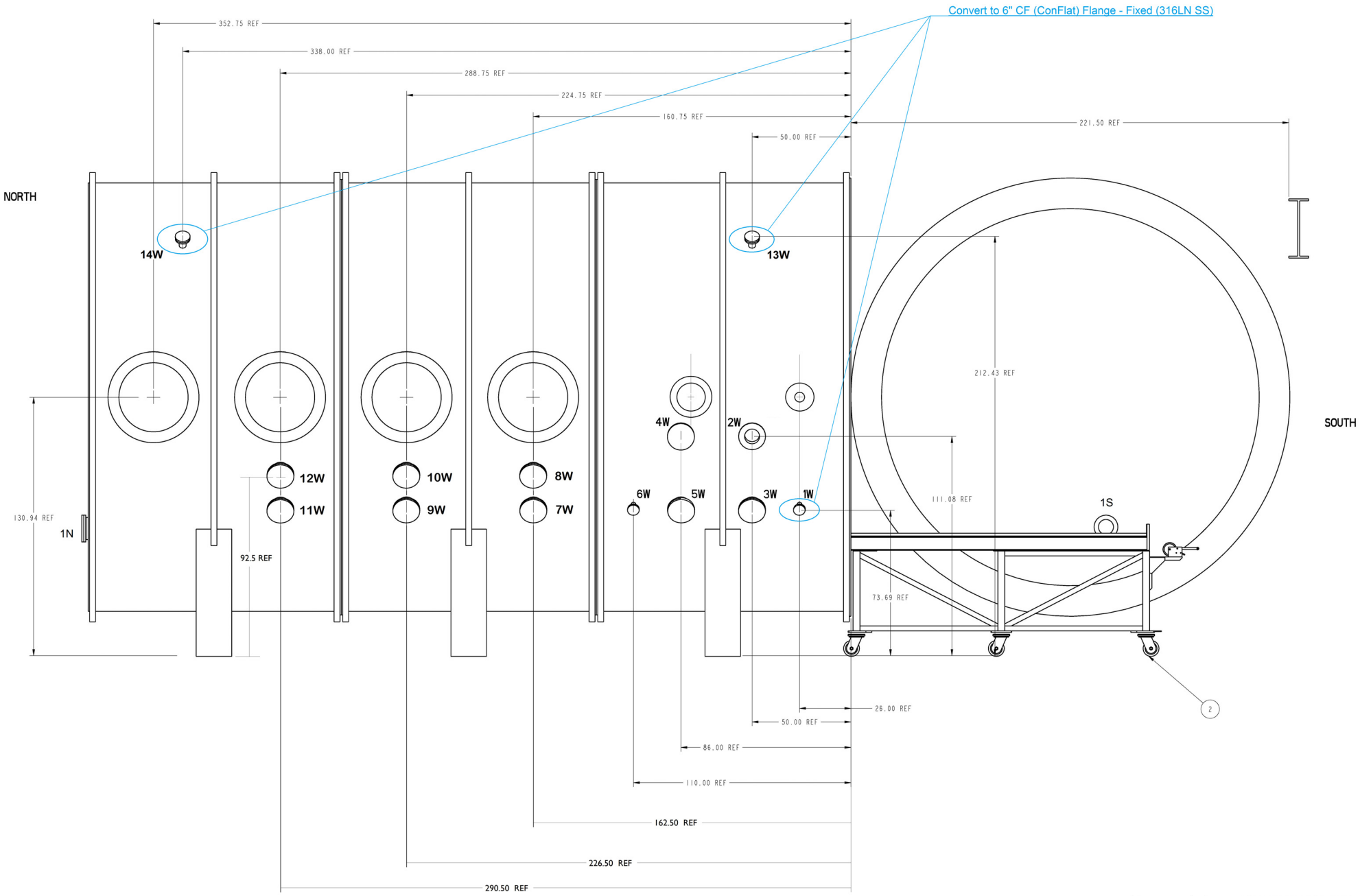

VIEW A-A
WEST SIDE EXTERIOR

2/D4

REVISIONS				
ZONE	REV	DESCRIPTION	DATE	APPROVED

DWN RSB	092206	NAVAL RESEARCH LABORATORY NAVAL CENTER FOR SPACE TECHNOLOGY WASHINGTON, D.C. 20375-5355
CHK P.DIZON	092206	
ENG P.DIZON	092206	TEST FACILITY, TVAC CHAMBER, BLDG A59, NRL
APPROVED BY P.DIZON	DATE 092206	SIZE E · CAGE NUMBER 81995 · DWG NO. GL-GM-0130
APPROVED BY	DATE	SCALE 0.013 · SHEET 3 OF 7

NAME:BROOKS OBJECT:GL-GM-0130_3 DATE:22-Sep-06 14:12:34

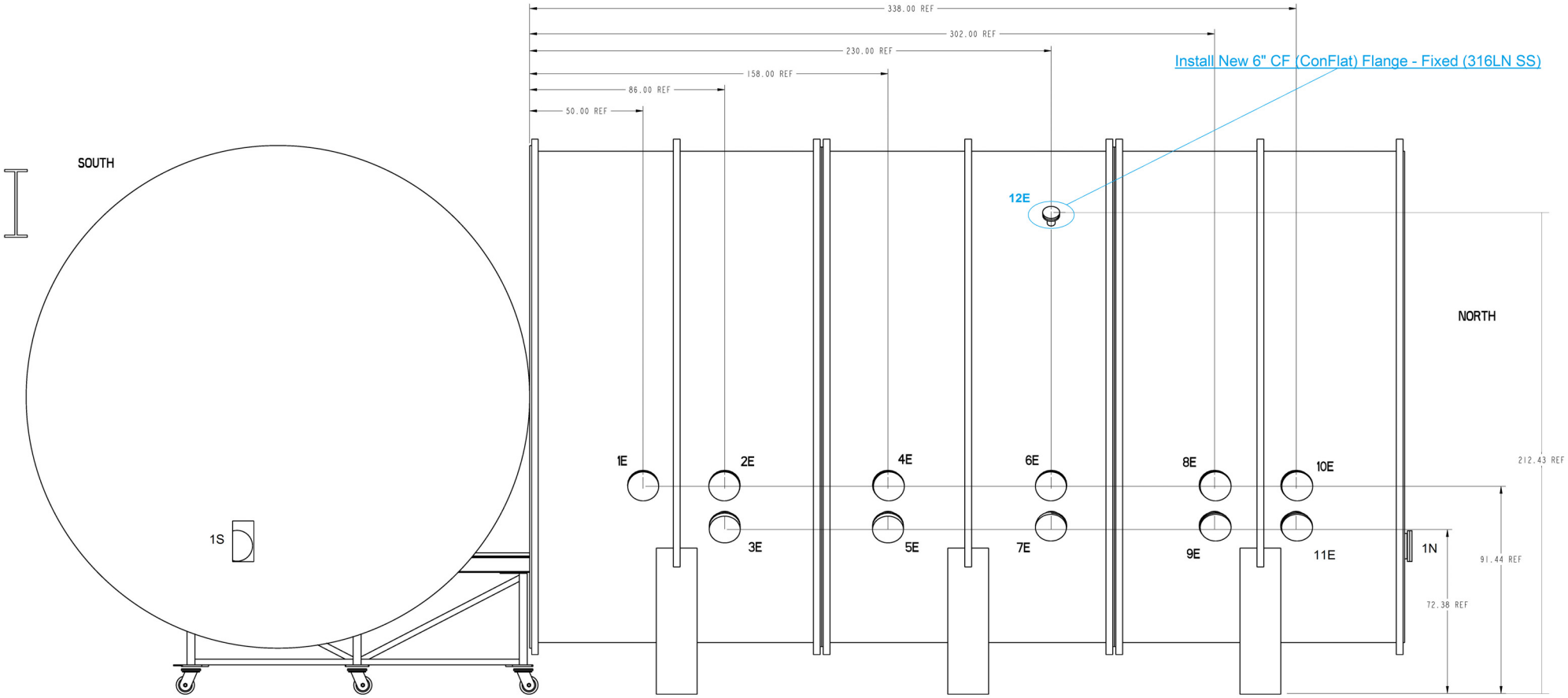

VIEW B-B
EAST SIDE EXTERIOR

REVISIONS				
ZONE	REV	DESCRIPTION	DATE	APPROVED

DWN RSH	092206	NAVAL RESEARCH LABORATORY NAVAL CENTER FOR SPACE TECHNOLOGY WASHINGTON, D.C. 20375-5355
CHK P.DIZON	092206	
ENG P.DIZON	092206	TEST FACILITY, TVAC CHAMBER, BLDG A59, NRL
APPROVED BY P.DIZON	DATE 092206	SIZE E · CAGE NUMBER 81995 · DWG NO. GL-GM-0130
APPROVED BY	DATE	SCALE 0.013 · SHEET 4 OF 7

NAME:BROOKS OBJECT:GL-GM-0130_4 DATE:22-Sep-06 14:12:36

REVISIONS				
ZONE	REV	DESCRIPTION	DATE	APPROVED

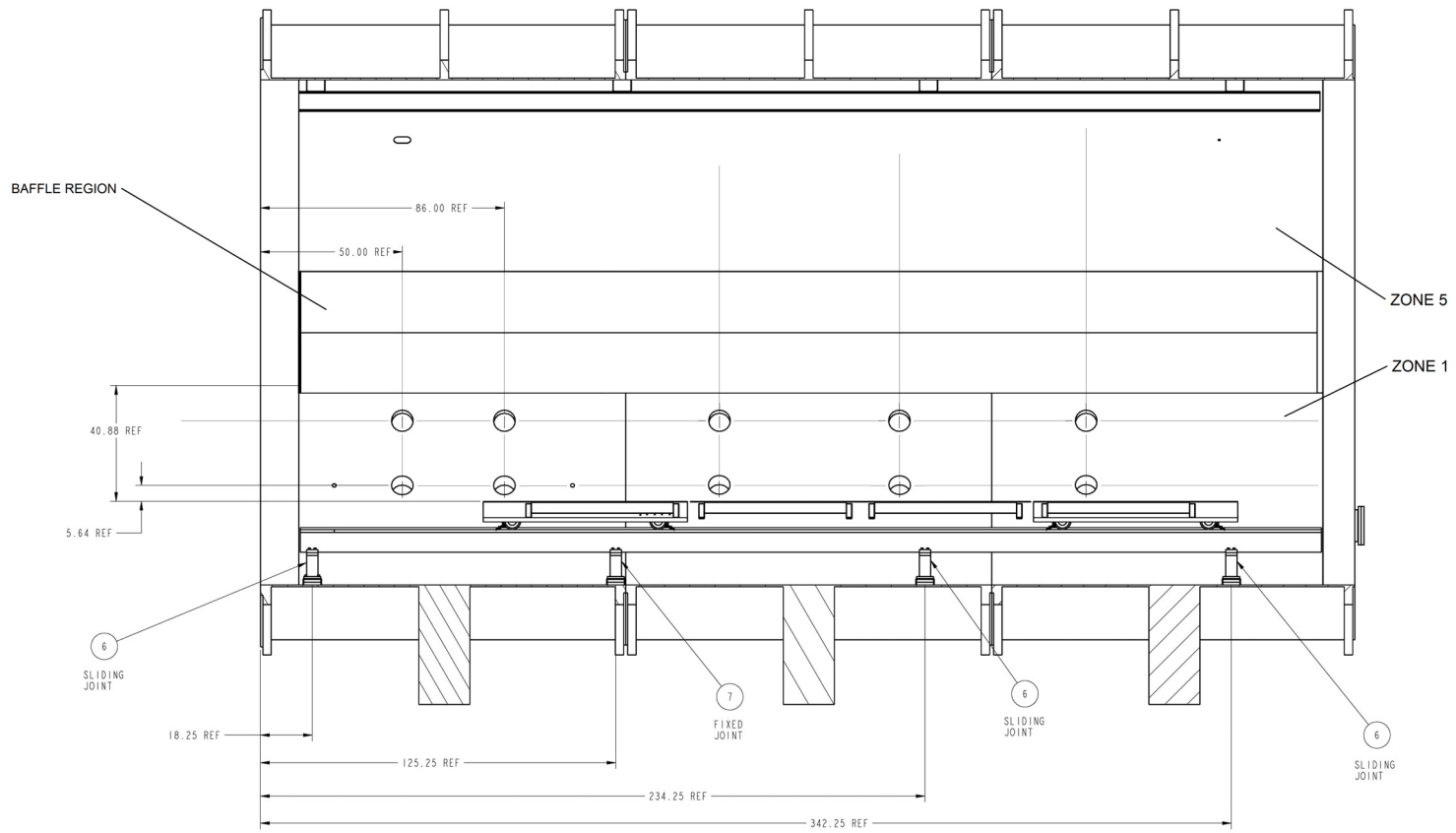

SECTION C-C
SCALE 0.060
(WEST INSIDE WALL)
2/A3

DWN RSB	092206	NAVAL RESEARCH LABORATORY NAVAL CENTER FOR SPACE TECHNOLOGY WASHINGTON, D.C. 20375-5355
CHK P.DIZON	092206	
ENG P.DIZON	092206	TEST FACILITY, TVAC CHAMBER, BLDG A59, NRL
APPROVED BY P.DIZON	DATE 092206	SIZE E · CAGE NUMBER 81995 · DWG NO. GL-GM-0130
APPROVED BY	DATE	SCALE 0.013 · SHEET 5 OF 7

NAME:BROOKS OBJECT:GL-GM-0130_5 DATE:22-Sep-06 14:12:37

REVISIONS				
ZONE	REV	DESCRIPTION	DATE	APPROVED

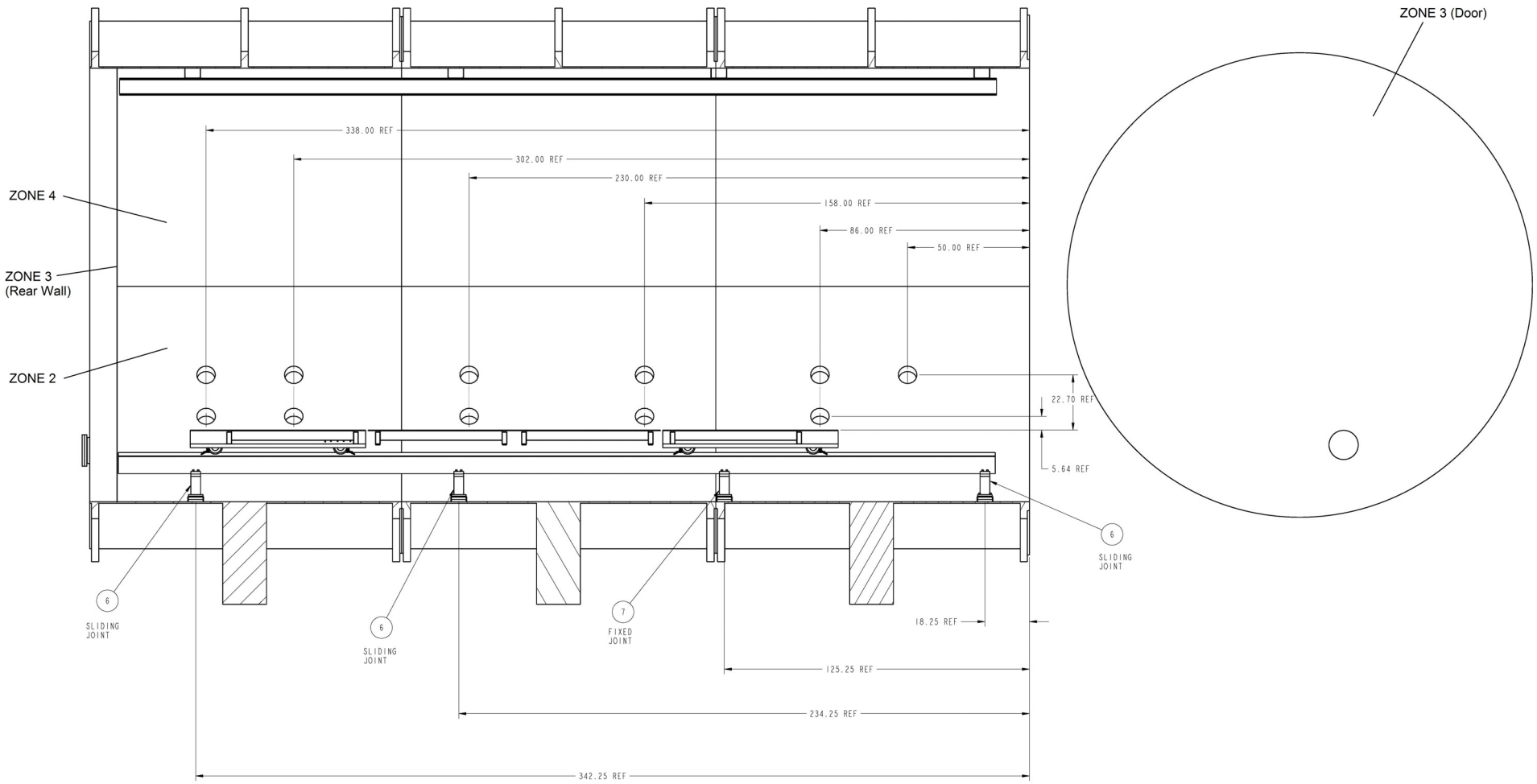

2/A4 **SECTION D-D**
SCALE 0.063
(EAST INSIDE WALL)

DWN ASH	092206	NAVAL RESEARCH LABORATORY NAVAL CENTER FOR SPACE TECHNOLOGY WASHINGTON, D.C. 20375-5355
CHK P.DIZON	092206	
ENG P.DIZON	092206	TEST FACILITY, TVAC CHAMBER, BLDG A59, NRL
APPROVED BY P.DIZON	DATE 092206	SIZE E / CAGE NUMBER 81995 / DWG NO. GL-GM-0130
APPROVED BY	DATE	SCALE 0.013 / SHEET 6 OF 7

NAME:BROOKS OBJECT:GL-GM-0130_6 DATE:22-Sep-06 14:12:59

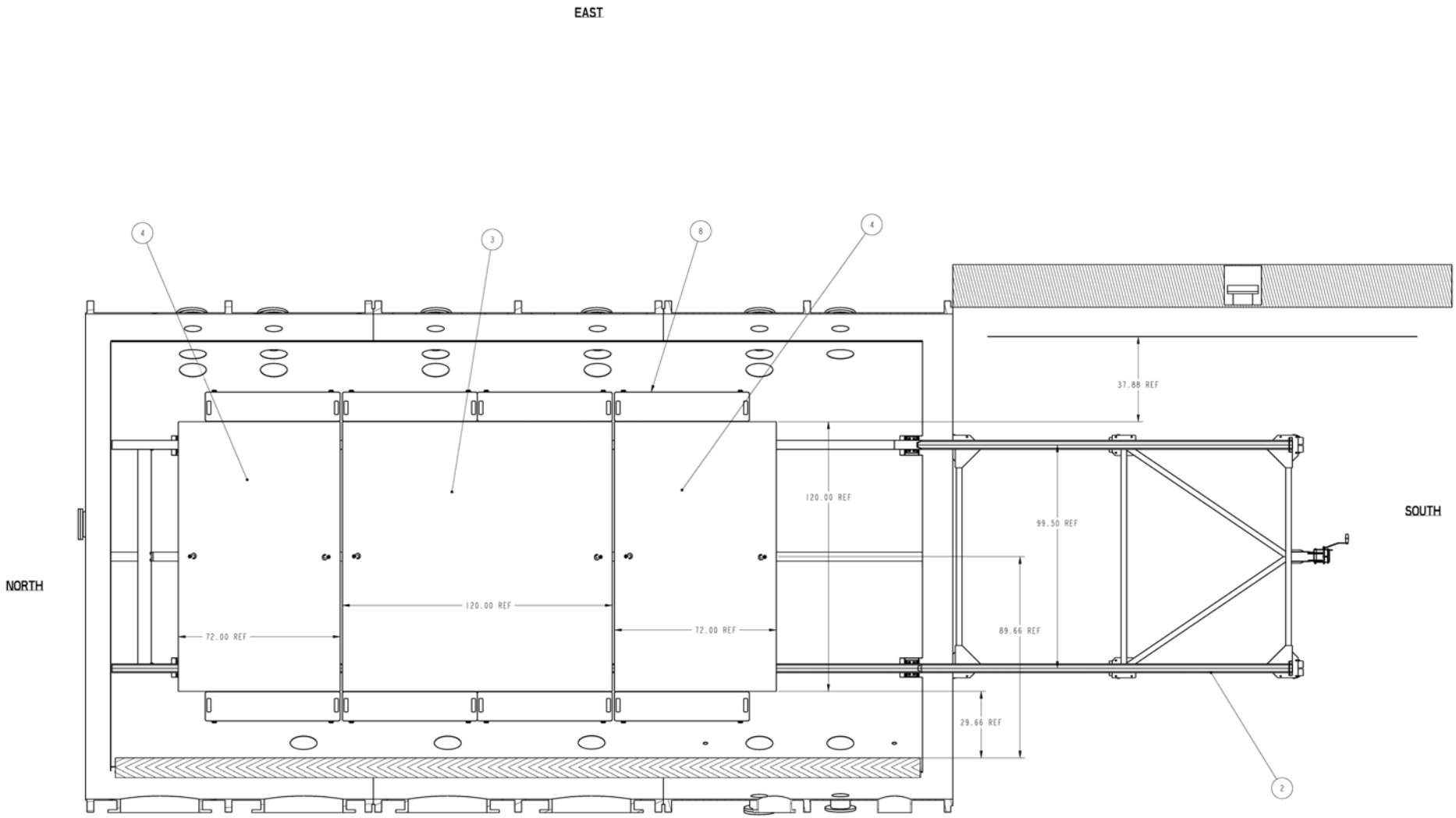

SECTION E-E
SCALE 0.060

2/B2

REVISIONS				
ZONE	REV	DESCRIPTION	DATE	APPROVED

NAVAL RESEARCH LABORATORY
NAVAL CENTER FOR SPACE TECHNOLOGY
WASHINGTON, D.C. 20375-5355

TEST FACILITY,
TVAC CHAMBER,
BLDG A59, NRL

DWN JSH	092206			
CHK P.DIZON	092206			
ENG P.DIZON	092206			
APPROVED BY P.DIZON	DATE 092206	SIZE E	CAGE NUMBER 81995	DWG NO. GL-GM-0130
APPROVED BY	DATE	SCALE 0.013		SHEET 7 OF 7

NAME:BROOKS OBJECT:GL-GM-0130_7 DATE:22-Sep-06 14:12:41