US Army Corps
of Engineers
Omaha District

FY15 P-341 CONSTRUCT ADDITION B1134

MINOT AFB, NORTH DAKOTA

PROJECT NUMBER: QJVF143101

SOLICITATION NUMBER: W9128F-16-B-0007

BURNS & MCDONNELL
8201 NORMAN CENTER DR. #300
BLOOMINGTON, MN 55437
952-656-6003

APRIL 2016
FOR ADVERTISEMENT

COPYRIGHT © 2016 BURNS & McDONNELL ENGINEERING COMPANY, INC.

CIVIL ENGINEER	ARCHITECT	STRUCTURAL ENGINEER
STATE OF MISSOURI — ANDREW JAMES LOFTUS NUMBER PE-2013019071 — PROFESSIONAL ENGINEER 4-22-2016	WISCONSIN — TAEJOONG KIM A-9125-5 KANSAS CITY MO. — ARCHITECT March 29, 2016	STATE OF MISSOURI — ERIC S. BAHR NUMBER PE-2010000787 — PROFESSIONAL ENGINEER
I hereby certify that this plan, specification, or report was prepared by me or under my direct supervision and that I am a duly Licensed Professional Engineer under the laws of the state of Minnesota.	I hereby certify that this plan, specification, or report was prepared by me or under my direct supervision and that I am a duly Licensed Professional Engineer under the laws of the state of Minnesota.	I hereby certify that this plan, specification, or report was prepared by me or under my direct supervision and that I am a duly Licensed Professional Engineer under the laws of the state of Minnesota.
CHRISTOPHER CAHILL, PE	GRAHAM EDWARD JOHNSON, PE	KEVIN O. WATSON, PE
DATE: 4/22/16 LIC. NO. 26409	DATE: 4/22/16 LIC. NO. 51389	DATE: 4/22/16 LIC. NO. 51801
FIRE PROTECTION ENGINEER	MECHANICAL ENGINEER	ELECTRICAL ENGINEER

THIS PROJECT WAS DESIGNED BY THE OMAHA DISTRICT OF THE US ARMY CORPS OF ENGINEERS. THE INITIALS OR SIGNATURES AND REGISTRATION DESIGNATIONS OF INDIVIDUALS APPEAR ON THESE PROJECT DOCUMENTS WITHIN THE SCOPE OF THEIR EMPLOYMENT AS REQUIRED BY ER 1110-1-8152.

THE FOLLOWING SIGNATURES BELOW INDICATE OFFICIAL APPROVAL OF ALL DRAWINGS IN THIS SET DATED: 2/23/16

US Army Corps
of Engineers
Omaha District

DESIGN FILE	DRAWING CODE	SHEET NO.	DESCRIPTION
MIA8G-000	AF212-220	G-000	TITLESHEET
MIA8G-001	AF212-220	G-001	SHEET INDEX
MIA8LS001	AF212-220	LS001	LIFE SAFETY NARRATIVE AND BUILDING CODE ANALYSIS
MIA8LS101	AF212-220	LS101	LIFE SAFETY FLOOR PLAN
MIA8C-001	AF212-220	C-001	VICINITY MAP AND LOCATION PLAN
MIA8C-002	AF212-220	C-002	GENERAL CIVIL NOTES
MIA8V-101	AF212-220	V-101	EXISTING CONDITIONS PLAN
MIA8CD101	AF212-220	CD101	DEMOLITION PLAN
MIA8CS101	AF212-220	CS101	SITE PLAN
MIA8CG101	AF212-220	CG101	GRADING PLAN
MIA8CP101	AF212-220	CP101	PAVEMENT JOINTING AND ELEVATION PLAN
MIA8CU101	AF212-220	CU101	UTILITY PLAN
MIA8C-500	AF212-220	C-500	PAVEMENT DETAILS (SHEET 1 OF 2)
MIA8C-501	AF212-220	C-501	PAVEMENT DETAILS (SHEET 2 OF 2)
MIA8C-502	AF212-220	C-502	SITE AND UTILITY DETAILS
MIA8S-001	AF212-220	S-001	GENERAL NOTES - SHEET 1
MIA8S-002	AF212-220	S-002	GENERAL NOTES - SHEET 2
MIA8S-003	AF212-220	S-003	LEGEND & ABBREVIATIONS
MIA8S-004	AF212-220	S-004	STATEMENT OF SPECIAL INSPECTIONS
MIA8S-005	AF212-220	S-005	STATEMENT OF SPECIAL INSPECTIONS
MIA8S-101	AF212-220	S-101	SLAB AND FOUNDATION PLAN
MIA8S-102	AF212-220	S-102	ROOF FRAMING PLAN
MIA8S-201	AF212-220	S-201	ELEVATIONS
MIA8S-202	AF212-220	S-202	ELEVATIONS
MIA8S-301	AF212-220	S-301	STANDARD CONCRETE DETAILS
MIA8S-302	AF212-220	S-302	SLAB AND FOUNDATION DETAILS
MIA8S-303	AF212-220	S-303	CONCRETE DETAILS
MIA8S-304	AF212-220	S-304	STANDARD ROOF DECK & JOIST DETAILS
MIA8S-401	AF212-220	S-401	ROOF FRAMING DETAILS
MIA8S-402	AF212-220	S-402	ROOF FRAMING DETAILS
MIA8AG000	AF212-220	AG000	ARCHITECTURAL LEGEND, ABBREVIATIONS AND GENERAL NOTES
MIA8AD011	AF212-220	AD011	DEMOLITION PLAN - OVERALL
MIA8AD101	AF212-220	AD101	DEMOLITION PLAN - AREA A
MIA8A-011	AF212-220	A-011	FLOOR PLAN - OVERALL
MIA8A-101	AF212-220	A-101	FLOOR PLAN - AREA A
MIA8A-103	AF212-220	A-103	ROOF PLAN - AREA A
MIA8A-151	AF212-220	A-151	REFLECTED CEILING PLAN - AREA A
MIA8A-201	AF212-220	A-201	ENLARGED ELEVATIONS
MIA8A-301	AF212-220	A-301	BUILDING SECTIONS
MIA8A-331	AF212-220	A-331	WALL SECTIONS
MIA8A-401	AF212-220	A-401	DETAILS
MIA8A-501	AF212-220	A-501	PARTITION TYPES
MIA8A-521	AF212-220	A-521	PENETRATION DETAILS
MIA8A-522	AF212-220	A-522	PENETRATION DETAILS
MIA8A-601	AF212-220	A-601	SCHEDULES
MIA8A-602	AF212-220	A-602	DOOR DETAILS
MIA8A-603	AF212-220	A-603	DOOR DETAILS
MIA8A-701	AF212-220	A-701	SIGNAGE PLAN - AREA A
MIA8A-731	AF212-220	A-731	INTERIOR ELEVATIONS AND CASEWORK DETAILS

DESIGN FILE	DRAWING CODE	SHEET NO.	DESCRIPTION
MIA8FA001	AF212-220	FA001	FIRE ALARM SYMBOLS, LEGEND AND ABBREVIATIONS
MIA8FA101	AF212-220	FA101	FIRE ALARM AND MASS NOTIFICATION PLAN LAYOUT
MIA8FA601	AF212-220	FA601	FIRE ALARM RISER
MIA8FA602	AF212-220	FA602	FIRE ALARM MATRIX
MIA8FX001	AF212-220	FX001	FIRE SUPPRESSION NOTES, LEGEND AND ABBREVIATIONS
MIA8FX101	AF212-220	FX101	FIRE SUPPRESSION GROUND FLOOR PLAN
MIA8P-001	AF212-220	P-001	PLUMBING GENERAL NOTES, SYMBOLS, AND ABBREVIATIONS
MIA8PD101	AF212-220	PD101	DEMOLITION PLUMBING PLAN
MIA8P-101	AF212-220	P-101	PLUMBING DOMESTIC WATER & GASES PLAN
MIA8P-110	AF212-220	P-110	PLUMBING WASTE & VENT PLAN
MIA8P-500	AF212-220	P-500	PLUMBING DETAILS
MIA8P-601	AF212-220	P-601	PLUMBING SCHEDULES
MIA8P-701	AF212-220	P-701	PLUMBING RISER DIAGRAMS
MIA8M-001	AF212-220	M-001	MECHANICAL GENERAL NOTES, SYMBOLS, AND ABBREVIATIONS
MIA8MD101	AF212-220	MD101	DEMOLITION MECHANICAL HVAC PLAN
MIA8M-101	AF212-220	M-101	MECHANICAL HVAC PLAN
MIA8M-111	AF212-220	M-111	MECHANICAL PIPING PLAN
MIA8M-501	AF212-220	M-501	MECHANICAL DETAILS
MIA8M-502	AF212-220	M-502	MECHANICAL DETAILS
MIA8M-503	AF212-220	M-503	MECHANICAL DETAILS
MIA8M-504	AF212-220	M-504	MECHANICAL DETAILS
MIA8M-601	AF212-220	M-601	MECHANICAL SCHEDULES
MIA8M-701	AF212-220	M-701	MECHANICAL CONTOLS
MIA8M-702	AF212-220	M-702	MECHANICAL CONTOLS
MIA8M-703	AF212-220	M-703	MECHANICAL CONTOLS
MIA8M-704	AF212-220	M-704	MECHANICAL CONTOLS
MIA8M-705	AF212-220	M-705	MECHANICAL CONTOLS
MIA8M-706	AF212-220	M-706	MECHANICAL CONTOLS
MIA8E-001	AF212-220	E-001	ELECTRICAL SYMBOLS LEGEND - 1 OF 2
MIA8E-002	AF212-220	E-002	ELECTRICAL SYMBOLS LEGEND - 2 OF 2
MIA8ED101	AF212-220	ED101	DEMOLITION POWER AND COMMUNICATIONS PLAN
MIA8ED102	AF212-220	ED102	DEMOLITION GROUNDING AND LIGHTNING PROTECTION PLAN
MIA8ED111	AF212-220	ED111	DEMOLITION LIGHTING PLAN
MIA8ED701	AF212-220	ED701	DEMOLITION PANELBOARD SCHEDULE
MIA8E-101	AF212-220	E-101	POWER PLAN - AREA A
MIA8E-102	AF212-220	E-102	GROUNDING AND LIGHTNING PROTECTION PLAN
MIA8E-111	AF212-220	E-111	LIGHTING PLAN - AREA A
MIA8E-121	AF212-220	E-121	COMMUNICATIONS PLAN - AREA A
MIA8E-201	AF212-220	E-201	LIGHTNING PROTECTION ELEVATIONS
MIA8E-501	AF212-220	E-501	GROUNDING AND LIGHTNING PROTECTION DETAILS
MIA8E-502	AF212-220	E-502	GROUNDING AND LIGHTNING PROTECTION DETAILS
MIA8E-503	AF212-220	E-503	COMMUNICATION DETAILS
MIA8E-504	AF212-220	E-504	HAZARDOUS CLASSIFICATION DETAILS
MIA8E-601	AF212-220	E-601	ELECTRICAL RISER DIAGRAM
MIA8E-602	AF212-220	E-602	COMMUNICATION RISER DIAGRAM
MIA8E-701	AF212-220	E-701	ELECTRICAL SCHEDULES
MIA8E-702	AF212-220	E-702	ELECTRICAL PANELBOARD SCHEDULES

US ARMY CORPS OF ENGINEERS
OMAHA DISTRICT

SYM.	DATE	DESCRIPTION	APPR.	SYM.	DATE	DESCRIPTION	APPR.

U.S. ARMY ENGINEER DISTRICT
CORPS OF ENGINEERS
OMAHA, NEBRASKA

BURNS & McDONNELL
8201 NORMAN CENTER DR. #300
BLOOMINGTON, MN 55437
952-656-6003

DESIGNED BY: J.WEDERKOP
DRAWN BY: J.PICKA
SUBMITTED BY: -
FILE NAME: MIA8G-001
SIZE: 34X22
DATE: APRIL 2016
CONTRACT SOLICITATION NO.: W9128F-16-B-0007
CONTRACT NO.: -
FILE NUMBER: AF212-220
PLOT SCALE: AS INDICATED
PLOT DATE: 4/22/16
CHKD BY: P.RYAN

FY15 P-341 CONSTRUCT ADDITION B1134
MINOT AFB, NORTH DAKOTA
PN: QJVF143101

SHEET INDEX

SHEET IDENTIFICATION NUMBER
G-001

4/25/2016 10:40:42 AM
COPYRIGHT © 2016 BURNS & McDONNELL ENGINEERING COMPANY, INC.

1. CLASSIFICATION OF OCCUPANCY

BUILDING IDENTIFICATION	OCCUPANCY CLASSIFICATION (IBC 2012)	IBC
OFFICE AREA	BUSINESS GROUP B	304.1
MAINTENANCE/INDUSTRIAL AREA	INDUSTRIAL F-1	306.2
FUEL ROOM	HIGH HAZARD H-3	307.5

2. ACCESSORY OCCUPANCY (IBC 508.2)

FLOOR	FLOOR AREA (SF)	ACCESSORY	ACCESSORY AREA (SF)	PERCENTAGE OF AREA (SUM < 10%)	IBC AREA LIMITATION (SF)
LEVEL 1	35,434	H-3	1363	3%	3,497

3. OCCUPANCY SEPARATION

FLOOR / OCCUPANCY	SEPARATION	FLOOR / OCCUPANCY	SEPARATION RATING	IBC
LEVEL 1, H-3	SEPERATED	LEVEL 1, F-1	1 HR BARRIER	508.4.4
LEVEL 1, H-3	SEPERATED	LEVEL 1, B	1 HR BARRIER	508.4.4
LEVEL 1, F-1	SEPERATED	LEVEL 1, B	0 HR BARRIER	508.4.4

4. MODIFIED ALLOWABLE AREA (IBC 506)

OCCUPANCY	*ALLOWABLE AREA (SF)	FRONTAGE INCREASE (SF)	SPRINKLER INCREASE (SF)	MODIFIED ALLOWABLE AREA (SF)
*H-3	14,000	NOT PERMITED	NOT PERMITED	14,000
B	23,000	17,250	46,000	86,250
F-1	15,500	11,625	31,000	53,125

* ACCESSORY H SHALL NOT EXCEED THE TABULAR VALUES WITHOUT ANY INCREASES.

5. MODIFIED ALLOWABLE HEIGHT (IBC 504.2)

OCCUPANCY	*RESTRICTING ALLOWABLE HEIGHT (FT / STORY)	SPRINKLER INCREASE (FT / STORY)	MODIFIED ALLOWABLE HEIGHT (FT / STORY)
F-1	55 / 2	20 / 1	75 / 3
B	55 / 3	20 / 1	75 / 4

6. TYPE OF CONSTRUCTION (IBC 602)

BUILDING ELEMENT	TYPE OF CONSTRUCTION	FIRE RESISTANCE RATING
PRIMARY STRUCTURAL FRAME	IIB	0 HR **
BEARING EXTERIOR WALL	IIB	0 HR **
BEARING INTERIOR WALL	IIB	0 HR **
NON-BEARING EXTERIOR WALL	IIB	0 HR
NON-BEARING INTERIOR WALL	IIB	0 HR **
FLOOR CONSTRUCTION INCLUDING SUPPORTING BEAMS AND JOISTS	IIB	0 HR **
ROOF CONSTRUCTION INCLUDING SUPPORTING BEAMS AND JOISTS	IIB	0 HR

** EXCEPT AS REQUIRED FOR OCCUPANCY SEPARATION, INCIDENTAL USE, AND OTHER PASSIVE FIRE PROTECTION, SEE SECTION 9.7.3.

7. BUILDING SEPARATION (IBC TABLE 602)

BUILDING TYPES	FIRE SUPPRESSION DISTANCE (FT)	FIRE RESISTIVE RATING FO EXTERIOR WALL
B, F-1	>10	0 HOUR (ACTUAL SEPARATION 90 FEET)

8. PASSIVE FIRE PROTECTION

COMPONENT	REQUIRED RATING	CODE SECTION
CORRIDOR	0 HOUR	NFPA 101 38.3.6 AND 40.3.6

9. PASSIVE FIRE PROTECTION PENETRATION PROTECTION

COMPONENT	DOORS	DUCT PENETRATIONS	OTHER PENETRATIONS	CODE SECTION
1 HOUR FIRE BARRIER	3/4 HOUR	NOT REQUIRED	1 HOUR, INCLUDING TRANSFER OPENINGS	NFPA 90A 5.3.1.1
2 HOUR FIRE BARRIER	1-1/2 HOUR	1-1/2 HOUR DAMPER	2 HOUR, INCLUDING TRASNFER OPENINGS	NFPA 90A 5.3.1.1

10. MINIMUM INTERIOR FINISH RATINGS (NFPA 101 TABLE A.10.2.2)

OCCUPANCY	EXIT ENCLOSURE AND EXIT PASSAGEWAYS	CORRIDORS	OTHER SPACES
BUSINESS	CLASS B	CLASS C	CLASS C
INDUSTRIAL	CLASS C	CLASS C	CLASS C
HIGH HAZARD	CLASS B	CLASS B	CLASS C

11. OCCUPANT LOAD CALCULATIONS (NFPA 101 TABLE 7.3.1.2)

FLOOR	AREA	FUNCTION OF SPACE	AREA (SF)	OCCUPANT LOAD FACTOR (SF/PERSON)	OCCUPANTS
LEVEL 1	BREAK ROOM	ASSEMBLY AREAS	626	15	42
LEVEL 1	OFFICES, BATHROOMS	BUSINESS AREAS	7102	100	72
LEVLE 1	INDUSTRIAL AREA	INDUSTRIAL AREAS	27,705	100	278
			35434	TOTAL BUILDING	392

12. OCCUPANT LOAD SUMMARY AND MINIMUM EXITS FROM FLOOR (NFPA 101)

FLOOR	OCCUPANTS	REQUIRED EXITS (NFPA 101)	REQUIRED EXIT SEPARATION (NFPA 101)
LEVEL 1	392	*2 (7.4.1.2)	1/3 DIAGONAL

* DUE TO LAYOUT OF THE FACILITY MORE THAN THE ABOVE MINIMUM EXITS ARE REQUIRED.

13. MINIMUM EXITS OR EXIT ACCESSES FROM A SPACE OR AREA (NFPA 101)

OCCUPANCY	OCCUPANT LOAD PERMITTING ONE EXIT	OCCUPANT LOAD REQUIRING TWO EXITS	NFPA 101 SECTION
BUSINESS	LESS THAN COMMON PATH	GREATER THAN COMMON PATH	38.2.4
INDUSTRIAL	LESS THAN COMMON PATH	GREATER THAN COMMON PATH	40.2.4
HIGH HAZARD	EXCEPTIONS 1-3 (7.11.4)	ALL CONDITIONS	7.11.4

14. COMMON PATH, DEAD-END, AND TRAVEL DISTANCE LIMITS (NFPA 101, TABLE 7.6)

OCCUPANCY	COMMON PATH LIMIT (FT)	DEAD END LIMIT (FT)	TRAVEL DISTANCE LIMIT (FT)
INDUSTRIAL	100	50	400
BUSINESS	100	50	300
HIGH HAZARD	0	0	75

15. MINIMUM EGRESS WIDTHS (NFPA 101, 7.2 & 7.3)

COMPONENT	REQUIREMENT	WIDTH (IN)	NFPA 101
CORRIDOR SERVING 50 OR MORE OCCUPANTS	PER COMPONENT	44	7.3.4.1
DOORS IN EGRESS ACCESS	PER COMPONENT	32	7.2.1.2.3.2
LEVEL COMPONENTS	PER PERSON	0.2	7.2.2.2.1.2

16. EMERGENCY LIGHTING AND EXITING

OCCUPANCY	EMERGENCY LIGHTING	EXIT SIGNAGE
INDUSTRIAL	REQUIRED (NFPA 101 40.2.9.1)	REQUIRED (NFPA 101 40.2.9)
BUSINESS	REQUIRED (NFPA 101 38.2.9.1)	REQUIRED (NFPA 101 38.2.9)
HIGH HAZARD	REQUIRED (NFPA 101 40.2.9.1)	REQUIRED (NFPA 101 40.2.9)

17. FIRE SUPPRESSION REQUIREMENTS (UFC 3-600-01)

SPRINKLERS (UFC 3-300-01 4-2.2)	STANDPIPE (UFC 3-600-01 4-2.3.8)	FIRE EXTINGUISHERS (UFC 3-600-01 4.9)
SPRINKLERS PROVIDED THROUGHOUT THE BUILDING	NOT REQUIRED	FIRE EXTINGUISHERS PROVIDED THROUGHOUT THE BUILDING

18. FIRE ALARM REQUIREMENTS (UFC 3-600-01)

AUTOMATIC INITIATION	OCCUPANT INITIATION	MANUAL INITIATION
SPRINKLER FLOW SWITCHES	VOICE MESSAGING	MANUAL FIRE ALARM PULL STATIONS AT EXITS
SPOT SMOKE DETECTORS AT ALARM PANELS	WHITE FIRE ALARM	
DUCT SMOKE DETECTORS		

19. FIRE EXTINGUISHER DISTRIBUTION (NFPA 10 TABLE 6.2.1.1)

OCCUPANCY	PRIMARY CLASSIFICATION OF FIRE AND HAZARD	MINIMUM RATING	MAXIMUM TRAVEL DISTANCE (FT)	MINIMUM FLOOR AREA PER A (SF)
BUSINESS/INDUSTRIAL	CLASS A:C - ORDINARY	2-A	75	1,500
HIGH HAZARD	CLASS B - EXTRA HAZARD	40-B	30	N/A

20. FIRE HYDRANT DISTRIBUTION

DISTANCE TO BUILDING (FT)	DISTANCE TO FDC (FT)	FIRE TRUCK ACCESS (FT)
300	150	33

21. SMOKE MANAGEMENT SYSTEMS

SMOKE CONTROL SYSTEM (NFPA 101)	SMOKE AND HEAT VENTS (NFPA 101)	PASSIVE SMOKE MANAGEMENT
NOT REQUIRED	NOT REQUIRED	NOT REQUIRED

US ARMY CORPS OF ENGINEERS
OMAHA DISTRICT

SYM.	DATE	DESCRIPTION	SYM.	DATE	DESCRIPTION	APPR.

DESIGNED BY: J. DEE
DWN BY: HANKINS
CKD BY: C. CAHILL
SUBMITTED BY: -
DATE: APRIL 2016
SOLICITATION NO.: W912SF-16-B-0007
CONTRACT NO.: -
FILE NAME: MI4BLS001
FILE NUMBER: AF212-220
SIZE: 34X22
PLOT SCALE: AS INDICATED
PLOT DATE: 4/22/16

U.S. ARMY ENGINEER DISTRICT
CORPS OF ENGINEERS
OMAHA, NEBRASKA

BURNS & McDONNELL
8201 NORMAN CENTER DR. #300
BLOOMINGTON, MN 55437
952-656-6003

FY15P-341 CONSTRUCT ADDITION B1134
MINOT AFB, NORTH DAKOTA
PN: QJVF143101

LIFE SAFETY NARRATIVE AND BUILDING CODE ANALYSIS

SHEET IDENTIFICATION NUMBER
LS001

4/21/2016 1:33:51 PM
COPYRIGHT © 2016 BURNS & McDONNELL ENGINEERING COMPANY, INC.

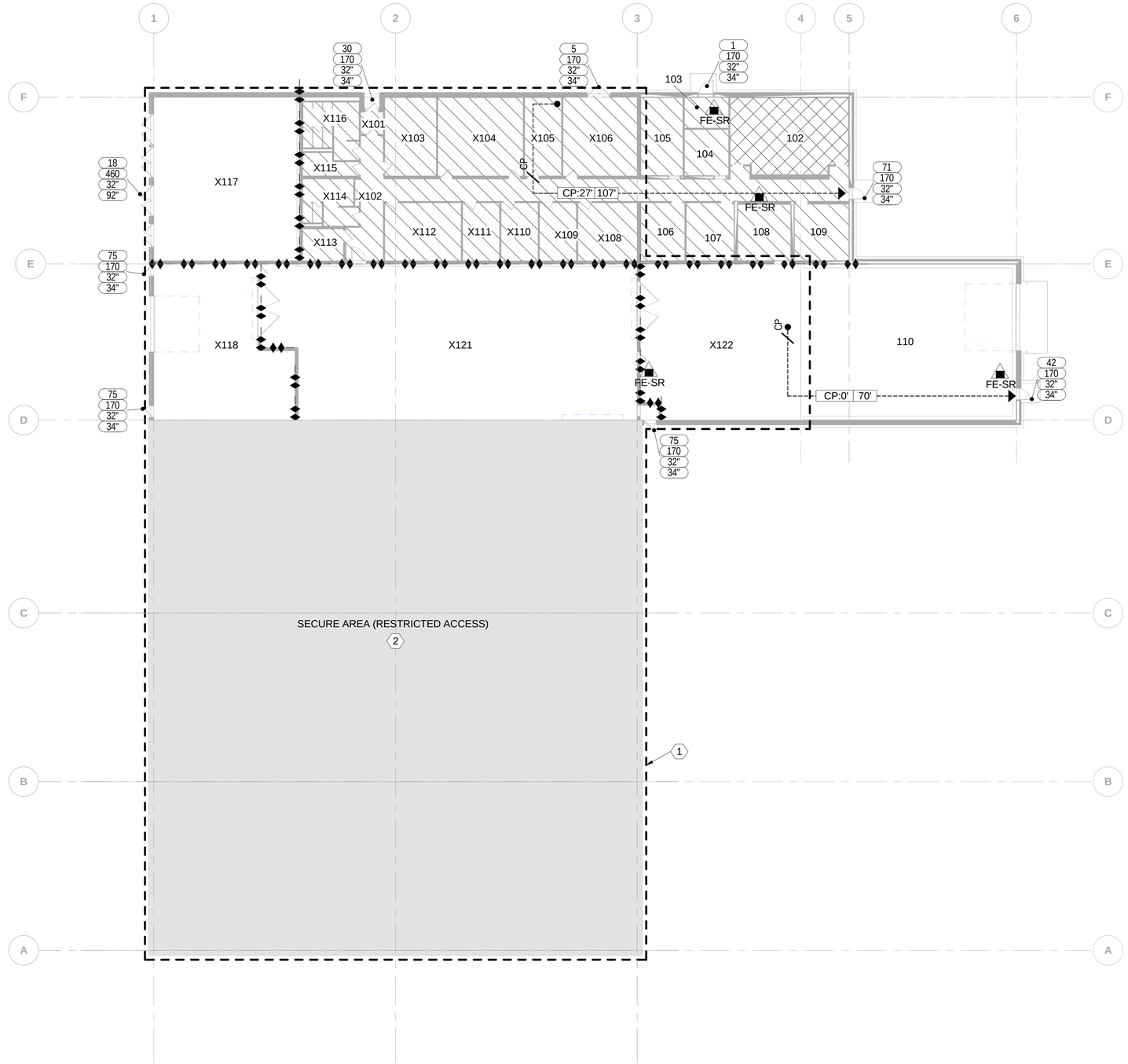

LIFE SAFETY FLOOR PLAN 1 LS101

0 8' 16' 32'
SCALE IN FEET

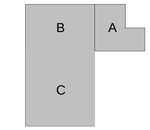

KEYPLAN

GENERAL NOTES:

1. REFER TO ARCHITECTURAL LEGEND FOR ADDITIONAL INFORMATION REGARDING SYMBOLS AND ABBREVIATIONS.
2. REFER TO LS001 FOR LIFE SAFETY NARRATIVE AND BUILDING CODE ANALYSIS.
3. REFER TO THE ELECTRICAL LIGHTING PLANS FOR LOCATION OF EXIT SIGNS AND EMERGENCY LIGHTING.
4. REFER TO THE FIRE SUPPRESSION AND ALARM PLANS FOR LOCATION OF FIRE PROTECTION DEVICES.
5. FINAL LOCATIONS OF FIRE EXTINGUISHERS AND HOSE REELS SHALL BE APPROVED BY THE AHJ PRIOR TO INSTALLATION.

KEYED NOTES:

1. EXISTING CONSTRUCTION TYPE, RATING, AND FIRE EXTINGUISHER LOCATIONS TO REMAIN UNCHANGED IN EXISTING BUILDING.
2. RESTRICTED AREA SHALL REMAIN UNCHANGED AND UNAFFECTED BY THE ADDITION. FOR SECURITY PURPOSES, EGRESS DOORS WITHIN THIS AREA ARE NOT SHOWN.

OCCUPANT LOAD LEGEND

	INDUSTRIAL	1 PERSON / 100 SF GROSS
	BUSINESS AREAS	1 PERSON / 100 SF GROSS
	ASSEMBLY AREAS	1 PERSON / 15 SF GROSS

EGRESS PATH

CP:25' 50' — CP — EGRESS PATH

TRAVEL DISTANCE — COMMON PATH TERMINATION POINT — EXIT DOOR

COMMON PATH OF TRAVEL

DOOR EGRESS TAG

78 — OCCUPANTS SERVED
180 — EXIT CAPACITY
32" — REQUIRED WIDTH
36" — PROVIDED WIDTH

FIRE AND SMOKE RESISTIVE CONSTRUCTION

2 HOUR FIRE BARRIER

PORTABLE FIRE EXTINGUISHERS

FE-SR — PORTABLE FIRE EXTINGUISHER 4A-20B:C

US ARMY CORPS OF ENGINEERS
OMAHA DISTRICT

SYM.	DATE	DESCRIPTION	APPR.	SYM.	DATE	DESCRIPTION	APPR.

DESIGNED BY: J. DEW
DWN BY: HANKINS
CKD BY: C. CAHILL
SUBMITTED BY: -
FILE NAME: MIA8LS101
SIZE: 34X22
PLOT SCALE: AS INDICATED
DATE: APRIL 2016
SOLICITATION NO.: W9128F-16-B-0007
CONTRACT NO.: -
FILE NUMBER: AF212-220
PLOT DATE: 4/22/16

U.S. ARMY ENGINEER DISTRICT
CORPS OF ENGINEERS
OMAHA, NEBRASKA

BURNS & MCDONNELL
8201 NORMAN CENTER DR. #300
BLOOMINGTON, MN 55437
952-656-6003

FY15P-341 CONSTRUCT ADDITION B1134
MINOT AFB, NORTH DAKOTA
PN: QJVF143101

LIFE SAFETY FLOOR PLAN

SHEET IDENTIFICATION NUMBER
LS101

4/21/2016 1:33:52 PM
COPYRIGHT © 2016 BURNS & McDONNELL ENGINEERING COMPANY, INC.

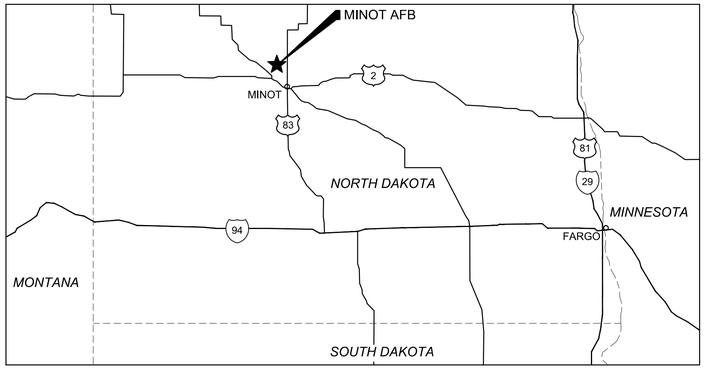

C1 VICINITY MAP

SCALE:NTS

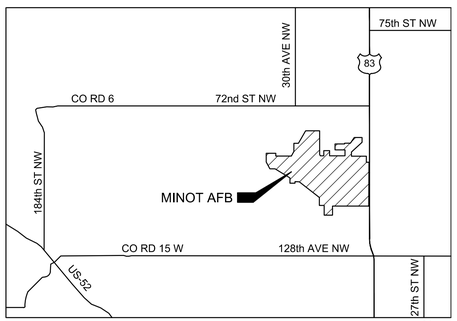

B1 LOCATION MAP

SCALE:1" = APPROX 2 MI

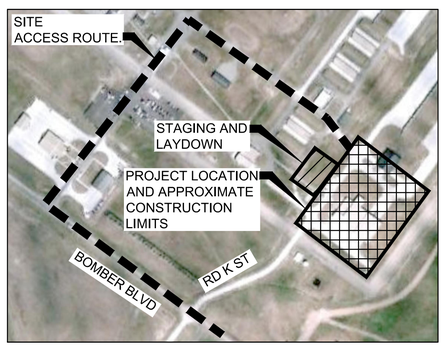

ENLARGEMENT PLAN

B2 MINOT AFB OVERALL

0 1000' 2000'

SCALE:1"=1000'

ACCESS AND SAFETY NOTES

ACCESS AND STAGING

1. ACCESS AND HAUL ROUTES FOR ALL CONTRACTOR PERSONNEL, VEHICLES, EQUIPMENT, AND DELIVERIES ARE ILLUSTRATED ON THIS SHEET AND ARE SUBJECT TO THE APPROVAL OF THE CONTRACTING OFFICER. IT SHALL BE THE CONTRACTOR'S RESPONSIBILITY TO COORDINATE OFF-SITE HAUL ROUTES WITH THE APPROPRIATE OWNER WHO HAS JURISDICTION OVER THE AFFECTED ROUTE. ACCESS ROUTES AND HAUL ROUTES ARE SUBJECT TO CHANGE AT THE DIRECTION OF THE CONTRACTING OFFICER AND MAY CHANGE BASED ON OPERATIONAL REQUIREMENTS OF THE PROJECT BASE.

2. THE SITE SHALL HAVE ROADS AND ACCESS DRIVES OF SUFFICIENT WIDTH AND LENGTH TO PREVENT SEDIMENT FROM TRACKING ONTO PUBLIC ROADWAYS. SEDIMENT SHALL BE REMOVED IMMEDIATELY FROM THE ROAD BY SHOVELING OR SWEEPING WHEN SEDIMENT IS TRANSPORTED ONTO A PUBLIC ROAD SURFACE OR OTHER PAVED AREA BY EQUIPMENT OR VEHICLES EXITING THE CONSTRUCTION SITE. BULK CLEARING OF ACCUMULATED SEDIMENT SHALL BE TRANSPORTED TO A CONTROLLED SEDIMENT DISPOSAL AREA OR THE POINT OF LIKELY ORIGIN BEFORE THE END OF EACH WORK DAY. ROAD WASHING SHALL BE ALLOWED ONLY AFTER THE SEDIMENT IS REMOVED IN THE ABOVE MANNER. CONTRACTOR SHALL MAINTAIN ACCESS AND HAUL ROUTES TO BE FREE FROM DEBRIS CAUSED FROM CONSTRUCTION ACTIVITIES ON A DAILY BASIS.

3. CONTRACTOR SHALL COORDINATE ACTIVITIES AND MAINTAIN ALL ACCESS AND HAUL ROUTES IN A MANNER THAT ALLOWS UNOBSTRUCTED EMERGENCY ACCESS TO ALL PROJECT AREAS, AND EXISTING ROADWAYS AT ALL TIMES WITHOUT DELAY TO EMERGENCY AND SECURITY VEHICLE RESPONSE TIME.

4. IF ANY EMERGENCY ROUTES REQUIRE CLOSURE DUE TO CONSTRUCTION ACTIVITIES, CONTRACTOR SHALL NOTIFY THE CONTRACTING OFFICER, POLICE, LOCAL FIRE AUTHORITY, AND ALL OTHER EMERGENCY SERVICES OF THE CLOSURE.

5. ALL CONTRACTOR VEHICLES AND PERSONNEL ARE SUBJECT TO SEARCH BY SECURITY WHEN ENTERING THE BASE AND MAY EXPERIENCE DELAYS. ALL PERSONNEL MUST HAVE A CURRENT AND VALID PHOTO IDENTIFICATION PER BASE SECURITY REQUIREMENTS, AND ALL VEHICLES MUST HAVE CURRENT AND VALID REGISTRATION AND INSURANCE.

6. ALL CONTRACTOR VEHICLES AND PERSONNEL SHALL BE RESPONSIBLE FOR COORDINATING WITH THE BASE SECURITY OFFICE IN OBTAINING PROPER SECURITY CLEARANCE AND BADGING PRIOR TO ENTERING SECURE AREAS.

7. CONTRACTOR SHALL RESTRICT ALL OPERATIONS TO AREAS WITHIN THE CONSTRUCTION LIMITS UNLESS COORDINATED OTHERWISE WITH THE CONTRACTING OFFICER.

8. CONTRACTOR SHALL PROVIDE TEMPORARY CONSTRUCTION FENCING AROUND THE ENTIRE SITE AND STAGING AREA DURING CONSTRUCTION. EXACT LOCATION TO BE AT THE DIRECTION OF THE CONTRACTING OFFICER.

9. CONTRACTOR IS RESPONSIBLE FOR ESTABLISHING A STAGING AND STOCKPILE AREA FOR MATERIALS AND EQUIPMENT. LOCATION OF CONTRACTOR'S STAGING SHALL BE AS ILLUSTRATED ON THIS DRAWING AND IS SUBJECT TO THE APPROVAL OF THE CONTRACTING OFFICER. CONTRACTOR MAY SUBMIT ALTERNATIVES TO THE STAGING AREA LOCATIONS AS SHOWN. CONTRACTOR'S STAGING AREA IS SUBJECT TO CHANGE AT THE DIRECTION OF THE CONTRACTING OFFICER AND MAY CHANGE BASED ON OPERATIONAL REQUIREMENTS OF THE PROJECT SITE.

10. WHEN NOT ENGAGED IN CONSTRUCTION ACTIVITIES, CONTRACTOR'S EQUIPMENT AND VEHICLES SHALL BE PARKED IN A STAGING AREA.

11. CONTRACTOR SHALL PROVIDE AND INSTALL AT THE CONSTRUCTION ENTRANCE A PROFESSIONALLY PAINTED SIGN, MEETING CONTRACTING OFFICER APPROVAL, TO DIRECT MATERIAL SUPPLIERS, EMPLOYEES, AND DELIVERIES TO THE CONSTRUCTION SITE. THE SIGN SHALL READ "CONSTRUCTION VEHICLES ONLY - NO VENDORS ALLOWED." FINAL LOCATION SHALL BE COORDINATED WITH CONTRACTING OFFICER.

12. CONTRACTOR SHALL PROVIDE A MINIMUM NOTICE OF 48 HOURS TO THE CONTRACTING OFFICER REGARDING CONSTRUCTION DELIVERIES PRIOR TO THOSE DELIVERIES. DELIVERIES SHALL BE SCHEDULED MONDAY-FRIDAY, 8:00 AM TO 3:00 PM.

13. ACCESS POINTS, HAUL ROUTES, STAGING AREA, AND ANY OTHER AREAS DISTURBED BY THE CONTRACTOR SHALL BE RESTORED TO THEIR ORIGINAL CONDITION OR BETTER TO THE SATISFACTION OF THE CONTRACTING OFFICER.

COORDINATION AND COMMUNICATION

1. CONTRACTOR SHALL APPOINT A PRIMARY CONSTRUCTION SUPERINTENDENT, SUBJECT TO THE APPROVAL OF THE CONTRACTING OFFICER, WHO SHALL BE PRESENT ON THE CONSTRUCTION SITE AT ALL TIMES DURING WORKING HOURS AND ACCESSIBLE AT ALL TIMES WHILE WORK IS IN PROGRESS. THE PRIMARY CONSTRUCTION SUPERINTENDENT SHALL BE DESIGNATED THE RESPONSIBLE CONTRACTOR'S REPRESENTATIVE WHO SHALL BE AVAILABLE ON A 24-HOUR BASIS. WHEN THE CONTRACTOR'S PRIMARY CONSTRUCTION REPRESENTATIVE IS NOT AVAILABLE ON THE CONSTRUCTION SITE, AN ALTERNATE REPRESENTATIVE SHALL BE PROVIDED. CONTRACTOR SHALL PROVIDE NAMES AND CONTACT INFORMATION OF REPRESENTATIVES TO THE CONTRACTING OFFICER PRIOR TO THE START OF CONSTRUCTION ACTIVITIES.

2. CONTRACTOR SHALL BE RESPONSIBLE FOR MAINTAINING CONSTANT COORDINATION BETWEEN ANY SUBCONTRACTORS AND THE CONTRACTING OFFICER. ALL CONSTRUCTION ACTIVITIES PLANNED BY THE CONTRACTOR SHALL BE REVIEWED AND APPROVED BY THE CONTRACTING OFFICER.

3. THE FOLLOWING CONTACT INFORMATION IS PROVIDED FOR CONTRACTOR'S USE IN CASE OF AN EMERGENCY:

   a. USE 911 IN CASE OF EMERGENCY.
   b. ADDITIONAL CONTACTS TO BE PROVIDED AT PRE-CONSTRUCTION MEETING.

COPYRIGHT © 2016 BURNS & McDONNELL ENGINEERING COMPANY, INC.

US ARMY CORPS OF ENGINEERS
OMAHA DISTRICT

SYM.	DESCRIPTION	DATE	APPR.	SYM.	DESCRIPTION	DATE	APPR.

DESIGNED BY: A. PARTLOW
DWN BY: K. HOONE
CKD BY: K.JENSEN
SUBMITTED BY: -
DATE: APRIL 2016
SOLICITATION NO.: W912BF-16-B-0007
CONTRACT NO.: -
FILE NAME: M9A5C-001
FILE NUMBER: AF212-220
SIZE: 34X22
PLOT SCALE: AS INDICATED
PLOT DATE: 4/22/2016

U.S. ARMY ENGINEER DISTRICT
CORPS OF ENGINEERS
OMAHA, NEBRASKA

BURNS & McDONNELL
8201 NORMAN CENTER DR. #300
BLOOMINGTON, MN 55437
952-656-8003

FY15 P-341 CONSTRUCT ADDITION B1134
MINOT AFB, NORTH DAKOTA
PN: QJVF143101

VICINITY MAP AND LOCATION PLAN

SHEET IDENTIFICATION NUMBER
C-001

GENERAL NOTES:

1. SEE SHEET V-101 FOR HORIZONTAL AND VERTICAL CONTROL BENCHMARK INFORMATION.
2. ALL DIMENSIONS, ELEVATIONS, AND STATIONS ARE IN FEET, UNLESS INDICATED OTHERWISE.
3. CALLOUTS, COORDINATES, AND DIMENSIONS ARE POINTED TO OR MEASURED TO STRUCTURE CENTER, EDGE OF PAVEMENT, OR OUTSIDE FACE OF FOUNDATION WALL, UNLESS INDICATED OTHERWISE.
4. ALL WORK SHALL BE SUBJECT TO INSPECTION BY AUTHORIZED PERSONNEL OF LOCAL AND GOVERNMENT REGULATORY AGENCIES AND THE CONTRACTING OFFICER.
5. ALL WORK SHALL BE CONDUCTED IN ACCORDANCE WITH THE PLANS AND SPECIFICATIONS AND LOCAL AND GOVERNMENT CODES, ORDINANCES, AND REGULATIONS. IN CASE OF CONTRADICTION OR DISCREPANCY BETWEEN REQUIREMENTS, CONTRACTOR SHALL INCORPORATE WHICHEVER IS MOST STRINGENT. WHERE A QUESTION REMAINS ON WHICH REQUIREMENT IS MOST STRINGENT, CONTRACTOR SHALL SUBMIT ISSUE TO THE CONTRACTING OFFICER IN WRITING. THE DECISION OF THE CONTRACTING OFFICER SHALL BE CONSIDERED FINAL.
6. ALL WORK SHALL BE CONDUCTED IN A PROFESSIONAL WORKMANSHIP MANNER USING QUALITY MATERIALS.

PHASING NOTES:

1. CONTRACTOR SHALL PROVIDE A PHASING PLAN IDENTIFYING HOW SECURITY AND PERIMETER FENCE WILL BE MAINTAINED. PHASING PLAN SHALL REQUIRE CONTRACTING OFFICER APPROVAL.

RECORD DRAWING NOTES:

1. CONTRACTOR SHALL MAINTAIN UPDATED RECORD DRAWINGS AT ALL TIMES THROUGHOUT THE DURATION OF THE PROJECT. CONSTRUCTION RECORD DRAWINGS SHALL BE SUBMITTED TO THE CONTRACTING OFFICER.
2. DURING CONSTRUCTION OF THE PROJECT, CONTRACTOR SHALL BE RESPONSIBLE FOR KEEPING TRACK OF ANY CONTRACTING OFFICER-APPROVED FIELD CONSTRUCTION REVISIONS TO THE DESIGN DEPICTED ON APPROVED CONSTRUCTION DRAWINGS. THESE REVISIONS SHALL BE USED TO PREPARE RECORD DRAWINGS OF COMPLETED CONSTRUCTION.
3. ALL VARIATIONS IN PROJECT CONDITIONS, LOCATIONS, AND CONFIGURATIONS, AND ANY OTHER CHANGES OR DEVIATIONS FROM THE INFORMATION PRESENTED ON THE ORIGINAL, APPROVED CONSTRUCTION DRAWINGS SHALL BE NOTED. THIS INCLUDES BURIED OR CONCEALED CONSTRUCTION AND UTILITY FEATURES THAT WERE REVEALED DURING CONSTRUCTION.
4. THE CONTRACTING OFFICER SHALL REVIEW COMPLETENESS, ACCURACY, AND FORMAT OF SUBMITTED RECORD DRAWINGS. IF THE RECORD DRAWINGS ARE CONSIDERED UNACCEPTABLE, THEY SHALL BE RETURNED TO THE CONTRACTOR FOR CORRECTION AND RESUBMISSION.

EXCAVATION AND TRENCHES:

1. CONTRACTOR SHALL COMPLY WITH THE MOST CURRENT EDITION OF OCCUPATIONAL HEALTH AND SAFETY ADMINISTRATION (OSHA) REGULATIONS AND THE STATE OF NORTH DAKOTA LAWS CONCERNING EXCAVATION.
2. OPEN TRENCHES AND EXCAVATIONS AT THE CONSTRUCTION SITE SHALL BE PROMINENTLY MARKED WITH ORANGE BARRICADES WITH FLASHING RED LIGHTS ACCEPTABLE TO THE CONTRACTING OFFICER.
3. CONTRACTOR SHALL PROVIDE A MINIMUM NOTICE OF 48 HOURS TO THE CONTRACTING OFFICER AND ASSOCIATED UTILITY COMPANIES AND AGENCIES BEFORE PROCEEDING WITH ANY EXCAVATION.
4. DEWATERING OF UTILITY TRENCHES AND OTHER EXCAVATIONS MAY BE REQUIRED.
5. OPEN ONLY THOSE TRENCHES FOR WHICH MATERIAL IS ON-HAND AND READY FOR PLACING THEREIN. AS SOON AS POSSIBLE AFTER THE MATERIAL HAS BEEN PLACED AND WORK APPROVED, BACKFILL AND COMPACT TRENCHES AS SPECIFIED.

EROSION AND SEDIMENT CONTROL NOTES:

BEST MANAGEMENT PRACTICES

1. CONSTRUCTION ACTIVITY POLLUTION PREVENTION IS REQUIRED FOR THIS PROJECT. PREVENTION OF POLLUTION RESULTING FROM CONSTRUCTION ACTIVITIES SHALL BE ACCOMPLISHED BY CONTROLLING SOIL EROSION, WATERWAY SEDIMENTATION, AND AIRBORNE DUST GENERATION. CONTRACTOR SHALL ENSURE THAT NO SEDIMENT RESULTING FROM CONSTRUCTION ACTIVITIES INFRINGES ONTO ADJACENT PROPERTIES. CONTRACTOR SHALL COORDINATE EROSION AND SEDIMENT CONTROL WITH OTHER CONSTRUCTION ENTITIES PERFORMING WORK ON ADJACENT PROPERTIES.
2. SOIL EROSION AND SEDIMENT CONTROLS ARE MEASURES USED TO REDUCE THE AMOUNT OF SOIL PARTICLES THAT ARE CARRIED OFF AN AREA AND DEPOSITED INTO A DRAINAGE COLLECTION SYSTEM OR INTO A BODY OF WATER. THE CONTRACTOR SHALL BE RESPONSIBLE FOR ENSURING THAT EROSION AND SEDIMENTATION ARE CONTROLLED TO THE EXTENT PRACTICABLE. ALL APPLICABLE SOIL EROSION AND SEDIMENT CONTROL MEASURES SHALL BE IMPLEMENTED AND MAINTAINED THROUGHOUT THE DURATION OF CONSTRUCTION ACTIVITIES. PRIOR TO INITIATING CONSTRUCTION IN AN AREA, ALL TEMPORARY EROSION AND SEDIMENT CONTROL PRACTICES SHALL BE IN PLACE. UPON PROJECT COMPLETION ALL TEMPORARY SOIL EROSION AND SEDIMENT CONTROL MEASURES SHALL BE REMOVED.
3. TEMPORARY EROSION CONTROL SHALL BE THE CONTRACTOR'S RESPONSIBILITY, WHO SHALL UTILIZE APPROPRIATE BEST MANAGEMENT PRACTICES (BMPS). THOSE BMPS SHALL CONSIST OF SILT FENCE, WATTLES OR OTHER MEANS TO CONTROL EROSION.
4. CONTRACTOR SHALL PLACE SILT FENCE AS SHOWN ON CG101 PRIOR TO BEGINNING WORK. THE DEVICES SHALL BE PLACED DOWN-SLOPE OF DISTURBED AREAS WHERE SHEET EROSION WOULD OCCUR. SILT FENCE SHALL BE CLEANED AND REPAIRED WHEN SEDIMENT BUILDUP REACHES ONE-THIRD OF SILT FENCE HEIGHT. AFTER SIGNIFICANT RUNOFF EVENTS, THE CONTRACTOR SHALL INSPECT ALL EROSION CONTROL STRUCTURES FOR SILT BUILD-UP THAT INTERFERES WITH THE PERFORMANCE OF THE EROSION CONTROL STRUCTURE AND REPAIR OR REPLACE THOSE STRUCTURES, AS NECESSARY.
5. ALL STORM DRAIN INLETS SHALL BE PROTECTED BY APPROPRIATE BMPS DURING CONSTRUCTION, UNTIL ALL SOURCES WITH POTENTIAL FOR DISCHARGE TO THE INLETS HAVE BEEN STABILIZED.
6. ALL EXISTING DRAIN INLETS SHALL HAVE SILT FENCE PROTECTION INSTALLED. EROSION PROTECTION MAY BE REMOVED WHEN VEGETATION IS 70 PERCENT OR GREATER COVERAGE.
7. ROCK CHECK DAMS MAY BE PLACED IN DRAINAGE SWALES TO LIMIT THE AMOUNT OF SEDIMENT THAT TRAVELS DOWNSTREAM. THIS DEVICE MUST BE MAINTAINED TO REMAIN EFFECTIVE.

FINAL GRADING AND CLEAN UP

AFTER COMPLETION OF FINAL GRADING, THE DISTURBED AREAS SHALL BE REVEGETATED. ALL TEMPORARY EROSION AND SEDIMENT CONTROL DEVICES SHALL BE REMOVED UPON PROJECT COMPLETION. TRAPPED SEDIMENT AND OTHER DISTURBED SOIL AREAS RESULTING FROM THE DISPOSITION OF TEMPORARY CONTROL MEASURES SHALL BE PERMANENTLY STABILIZED TO PREVENT FURTHER EROSION AND SEDIMENTATION.

PETROLEUM PRODUCTS

ALL ON-SITE VEHICLES SHALL BE MONITORED FOR PETROLEUM LEAKS AND SHALL RECEIVE PROPER PREVENTATIVE MAINTENANCE TO REDUCE THE CHANCE OF LEAKAGE. PETROLEUM PRODUCTS SHALL BE STORED IN TIGHTLY-SEALED CONTAINERS THAT ARE CLEARLY LABELED. ALL SPILLS SHALL BE CLEANED UP IMMEDIATELY AFTER DISCOVERY. WASTE OIL AND OTHER PETROLEUM PRODUCTS SHALL NOT BE DISCHARGED ONTO THE GROUND OR INTO WATER BODIES. PETROLEUM PRODUCTS USED ON-SITE SHALL BE APPLIED ACCORDING TO THE MANUFACTURER RECOMMENDATIONS.

STORM WATER PERMIT

CONTRACTOR IS RESPONSIBLE FOR OBTAINING A STORM WATER PERMIT FOR LAND DISTURBANCE OF MORE THAN 1 ACRE PRIOR TO CONSTRUCTION. CONTRACTOR IS RESPONSIBLE FOR COORDINATING WITH LOCAL AUTHORITIES TO COMPLETE AND SUBMIT THE STORM WATER POLLUTION PREVENTION PLAN (SWPPP) FOR APPROVAL.

1. CONTRACTOR SHALL OBTAIN ALL NECESSARY NATIONAL POLLUTANT DISCHARGE ELIMINATION SYSTEM (NPDES) PERMITS AND SHALL MAINTAIN SAID PERMITS AS REQUIRED BY THE REGULATORY AGENCY. ANY OFF-SITE HAUL/BORROW SITE SHALL BE INCLUDED IN THE NPDES PERMIT.
2. CONTRACTOR SHALL BE RESPONSIBLE FOR ALL FEES, NOTIFICATION, MAINTENANCE, MONITORING, AND RECORD KEEPING REQUIRED BY THE NPDES GENERAL PERMIT.

EROSION CONTROL MAINTENANCE SCHEDULE:

THE FOLLOWING EROSION CONTROL FEATURES MAINTENANCE SCHEDULE HAS BEEN PROVIDED. THE CONTRACTING OFFICER SHALL PERFORM THE INSPECTIONS ONCE EVERY 7 DAYS AND WITHIN 24 HOURS OF A 0.5" RAIN EVENT. THE CONTRACTOR SHALL ALSO PERFORM ALL NEEDED MAINTENANCE. FURTHERMORE, ALL EROSION CONTROL FEATURES REQUIRING MAINTENANCE MAY NOT BE LISTED BELOW. THE CONTRACTOR AND CONTRACTING OFFICER MUST PERFORM THEIR RESPECTIVE DUTIES ON ALL INSTALLED EROSION CONTROL FEATURES.

1. SILT FENCE: SILT FENCE SHOULD BE INSPECTED WEEKLY AND AFTER MAJOR RAIN EVENTS TO ENSURE THAT THE DEVICE IS FUNCTIONING PROPERLY. REMOVE SEDIMENT FROM BEHIND THE FENCE WHEN DEPTH OF SEDIMENT HAS BUILT UP TO 50 PERCENT THE HEIGHT OF THE FENCE ABOVE GRADE. INSPECT THE BASE OF THE FENCE TO ENSURE THAT NO GAPS HAVE DEVELOPED AND RETRENCH AS NECESSARY. INSPECT FENCE POSTS TO ENSURE THAT THEY ARE PROPERLY SUPPORTING THE FENCE. STRAIGHTEN, RESET AND ADD POSTS IF NECESSARY. IF FILTER FABRIC IS RIPPED, DAMAGED, OR DETERIORATED, REPLACE IT IN ACCORDANCE WITH THE ORIGINAL SPECIFICATIONS AND DETAILS.

OTHER SAFETY REQUIREMENTS:

1. CONTRACTOR SHALL MAINTAIN SAFETY PRACTICES THAT CONFORM TO OCCUPATIONAL SAFETY AND HEALTH ADMINISTRATION (OSHA) REGULATIONS.
2. IT IS THE RESPONSIBILITY OF THE CONTRACTOR TO OBTAIN AND PAY FOR ALL APPLICABLE PERMITS, FEES AND LICENSES FOR CONSTRUCTION AND EQUIPMENT.
3. THE CONTRACTOR SHALL PERFORM ON-SITE INSPECTIONS THROUGHOUT THE PROJECT AND REMEDY ANY SAFETY CONCERNS IMMEDIATELY.
4. THERE SHALL BE NO PERMANENT WASTE SITES ON BASE PROPERTY. ANY TEMPORARY WASTE AREA SHALL BE APPROVED BY THE CONTRACTING OFFICER AND SHALL BE KEPT IN AN ORDERLY CONDITION. REMOVAL OF WASTE THAT IS NOT PROPERLY MAINTAINED IS SUBJECT TO THE DIRECTION OF THE CONTRACTING OFFICER.
5. CONTRACTOR SHALL COORDINATE THE RELOCATION OF ANY GOVERNMENT/CLIENT-OWNED EQUIPMENT WITH THE CONTRACTING OFFICER.
6. CONTRACTOR IS RESPONSIBLE FOR COORDINATING ALL REQUIREMENTS WITH STATE AND LOCAL AUTHORITIES AND SUBMITTING DOCUMENTS FOR PERMITTING FOR EROSION, SEDIMENT CONTROL, AND STORM WATER POLLUTION PREVENTION.
7. EROSION CONTROL DEVICES SHALL BE USED FOR THE ACCESS AND HAUL ROUTES, STAGING AREA, AND ANY MATERIAL STOCKPILES WHEN NECESSARY TO CONTROL EROSION AND STORM WATER RUNOFF. SEE DRAWING CG101 FOR EROSION AND SEDIMENT CONTROL REQUIREMENTS.
8. STOCKPILED MATERIAL SHALL BE CONSTRAINED IN A MANNER TO PREVENT MOVEMENT RESULTING FROM WIND CONDITIONS.
9. CONTRACTOR SHALL MAKE NECESSARY PROVISIONS TO LIMIT DUST CAUSED BY CONSTRUCTION ACTIVITIES TO A LIMIT ACCEPTABLE TO PROJECT BASE OPERATIONS. THE CONTRACTOR SHALL CONTROL BLOWING DUST ON THE PROJECT SITE FROM ANY HAUL ROUTE OR WORK AREA REGARDLESS OF SOURCE.
10. WILDLIFE ATTRACTANTS, SUCH AS TRASH AND FOOD SCRAPS, FROM CONSTRUCTION PERSONNEL AND ACTIVITIES SHALL BE REMOVED FROM THE PROJECT LIMITS.
11. GASOLINE, DIESEL FUEL, OIL, AND OTHER HAZARDOUS WASTE RESULTING FROM CONTRACTOR'S OPERATIONS OR ACTIVITIES SHALL BE PROPERLY DISPOSED OF IN ACCORDANCE WITH THE SPECIFICATIONS AND LOCAL REGULATORY REQUIREMENTS AND PROPERLY REMOVED FROM THE PROJECT PROPERTY. IF HAZARDOUS MATERIALS ARE ENCOUNTERED OR UNCOVERED DURING CONSTRUCTION ACTIVITIES, THE CONTRACTOR SHALL IMMEDIATELY NOTIFY THE CONTRACTING OFFICER.
12. IF CONSTRUCTION REQUIRES THE DISRUPTION OR DISCONNECTION OF ANY WATER LINES OR FIRE HYDRANTS ON PROJECT PROPERTY OR ADJOINING PROPERTY, THE CONTRACTOR SHALL PROVIDE A MINIMUM WRITTEN ADVANCE NOTICE OF 14 DAYS TO THE LOCAL FIRE AUTHORITY AND ALL OTHER EMERGENCY SERVICES.
13. FAILURE TO COMPLY WITH BASE OPERATIONS AND THE CONTRACTING OFFICER'S REPRESENTATIVE SAFETY REQUIREMENTS SHALL RESULT IN THE SUSPENSION OF CONSTRUCTION ACTIVITIES UNTIL ALL SAFETY CONCERNS ARE ADDRESSED BY THE CONTRACTOR TO THE SATISFACTION OF THE CONTRACTING OFFICER.
14. ALL WORKERS AND EQUIPMENT NOT IN COMPLIANCE WITH SAFETY PLAN OR BASE OPERATIONS SHALL IMMEDIATELY BE REMOVED FROM THE WORK AREA AND SHALL NOT BE PERMITTED TO RETURN THROUGHOUT THE REMAINDER OF THE PROJECT.

TRAFFIC CONTROL

1. ALL CONSTRUCTION EQUIPMENT AND VEHICLES SHALL BE MARKED WITH COMPANY DESIGNS, INSIGNIAS, OR OTHER MARKINGS, WHICH ARE CLEARLY VISIBLE.
2. CONSTRUCTION EQUIPMENT SHALL HAVE AUTOMATIC SIGNALING DEVICES TO SOUND AN ALARM WHEN MOVING IN REVERSE.
3. ONLY RUBBER-TIRE VEHICLES WILL BE ALLOWED ON EXISTING PAVEMENT-TO-REMAIN.
4. NO PEDESTRIAN TRAFFIC SHALL BE ALLOWED INSIDE THE CONSTRUCTION LIMITS.

US ARMY CORPS OF ENGINEERS
OMAHA DISTRICT

SYM.	DESCRIPTION	DATE	APPR.

SYM.	DESCRIPTION	DATE	APPR.

U.S. ARMY ENGINEER DISTRICT
CORPS OF ENGINEERS
OMAHA, NEBRASKA

BURNS & MCDONNELL
8201 NORMAN CENTER DR. #300
BLOOMINGTON, MN 55437
952-656-6003

DESIGNED BY: A. LOFTUS		DATE: APRIL 2016
DWN BY: K. HODNE	CKD BY: L.MONZON	SOLICITATION NO.: W9128F-16-B-0007
SUBMITTED BY: -		CONTRACT NO.: -
FILE NAME: MIA8C-002		FILE NUMBER: AF212-220
SIZE: 34X22	PLOT SCALE: N/A	PLOT DATE: 4/22/2016

FY15 P-341 CONSTRUCT ADDITION B1134
MINOT AFB, NORTH DAKOTA
PN: QJVF143101

GENERAL CIVIL NOTES

SHEET IDENTIFICATION NUMBER
C-002

COPYRIGHT © 2016 BURNS & McDONNELL ENGINEERING COMPANY, INC.

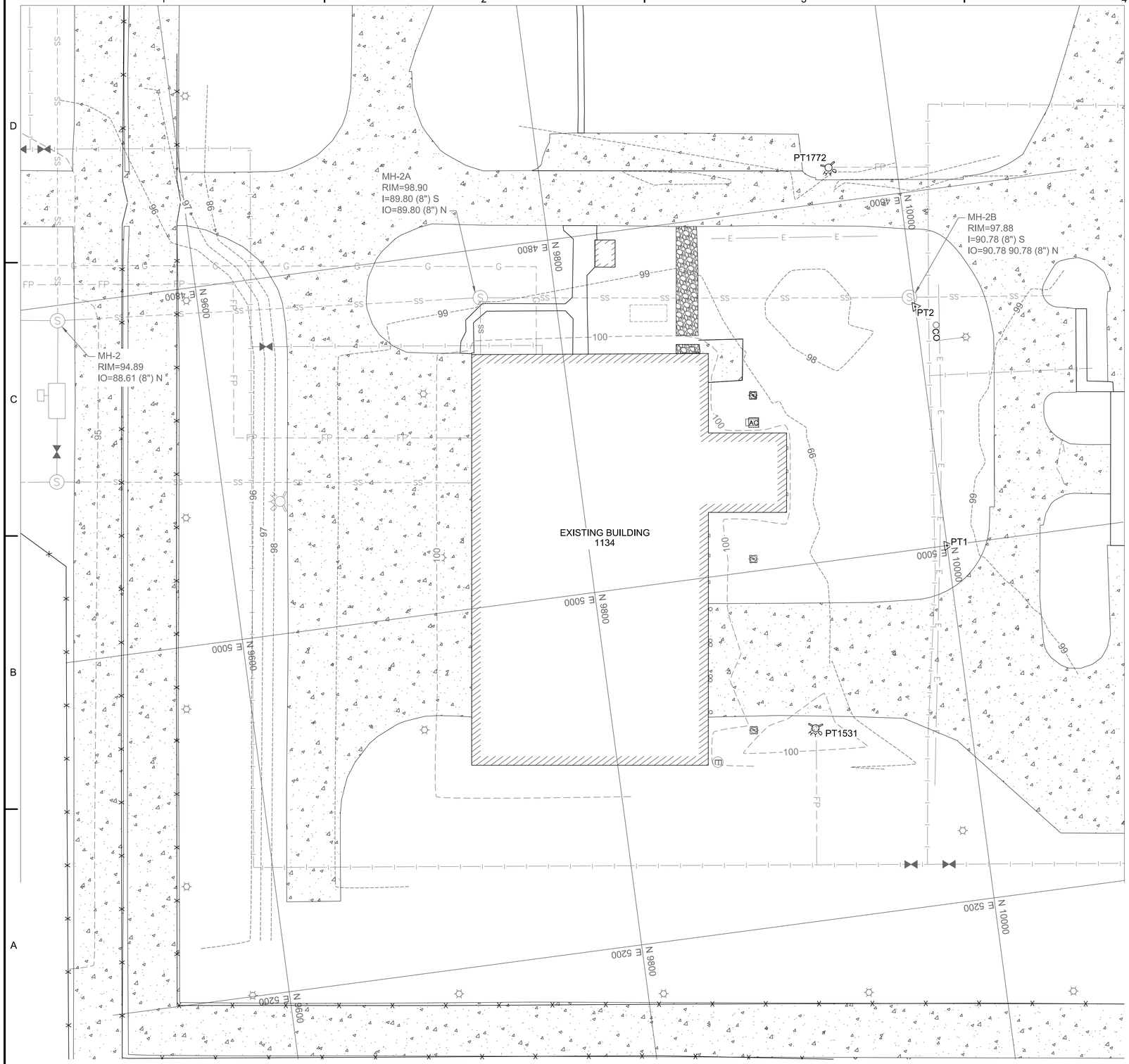

SCALE:1"=30'

LEGEND

STATION MARK	MAJOR CONTOUR INTERVAL
HYDRANT	MINOR CONTOUR INTERVAL
ELECTRIC MH	BITUMINOUS SURFACE
SPOT ELEVATION	CONCRETE SURFACE
LIGHT	PATIO
LPS POLE	SANITARY SEWER
BOLLARD	ELECTRIC
CLEAN OUT	WATER
PIV	FIRE PROTECTION
AIR CONDITIONER	FENCE
DOWN SPOUT	

SURVEY AND SUBSURFACE INVESTIGATION NOTES:

1. THE SURVEY WAS PERFORMED BY EVS, INC. SURVEY CONTROL POINTS SHALL BE PROVIDED PRIOR TO CONSTRUCTION AND SHALL BE RESET BY THE CONTRACTOR IF DISTURBED DURING CONSTRUCTION.
2. CONTRACTOR SHALL RETAIN A LICENSED SURVEYOR TO SURVEY PROJECT IMPROVEMENTS. IF BENCHMARKS SHOWN ARE IN AREAS THAT REQUIRE DEMOLITION, OTHER BENCHMARKS SHALL BE ESTABLISHED BEFORE DEMOLITION AND CONSTRUCTION WORK BEGINS. CONTRACTOR SHALL SUPPLY CERTIFIED, CONTROL POINT DATA TO CONTRACTING OFFICER AFTER COMPLETION OF CONSTRUCTION.
3. THE GEOTECHNICAL INVESTIGATION WAS PERFORMED BY MATERIAL TESTING SERVICES, LLC IN MAY OF 2015.

CONTROL POINT DATA

POINT NUMBER	FULL DESCRIPTION	NORTHING	EASTING	ELEVATION
1	CP 1 SPK	5000.00	10000.00	100.00
2	CP 1 SPK	5000.00	9864.41	99.82
1531	HYD TNH	4913.09	10092.16	102.73
1772	HYD TNH	4961.99	9780.41	101.29

NOTE: CONTROL BASED ON LOCAL COORDINATES.

EXISTING CONDITIONS NOTES:

1. THE LOCATIONS OF STRUCTURES AND UNDERGROUND UTILITIES AS INDICATED HAVE BEEN OBTAINED FROM EXISTING RECORDS AND FIELD SURVEYS. UNDERGROUND STRUCTURES AND UTILITIES MAY BE PRESENT WHICH ARE NOT DOCUMENTED OR LOCATED.
2. THE CONTRACTOR SHALL FIELD-CHECK ALL EXISTING CONDITIONS AND BE THOROUGHLY FAMILIAR WITH THE SITE BEFORE ANY WORK COMMENCES. ANY DISCREPANCIES IN THE DRAWINGS SHALL BE IMMEDIATELY REPORTED TO THE CONTRACTING OFFICER BEFORE ANY FURTHER WORK COMMENCES.
3. IT SHALL BE THE CONTRACTOR'S RESPONSIBILITY TO FIELD-VERIFY EXISTING STRUCTURES, UTILITIES, AND SURVEY INFORMATION, AND TO TAKE NECESSARY PRECAUTIONS DURING DEMOLITION AND CONSTRUCTION. CONTRACTOR SHALL VERIFY EXISTENCE AND MARK LOCATIONS OF ALL UTILITIES, INCLUDING SERVICE CONNECTIONS TO UNDERGROUND UTILITIES, PRIOR TO BEGINNING WORK. CONTRACTOR SHALL CONTACT THE CONTRACTING OFFICER AND ALL ASSOCIATED UTILITY COMPANIES AND AGENCIES TO IDENTIFY THE LOCATION OF UTILITIES. THERE IS NO GUARANTEE, EITHER EXPRESSED OR IMPLIED, THAT THE LOCATIONS, SIZE AND TYPE OF MATERIAL OF EXISTING UNDERGROUND UTILITIES INDICATED ARE REPRESENTATIVE OF THOSE TO BE ENCOUNTERED DURING CONSTRUCTION.
4. PRIOR TO CONSTRUCTION, THE CONTRACTOR SHALL NOTIFY THE CONTRACTING OFFICER OF OPERATIONAL PLANS. IN THE EVENT CONFLICT IS ENCOUNTERED DURING CONSTRUCTION, THE CONTRACTOR SHALL IMMEDIATELY NOTIFY THE CONTRACTING OFFICER. ANY UTILITY SERVICES OR STRUCTURES DISTURBED BY THE CONTRACTOR'S OPERATIONS SHALL BE RESTORED IMMEDIATELY AT CONTRACTOR'S EXPENSE TO THE SATISFACTION OF THE OWNER.
5. THE CONTRACTOR IS RESPONSIBLE FOR PROTECTING ITEMS NOT TO BE DAMAGED DURING DEMOLITION AND CONSTRUCTION. THE CONTRACTOR SHALL REPAIR OR REPLACE DAMAGED OR DISTURBED ITEMS TO THE SATISFACTION OF THE CONTRACTING OFFICER.

US ARMY CORPS OF ENGINEERS
OMAHA DISTRICT

SYM.	DESCRIPTION	DATE	APPR.	SYM.	DESCRIPTION	DATE	APPR.

U.S. ARMY ENGINEER DISTRICT
CORPS OF ENGINEERS
OMAHA, NEBRASKA

BURNS & McDONNELL
8200 NORTH MAY AVENUE, SUITE #300
BLOOMINGTON, MN 55437
952-656-6003

DESIGNED BY: A. LOFTUS
DRAWN BY: K. HODNE
CKD BY: K.JENSEN
SUBMITTED BY: -
DATE: APRIL 2016
SOLICITATION NO.: W912BF-16-B-0007
CONTRACT NO.: -
FILE NAME: MIA8V-101
FILE NUMBER: AF212-220
SIZE: 34X22
PLOT SCALE: 1" = 30'
PLOT DATE: 4/22/2016

FY15 P-341 CONSTRUCT ADDITION B1134
MINOT AFB, NORTH DAKOTA
PN: QUVF143101

EXISTING CONDITIONS PLAN

SHEET IDENTIFICATION NUMBER
V-101

COPYRIGHT © 2016 BURNS & McDONNELL ENGINEERING COMPANY, INC.

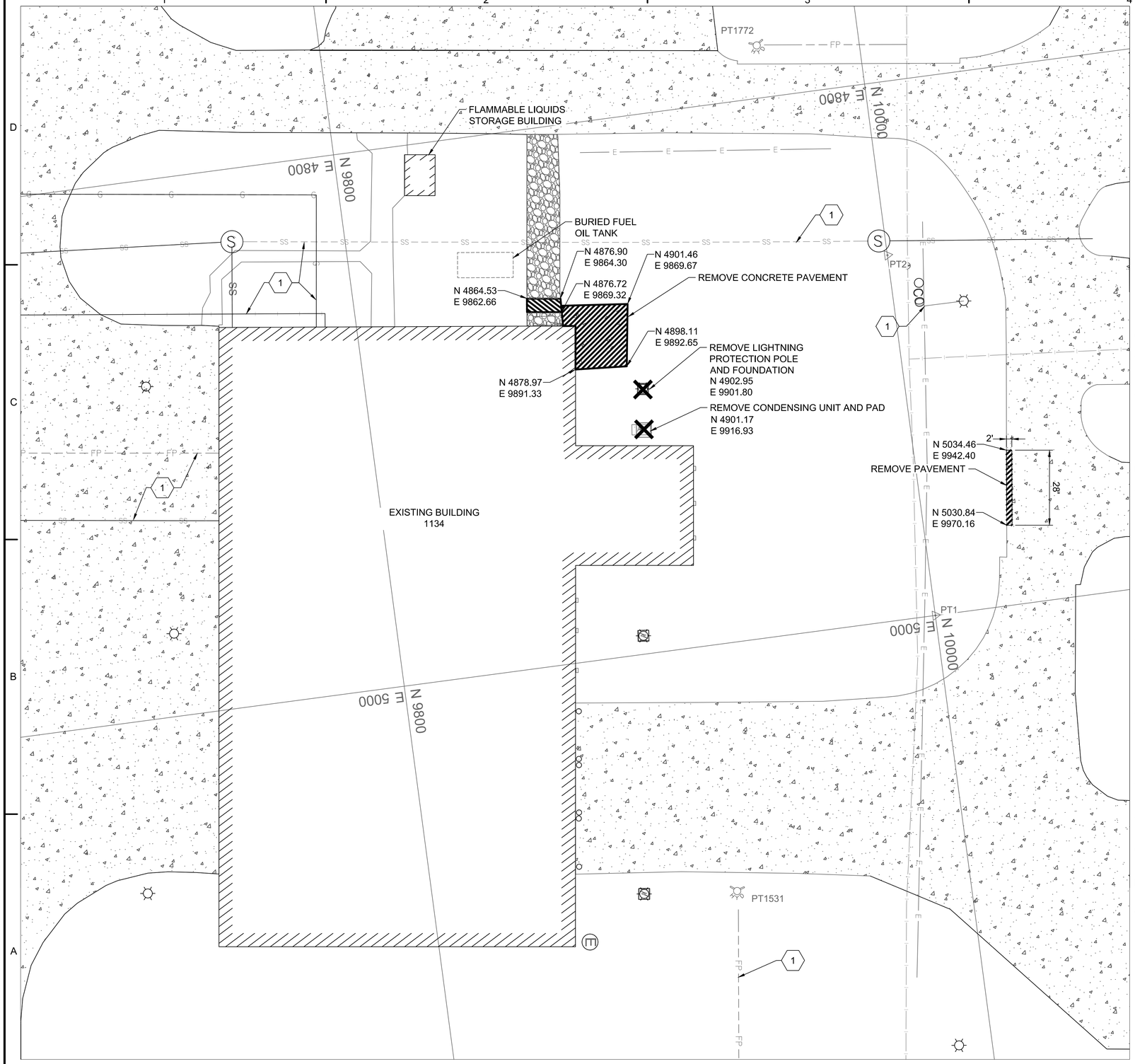

N

0 30' 60'

SCALE:1"=30'

LEGEND

- MISCELLANEOUS REMOVAL
- ±4" PAVEMENT REMOVAL
- EXISTING WATER LINE
- EXISTING GAS LINE
- EXISTING SANITARY SEWER LINE
- EXISTING ELECTRICAL LINE

GENERAL DEMOLITION NOTES:

1. ALL DEMOLITION, WASTE, DEBRIS, AND UNSATISFACTORY MATERIALS SHALL BE DISPOSED OF OFF BASE.
2. ANY DAMAGE TO PAVEMENT AREAS DESIGNATED TO REMAIN SHALL BE REPAIRED OR REMOVED AND REPLACED AT NO ADDITIONAL COST TO GOVERNMENT.
3. CONTRACTOR SHALL SUBMIT AN AF FORM 103 AND OBTAIN BASE CIVIL ENGINEERING WORK CLEARANCE PRIOR TO STARTING WORK. THE FORM CAN BE OBTAINED FROM 5TH CIVIL ENGINEERING SQUADRON CUSTOMER SERVICE.

UTILITY DEMOLITION NOTES:

1. CONTRACTOR SHALL VERIFY EXISTENCE AND MARK LOCATIONS OF ALL UTILITIES, INCLUDING SERVICE CONNECTIONS TO UNDERGROUND UTILITIES, PRIOR TO BEGINNING WORK. CONTRACTOR SHALL CONTACT THE CONTRACTING OFFICER AND ALL ASSOCIATED UTILITY COMPANIES AND AGENCIES TO IDENTIFY THE LOCATION OF UTILITIES. UTILITIES PRESENTED ON THESE SHEETS ARE APPROXIMATE AND ARE SHOWN BASED ON THE BEST AVAILABLE INFORMATION. THE LOCATIONS OF UNDERGROUND UTILITIES AS INDICATED ON THE PLANS HAVE BEEN OBTAINED FROM EXISTING RECORDS AND FIELD SURVEYS. THE OWNER DOES NOT ASSUME ANY RESPONSIBILITY WITH RESPECT TO THE ACCURACY, COMPLETENESS, OR SUFFICIENCY OF THE INFORMATION. THERE IS NO GUARANTEE, EITHER EXPRESSED OR IMPLIED, THAT THE LOCATIONS, SIZE AND TYPE OF MATERIAL OF EXISTING UNDERGROUND UTILITIES INDICATED ARE REPRESENTATIVE OF THOSE TO BE ENCOUNTERED DURING CONSTRUCTION.
2. PRIOR TO CONSTRUCTION, THE CONTRACTOR SHALL NOTIFY THE CONTRACTING OFFICER OF OPERATIONAL PLANS. IN THE EVENT AN UNEXPECTED UTILITY INTERFERENCE IS ENCOUNTERED DURING CONSTRUCTION, THE CONTRACTOR SHALL IMMEDIATELY NOTIFY THE CONTRACTING OFFICER. ANY UTILITY SERVICES DISTURBED BY THE CONTRACTOR'S OPERATIONS SHALL BE RESTORED IMMEDIATELY AT CONTRACTOR'S EXPENSE TO THE SATISFACTION OF THE GOVERNMENT.
3. CONTRACTOR SHALL COORDINATE WITH THE CONTRACTING OFFICER PRIOR TO REMOVAL OF EXISTING UTILITIES IN SERVICE. RELOCATED UTILITIES SHALL BE CONSTRUCTED BEFORE REMOVAL OF EXISTING UTILITIES TO ENSURE UNINTERRUPTED SERVICE TO THE FACILITIES SERVED BY THE UTILITY. ALL RELOCATIONS SHALL BE COORDINATED WITH THE CONTRACTING OFFICER.
4. CONTRACTOR SHALL NOTIFY CONTRACTING OFFICER AT LEAST 48 HOURS BEFORE PROCEEDING WITH ANY EXCAVATION.
5. CONTRACTOR SHALL NOTIFY CONTRACTING OFFICER OF ANY UNFORESEEN UTILITY CONFLICTS AS SOON AS DISCOVERED.
6. ALL STRUCTURES, VALVES, ETC. TO REMAIN SHALL BE PROTECTED AND ADJUSTED TO FINISH GRADE BY CONTRACTOR.

KEYED NOTES:

1. UTILITIES TO REMAIN. PROTECT DURING CONSTRUCTION.

US ARMY CORPS OF ENGINEERS
OMAHA DISTRICT

SYM.	DESCRIPTION	DATE	APPR.	SYM.	DESCRIPTION	DATE	APPR.

U.S. ARMY ENGINEER DISTRICT
CORPS OF ENGINEERS
OMAHA, NEBRASKA

DESIGNED BY: A. CUTLER
DWN BY: K. HOONE
CKD BY: K.JENSEN
SUBMITTED BY:
FILE NAME: MA8CD101
SIZE: 34X22
PLOT SCALE: 1" = 30'
DATE: APRIL 2016
SOLICITATION NO.: W912BF-16-B-0007
CONTRACT NO.: -
FILE NUMBER: AF212-220
PLOT DATE: 4/22/2016

BURNS & McDONNELL
8201 NORMANDALE LAKE BLVD #300
BLOOMINGTON, MN 55437
952-656-6003

FY15 P-341 CONSTRUCT ADDITION B1134
MINOT AFB, NORTH DAKOTA
PN: QJVF143101

DEMOLITION PLAN

SHEET IDENTIFICATION NUMBER
CD101

COPYRIGHT © 2016 BURNS & McDONNELL ENGINEERING COMPANY, INC.

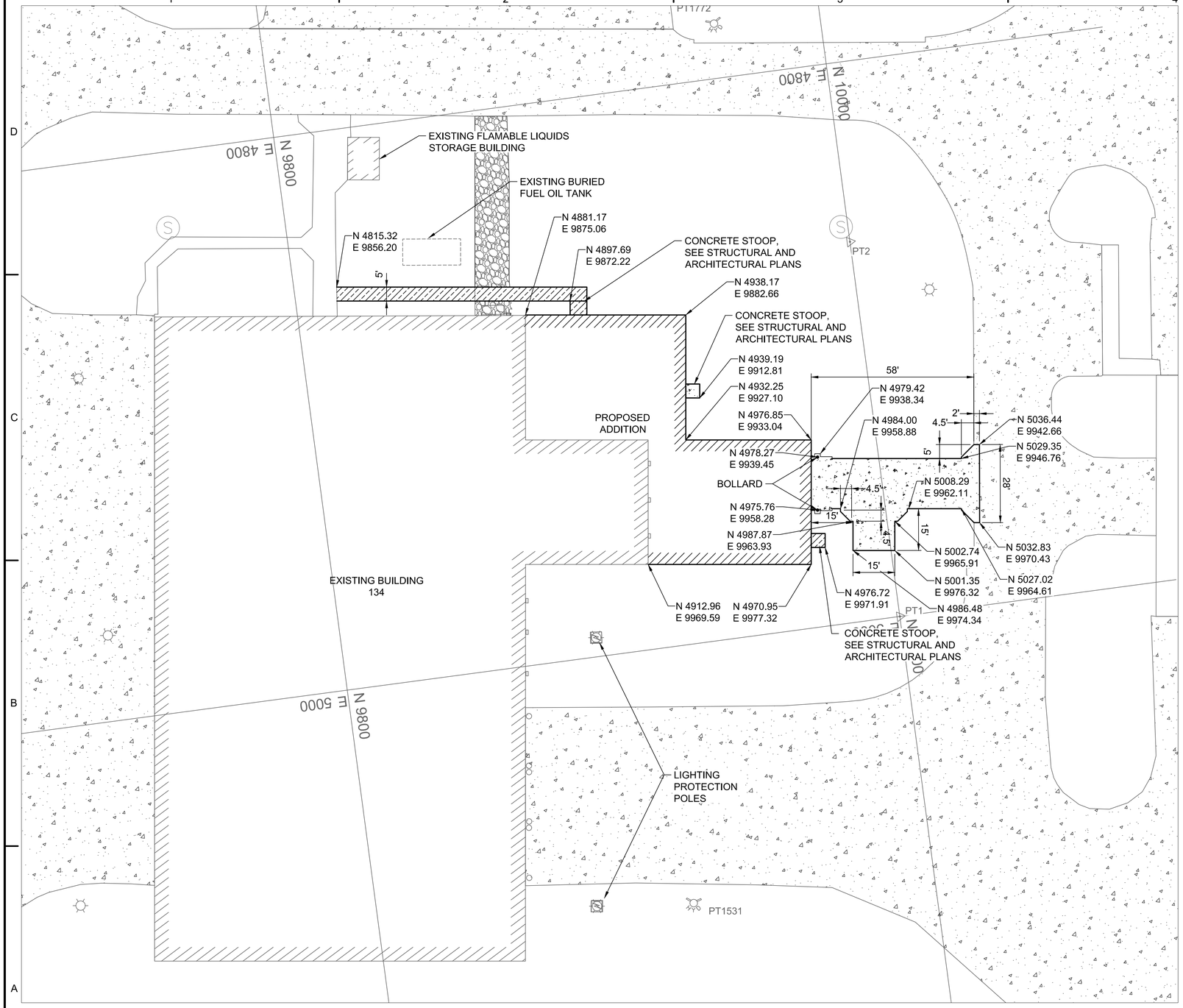

N

0 20' 40'
SCALE:1"=20'

LEGEND

BUILDING	
RIGID CONCRETE PAVEMENT	C1 / C-500
BOLLARD	C4 / C-502
SIDEWALK	A1 / C-500

SITE PLAN NOTES:

1. CONTRACTOR SHALL COORDINATE BUILDING ENTRANCES, EGRESSES, WALKWAYS, AND DOORWAY LOCATIONS WITH STRUCTURAL AND ARCHITECTURAL DRAWINGS.
2. BUILDING COORDINATES ARE POINTED TO OR MEASURED AT THE OUTSIDE FACE OF BUILDING FOUNDATION. CONTRACTOR SHALL COORDINATE BEARINGS OF BUILDING WITH STRUCTURAL DRAWINGS.
3. SEE SHEET CP101 FOR CONCRETE PAVEMENT JOINTING AND ELEVATION PLAN.
4. SEE SHEET CG101 FOR GRADING LIMITS AND DISTURBED AREA THAT SHALL BE SEEDED.
5. SEE SHEET CU101 FOR UTILITY PLAN OF NEW AND EXISTING UTILITIES.
6. HORIZONTAL CONTROL IS BASED ON LOCAL COORDINATES. SEE V-101 FOR CONTROL POINT DATA.

US ARMY CORPS OF ENGINEERS
OMAHA DISTRICT

SYM.	DESCRIPTION	DATE	APPR.

SYM.	DESCRIPTION	DATE	APPR.

U.S. ARMY ENGINEER DISTRICT
CORPS OF ENGINEERS
OMAHA, NEBRASKA

BURNS & MCDONNELL
8201 NORMAN CENTER DR. #300
BLOOMINGTON, MN 55437
952-656-6003

DESIGNED BY: A. LOFTUS
DWN BY: K. HOONE
CKD BY: K.JENSEN
SUBMITTED BY: -
FILE NAME: MIA8CS101
SIZE: 34X22
PLOT SCALE: 1" = 20'
DATE: APRIL 2016
SOLICITATION NO.: W9128F-16-B-0007
CONTRACT NO.: -
FILE NUMBER: AF212-220
PLOT DATE: 4/22/2016

FY15 P-341 CONSTRUCT ADDITION B1134
MINOT AFB, NORTH DAKOTA
PN: QJVF143101

SITE PLAN

SHEET IDENTIFICATION NUMBER
CS101

COPYRIGHT © 2016 BURNS & McDONNELL ENGINEERING COMPANY, INC.

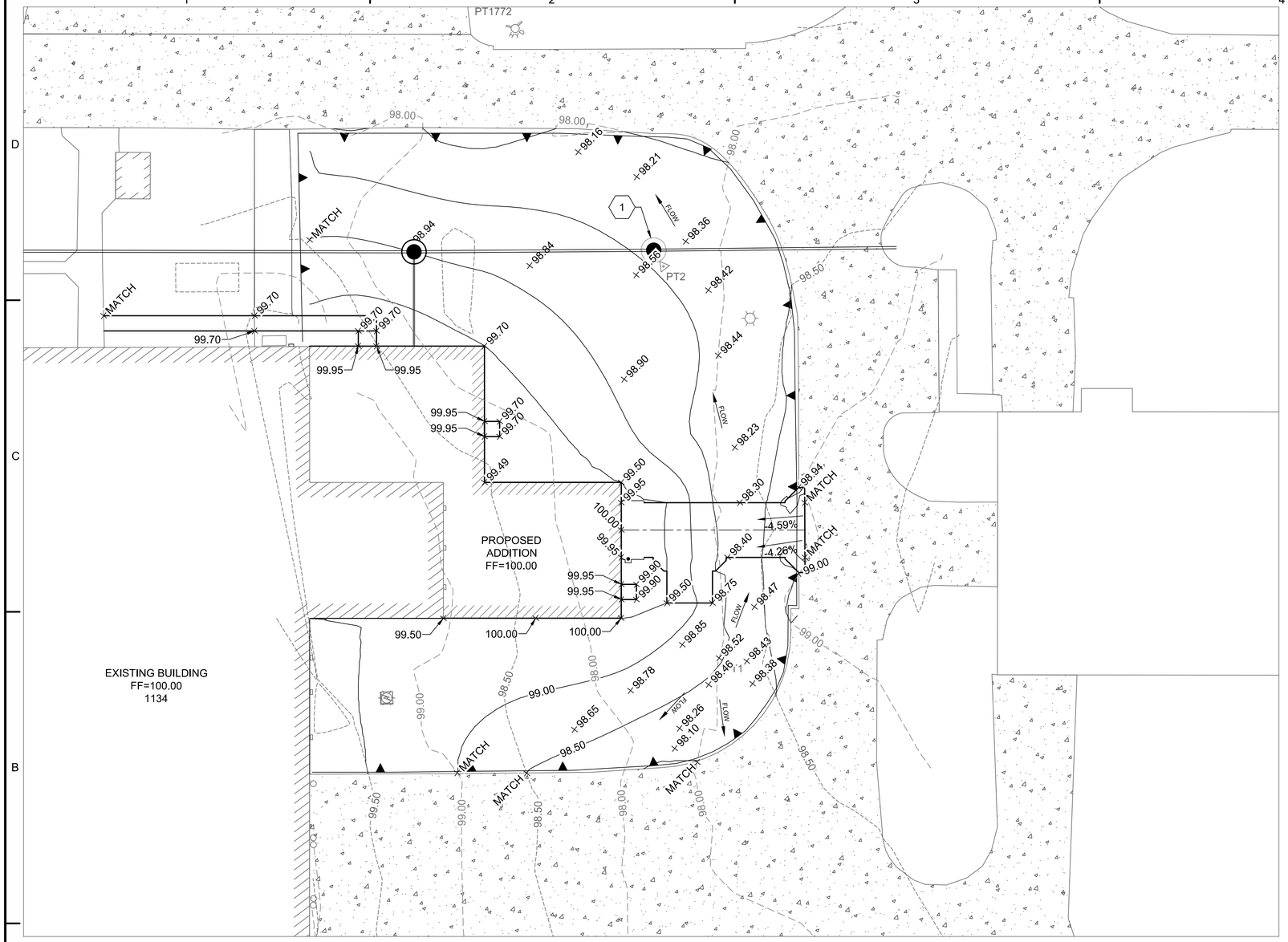

N

0 20' 40'
SCALE:1"=20'

LEGEND

99	NEW CONTOUR
98	EXISTING CONTOUR
FLOW	DRAINAGE FLOW DIRECTION
	SILT FENCE — A1 C-502
X 100.00	PROPOSED SPOT ELEVATION

NOTE:

1. ADJUST RIM ELEVATIONS OF EXISTING STRUCTURES TO PROPOSED ELEVATIONS.

NOT FOR CONSTRUCTION

US ARMY CORPS OF ENGINEERS
OMAHA DISTRICT

SYM.	DESCRIPTION	DATE	APPR.	SYM.	DESCRIPTION	DATE	APPR.

U.S. ARMY ENGINEER DISTRICT
CORPS OF ENGINEERS
OMAHA, NEBRASKA

BURNS & McDONNELL
8201 NORMANDALE BLVD. #300
BLOOMINGTON, MN 55437
952-656-6003

DESIGNED BY: A. LOFTUS	DATE: APRIL 2016
DWN BY: K. HYDINE	CKD BY: K.JENSEN
SOLICITATION NO.: W912BF-16-B-0007	
SUBMITTED BY: -	CONTRACT NO.: -
FILE NAME: M9A6CG101	FILE NUMBER: AF212-220
SIZE: 34X22	PLOT SCALE: 1" = 20'
PLOT DATE: 4/22/2016	

FY15 P-341 CONSTRUCT ADDITION B1134
MINOT AFB, NORTH DAKOTA
PN: QUVF143101

GRADING PLAN

SHEET IDENTIFICATION NUMBER
CG101

COPYRIGHT © 2016 BURNS & McDONNELL ENGINEERING COMPANY, INC.

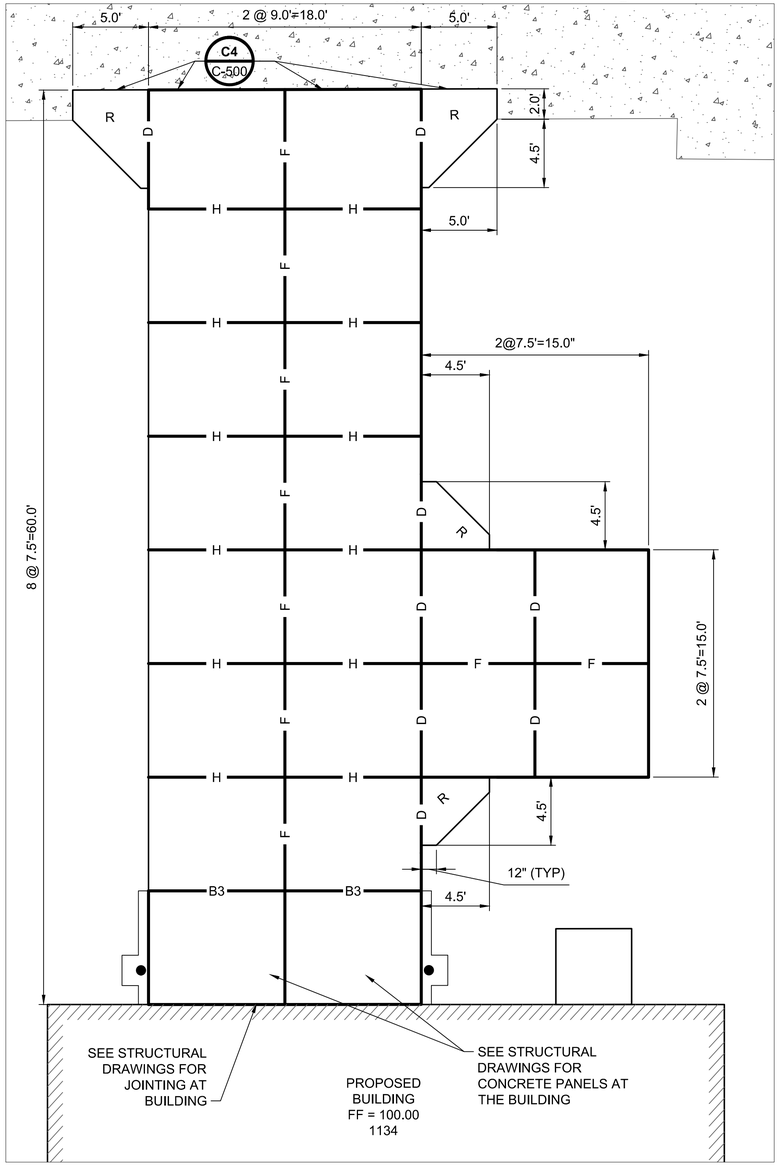

PAVEMENT JOINTING PLAN

0 5' 10'
SCALE:1"=5'

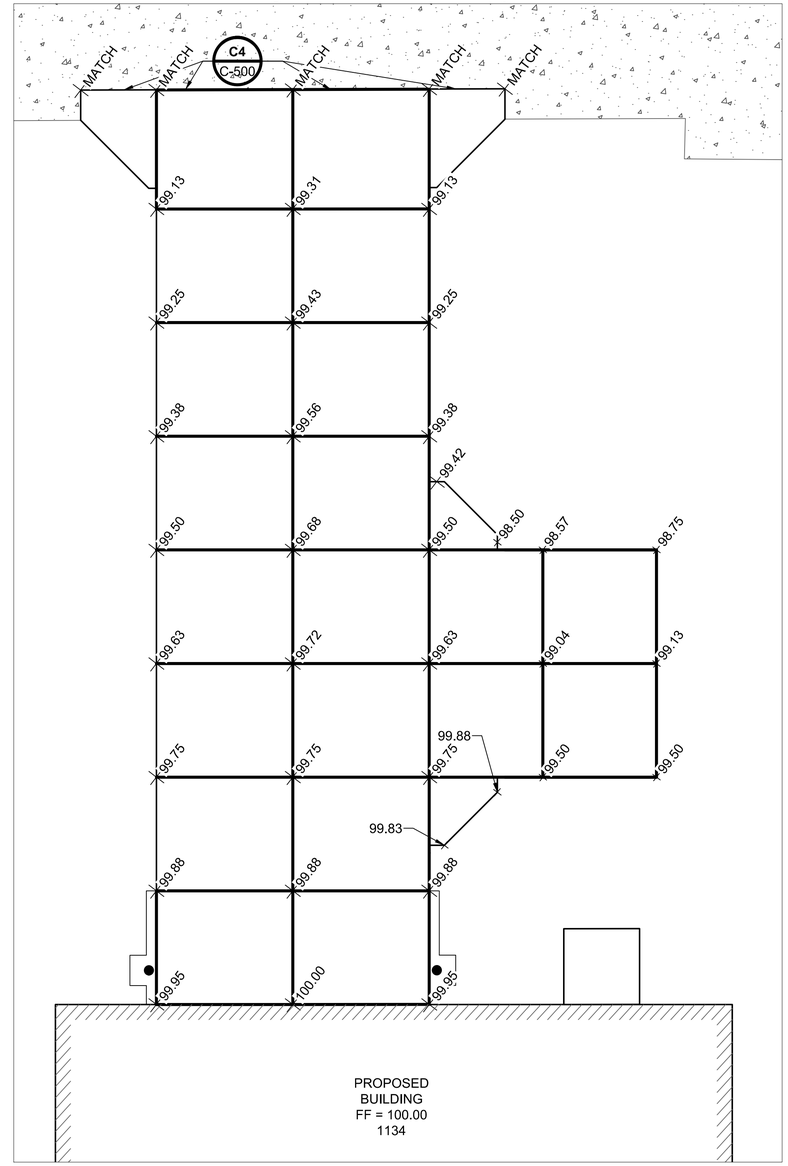

PAVEMENT ELEVATION PLAN

0 5' 10'
SCALE:1"=5'

LEGEND

D	DOWELED CONSTRUCTION JOINT (TYPE D)	C3 / C-501
B3	THICKENED EDGE EXPANSION JOINT AT FOUNDATION OR STRUCTURE (TYPE B3)	A3 / C-501
F	DOWELED CONTRACTION JOINT (TYPE F)	A4 / C-501
R	REINFORCED PANEL (TYPE R)	B4 / C-501
H	DUMMY GROOVE CONTRACTION JOINT (TYPE H)	B3 / C-501

PAVEMENT JOINTING NOTES:

1. ALL CONCRETE PANELS THAT SUPPORT UTILITY STRUCTURES OR ARE IRREGULAR IN SHAPE SHALL BE REINFORCED.
2. ALL JOINT CHANGES SHALL BE APPROVED BY CONTRACTING OFFICER.
3. SEE SHEET C-501 FOR JOINT SEALANT, AND SLAB REINFORCING DETAILS.

US ARMY CORPS OF ENGINEERS
OMAHA DISTRICT

SYM.	DESCRIPTION	DATE	APPR.	SYM.	DESCRIPTION	DATE	APPR.

DESIGNED BY: A. CORTES
DWN BY: K. HOONE
CKD BY: K. JENSEN
SUBMITTED BY: -
DATE: APRIL 2016
SOLICITATION NO.: W912BF-16-B-0007
CONTRACT NO.: -
FILE NUMBER: AF212-220
FILE NAME: MA8CP101
SIZE: 34X22
PLOT SCALE: 1" = 5'
PLOT DATE: 4/22/2016

U.S. ARMY ENGINEER DISTRICT
CORPS OF ENGINEERS
OMAHA, NEBRASKA

BURNS & McDONNELL
8200 NORMANDALE BLVD. SUITE 300
BLOOMINGTON, MN 55437
952-656-8003

FY15 P-341 CONSTRUCT ADDITION B1134
MINOT AFB, NORTH DAKOTA
PN: QJVF143101

PAVEMENT JOINTING AND ELEVATION PLAN

SHEET IDENTIFICATION NUMBER
CP101

COPYRIGHT © 2016 BURNS & McDONNELL ENGINEERING COMPANY, INC.

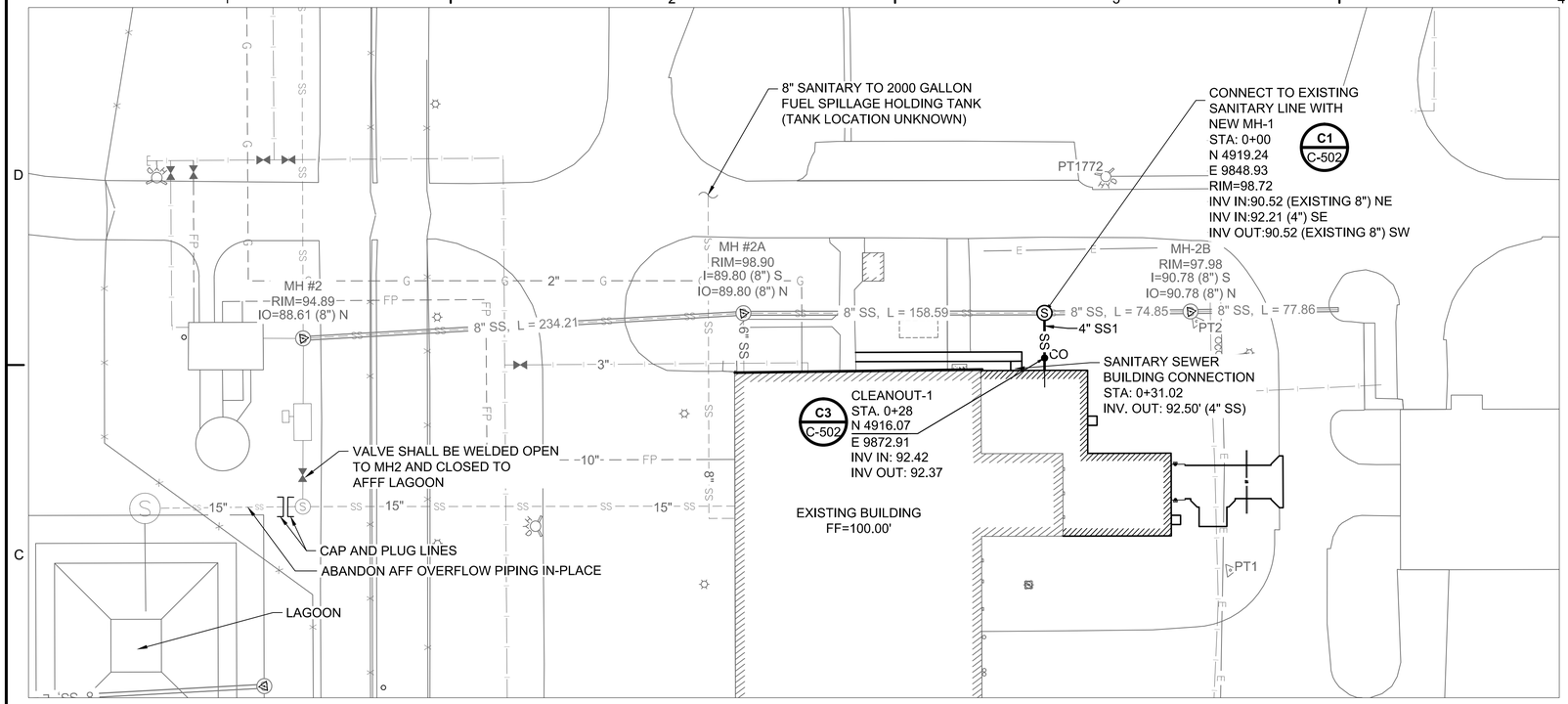

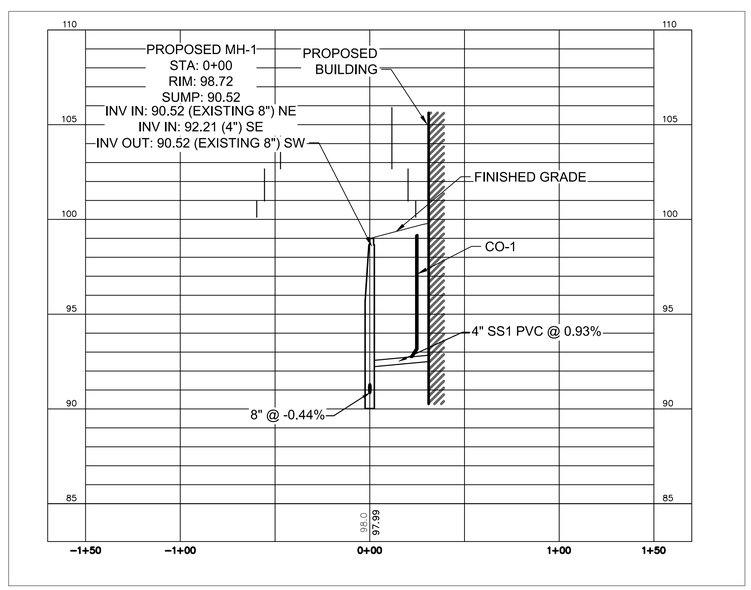

SANITARY PROFILE 1
SS1

HORIZONTAL: 0 20' 40' SCALE:1"=20'

VERTICAL: 0 2' 4' SCALE:1"=2'

N 0 40' 80' SCALE:1"=40'

LEGEND

- SS — SANITARY SEWER
- DOMESTIC WATER
- E — ELECTRIC
- G — NATURAL GAS
- FP — DOMESTIC FIRE
- CO — CLEANOUT
- MANHOLE

UTILITY NOTES:

1. ALL PIPE SIZES ARE IN INCHES UNLESS INDICATED OTHERWISE.
2. CONTRACTOR SHALL CONTACT THE CONTRACTING OFFICER AND ALL ASSOCIATED UTILITY COMPANIES AND AGENCIES TO IDENTIFY THE LOCATION OF UTILITIES PRIOR TO COMMENCEMENT OF WORK.
3. CONTRACTOR SHALL COORDINATE ALL REQUIRED UTILITY SHUTDOWNS FOR UTILITY CONNECTIONS WITH THE CONTRACTING OFFICER.
4. CONTRACTOR SHALL PROVIDE A MINIMUM NOTICE OF 48 HOURS TO THE CONTRACTING OFFICER AND ASSOCIATED UTILITY COMPANIES AND AGENCIES BEFORE PROCEEDING WITH ANY EXCAVATION.
5. ALL UNDERGROUND UTILITIES ARE SUBJECT TO ACCEPTANCE TESTING AND INSPECTION METHODS DETAILED IN THE SPECIFICATIONS.
6. ANY CHANGES TO PROPOSED UTILITY DESIGN SHALL BE APPROVED BY ENGINEER AND THE CONTRACTING OFFICER.
7. SEE ELECTRICAL SHEETS FOR NEW ELECTRICAL UTILITIES.
8. UTILITIES AT MINOT AFB ARE PRIVATIZED AND WILL REQUIRE THE CONTRACTOR TO CONTACT THE FOLLOWING UTILITY PROVIDERS FOR PLACEMENT OF GAS, WATER, SANITARY SEWER AND ELECTRICAL UTILITIES FOR THE PROPOSED FACILITY. THE CONTRACTOR SHALL PAY ALL SERVICE INSTALLATION FEES, CONNECTION FEES AND /OR UTILITY TAP-IN FEES ASSOCIATED WITH THE NEW UTILITIES BEING INSTALLED ON THIS PROJECT.

UTILITY STRUCTURE NOTES:

1. ALL UTILITY STRUCTURES ARE TO BE H-20 RATED UNLESS INDICATED OTHERWISE.
2. COVERS AND CASTINGS SHALL BE TAMPER PROOF.

US ARMY CORPS OF ENGINEERS
OMAHA DISTRICT

SYM.	DESCRIPTION	DATE	APPR.	SYM.	DESCRIPTION	DATE	APPR.

DESIGNED BY: A. CRYER
DWN BY: K. HOONE
CKD BY: K. JENSEN
SUBMITTED BY: -
DATE: APRIL 2016
SOLICITATION NO.: W912BF-16-B-0007
CONTRACT NO.: -
FILE NAME: M9A8CU101
FILE NUMBER: AF212-220
SIZE: 34X22
PLOT SCALE: 1" = 40'
PLOT DATE: 4/22/2016

U.S. ARMY ENGINEER DISTRICT
CORPS OF ENGINEERS
OMAHA, NEBRASKA

BURNS & McDONNELL
8201 NORMA AVENUE, SUITE #300
BLOOMINGTON, MN 55437
952-656-6003

FY15 P-341 CONSTRUCT ADDITION B1134
MINOT AFB, NORTH DAKOTA
PN: QJVF143101

UTILITY PLAN

SHEET IDENTIFICATION NUMBER
CU101

COPYRIGHT © 2016 BURNS & McDONNELL ENGINEERING COMPANY, INC.

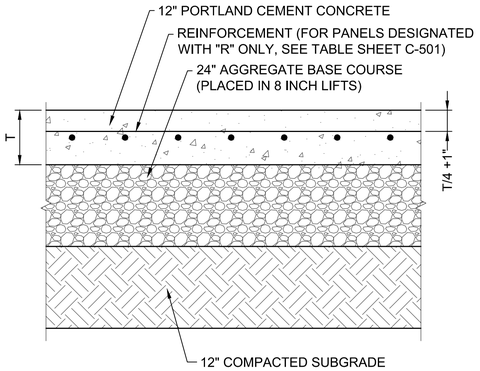

C1 RIGID CONCRETE PAVEMENT

SCALE:NTS

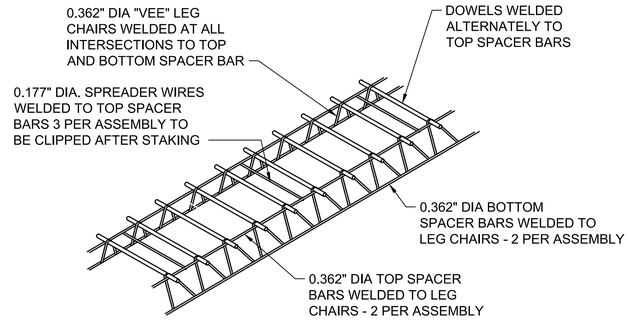

C2 DOWEL BAR ASSEMBLY

SCALE:NTS

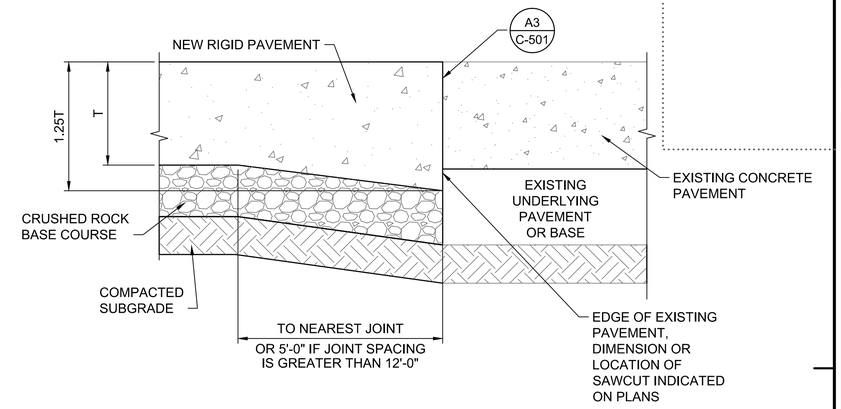

C4 PAVEMENT JUNCTURE BETWEEN NEW CONCRETE AND EXISTING CONCRETE

SCALE:NTS

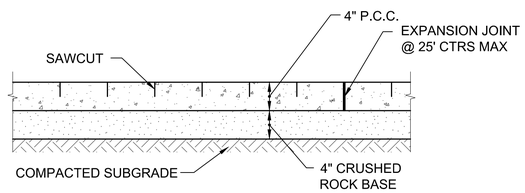

SECTION A

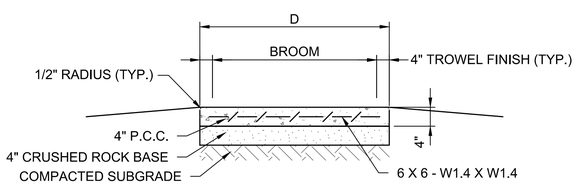

SECTION B

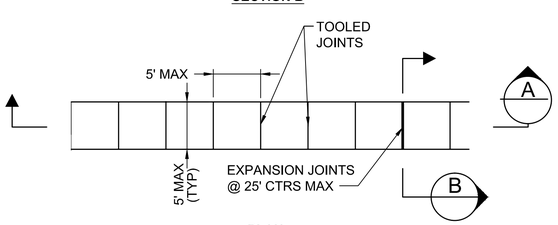

PLAN

NOTES:

1. BROOM FINISH SHALL BE APPLIED PERPINDICULAR TO DIRECTION OF TRAFFIC.

A1 TYPICAL SIDEWALK DETAIL

SCALE:NTS

COPYRIGHT © 2016 BURNS & McDONNELL ENGINEERING COMPANY, INC.

US ARMY CORPS OF ENGINEERS
OMAHA DISTRICT

SYM.	DESCRIPTION	DATE	APPR.

SYM.	DESCRIPTION	DATE	APPR.

DESIGNED BY: A. LOFTUS
DWN BY: K. HOONE
CKD BY: K.JENSEN
SUBMITTED BY: -
FILE NAME: MIA8C-500
SIZE: 34X22
PLOT SCALE: NTS
DATE: APRIL 2016
SOLICITATION NO.: W9128F-16-B-0007
CONTRACT NO.: -
FILE NUMBER: AF212-220
PLOT DATE: 4/22/2016

U.S. ARMY ENGINEER DISTRICT
CORPS OF ENGINEERS
OMAHA, NEBRASKA

BURNS & MCDONNELL
8201 NORMAN CENTER DR. #300
BLOOMINGTON, MN 55437
952-656-6003

FY15 P-341 CONSTRUCT ADDITION B1134
MINOT AFB, NORTH DAKOTA
PN: QJVF143101

PAVEMENT DETAILS (SHEET 1 OF 2)

SHEET IDENTIFICATION NUMBER
C-500

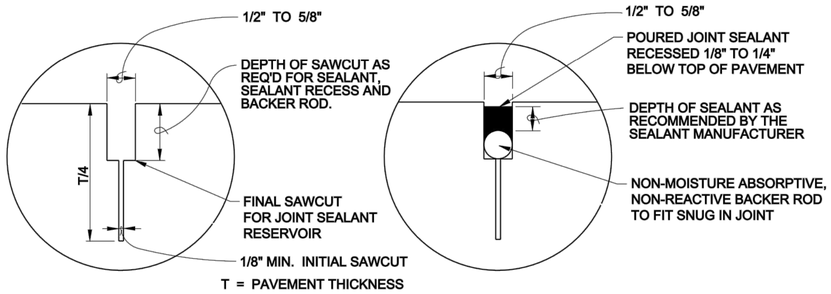

SAWCUT **COMPLETED SAWCUT JOINT**

CONTRACTION JOINT SEALANT DETAILS (SAWED TYPE)

NO SCALE

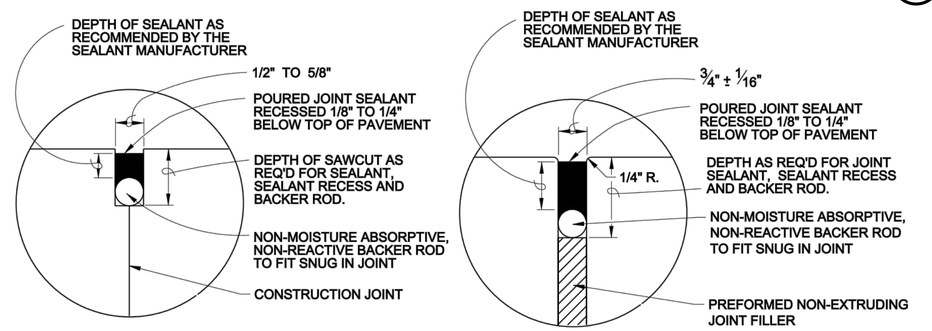

COMPLETED CONSTRUCTION JOINT SEALANT DETAIL **COMPLETED EXPANSION JOINT SEALANT DETAIL**

POURED JOINT SEALANT DETAILS

NO SCALE

TABLE 1			
PAVEMENT THICKNESS	MAXIMUM DOWEL SPACING	MINIMUM DOWEL LENGTH	MINIMUM DOWEL DIAMETER
12"	12"	16"	1"

TABLE 2		
PAVEMENT THICKNESS (INCHES)	MINIMUM REQUIRED AREA OF STEEL (SQ. INCHES / FOOT)	WELDED WIRE FABRIC
12"	0.08	6"x6"-W4.0xW4.0

NOTE:
SLABS MARKED "R" ON THE JOINT LAYOUT PLAN SHALL BE REINFORCED WITH STEEL WELDED WIRE FABRIC OF THE SIZES SHOWN IN TABLE 2. OTHER WWF SIZES MAY BE USED PROVIDED THE STEEL AREA (SQUARE INCHES PER FOOT) IN THE LONGITUDINAL AND TRANSVERSE DIRECTIONS IS EQUAL TO OR EXCEEDS THAT SHOWN IN TABLE 2.

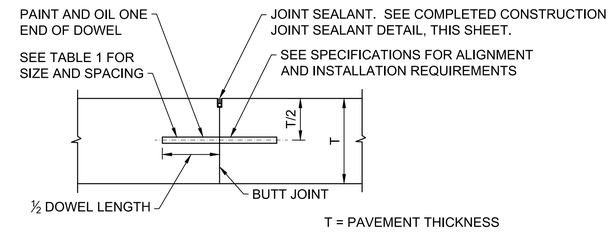

TRANSVERSE OR LONGITUDINAL DOWELED JOINT

C3 CONSTRUCTION JOINT DETAILS (TYPE D)

SCALE:NTS

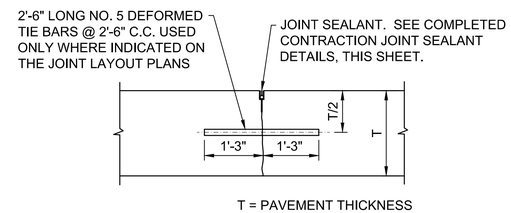

B3 DUMMY GROOVE CONTRACTION JOINT (TYPE H)

SCALE:NTS

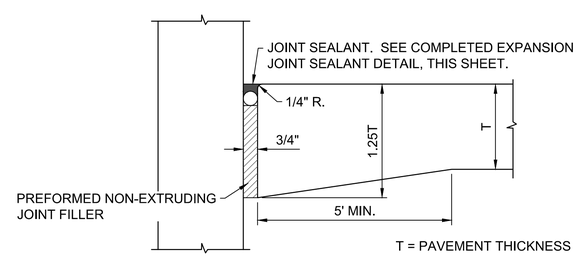

A3 THICKENED EDGE ISOLATION JOINT (TYPE B3)

SCALE:NTS

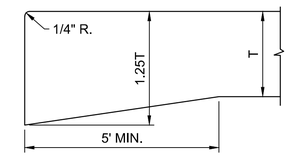

C4 THICKENED EDGE (TYPE TE)

SCALE:NTS

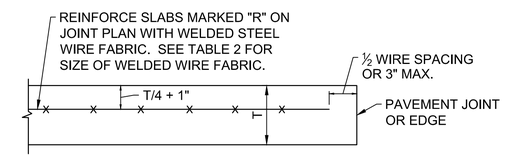

B4 SLAB REINFORCING DETAIL (TYPE R)

SCALE:NTS

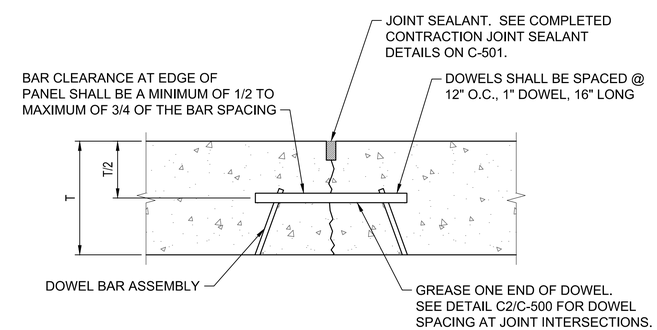

A4 DOWELED CONTRACTION JOINT (TYPE F)

US ARMY CORPS OF ENGINEERS
OMAHA DISTRICT

SYM.	DESCRIPTION	DATE	APPR.	SYM.	DESCRIPTION	DATE	APPR.

DESIGNED BY: J.J. LOPER
DWN BY: K. HUDNE
CKD BY: K.JENSEN
SUBMITTED BY: -
DATE: APRIL 2016
SOLICITATION NO.: W912BF-16-B-0007
CONTRACT NO.: -
FILE NUMBER: AF212-220
FILE NAME: M9A6C-501
SIZE: 34X22
PLOT SCALE: NTS
PLOT DATE: 4/22/2016

U.S. ARMY ENGINEER DISTRICT
CORPS OF ENGINEERS
OMAHA, NEBRASKA

BURNS & MCDONNELL
8201 NORMANDALE BLVD, SUITE #300
BLOOMINGTON, MN 55437
952-656-4003

FY15 P-341 CONSTRUCT ADDITION B1134
MINOT AFB, NORTH DAKOTA
PN: QUVF143101

PAVEMENT DETAILS (SHEET 2 OF 2)

SHEET IDENTIFICATION NUMBER
C-501

COPYRIGHT © 2016 BURNS & McDONNELL ENGINEERING COMPANY, INC.

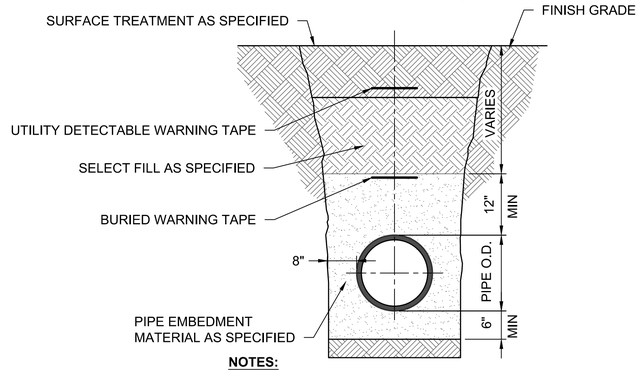

NOTES:

1. BOTTOM OF TRENCH AND BEDDING MATERIAL SHALL PROVIDE UNIFORM LONGITUDINAL SUPPORT FOR BOTTOM SECTION OF PIPE.
2. CITY OF MINOT STANDARD PVC BEDDING METHOD DETAIL CAN BE USED UPON APPROVAL FROM CONTRACTING OFFICER.

C1 UTILITY TRENCH DETAIL

SCALE:NTS

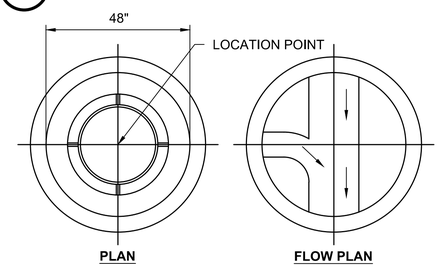

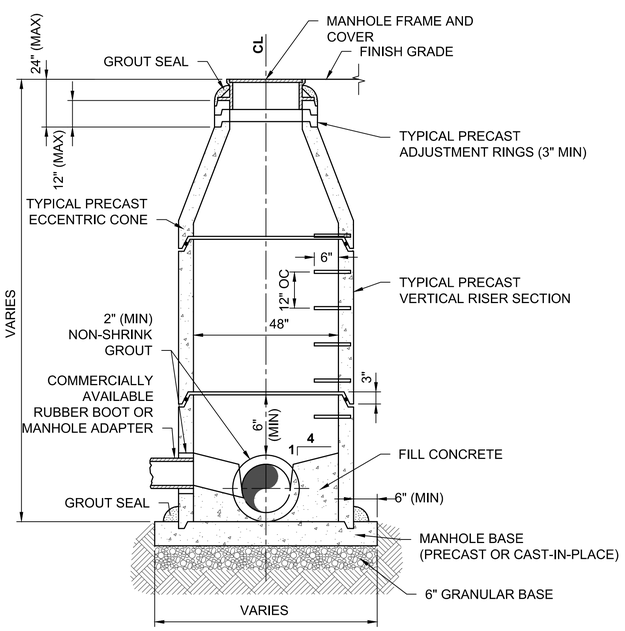

MANHOLE NOTES:

1. ALL PRECAST MANHOLE SECTIONS SHALL CONFORM TO ASTM C478.
2. ALL UTILITY STRUCTURES ARE TO BE H-20 RATED UNLESS INDICATED OTHERWISE.
3. IF A MANHOLE IS LOCATED IN PAVEMENT AREAS, RIM ELEVATION SHALL BE FLUSH WITH FINAL GRADE. IF A MANHOLE IS LOCATED OUTSIDE OF PAVEMENT AREAS, RIM ELEVATION SHALL BE 6.00" MINIMUM ABOVE ADJACENT FINISH GRADE.
4. COVERS AND CASTINGS OF MANHOLES AND STRUCTURES SHALL BE STAMPED PER THE APPROPRIATE UTILITY TYPE OR PER THE LOCAL STANDARDS, AND SHALL BE STAMPED PER THE ORIGIN OF MANUFACTURE.
5. COVERS AND CASTINGS SHALL BE TAMPER-PROOF FOR STRUCTURES LOCATED IN PEDESTRIAN AREAS, EASEMENT AREAS, AND AREAS WITH SPECIAL SECURITY RESTRICTIONS.
6. COVERS THAT MAY BE SUBMERGED SHALL BE WATERTIGHT.
7. FRAME AND ADJUSTMENT RINGS SHALL BE SEALED WITH NON-SHRINK GROUT, PREFORMED PLASTIC, OR RUBBER RING TO FORM WATERTIGHT SEAL.
8. ALL JOINTS SHALL BE SEALED WITH JOINT COMPOUND OR GROUTED WITH MORTAR.
9. ANY LIFT LOOPS FOR UTILITY STRUCTURES SHALL BE GROUTED FLUSH AFTER INSTALLATION.
10. ALL MANHOLE BASES (PRECAST OR CAST-IN-PLACE) SHALL HAVE #4 @ 12" ON CENTER EACH WAY REINFORCEMENT.
11. ALL REINFORCEMENT SHALL BE PLACED 2" CLEAR OF NEAREST FACE OF CONCRETE UNLESS INDICATED OTHERWISE.
12. IF MANHOLES ARE INDICATED ON SANITARY LINES, A 2.00 INCH DROP IN ELEVATION BETWEEN THE INCOMING AND OUTGOING SEWER SHALL BE PROVIDED IN EACH MANHOLE UNLESS INDICATED OTHERWISE. INVERT FLOW CHANNELS SHALL BE CONSTRUCTED TO PROVIDE SMOOTH AND UNIFORM SLOPE WITH GRADUAL TRANSITION SECTIONS.
13. PIPE MAY EXTEND 2.00" MAXIMUM BEYOND INTERIOR MANHOLE WALL.
14. MANHOLE STEPS SHALL BE PLACED INTO MANHOLE WALL DURING MANUFACTURE OR MORTARED INTO HOLES AFTER CONCRETE HAS CURED.
15. CITY OF MINOT STANDARD SANITARY SEWER MANHOLE DETAIL CAN BE USED UPON APPROVAL FROM CONTRACTING OFFICER.

C2 PRECAST CONCENTRIC MANHOLE

SCALE:NTS

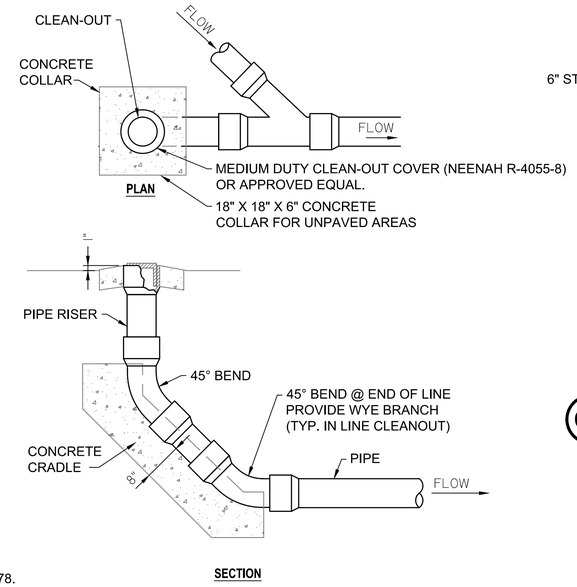

C3 CLEANOUT DETAIL

SCALE:NTS

NOTES:

1. CITY OF MINOT PVC SEWER LINE CLEANOUT DETAIL CAN BE USED UPON APPROVAL FROM CONTRACTING OFFICER.

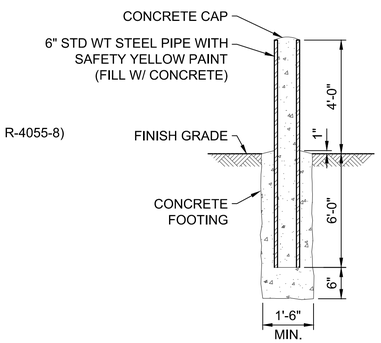

C5 BOLLARD DETAIL

SCALE:NTS

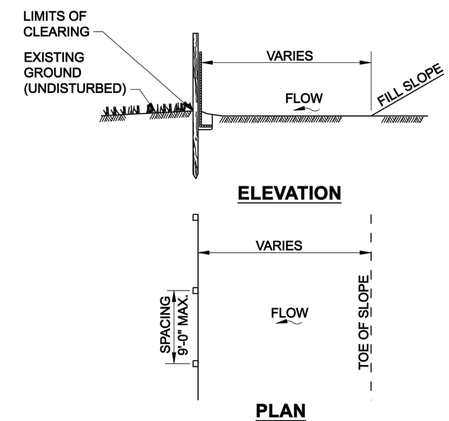

SILT FENCE INSTALLATION AT TOE OF FILL

NO SCALE

SILT FENCE NOTES:

1. POST SPACING SHOWN IS TYPICAL FOR SILT FENCE WITH SUPPORT MESH. SUPPORT MESH IS NOT REQUIRED FOR SILT FENCE AT TOE OF FILL IF POST SPACING IS 6 FEET MAXIMUM.

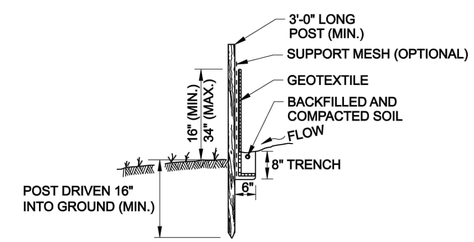

POST AND FABRIC INSTALLATION DETAIL

NO SCALE

SILT FENCE NOTES:

1. ALTERNATE PRE-ASSEMBLED SILT FENCE OPTIONS WILL BE ALLOWED AS LONG AS SPECIFIED DIMENSIONS ARE SATISFIED. FOLLOW MANUFACTURER'S INSTRUCTIONS FOR INSTALLATION PROCEDURES.

A4 SILT FENCE DETAIL

SCALE:NTS

US ARMY CORPS OF ENGINEERS
OMAHA DISTRICT

SYM.	DESCRIPTION	DATE	APPR.	SYM.	DESCRIPTION	DATE	APPR.

DESIGNED BY: A. JONES | DATE: APRIL 2016
DWN BY: K. HOONE | CKD BY: K. JENSEN | SOLICITATION NO.: W912BF-16-B-0007
SUBMITTED BY: - | CONTRACT NO.: -
FILE NAME: MI46C-502 | FILE NUMBER: AF212-220
SIZE: 34X22 | PLOT SCALE: NTS | PLOT DATE: 4/22/2016

U.S. ARMY ENGINEER DISTRICT CORPS OF ENGINEERS OMAHA, NEBRASKA

BURNS & McDONNELL 8200 NORMANDALE BLVD. SUITE #300 BLOOMINGTON, MN 55437 952-656-6003

FY15 P-341 CONSTRUCT ADDITION B1134 MINOT AFB, NORTH DAKOTA PN: QJVF143101

SITE AND UTILITY DETAILS

SHEET IDENTIFICATION NUMBER
C-502

COPYRIGHT © 2016 BURNS & McDONNELL ENGINEERING COMPANY, INC.

GENERAL NOTES:

1. GENERAL:
   A. THESE NOTES, AND OTHER DRAWING NOTES CONTAINED WITHIN, ARE PROVIDED TO MEET SPECIFIC REQUIREMENTS AND TO SUPPLEMENT THE CONTRACT SPECIFICATIONS. THESE NOTES NEITHER REPLACE NOR OVERRIDE THE PROVISIONS AND REQUIREMENTS OF THE CONTRACT SPECIFICATIONS.
   B. CONTRACTOR SHALL COORDINATE ALL STRUCTURAL WORK WITH WORK SHOWN ON ALL OTHER DRAWINGS.
   C. CONTRACTOR SHALL VERIFY ALL DIMENSIONS OF EXISTING CONSTRUCTION AND REPORT ANY DISCREPANCIES FROM THE CONTRACT DRAWINGS TO THE CONTRACTING OFFICER PRIOR TO COMMENCING WITH WORK. SCALING OF WORKING DIMENSIONS FROM THE STRUCTURAL DRAWINGS IS PROHIBITED.
   D. CONTRACT DRAWINGS AND SPECIFICATIONS REPRESENT THE FINISHED STRUCTURE. CONTRACTOR SHALL BE RESPONSIBLE FOR ALL MEANS AND METHODS OF CONSTRUCTION INCLUDING, BUT NOT LIMITED TO, SHORING AND TEMPORARY BRACING. CONTRACTOR SHALL UNDERTAKE ALL NECESSARY MEASURES TO ENSURE SAFETY OF ALL PERSONS AND STRUCTURES AT THE SITE AND ADJACENT TO THE SITE. VISITS TO THE SITE BY THE CONTRACTING OFFICER'S REPRESENATIVE SHALL NOT RELIEVE THE CONTRACTOR OF SUCH RESPONSIBILITY.
   E. IF CERTAIN FEATURES ARE NOT FULLY SHOWN OR CALLED FOR ON THE CONTRACT DRAWINGS OR SPECIFICATIONS, THEIR CONSTRUCTION SHALL BE OF THE SAME CHARACTER AS FOR SIMILAR CONDITIONS THAT ARE SHOWN OR CALLED FOR, WITH THE APPROVAL OF THE CONTRACTING OFFICER'S REPRESENTATIVE. WHERE SECTIONS VARY, CONTRACTOR SHALL PROVIDE FOR SMOOTH TRANSITIONS BETWEEN THEM, UNLESS NOTED OTHERWISE.
   F. ALL PRODUCTS SHALL BE INSTALLED IN ACCORDANCE WITH THE MANUFACTURERS' WRITTEN INSTRUCTIONS AND RECOMMENDATIONS, UNLESS NOTED OTHERWISE.
   G. ELEVATION 100'-0" CORRESPONDS TO MSL ELEVATION 1635.0 FT, UNO.
2. DESIGN STANDARDS
   A. PRINCIPAL CODE OF RECORD: UFC 1-200-01, UNIFIED FACILITIES CRITERIA (UFC), DESIGN: GENERAL BUILDING REQUIREMENTS, 1 JULY 2013.
   B. INTERNATIONAL BUILDING CODE 2012.
   C. ASCE 7, MINIMUM DESIGN LOADS FOR BUILDINGS AND OTHER STRUCTURES, 2010.
   D. ACI 318, BUILDING CODE REQUIREMENTS FOR STRUCTURAL CONCRETE, 2011.
   E. ACI 530/ASCE 5/TMS 402, BUILDING CODE REQUIREMENTS FOR MASONRY STRUCTURES, 2011.
   F. AISC STEEL CONSTRUCTION MANUAL, 14th EDITION, 2010.
   G. AISI COLD-FORMED STEEL DESIGN MANUAL, 2010.
   H. AWS D1.1/1.1M. 2010
   I. OSHA 29 CFR 1926 SUBPART R - STEEL ERECTION.
3. SPECIAL INSPECTIONS: SEE S-004 AND S-005 FOR STATEMENT OF SPECIAL INSPECTIONS.
   A. THIS "STATEMENT OF SPECIAL INSPECTIONS" HAS BEEN PREPARED IN ACCORDANCE WITH IBC 2012, SECTION 1704.
   B. CONTRACTOR SHALL RETAIN PRE-COORDINATED AND GOVERNMENT-APPROVED THIRD-PARTY QUALITY ASSURANCE AGENCIES TO PROVIDE SPECIAL INSPECTIONS DURING CONSTRUCTION IN ACCORDANCE WITH IBC 2012, CHAPTER 17.
   C. IN ACCORDANCE WITH IBC SECTION 1704.4, CONTRACTOR RESPONSIBLE FOR THE CONSTRUCTION OF THE MAIN WIND OR SEISMIC-FORCE-RESISTING SYSTEM SHALL SUBMIT A WRITTEN STATEMENT OF RESPONSIBILITY TO THE CONTRACTING OFFICER'S REPRESENTATIVE PRIOR TO COMMENCEMENT OF WORK ON THE SYSTEM.
   D. CONTRACTOR SHALL RETAIN THE SERVICES OF A SPECIAL INSPECTOR OF RECORD (SIOR) IN ACCORDANCE WITH UFC 3-301-01 SECTION 2-2.3.3 1704.6. SIOR SHALL BE A LICENSED PROFESSIONAL ENGINEER IN A STATE ACCEPTABLE TO THE CONTRACTING OFFICER'S REPRESENATIVE, AND SHALL SUBMIT QUALIFICATIONS ACCEPTABLE TO THE CONTRACTING OFFICER'S REPRESENATIVE.
   E. EACH SPECIAL INSPECTOR SHALL BE A QUALIFIED PERSON WHO SHALL DEMONSTRATE COMPETENCE, TO THE SATISFACTION OF THE CONTRACTING OFFICER'S REPRESENTATIVE, FOR INSPECTION OF THE PARTICULAR TYPE OF CONSTRUCTION OR OPERATION REQUIRING SPECIAL INSPECTION.
   F. SPECIAL INSPECTION AGENCY SHALL SUBMIT INSPECTION REPORTS DURING CONSTRUCTION FOR VERIFICATION, INCLUDING FINAL REPORTS IN ACCORDANCE WITH IBC 2012, SECTION 1704.1.2.
   G. SPECIAL INSPECTOR SHALL USE THE LATEST ISSUE OF THE STRUCTURAL DRAWINGS FOR ALL INSPECTIONS. SHOP FABRICATION DRAWINGS SHALL NOT BE USED FOR SUCH PURPOSES.
   H. THE TABLES SHOWN ON S-004 IDENTIFY THE MATERIALS, SYSTEMS, AND COMPONENTS FOR WHICH SPECIAL INSPECTION IS REQUIRED. "X" INDICATES THE REQUIRED FREQUENCY OF INSPECTION AS DEFINED BY THE IBC 2012, SECTION 1702.
4. TESTING REQUIREMENTS:
   A. CONTRACTOR SHALL RETAIN PRE-COORDINATED AND GOVERNMENT-APPROVED THIRD-PARTY TESTING AGENCIES TO PROVIDE STRUCTURAL TESTING DURING CONSTRUCTION IN ACCORDANCE WITH IBC 2012, CHAPTER 17.
   B. TESTING AGENCY SHALL SUBMIT TEST RESULTS DURING CONSTRUCTION FOR VERIFICATION INCLUDING A FINAL REPORT IN ACCORDANCE WITH IBC 2012, SECTION 1704.2.4.
   C. TABLES ON S-004 AND S-005 IDENTIFY THE STRUCTURAL TESTS REQUIRED FOR THIS PROJECT.
5. STRUCTURAL OBSERVATIONS:
   A. CONTRACTOR SHALL RETAIN PRE-COORDINATED AND GOVERNMENT-APPROVED THIRD-PARTY REGISTERED DESIGN PROFESSIONALS TO PROVIDE STRUCTURAL OBSERVATIONS DURING CONSTRUCTION IN ACCORDANCE WITH IBC 2012, SECTION 1704.5.
   B. EACH STRUCTURAL OBSERVER SHALL SUBMIT WRITTEN STATEMENTS IDENTIFYING FREQUENCY AND EXTENT OF STRUCTURAL OBSERVATIONS AND ANY REPORTED DEFICIENCIES WHICH HAVE NOT BEEN RESOLVED IN ACCORDANCE WITH IBC 2012, SECTION 1704.5.
6. DESIGN LOADS
   A. OCCUPANCY CLASSIFICATION : CATEGORY II PER UFC 3-301-01.
   B. LIVE LOADS PER UFC 3-301-01
      1. FLOOR LIVE LOAD: 100 PSF OR A CONCENTRATED LOAD OF 2,000 POUNDS UNIFORMLY DISTRIBUTED OVER AN AREA 2.5 FT SQUARE.
      2. ROOF LIVE LOAD: 20 PSF.
      3. FLOOR AND ROOF LIVE LOAD REDUCTION IS NOT PERMITTED PER UFC 3-301-01.
      4. MONORAIL: 3 TON
   C. COLLATERAL LOADS: 12 PSF
   D. EQUIPMENT LOADS
      1. AS INDICATED FOR EQUIPMENT WEIGHING IN EXCESS OF 250 LBS. FRAMING AND FOUNDATIONS ARE DESIGNED FOR EQUIPMENT WHICH SATISFIES THE CONTRACT SPECIFICATIONS.
      2. IF EQUIPMENT FURNISHED IS HEAVIER THAN THE WEIGHTS INDICATED, OR REQUIRES STRUCTURAL CHANGES FOR ANY OTHER REASON, CONTRACTOR SHALL PROVIDE ENGINEERING DESIGN CALCULATIONS AND ADDITIONAL STRUCTURAL WORK NECESSARY TO SUPPORT ALL LOADS IN ACCORDANCE WITH THE DESIGN STANDARDS SPECIFIED ABOVE, AT NO ADDITIONAL COST TO THE OWNER AND WITH NO INCREASE IN CONTRACT TIME.
   E. SNOW LOAD PER UFC 3-301-01
      1. GROUND SNOW LOAD: 40 PSF.
      2. FLAT-ROOF SNOW LOAD: 40 PSF.
      3. EXPOSURE FACTOR: 0.9.
      4. IMPORTANCE FACTOR: 1.0.
      5. THERMAL FACTOR: 1.0.
   F. WIND LOAD PER UFC 3-301-01
      1. BASIC WIND SPEED: 115 MPH 3-SECOND GUST.
      2. IMPORTANCE FACTOR: 1.0.
      3. EXPOSURE CATEGORY: C.
      4. BUILDING CONDITION: ENCLOSED.
      5. TOPOGRAPHIC FACTOR: 1.0.
      6. WALL COMPONENTS AND CLADDING, SHALL BE DESIGNED FOR THE FOLLOWING UNFACTORED SERVICE WIND LOADS, UNLESS NOTED OTHERWISE:
         a. WITHIN 8'-0" OF CORNERS: 13.8 PSF INWARD, 16.4 PSF OUTWARD
         b. GREATER THAN 8'-0" FROM CORNERS: 13.8 PSF INWARD, 15.2 PSF OUTWARD
         c. AT PARAPETS WITHIN 8'-0" FROM CORNERS: 63.6 PSF INWARD, 92.6 PSF OUTWARD
         d. AT PARAPETS GREATER THAN 8'-0" FROM CORNERS: 44.8 PSF INWARD, 74.0 PSF OUTWARD
      7. ROOF COMPONENTS AND CLADDING SHALL BE DESIGNED FOR THE FOLLOWING UNFACTORED SERVICE WIND LOADS, UNLESS NOTED OTHERWISE:
         a. WITHIN 8'-0" OF CORNERS: 9.6 PSF INWARD, 46.3 PSF OUTWARD
         b. WITHIN 8'-0" OF EDGES: 9.6 PSF INWARD, 30.8 PSF OUTWARD
         c. GREATER THAN 8'-0" FROM EDGES: 9.6 PSF INWARD, 18.4 PSF OUTWARD
   G. SEISMIC LOAD PER UFC 3-301-01
      1. MAXIMUM CONSIDERED EARTHQUAKE SPECTRAL RESPONSE ACCELERATIONS Ss = 0.05, S1 = 0.02.
      2. DESIGN EARTHQUAKE SPECTRAL RESPONSE ACCELERATIONS Sds = 0.08, Sd1 = 0.04.
      3. IMPORTANCE FACTOR: 1.0.
      4. SITE CLASS: D.
      5. SEISMIC DESIGN CATEGORY: A.
      6. BASIC SEISMIC FORCE RESISTING SYSTEM: ORDINARY REINFORCED CONCRETE SHEAR WALLS.
      7. RESPONSE MODIFICATION COEFFICIENT: R = 4.
      8. ANALYSIS PROCEDURE: EQUIVALENT LATERAL FORCE.
   H. ICE LOAD PER UFC 3-301-01 (FOR ESTIMATING LIGHTNING PROTECTION POLE REACTIONS)
      1. 0.50 INCH EQUIVALENT RADIAL ICE THICKNESS DUE TO FREEZING RAIN WITH CONCURRENT 60 MPH 3-SECOND GUST WIND SPEED FOR 50-YEAR MEAN RECURRENCE INTERVAL.
      2. IMPORTANCE FACTOR: 1.25
      3. LIGHTNING PROTECTION POLE HEIGHTS
         a. 76 FEET
         b. 40 FEET
7. GEOTECHNICAL INFORMATION
   A. SOURCE: REPORT OF GEOTECHNICAL EXPLORATION, PREPARED BY MATERIAL TESTING SERVICES, LLC.
   B. SITE PREPARATION
      1. EXCAVATION, FILL, AND BACKFILL SHALL BE IN ACCORDANCE WITH THE CONTRACT DRAWINGS AND SPECIFICATIONS, DIVISION 310000.
      2. CONTRACTOR SHALL NOTIFY THE CONTRACTING OFFICER'S REPRESENTATIVE WHEN LOOSE OR SOFT SOILS ARE EXPOSED WHERE SLABS, MATS, OR FOOTINGS ARE TO BE PLACED SO THAT A DETERMINATION MAY BE MADE REGARDING IMPROVEMENT OF THIS POTENTIALLY UNDESIRABLE CONDITION.
   C. SOIL CHARACTERISTICS
      1. WATER TABLE DEPTH: 6 FT.
   D. LATERAL EARTH PRESSURE
      1. PASSIVE CONDITION, Kp: 375 PCF, EQUIVALENT FLUID (ULTIMATE).
   E. SLAB AND FOOTING DESIGN PARAMETERS
      1. MODULUS OF SUBGRADE REACTION: 150 PCI.
      2. ALLOWABLE BEARING CAPACITIES
         a. GRAVITY LOADS: 2000 PSF.
      3. FROST DEPTH: 72"
      4. CONCRETE-SOIL COEFFICIENT OF FRICTION: 0.35 (ULTIMATE).
      5. MINIMUM STABILITY FACTORS OF SAFETY
         a. OVERTURNING: 1.5.
         b. UPLIFT: 1.5.
         c. SLIDING: 1.5.
   F. LIGHTNING PROTECTION POLE FOUNDATION
      1. ASSUMED LATERAL SOIL BEARING PRESSURE: 100 PSF/FT PER IBC 2012 TABLE 1806.2
8. MATERIALS: SEE THE CONTRACT SPECIFICATIONS FOR COMPLETE REQUIREMENTS AND COMPLY WITH ALL APPLICABLE OSHA REGULATIONS
   A. REINFORCED CONCRETE: SECTIONS 031113.0010, 031500.0010, 032000.0010, 033000.0010, 033500.0010, 033900.0010.
      1. REINFORCED CONCRETE SHALL BE PREPARED AND PLACED IN ACCORDANCE WITH ACI MANUAL OF CONCRETE PRACTICE.
      2. CONCRETE
         a. UNLESS NOTED OTHERWISE: MINIMUM 28-DAY COMPRESSIVE STRENGTH f'c = 4500 PSI, NORMAL WEIGHT.
         b. INTERIOR SLABS ON GRADE SHALL NOT HAVE AIR ENTRAINMENT.
         c. SEE PLAN FOR SLAB THICKNESS AND REINFORCEMENT.
         d. PROVIDE #4 X 3'-0" DIAGONAL BAR AT ALL REENTRANT CORNERS (TYPICAL).
      3. SLAB-ON-GRADE SHALL BE PLACED ON 10 MIL VAPOR BARRIER ON 6" SELECT GRANULAR FILL PER SPEC SECTION 310000.
      4. FORMWORK
         a. CONTRACTOR SHALL BE RESPONSIBLE FOR DESIGN, ENGINEERING, STRUCTURAL ADEQUACY, AND CONSTRUCTION OF ALL CONCRETE FORMWORK IN ACCORDANCE WITH THE CONTRACT SPECIFICATIONS.
         b. COORDINATE ALL CONCRETE WORK WITH THE PLACEMENT OF PIPING, INSERTS, FLOOR DRAINS, AND OTHER EMBEDDED ITEMS INDICATED ON THE CONTRACT DRAWINGS OR IN THE CONTRACT SPECIFICATIONS.
         c. ALL NEW OR EXISTING PIPING OR UTILITIES PASSING THROUGH NEW CONCRETE SHALL BE SLEEVED 1/2" CLEAR ALL AROUND, UNLESS NOTED OTHERWISE. SEE OTHER DISCIPLINE DRAWINGS FOR SLEEVE DETAILS. CONTRACTOR SHALL PROVIDE MEASURES TO ENSURE THAT SLEEVES REMAIN FREE OF DEBRIS AND WATER DURING CONSTRUCTION.
         d. PROVIDE 3/4" CHAMFER STRIPS ON ALL EDGES OF EXPOSED CONCRETE, UNLESS NOTED OTHERWISE.
         e. WITH THE EXPLICIT PRIOR APPROVAL IN WRITING OF THE CONTRACTING OFFICER, COLUMN AND WALL FOOTINGS MAY BE EARTH-FORMED USING UNDISTURBED NATIVE SOIL. PROVIDE A MINIMUM EXCAVATION WIDTH 4" GREATER THAN INDICATED, AND A DEPTH 2" GREATER THAN INDICATED.
      5. REINFORCING STEEL
         a. BARS: ASTM A615 GRADE 60, UNO.
         b. WELDED WIRE FABRIC: ASTM A185.
         c. ALL CONCRETE SHALL BE REINFORCED UNLESS SPECIFICALLY MARKED "NOT REINFORCED" OR "UNREINFORCED".
         d. CONTRACTOR SHALL DETAIL AND PLACE ALL REINFORCEMENT IN ACCORDANCE WITH ACI SP-66, ACI 301, ACI 318, AND CRSI MANUAL OF STANDARD PRACTICE.
         e. MINIMUM CONCRETE CLEAR COVER OVER REINFORCEMENT SHALL BE AS FOLLOWS, UNLESS NOTED OTHERWISE:
            (1) CONCRETE CAST AGAINST AND PERMANENTLY EXPOSED TO EARTH: 3".
            (2) CONCRETE EXPOSED TO EARTH OR WEATHER: #6 THROUGH #11 BARS - 2"; #5 AND SMALLER BARS, WELDED WIRE FABRIC - 1 1/2".
            (3) CONCRETE NOT EXPOSED TO WEATHER OR IN CONTACT WITH THE GROUND: SLABS AND WALLS - 3/4"; BEAMS AND COLUMNS, PRIMARY REINFORCEMENT, TIES, STIRRUPS, SPIRALS - 1 1/2".
         f. EMBEDMENT AND LAP SPLICE LENGTHS FOR ALL REINFORCING STEEL BARS SHALL CONFORM TO THE FOLLOWING PROVISIONS, UNLESS NOTED OTHERWISE.
            (1) MINIMUM STRAIGHT EMBEDMENT LENGTHS:

#3 - 12"	#6 - 18"	#9 - 36"
#4 - 12"	#7 - 25"	#10 - 44"
#5 - 15"	#8 - 29"	#11 - 53"

            (2) MINIMUM LAP SPLICE LENGTHS:

#3 - 12"	#6 - 23"	#9 - 46"
#4 - 15"	#7 - 33"	#10 - 57"
#5 - 19"	#8 - 37"	#11 - 68"

            (3) MINIMUM HOOK EMBEDMENT LENGTHS:

#3 - 8"	#6 - 15"	#9 - 22"
#4 - 10"	#7 - 17"	#10 - 25"
#5 - 12"	#8 - 19"	#11 - 27"

            (4) HORIZONTAL BARS HAVING MORE THAN 12" OF CONCRETE PLACED BELOW THEM SHALL BE CONSIDERED TOP REINFORCEMENT AND SHALL HAVE MINIMUM STRAIGHT EMBEDMENT AND LAP SPLICE LENGTHS INCREASED BY NOT LESS THAN 30% OVER THOSE GIVEN ABOVE.
            (5) HOOK EMBEDMENT IS THE MINIMUM STRAIGHT LINE DISTANCE FROM THE CRITICAL SECTION OF THE BAR TO THE FARTHEST EDGE OF THE HOOK.
            (6) EPOXY GROUT: CONFORM TO ASTM C881, TYPE IV, GRADE 3, EXCEPT GEL TIMES. PROVIDE MINIMUM EMBEDMENT LENGTH REQUIRED TO DEVELOP ULTIMATE STRENGTH OF BAR.
         g. PROVIDE ADDITIONAL REINFORCEMENT AT ALL OPENINGS AND CORNER BARS AT ALL INTERSECTING GRADE BEAMS, WALLS, AND CURBS IN ACCORDANCE WITH THE STANDARD DETAILS ON S-301, UNLESS NOTED OTHERWISE.
      6. JOINTS
         a. LOCATE ALL CONSTRUCTION, CONTRACTION, ISOLATION, EXPANSION, AND OTHER JOINTS AS INDICATED OR SPECIFIED, OR OTHERWISE APPROVED BY THE CONTRACTING OFFICER.
         b. SURFACES OF ALL HORIZONTAL AND VERTICAL CONSTRUCTION JOINTS SHALL BE CLEANED OF LAITANCE AND SHALL EXPOSE CLEAN COARSE AGGREGATE SOLIDLY EMBEDDED IN MORTAR MIX. JUST PRIOR TO DEPOSITING CONCRETE, SURFACE OF CONSTRUCTION JOINT SHALL BE THOROUGHLY CLEANED AND WETTED.
         c. THESE PROVISIONS SHALL ALSO APPLY WHEN NEW CONCRETE IS PLACED AGAINST EXISTING CONCRETE. IN ADDITION, EXISTING CONCRETE SURFACE SHALL BE ADEQUATELY PREPARED BY APPLICATION OF A BONDING AGENT.

US ARMY CORPS OF ENGINEERS
OMAHA DISTRICT

SYM.	DATE	DESCRIPTION	APPR.	SYM.	DATE	DESCRIPTION	APPR.

U.S. ARMY ENGINEER DISTRICT
CORPS OF ENGINEERS
OMAHA, NEBRASKA

BURNS & McDONNELL
8201 NORMAN CENTER DR. #300
BLOOMINGTON, MN 55437
952-656-6003

DESIGNED BY: ESB	DATE: APRIL 2016
DWN BY: CGM	CKD BY: BBB	SOLICITATION NO.: W912BF-16-B-0007
SUBMITTED BY: -	CONTRACT NO.: -
FILE NAME: M/A/S-001	FILE NUMBER: AF212-220
SIZE: 34X22	PLOT SCALE: AS INDICATED	PLOT DATE: 4/22/16

FY15 P-341 CONSTRUCT ADDITION B1134
MINOT AFB, NORTH DAKOTA
PN: QJVF143101

GENERAL NOTES - SHEET 1

SHEET IDENTIFICATION NUMBER
S-001

4/22/2016 1:59:17 PM
COPYRIGHT © 2016 BURNS & McDONNELL ENGINEERING COMPANY, INC.

8. MATERIALS (CONTINUED):
   B. STRUCTURAL AND MISCELLANEOUS STEEL: SECTIONS 051200, 055013
      1. STRUCTURAL AND MISCELLANEOUS STEEL SHALL BE FABRICATED AND ERECTED IN ACCORDANCE WITH AISC STEEL CONSTRUCTION MANUAL, 14th EDITION.
      2. TEMPORARY ERECTION BRACING SHALL BE DESIGNED AND PROVIDED BY THE CONTRACTOR AS REQUIRED AND SHALL NOT BE REMOVED UNTIL ALL PERMANENT LATERAL-LOAD-RESISTING ELEMENTS AND CONNECTIONS ARE COMPLETELY INSTALLED.
      3. WIDE FLANGE SHAPES AND TEES: ASTM A992, Fy = 50 KSI.
      4. OTHER SHAPES, PLATES, AND THREADED RODS
         a. ASTM A36, Fy = 36 KSI, UNLESS NOTED OTHERWISE.
         b. ASTM A572 GRADE 50, Fy = 50 KSI, WHERE INDICATED AS "(50)".
      5. SQUARE AND RECTANGULAR HOLLOW STRUCTURAL SECTIONS: ASTM A500 GRADE B, Fy = 46 KSI.
      6. PIPE: ASTM A53 TYPE E OR S, GRADE B, Fy = 35 KSI.
      7. BOLTS
         a. 3/4" DIAMETER ASTM A325, UNLESS NOTED OTHERWISE.
         b. FRAMING CONNECTIONS: PRETENSIONED JOINTS WITH STANDARD HOLES, UNLESS NOTED OTHERWISE.
      8. WELDING: IN ACCORDANCE WITH AWS D1.1 USING E70 ELECTRODE, WITH LOW HYDROGEN WHERE REQUIRED.
      9. HEADED STUDS
         a. COLD-FINISHED STEEL CONFORMING TO ASTM A108, GRADE 1015 OR 1020.
      10. ANCHOR BOLTS
         a. ASTM F1554 GRADE 36.
         b. LOCATE ANCHOR BOLTS ACCURATELY, SET WITH TEMPLATES, AND SECURELY HOLD IN POSITION WHILE PLACING CONCRETE. PROTECT IN-PLACE ANCHOR BOLTS FROM CONSTRUCTION ACTIVITY.
         c. THE FOLLOWING ARE PROHIBITED WITHOUT THE EXPLICIT PRIOR APPROVAL IN WRITING OF THE STRUCTURAL ENGINEER OF RECORD:
            (1) INSERTING ANCHOR BOLTS INTO FRESH OR PARTIALLY HARDENED CONCRETE.
            (2) SUBSTITUTING POST-INSTALLED ANCHORS WHERE EMBEDDED ANCHOR BOLTS ARE INDICATED.
            (3) REPAIRING, REPLACING, OR MODIFYING INSTALLED ANCHOR BOLTS.
      11. POST-INSTALLED ANCHORS: BASIS OF DESIGN IS HILTI HIT HY 200 OR APPROVED EQUAL. ALL POST-INSTALLED ANCHORS SHALL COMPLY WITH IBC 2012.
      12. GROUT: CEMENTITIOUS NONSHRINK.
   C. STEEL JOISTS: SECTION 05 21 00
      1. STEEL JOISTS, BRIDGING, AND ACCESSORIES SHALL BE DESIGNED, FABRICATED, AND ERECTED IN ACCORDANCE WITH SJI SPECIFICATIONS.
      2. JOISTS CALLED OUT ON THE CONTRACT DRAWINGS ARE SIZED FOR EQUIVALENT UNIFORM GRAVITY LOADS ONLY. SUPPLIER SHALL FURTHER DESIGN AND MODIFY JOISTS AS REQUIRED FOR ALL ADDITIONAL DISTRIBUTED AND CONCENTRATED DEAD, LIVE, WIND (INCLUDING UPLIFT), SNOW (INCLUDING DRIFT), AND OTHER LOADS INDICATED ON THE CONTRACT DRAWINGS OR OTHERWISE PROVIDED BY EQUIPMENT VENDORS.
      3. ALL JOISTS SHALL BE CAPABLE OF SUPPORTING A 300 LB CONCENTRATED LOAD AT ANY POINT ALONG THE TOP OR BOTTOM CHORD IN ADDITION TO ALL OTHER LOADS INDICATED OR SPECIFIED.
      4. JOISTS SHALL BE ATTACHED TO SUPPORTING STRUCTURAL MEMBERS OR BEARING PLATES USING A MINIMUM 3/16" x 1 1/2" LONG FIELD FILLET WELD OR 1/2" DIAMETER ASTM A325-ST BOLT ON EACH SIDE OF THE JOIST SEAT, UNLESS NOTED OTHERWISE. BOLTS SHALL BE USED FOR ALL NON-PANELIZED JOISTS OF 40 FT OR GREATER SPAN.
      5. JOISTS SUPPORTING STEEL DECK SHALL BE INSTALLED TO PROVIDE A FLAT PLANE FOR DECK ATTACHMENT. JOIST MODIFICATIONS AND SHIMS SHALL BE PROVIDED AS REQUIRED.
      6. THE FOLLOWING ARE PROHIBITED WITHOUT THE EXPLICIT PRIOR APPROVAL IN WRITING OF THE STRUCTURAL ENGINEER OF RECORD:
         a. CHANGE OF JOIST DEPTH FROM THAT INDICATED.
         b. USE OF BOLTS LARGER THAN 1/2" DIAMETER FOR JOIST ATTACHMENT.
         c. ANY MODIFICATION OF JOISTS NOT DISCUSSED ABOVE.
   D. STEEL DECK: SECTION 053000
      1. STEEL DECK, ATTACHMENTS, AND ACCESSORIES SHALL BE DESIGNED, FABRICATED, AND INSTALLED IN ACCORDANCE WITH SDI MANUALS AND AISI COLD-FORMED STEEL DESIGN MANUAL.
      2. ROOF DECK
         a. 1 1/2", 20 GAGE, WIDE RIB WITH Fy = 33 KSI, Imin = 0.201 IN^4/FT, Smin = 0.234 IN^3/FT, GALVANIZED G90, TYP UNO.
      3. ALL STEEL DECK AND DECK ATTACHMENTS SHALL BE CAPABLE OF RESISTING THE WIND UPLIFT LOADS INDICATED ON THE CONTRACT DRAWINGS AND A SERVICE DIAPHRAGM SHEAR OF 195 PLF.
      4. ALL STEEL DECK SHALL CROSS A MINIMUM OF TWO SPANS. MINIMUM LENGTH OF END LAPS AND BEARING AT ALL SUPPORTS SHALL BE 2".
      5. ALL STEEL DECK SHALL BE SUPPORTED AT EDGES OF OPENINGS. ADDITIONAL SUPPORT STEEL SHALL BE PROVIDED BY CONTRACTOR AS REQUIRED AND FABRICATED SO THAT DECK RUNS CONTINUOUSLY OVER MINOR OPENINGS, WHICH SHALL NOT BE CUT UNTIL NEEDED BY OTHER TRADES.
      6. MINIMUM STEEL DECK ATTACHMENT SHALL BE AS FOLLOWS:
         a. DECK SHALL BE FASTENED AT EACH END AND AT INTERMEDIATE SUPPORTS BY 5/8" DIAMETER PUDDLE WELDS, 36/4 PATTERN.
         b. SIDE LAP CONNECTIONS SHALL BE MADE AT SEAMS USING #10 SCREWS, 5 PER SPAN.
         c. CONNECTIONS ALONG SIDE BOUNDARIES, RIDGE PLATES, AND ROOF SUB FRAMING SHALL BE MADE AT 12" ON CENTER MAXIMUM.
         d. PNEUMATIC FASTENERS AND/OR SCREWS SHALL NOT BE SUBSTITUTED WHERE WELDS ARE SPECIFIED, BUT MAY BE USED IN TEMPORARY ATTACHMENT OF STEEL DECK.
      7. ACCESSORY PLATES (RIDGES, VALLEYS, ETC) SHALL HAVE A MINIMUM THICKNESS OF 0.0359 IN.
      8. NOTHING SHALL BE HUNG FROM THE ROOF DECK UNLESS APPROVED IN WRITING BY THE STRUCTURAL ENGINEER OF RECORD.
   E. COLD-FORMED STEEL FRAMING: SECTION 054000
      1. COLD-FORMED STEEL FRAMING SHALL BE DESIGNED, FABRICATED, AND ERECTED IN ACCORDANCE WITH AISI COLD-FORMED STEEL DESIGN MANUAL AND SSMA PUBLICATIONS AS APPLICABLE.
      2. SUPPLIER SHALL DESIGN AND DETAIL ALL ENGINEERED COLD-FORMED METAL FRAMING ELEMENTS, INCLUDING MEMBERS FOR WHICH SIZES ARE NOT INDICATED ON THE DRAWINGS AND ANY TEMPORARY AND PERMANENT BRACING, FOR LOADS BASED ON THE CRITERIA GIVEN ON DRAWING S-001.
      3. SHAPE DESIGNATIONS
         a. STUDS, JOISTS, TRACK, CHANNELS, AND FURRING CHANNELS: PER SSMA PRODUCT TECHNICAL INFORMATION, INDICATING MEMBER DEPTH, STYLE, FLANGE WIDTH, AND MATERIAL THICKNESS.
      4. FRAMING MEMBERS
         a. ASTM A653 GRADE 33, Fy = 33 KSI, UNLESS NOTED OTHERWISE.
         b. ASTM A653 GRADE 50, Fy = 50 KSI, FOR MATERIAL THICKNESS 54 MILS OR GREATER AND WHERE INDICATED AS "(50)".
      5. FINISH: HOT-DIP GALVANIZE TO PROVIDE A COATING CLASS OF G90.
      6. MECHANICAL FASTENERS: CORROSION-RESISTANT-COATED, SELF-DRILLING, SELF-THREADING STEEL DRILL SCREWS WITH LOW PROFILE HEADS BENEATH SHEATHING AND MANUFACTURER'S STANDARD HEADS ELSEWHERE.
      7. WELDING: IN ACCORDANCE WITH AWS D1.1 OR D1.3, AS APPLICABLE.
      8. ALL END CONNECTIONS FOR EXTERIOR STUDS SHALL BE DESIGNED FOR A FACTORED HORIZONTAL FORCE PERPENDICULAR TO THE PLANE OF THE WALL AND EQUAL TO THE REACTIONS DUE TO A UNIFORMLY DISTRIBUTED LOAD THAT DEVELOPS A MAXIMUM MOMENT IN THE STUD EQUAL TO 1.21 TIMES ITS NOMINAL FLEXURAL CAPACITY.
9. LIGHTNING PROTECTION POLE FOUNDATION DESIGN REACTIONS
   A. THE FOLLOWING NOMINAL (ASD) REACTIONS WERE USED FOR THE DESIGN OF THE LIGHTNING PROTECTION POLE FOUNDATIONS. THESE REACTIONS WERE ESTIMATED BASED ON LOADS CALCULATED IN ACCORDANCE WITH ASCE 7-10 USING THE WIND AND ICE LOAD CRITERIA LISTED IN NOTE 6. SUBMIT REACTIONS FROM POLE MANUFACTURERS FOR VERIFICATION PRIOR TO PLACING FOUNDATION CONCRETE.
      1. 76 FOOT LIGHTNING PROTECTION POLE:
         a. AXIAL = 3,320 LBS
         b. SHEAR = 3,290 LBS
         c. MOMENT = 226,000 FT-LBS
      2. 40 FOOT LIGHTNING PROTECTION POLE:
         a. AXIAL = 1,700 LBS
         b. SHEAR = 1,330 LBS
         c. MOMENT = 46,500 FT-LBS

4/22/2016 1:59:17 PM
COPYRIGHT © 2016 BURNS & McDONNELL ENGINEERING COMPANY, INC.

US ARMY CORPS OF ENGINEERS
OMAHA DISTRICT

SYM.	DATE	DESCRIPTION	APPR.	SYM.	DATE	DESCRIPTION	APPR.

U.S. ARMY ENGINEER DISTRICT
CORPS OF ENGINEERS
OMAHA, NEBRASKA

BURNS & McDONNELL
8201 NORMAN CENTER DR. #300
BLOOMINGTON, MN 55437
952-656-6003

DESIGNED BY: ESD	DATE: APRIL 2016
DWN BY: CGM	CKD BY: BRB	SOLICITATION NO.: W912BF-16-B-0007
SUBMITTED BY: -	CONTRACT NO.: -
FILE NAME: M/A9S-002	FILE NUMBER: AF212-220
SIZE: 34X22	PLOT SCALE: AS INDICATED	PLOT DATE: 4/22/16

FY15 P-341 CONSTRUCT ADDITION B1134
MINOT AFB, NORTH DAKOTA
PN: QUVF143101

GENERAL NOTES - SHEET 2

SHEET IDENTIFICATION NUMBER
S-002

ABBREVIATIONS

#	POUNDS OR NUMBER
%	PERCENT
&	AND
@	AT
AA	ALUMINUM ASSOCIATION
AB	ANCHOR BOLT
ABT	ABOUT
ACI	AMERICAN CONCRETE INSTITUTE
ADH	ADHESIVE
AGGR	AGGREGATE
AHR	ANCHOR
AISI	AMERICAN IRON AND STEEL INSTITUTE
AL	ALUMINUM
ALTN	ALTERNATE
ANSI	AMERICAN NATIONAL STANDARDS INSTITUTE
APPROX	APPROXIMATE
ARCH	ARCHITECT
ASTM	AMERICAN SOCIETY FOR TESTING OF MATERIALS
AWS	AMERICAN WELDING SOCIETY
B/P	BASE OF PIER
BC	BOLT CIRCLE
BETW	BETWEEN
BLDG	BUILDING
BM	BEAM
BO	BOTTOM OF
BOS	BOTTOM OF STEEL
BOT	BOTTOM
BRG	BEARING
BRKT	BRACKET
C/C	CENTER TO CENTER
CAP	CAPACITY
CF	CUBIC FEET
CHKR	CHECKER
CIR	CIRCLE
CJ	CONSTRUCTION JOINT
CL	CENTER LINE
CLJ	CONTROL JOINT
CLR	CLEAR
CMU	CONCRETE MASONRY UNIT
CO	CONCRETE OPENING
COL	COLUMN
COMP	COMPRESSION
CONC	CONCRETE
CONN	CONNECTION
CONT	CONTINUOUS
CONTR	CONTRACT
COORD	COORDINATE
COR	CORNER
COTR	CONTRACTING OFFICER
CRSI	CONCRETE REINFORCING STEEL INSTITUTE
CTR	CENTER
CTRD	CENTERED
CY	CUBIC YARD
DBL	DOUBLE
DET	DETAIL
DIA	DIAMETER
DIAG	DIAGONAL
DIM	DIMENSION
DK	DECKING
DL	DEAD LOAD
DN	DOWN
DWG	DRAWING
DWL	DOWEL
E	EAST
EA	EACH
ED	EQUIPMENT DRAIN
EF	EACH FACE
EJ	EXPANSION JOINT
EL	ELEVATION
ELEC	ELECTRICAL
ELEV	ELEVATOR
EMBED	EMBEDMENT
EQ	EQUAL
EQ SP	EQUALLY SPACED
EQUIP	EQUIPMENT
EQUIV	EQUIVALENT
EW	EACH WAY
EXIST	EXISTING
EXP	EXPANSION
EXT	EXTERIOR
FAB	FABRICATE
FD	FLOOR DRAIN
FDN	FOUNDATION
FF	FAR FACE
FL	FLOOR
FLG	FLANGE
FNSH	FINISH
FS	FAR SIDE
FT	FEET
FUT	FUTURE
GA	GAGE
GALV	GALVANIZE
GB	GRADE BEAM
GHSE	GREENHOUSE
GND	GROUND
GR	GRADE
GRTG	GRATING
H	SLAB THICKNESS
HDHSE	HEADHOUSE
HEF	HORIZONTAL EACH FACE
HEX	HEXAGON
HG	HIGH
HH	HEADHOUSE
HK	HOOK
HORIZ	HORIZONTAL
HPT	HIGH POINT
HR	HAND RAIL
HS	HIGH STRENGTH
IBC	INTERNATIONAL BUILDING CODE
ID	INSIDE DIAMETER
IF	INSIDE FACE
IJ	ISOLATION JOINT
IN	INCHES
INTR	INTERIOR
INVT	INVERT
IR	INSIDE RADIUS
JT	JOINT
KB	KNEE BRACE
KPL	KICK PLATE
KSI	KIPS PER SQUARE INCH
L	ANGLE
LAD	LADDER
LB	POUND
LD	DEVELOPMENT LENGTH
LG	LONG
LL	LIVE LOAD
LLH	LONG LEG HORIZONTAL
LLO	LONG LEG OUTSTANDING
LLV	LONG LEG VERTICAL
LNTL	LINTEL
LONG	LONGITUDINAL
LPT	LOW POINT
LS	LAP SPLICE
LVL	LEVEL
MATL	MATERIAL
MAX	MAXIMUM
MC	MOMENT CONNECTION
MECH	MECHANICAL
MEZZ	MEZZANINE
MFR	MANUFACTURER
MH	MANHOLE
MIN	MINIMUM
MISC	MISCELLANEOUS
MK	MARK
MO	MASONRY OPENING
N	NORTH
NA	NOT APPLICABLE
NE	NORTHEAST
NF	NEAR FACE
NIC	NOT IN CONTRACT
NO	NUMBER
NOM	NOMINAL
NS	NEAR SIDE
NTS	NOT TO SCALE
NW	NORTHWEST
OC	ON CENTER
OD	OUTSIDE DIAMETER
OF	OUTSIDE FACE
OPNG	OPENING
OPP	OPPOSITE
OSHA	OCCUPATIONAL SAFETY AND HEALTH ADMINISTRATION
OZ	OUNCE
PCF	POUNDS PER CUBIC FOOT
PED	PEDESTAL
PEMP	PRE-ENGINEERED METAL BUILDING
PEN	PENETRATE
PERIM	PERIMETER
PERP	PERPENDICULAR
PJNT	PROJECTION
PL	PLATE
PLC	PLACES
PREFAB	PREFABRICATED
PS	PIPE SUPPORT
PSF	POUNDS PER SQUARE FOOT
PSI	POUNDS PER SQUARE INCH
PVC	POLYVINYL CHLORIDE
R	RISER
RAD	RADIUS
RD	ROOF DRAIN
REF	REFERENCE
REINF	REINFORCE
REQD	REQUIRED
REV	REVISION
RM	ROOM
S	SOUTH
SB	SHEAR BAR
SCHED	SCHEDULE
SE	SOUTHEAST
SECT	SECTION
SF	SWAY FRAME
SH	SHEET
SIM	SIMILAR
SLO	SHORT LEG OUTSTANDING
SLP	SLOPE
SLV	SLEEVE
SP	SPACE
SPEC	SPECIFICATION
SQ	SQUARE
SST	STAINLESS STEEL
STD	STANDARD
STIF	STIFFENER
STIR	STIRRUP
STL	STEEL
STR	STRAIGHT
STRL	STRUCTURAL
STRUC	STRUCTURAL
SW	SOUTHWEST
SYMM	SYMMETRICAL
T	TON
T&B	TOP AND BOTTOM
T/	TOP OF
T/C OR TOC	TOP OF CONCRETE
T/P	TOP OF PIER
T/STL OR TOS	TOP OF STEEL
TEMP	TEMPORARY
THD	THREAD
THK	THICK
THRU	THROUGH
TOB	TOP OF BOLT
TOG	TOP OF GRATING
TOS OR T/S	TOP OF STEEL
TRD	TREAD
TYP	TYPICAL
UNO	UNLESS NOTED OTHERWISE
VAR	VARIES
VEF	VERTICAL EACH FACE
VERT	VERTICAL
W	WEST
W/	WITH
W/O	WITHOUT
WD	WIDE
WDT	WIDTH
WP	WORK POINT
WS	WATERSTOP
WT	WEIGHT
WWF	WELDED WIRE FABRIC

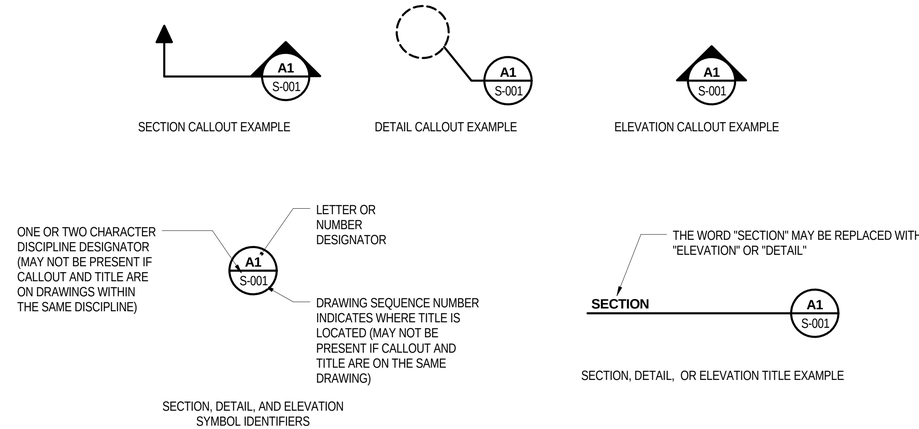

SECTION, DETAIL, AND ELEVATION IDENTIFICATION SYSTEM

US ARMY CORPS OF ENGINEERS
OMAHA DISTRICT

SYM.	DATE	DESCRIPTION	APPR.	SYM.	DATE	DESCRIPTION	APPR.

U.S. ARMY ENGINEER DISTRICT
CORPS OF ENGINEERS
OMAHA, NEBRASKA

BURNS & McDONNELL
8201 NORMAN CENTER DR. #300
BLOOMINGTON, MN 55437
952-656-6003

DESIGNED BY: ESS	CKD BY: RBB	DATE: APRIL 2016
DWN BY: CGM	CKD BY: RBB	SOLICITATION NO.: W912BF-16-B-0007
SUBMITTED BY: -		CONTRACT NO.: -
FILE NAME: MIA8S-003		FILE NUMBER: AF212-220
SIZE: 34X22	PLOT SCALE: AS INDICATED	PLOT DATE: 4/22/16

FY15 P-341 CONSTRUCT ADDITION B1134
MINOT AFB, NORTH DAKOTA
PN: QJVF143101

LEGEND & ABBREVIATIONS

SHEET IDENTIFICATION NUMBER
S-003

4/22/2016 1:59:18 PM
COPYRIGHT © 2016 BURNS & McDONNELL ENGINEERING COMPANY, INC.

NOTES:

1. STATEMENT OF SPECIAL INSPECTIONS
   A. THIS "STATEMENT OF SPECIAL INSPECTIONS" HAS BEEN PREPARED IN ACCORDANCE WITH IBC 2012, SECTION 1704.
   B. CONTRACTOR SHALL RETAIN PRE-COORDINATED AND GOVERNMENT-APPROVED THIRD-PARTY QUALITY ASSURANCE AGENCIES TO PROVIDE SPECIAL INSPECTIONS DURING CONSTRUCTION IN ACCORDANCE WITH IBC 2012, CHAPTER 17.
   C. EACH SPECIAL INSPECTOR SHALL BE A QUALIFIED PERSON WHO SHALL DEMONSTRATE COMPETENCE, TO THE SATISFACTION OF THE CONTRACTING OFFICER'S REPRESENTATIVE, FOR INSPECTION OF THE PARTICULAR TYPE OF CONSTRUCTION OR OPERATION REQUIRING SPECIAL INSPECTION.
   D. SPECIAL INSPECTION AGENCY SHALL SUBMIT INSPECTION REPORTS DURING CONSTRUCTION FOR VERIFICATION, INCLUDING FINAL REPORTS IN ACCORDANCE WITH IBC 2012, SECTION 1704.1.2.
   E. SPECIAL INSPECTOR SHALL USE THE LATEST ISSUE OF THE STRUCTURAL DRAWINGS FOR ALL INSPECTIONS. SHOP FABRICATION DRAWINGS SHALL NOT BE USED FOR SUCH PURPOSES.
   F. THE FOLLOWING TABLES IDENTIFY THE MATERIALS, SYSTEMS, AND COMPONENTS FOR WHICH SPECIAL INSPECTION IS REQUIRED.
2. TESTING REQUIREMENTS
   A. CONTRACTOR SHALL RETAIN PRE-COORDINATED AND GOVERNMENT-APPROVED THIRD-PARTY TESTING AGENCIES TO PROVIDE STRUCTURAL TESTING DURING CONSTRUCTION IN ACCORDANCE WITH IBC 2012, CHAPTER 17.
   B. TESTING AGENCY SHALL SUBMIT TEST RESULTS DURING CONSTRUCTION FOR VERIFICATION INCLUDING A FINAL REPORT IN ACCORDANCE WITH IBC 2012, 1704.2.4.
   C. THE TABLES BELOW IDENTIFY THE STRUCTURAL TESTS REQUIRED FOR THIS PROJECT.
3. STRUCTURAL OBSERVATIONS
   A. CONTRACTOR SHALL RETAIN PRE-COORDINATED AND GOVERNMENT-APPROVED THIRD-PARTY REGISTERED DESIGN PROFESSIONALS TO PROVIDE STRUCTURAL OBSERVATIONS DURING CONSTRUCTION IN ACCORDANCE WITH IBC 2012, CHAPTER 17.
   B. EACH STRUCTURAL OBSERVER SHALL SUBMIT WRITTEN STATEMENTS IDENTIFYING FREQUENCY AND EXTENT OF STRUCTURAL OBSERVATIONS AND ANY REPORTED

IBC 2012 TABLE 1705.3 REQUIRED VERIFICATION AND INSPECTION OF CONCRETE CONSTRUCTION

VERIFICATION AND INSPECTION	CONTINUOUS	PERIODIC	REFERENCED STANDARD[a]	IBC REFERENCE
1. INSPECTION OF REINFORCING STEEL.	—	X	ACI 318: 3.5, 7.1-7.7	1910.4
2. INSPECTION OF REINFORCING STEEL WELDING IN ACCORDANCE WITH TABLE 1705.2.2, ITEM 2b.	—	—	AWS D1.4 ACI 318: 3.5.2	—
3. INSPECTION OF ANCHORS CAST IN CONCRETE WHERE ALLOWABLE LOADS HAVE BEEN INCREASED OR WHERE STRENGTH DESIGN IS USED.	—	X	ACI 318: 8.1.3, 21.2.8	1908.5, 1909.1
4. INSPECTION OF ANCHORS POST-INSTALLED IN HARDENED CONCRETE MEMBERS.	—	X	ACI 318: 3.8.6, 8.1.3, 21.2.8	1909.1
5. VERIFYING USE OF REQUIRED DESIGN MIX.	—	X	ACI 318: CH. 4, 5.2-5.4	1904.2, 1910.2, 1910.3
6. AT THE TIME FRESH CONCRETE IS SAMPLED TO FABRICATE SPECIMENS FOR STRENGTH TESTS, PERFORM SLUMP AND AIR CONTENT TESTS, AND DETERMINE THE TEMPERATURE OF THE CONCRETE.	X	—	ASTM C 172 ASTM C 31 ACI 318: 5.6, 5.8	1910.10
7. INSPECTION OF CONCRETE PLACEMENT FOR PROPER APPLICATION TECHNIQUES.	X	—	ACI 318: 5.9, 5.10	1910.6, 1910.7, 1910.8
8. INSPECTION FOR MAINTENANCE OF SPECIFIED CURING TEMPERATURE AND TECHNIQUES.	—	X	ACI 318: 5.11- 5.13	1910.9
9. INSPECTION OF PRECAST CONCRETE :				
a. APPLICATION OF PRESTRESSING FORCES.	—	—	ACI 318: 18.20	—
10. ERECTION OF PRECAST CONCRETE MEMBERS.	—	—	ACI 318: CH. 16	—
11. VERIFICATION OF IN-SITU CONCRETE STRENGTH, PRIOR TO STRESSING OF TENDONS IN POST-TENSIONED CONCRETE AND PRIOR TO REMOVAL OF SHORES AND FORMS FROM BEAMS AND STRUCTURAL SLABS.	—	—	ACI 318: 6.2	
12. INSPECT FORMWORK FOR SHAPE, LOCATION AND DIMENSIONS OF THE CONCRETE MEMBER BEING FORMED.	—	—	ACI 318: 6.1.1	

FOR SI: 1 INCH = 25.4 MM

a. WHERE APPLICABLE, SEE ALSO SECTION 1705.11, SPECIAL INSPECTIONS FOR SEISMIC RESISTANCE.
b. SPECIFIC REQUIREMENTS FOR SPECIAL INSPECTION SHALL BE INCLUDED IN THE RESEARCH REPORT FOR THE ANCHOR ISSUED BY AN APPROVED SOURCE IN ACCORDANCE WITH ACI 355.2 OR OTHER QUALIFICATION PROCEDURES. WHERE SPECIFIC REQUIREMENTS ARE NOT PROVIDED, SPECIAL INSPECTION REQUIREMENTS SHALL BE SPECIFIED BY THE REGISTERED DESIGN PROFESSIONAL AND SHALL BE APPROVED BY THE BUILDING OFFICIAL PRIOR TO THE COMMENCEMENT OF THE WORK.
c. WHEN DIRECTED BY THE CONTRACT DOCUMENTS TO PROVIDE POST-INSTALLED ANCHORAGES THE FOLLOWING GUIDELINES SHALL BE FOLLOWED:
   1. A REPRESENTATIVE OF THE ANCHOR MANUFACTURER OR PROJECT SPECIAL INSPECTOR SHALL BE ON SITE TO OVERSEE THE INSTALLATION OF THE FIRST FOUR ANCHORS FOR EACH TYPE OF ANCHOR INSTALLED. THIS MEASURE SHALL BE TAKEN FOR EACH INSTALLER OF THE ANCHORS. THIS SERVICE IS TYPICALLY PROVIDED FREE BY THE LOCAL ANCHOR REPRESENTATIVE.
   2. THE FIRST FOUR ANCHORS SHALL BE TENSION TESTED ONCE INSTALLATION IS COMPLETE FOR 200% OF THE SERVICE LEVEL LOAD CAPACITY AS SPECIFIED BY THE MANUFACTURER.

IBC 2012 TABLE 1705.6 REQUIRED VERIFICATION AND INSPECTION OF SOILS

VERIFICATION AND INSPECTION TASK	CONTINUOUS DURING TASK LISTED	PERIODICALLY DURING TASK LISTED
1. VERIFY MATERIALS BELOW SHALLOW FOUNDATIONS ARE ADEQUATE TO ACHIEVE THE DESIGN BEARING CAPACITY.	—	X
2. VERIFY EXCAVATIONS ARE EXTENDED TO PROPER DEPTH AND HAVE REACHED PROPER MATERIAL.	—	X
3. PERFORM CLASSIFICATION AND TESTING OF COMPACTED FILL MATERIALS.	—	X
4. VERIFY USE OF PROPER MATERIALS, DENSITIES AND LIFT THICKNESSES DURING PLACEMENT AND COMPACTION OF COMPACTED FILL.	X	—
5. PRIOR TO PLACEMENT OF COMPACTED FILL, OBSERVE SUBGRADE AND VERIFY THAT SITE HAS BEEN PREPARED PROPERLY.	—	X

IBC 2012 TABLE 1705.2.2 REQUIRED VERIFICATION AND INSPECTION OF STEEL CONSTRUCTION OTHER THAN STRUCTURAL STEEL

VERIFICATION AND INSPECTION	CONTINUOUS	PERIODIC	REFERENCED STANDARD[a]
1. MATERIAL VERIFICATION OF COLD-FORMED STEEL DECK:			
a. IDENTIFICATION MARKINGS TO CONFORM TO ASTM STANDARDS SPECIFIED IN THE APPROVED CONSTRUCTION DOCUMENTS.	—	X	APPLICABLE ASTM MATERIAL STANDARDS
b. MANUFACTURER'S CERTIFIED TEST REPORTS.	—	X	
2. INSPECTION OF WELDING:			
a. COLD-FORMED STEEL DECK:			
1) FLOOR AND ROOF DECK WELDS.	—	X	AWS D1.3
b. REINFORCING STEEL:			
1) VERIFICATION OF WELDABILITY OF REINFORCING STEEL OTHER THAN ASTM A 706.	—	—	AWS D1.4 ACI 318: SECTION 3.5.2
2) REINFORCING STEEL RESISTING FLEXURAL AND AXIAL FORCES IN INTERMEDIATE AND SPECIAL MOMENT FRAMES, AND BOUNDARY ELEMENTS OF SPECIAL STRUCTURAL WALLS OF CONCRETE AND SHEAR REINFORCEMENT.	—	—	
3) SHEAR REINFORCEMENT	—	X	
4) OTHER REINFORCING STEEL.	—	X	

NOTES:

1. "—" = NOT APPLICABLE
2. O = OBSERVE THESE ITEMS ON A RANDOM BASIS. OPERATIONS NEED NOT TO BE DELAYED PENDING THESE INSPECTIONS.
3. P = PERFORM THESE TASKS FOR EACH JOINT OR MEMBER.
4. QA = INSPECTION THAT THE WORK IS IN COMPLIANCE WITH THE CONSTRUCTION DOCUMENTS
5. QC = INSPECTION THAT THE WORK IS PERFORMED IN ACCORDANCE WITH THE CONSTRUCTION DOCUMENTS
6. ALL COSTS DUE TO SPECIAL INSPECTIONS IN ACCORDANCE WITH IBC 2012, ACI 530-11 AND AISC 300-10 SHALL BE THE RESPONSIBILITY OF THE CONTRACTOR. THIS INCLUDES ALL QC AND QA REQUIREMENTS INDICATED ON S-003H AND S-004H.
7. QUALITY CONTROL: CONTROLS AND INSPECTIONS IMPLEMENTED BY THE FABRICATOR OR ERECTOR, AS APPLICABLE, TO ENSURE THAT THE MATERIAL PROVIDED AND WORK PERFORMED MEET THE REQUIREMENTS OF THE APPROVED CONSTRUCTION DOCUMENTS AND REFERENCED STANDARDS.
8. QUALITY ASSURANCE: MONITORING AND INSPECTION TASKS PERFORMED BY AN EGENCY OR FIRM OTHER THAN THE FABRICATOR OR ERECTOR TO ENSURE THAT THE MATERIAL PROVIDED AND WORK PERFORMED BY THE FABRICATION AND ERECTOR MEET THE REQUIREMENTS OF THE APPROVED CONSTRUCTION DOCUMENTS AND REFERENCED STANDARDS. QUALITY ASSURANCE INCLUDES THOSE TASKS DESIGNATED "SPECIAL INSPECTION" BY THE APPLICABLE BUILDING CODE.

US ARMY CORPS OF ENGINEERS
OMAHA DISTRICT

SYM.	DATE	DESCRIPTION	SYM.	DATE	DESCRIPTION	APPR.

U.S. ARMY ENGINEER DISTRICT
CORPS OF ENGINEERS
OMAHA, NEBRASKA

BURNS & McDONNELL
8201 NORMAN CENTER DR. #300
BLOOMINGTON, MN 55437
952-656-6003

DESIGNED BY: ESB	DATE: APRIL 2016
DWN BY: CGM / CKD BY: BBB	SOLICITATION NO.: W912BF-16-B-0007
SUBMITTED BY: -	CONTRACT NO.: -
FILE NAME: MI0BS-004	FILE NUMBER: AF212-220
SIZE: 34X22 / PLOT SCALE: AS INDICATED	PLOT DATE: 4/22/16

FY15 P-341 CONSTRUCT ADDITION B1134
MINOT AFB, NORTH DAKOTA
PN: QJVF143101

STATEMENT OF SPECIAL INSPECTIONS

SHEET IDENTIFICATION NUMBER
S-004

4/22/2016 1:59:19 PM
COPYRIGHT © 2016 BURNS & McDONNELL ENGINEERING COMPANY, INC.

AISC 360-10 TABLE N5.4-1
INSPECTION TASKS PRIOR TO WELDING

INSPECTION TASKS PRIOR TO WELDING	QC	QA
WELDING PROCEDURE SPECIFICATION (WPSs) AVAILABLE	P	P
MANUFACTURER CERTIFICATIONS FOR WELDING CONSUMABLES AVAILABLE	P	P
MATERIAL IDENTIFICATION (TYPE/GRADE)	O	O
WELDER IDENTIFICATION SYSTEM (1)	O	O
FIT-UP OF GROOVE WELDS (INCLUDING JOINT GEOMETRY) • JOINT PREPARATION • DIMENSIONS (ALIGNMENT, ROOT OPENING, ROOT FACE, BEVEL) • CLEANLINESS (CONDITION OF STEEL SURFACES) • TACKING (TACK WELD QUALITY AND LOCATION) • BACKING TYPE AND FIT (IF APPLICABLE)	O	O
CONFIGURATION AND FINISH OF ACCESS HOLES	O	O
FIT-UP OF FILLET WELDS • DIMENSIONS (ALIGNMENT, GAPS AT ROOT) • CLEANLINESS (CONDITION OF STEEL SURFACES) • TACKING (TACK WELD QUALITY AND LOCATION)	O	O
CHECK WELDING EQUIPMENT	O	—

(1) THE FABRICATOR OR ERECTOR, AS APPLICABLE, SHALL MAINTAIN A SYSTEM BY WHICH A WELDER WHO HAS WELDED A JOINT OR MEMBER CAN BE IDENTIFIED. STAMPS, IF USED, SHALL BE THE LOW-STRESS TYP.

AISC 360-10 TABLE N5.4-2
INSPECTION TASKS DURING WELDING

INSPECTION TASKS DURING WELDING	QC	QA
USE OF QUALIFIED WELDERS	O	O
CONTROL AND HANDLING OF WELDING CONSUMABLES • PACKAGING • EXPOSURE CONTROL	O	O
NO WELDING OVER CRACKED TACK WELDS	O	O
ENVIRONMENTAL CONDITIONS • WIND SPEED WITHIN LIMITS • PRECIPITATION AND TEMPERATURE	O	O
WPS FOLLOWED • SETTINGS ON WELDING EQUIPMENT • TRAVEL SPEED • SELECTED WELDING MATERIALS • SHIELDING GAS TYPE/FLOW RATE • PREHEAT APPLIED • INTERPASS TEMPERATURE MAINTAINED (MIN./MAX.) • PROPER POSITION (F, V, H, OH)	O	O
WELDING TECHNIQUES • INTERPASS AND FINAL CLEANING • EACH PASS WITHIN PROFILE LIMITATIONS • EACH PASS MEETS QUALITY REQUIREMENTS	O	O

AISC 360-10 TABLE N5.4-3
INSPECTION TASKS AFTER WELDING

INSPECTION TASKS AFTER WELDING	QC	QA
WELDS CLEANED	O	O
SIZE, LENGTH AND LOCATION OF WELDS	P	P
WELDS MEET VISUAL ACCEPTANCE CRITERIA • CRACK PROHIBITION • WELD/BASE-METAL FUSION • CRATER CROSS SECTION • WELD PROFILES • WELD SIZE • UNDERCUT • POROSITY	P	P
ARC STRIKES	P	P
K-AREA (1)	P	P
BACKING REMOVED AND WELD TABS REMOVED (IF REQUIRED)	P	P
REPAIR ACTIVITIES	P	P
DOCUMENT ACCEPTANCE OR REJECTION OF WELDED JOINT OR MEMBER	P	P

(1) WHEN WELDING OF DOUBLER PLATES, CONTINUITY PLATES OR STIFFENERS HAS BEEN PERFORMED IN THE K-AREA, VISUALLY INSPECT THE WEB K-AREA FOR CRACKS WITHIN 3 IN. (75 MM) OF THE WELD.

AISC 360-10 TABLE N5.6-1
INSPECTION TASKS PRIOR TO BOLTING

INSPECTION TASKS PRIOR TO BOLTING	QC	QA
MANUFACTURER'S CERTIFICATIONS AVAILABLE FOR FASTENER MATERIALS	O	P
FASTENERS MARKED IN ACCORDANCE WITH ASTM REQUIREMENTS	O	O
PROPER FASTENERS SELECTED FOR THE JOINT DETAIL (GRADE, TYPE, BOLT LENGTH IF THREADS ARE TO BE EXCLUDED FROM SHEAR PLANE)	O	O
PROPER BOLTING PROCEDURE SELECTED FOR JOINT DETAIL	O	O
CONNECTING ELEMENTS, INCLUDING THE APPROPRIATE FAYING SURFACE CONDITION AND HOLE PREPARATION, IF SPECIFIED, MEET APPLICABLE REQUIREMENTS	O	O
PRE-INSTALLATION VERIFICATION TESTING BY INSTALLATION PERSONNEL OBSERVED AND DOCUMENTED FOR FASTENER ASSEMBLIES AND METHODS USED	P	O
PROPER STORAGE PROVIDED FOR BOLTS, NUTS, WASHERS AND OTHER FASTENER COMPONENTS	O	O

AISC 360-10 TABLE N5.6-2
INSPECTION TASKS DURING BOLTING

INSPECTION TASKS DURING BOLTING	QC	QA
FASTENER ASSEMBLIES, OF SUITABLE CONDITION, PLACED IN ALL HOLES AND WASHERS (IF REQUIRED) ARE POSITIONED AS REQUIRED	O	O
JOINT BROUGHT TO THE SNUG-TIGHT CONDITION PRIOR TO THE PRETENSIONG OPERATION	O	O
FASTENER COMPONENT NOT TURNED BY THE WRENCH PREVENTED FROM ROTATING	O	O
FASTENERS ARE PRETENSIONED IN ACCORDANCE WITH THE RCSC SPECIFICATION, PROGRESSING SYSTEMATICALLY FROM THE MOST RIGID POINT TOWARD THE FREE EDGES	—	—

AISC 360-10 TABLE N5.6-3
INSPECTION TASKS AFTER BOLTING

INSPECTION TASKS AFTER BOLTING	QC	QA
DOCUMENT ACCEPTANCE OR REJECTION OF BOLTED CONNECTIONS	P	P

AISC 360-10
FABRICATOR AND ERECTOR QUALITY CONTROL PROGRAM

FABRICATOR INSPECTION TASKS	QC	QA
DETAILS IN ACCORDANCE WITH SECTION N5	P	-
SHOP CUT AND FINISHED SURFACES IN ACCORDANCE WITH SECTION M2	P	-
SHOP HEATING FOR STRAIGHTENING, CAMBERING AND CURVING IN ACCORDANCE WITH SECTION M2.1	—	-
TOLERANCES FOR SHOP FABRICATION IN ACCORDANCE WITH SECTION 6 OF THE *CODE OF STANDARD PRACTICE*	P	-
INSPECT THE FABRICATED STEEL TO VERIFY COMPLIANCE WITH DETAILS SHOWN ON SHOP DRAWINGS, SUCH AS PROPER APPLICATION OF JOINT DETAILS AT EACH CONNECTION	P	-
ERECTOR INSPECTION TASKS	**QC**	**QA**
DETAILS IN ACCORDANCE WITH SECTION N5	P	-
STEEL DECK HEADED STEEL STUD ANCHOR PLACEMENT AND ATTACHMENT IN ACCORDANCE WITH SECTION N6	—	-
FIELD CUT SURFACES IN ACCORDANCE WITH SECTION M2.2	P	-
FIELD HEATING FOR STRAIGHTENING IN ACCORDANCE WITH SECTION M2.1	P	-
TOLERANCES FOR FIELD ERECTION IN ACCORDANCE WITH SECTION 7.13 OF THE *CODE OF STANDARD PRACTICE*	P	-
INSPECT THE ERECTED STEEL FRAME TO VERIFY COMPLIANCE WITH THE DETAILS SHOWN ON THE ERECTION DRAWINGS, SUCH AS BRACES, STIFFENERS, MEMBER LOCATIONS AND PROPER APPLICATION OF JOINT DETAILS AT EACH CONNECTION	P	-
INSPECT PLACEMENT OF ANCHOR RODS AND OTHER EMBEDMENTS SUPPORTING STRUCTURAL STEEL FOR COMPLIANCE WITH CONSTRUCTION DOCUMENTS. AS A MINIMUM, THE DIAMETER, GRADE, TYPE AND LENGTH OF THE ANCHOR ROD OR EMBEDDED ITEM, AND THE EXTENT OR DEPTH OF EMBEDMENT INTO CONCRETE, SHALL BE VERIFIED PRIOR TO PLACEMENT OF CONCRETE	-	P
INSPECT THE FABRICATED STEEL OR ERECTED STEEL FRAME, AS APPROPRIATE, TO VERIFY COMPLIANCE WITH THE DETAILS SHOWN ON CONSTRUCTION DOCUMENTS, SUCH AS BRACES, STIFFENERS, MEMBER LOCATIONS AND PROPER APPLICATION OF JOINT DETAILS AT EACH CONNECTION	-	O
REVIEW THE MATERIAL TEST REPORTS AND CERTIFICATIONS FOR COMPLIANCE WITH THE CONSTRUCTION DOCUMENTS	-	P

US ARMY CORPS OF ENGINEERS
OMAHA DISTRICT

SYM.	DATE	DESCRIPTION	SYM.	DATE	DESCRIPTION	APPR.

U.S. ARMY ENGINEER DISTRICT
CORPS OF ENGINEERS
OMAHA, NEBRASKA

DESIGNED BY: ESB
DWN BY: CGM
CKD BY: BBB
SUBMITTED BY: -
DATE: APRIL 2016
SOLICITATION NO.: W912BF-16-B-0007
CONTRACT NO.: -
FILE NAME: MI48S-005
FILE NUMBER: AF212-220
SIZE: 34X22
PLOT SCALE: AS INDICATED
PLOT DATE: 4/22/16

BURNS & McDONNELL
8201 NORMAN CENTER DR. #300
BLOOMINGTON, MN 55437
952-656-6003

FY15 P-341 CONSTRUCT ADDITION B1134
MINOT AFB, NORTH DAKOTA
PN: QJVF143101

STATEMENT OF SPECIAL INSPECTIONS

SHEET IDENTIFICATION NUMBER
S-005

4/22/2016 1:59:19 PM
COPYRIGHT © 2016 BURNS & McDONNELL ENGINEERING COMPANY, INC.

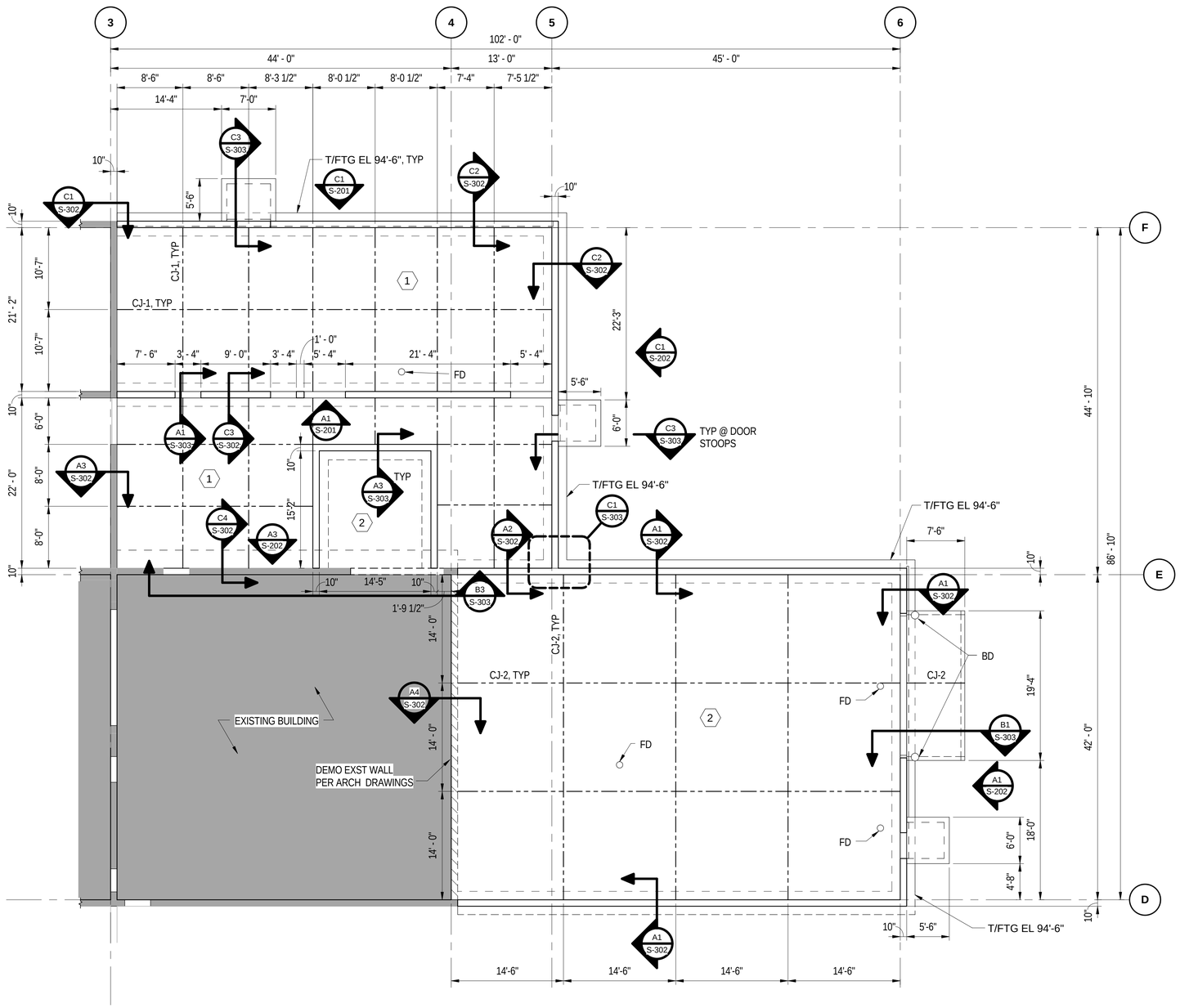

A1 SLAB AND FOUNDATION PLAN - AREA A

SCALE: 1/8" = 1'-0"

PLAN NORTH

0 4' 8' 16'

KEYED NOTES	
NO.	DESCRIPTION
1	5" SLAB-ON-GRADE FINISH FLOOR EL = 100'-0". REINFORCE WITH #4@12" O.C. EW CTRD IN SLAB
2	8" SLAB-ON-GRADE FINISH FLOOR EL = 100'-0". REINFORCE WITH #4@12" O.C. EW CTRD IN SLAB
3	1 1/2", 20 GAGE WIDE RIB STEEL DECK

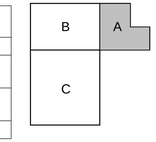

KEYPLAN

NOTES:

1. FOR GENERAL NOTES AND ABBREVIATIONS, SEE DWGS S-001, S-002, S-003.
2. FOR TYPICAL CONCRETE DETAILS, SEE DWG S-301.
3. COORDINATE OPENING LOCATIONS AND SIZES WITH ARCHITECTURAL DRAWINGS.
4. FD INDICATES FLOOR DRAIN. FOR TYPICAL FLOOR DRAIN DETAIL, SEE DWG S-301. SEE PLUMBING DRAWINGS FOR LOCATION.
5. BD INDICATES BOLLARD. SEE DWG C-502 FOR DETAIL.
6. PROVIDE 4" HIGH EQUIPMENT PAD, AS REQUIRED.
7. PERFORM EARTHWORK TO PROTECT EXISTING STRUCTURES TO REMAIN, INCLUDING FOUNDATIONS, AGAINST DAMAGE FROM OPERATIONS, UNDERMINING, OR OTHER CAUSES.

US ARMY CORPS OF ENGINEERS
OMAHA DISTRICT

SYM.	DATE	DESCRIPTION	SYM.	DATE	DESCRIPTION	APPR.

DESIGNED BY: ESWB
DWN BY: CGM
CKD BY: BRB
SUBMITTED BY: -
DATE: APRIL 2016
SOLICITATION NO.: W912BF-16-B-0007
CONTRACT NO.: -
FILE NUMBER: AF212-220
FILE NAME: MIA8S-101
PLOT SCALE: AS INDICATED
PLOT DATE: 4/22/16
SIZE: 34X22

U.S. ARMY ENGINEER DISTRICT
CORPS OF ENGINEERS
OMAHA, NEBRASKA

BURNS & McDONNELL
8201 NORMAN CENTER DR. #300
BLOOMINGTON, MN 55437
952-656-6003

FY15 P-341 CONSTRUCT ADDITION B1134
MINOT AFB, NORTH DAKOTA
PN: QJVF143101

SLAB AND FOUNDATION PLAN

SHEET IDENTIFICATION NUMBER
S-101

4/22/2016 1:59:20 PM
COPYRIGHT © 2016 BURNS & McDONNELL ENGINEERING COMPANY, INC.

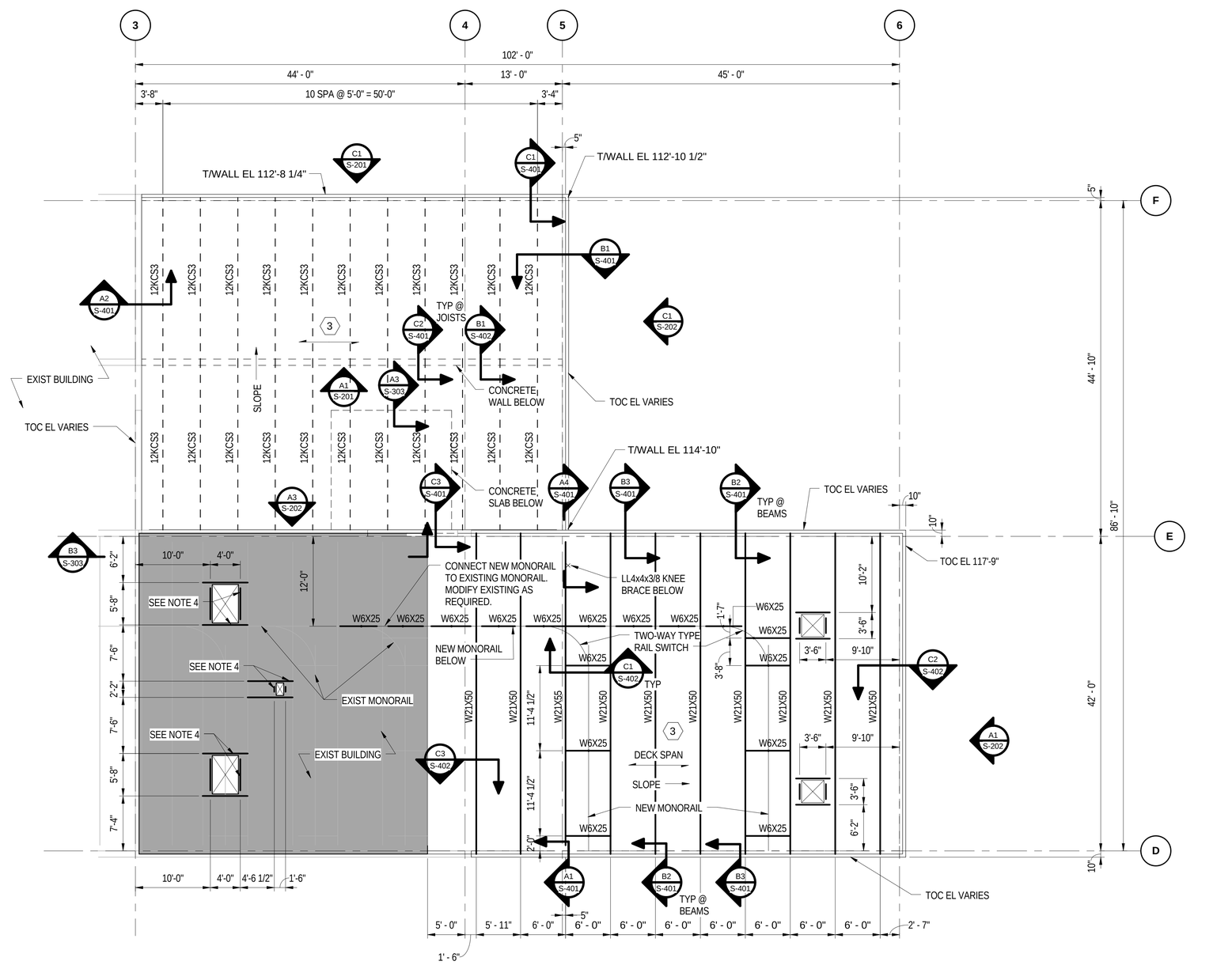

A1 ROOF FRAMING PLAN - AREA A

SCALE: 1/8" = 1'-0"

KEYED NOTES	
NO.	DESCRIPTION
1	5" SLAB-ON-GRADE FINISH FLOOR EL = 100'-0". REINFORCE WITH #4@12" O.C. EW CTRD IN SLAB
2	8" SLAB-ON-GRADE FINISH FLOOR EL = 100'-0". REINFORCE WITH #4@12" O.C. EW CTRD IN SLAB
3	1 1/2", 20 GAGE WIDE RIB STEEL DECK

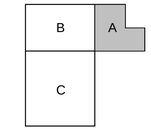

KEYPLAN

NOTES:
1. FOR GENERAL NOTES AND ABBREVIATIONS, SEE DWGS S-001, S-002, S-003.
2. FOR TYPICAL CONCRETE DETAILS, SEE DWG S-301.
3. COORDINATE OPENING LOCATIONS AND SIZES WITH ARCHITECTURAL DRAWINGS.
4. SEE DETAIL C4 ON S-401 FOR MEMBER SIZES AT ROOF OPENINGS. CONTRACTOR TO COORDINATE WITH ARCHITECTURAL AND MECHANICAL DRAWINGS FOR LOCATION OF ROOF PENETRATIONS.

MONORAIL NOTES:
1. REFERENCE SPECIFICATION 41 22 23.19.
2. EXISTING HOIST CAPACITY: 3 TONS.
3. CONTRACTOR SHALL CONSULT WITH PATENTED TRACK UNDERHUNG MONORAIL SUPPLIER (TC AMERICAN, CLEVELAND TRAMRAIL, OR APPROVED CRANE AND MONORAIL SUPPLIER) TO CONFIRM COMPATIBILITY WITH EXISTING MONORAIL SYSTEM. VERIFY RAIL SECTION, TRACK SWITCHES AND CURVES, AND HANGER AND CONNECTION RODS.
4. ALL MONORAIL SUPPORTS SHALL BE LOCATED MIDWAY ADJACENT BEAM UNLESS OTHERWISE SHOWN. PROVIDE ADDITIONAL ROOF SUPPORTS AND BRACING AT MONORAIL TRACK SWITCHES AND AT SWING-OUT TRACK SECTIONS.
5. MONORAIL SUPPORT POINTS ARE INDICATED: SEE SECTION C1/S-402. CONTRACTOR SHALL SUPPLY ANY ADDITIONAL SUPPORTS AS REQUIRED BY MONORAIL SUPPLIER.
6. CONTRACTOR SHALL PROVIDE AND LOCATE MONORAIL BRACING SYSTEM PER MONORAIL MANUFACTURER'S RECOMMENDATIONS.

US ARMY CORPS OF ENGINEERS
OMAHA DISTRICT

SYM.	DATE	DESCRIPTION	SYM.	DATE	DESCRIPTION	APPR.

DESIGNED BY: ESD
DWN BY: CGM
CKD BY: BBB
SUBMITTED BY: -
FILE NAME: MIA8S-102
SIZE: 34X22
PLOT SCALE: AS INDICATED
DATE: APRIL 2016
SOLICITATION NO.: W912BF-16-B-0007
CONTRACT NO.: -
FILE NUMBER: AF212-220
PLOT DATE: 4/22/16

U.S. ARMY ENGINEER DISTRICT
CORPS OF ENGINEERS
OMAHA, NEBRASKA

BURNS & McDONNELL
8201 NORMAN CENTER DR. #300
BLOOMINGTON, MN 55437
952-656-6003

FY15 P-341 CONSTRUCT ADDITION B1134
MINOT AFB, NORTH DAKOTA
PN: QVFF43101

ROOF FRAMING PLAN

SHEET IDENTIFICATION NUMBER
S-102

4/22/2016 1:59:21 PM
COPYRIGHT © 2016 BURNS & McDONNELL ENGINEERING COMPANY, INC.

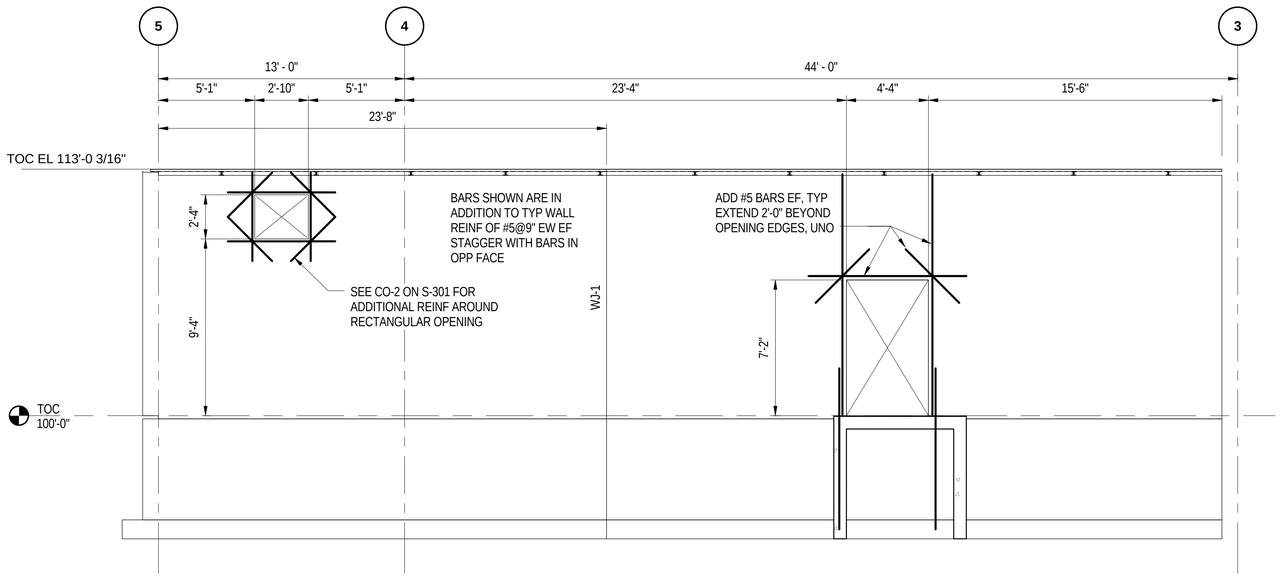

C1 ELEVATION - GRID F

SCALE: 1/4" = 1'-0"

0 2' 4' 8'

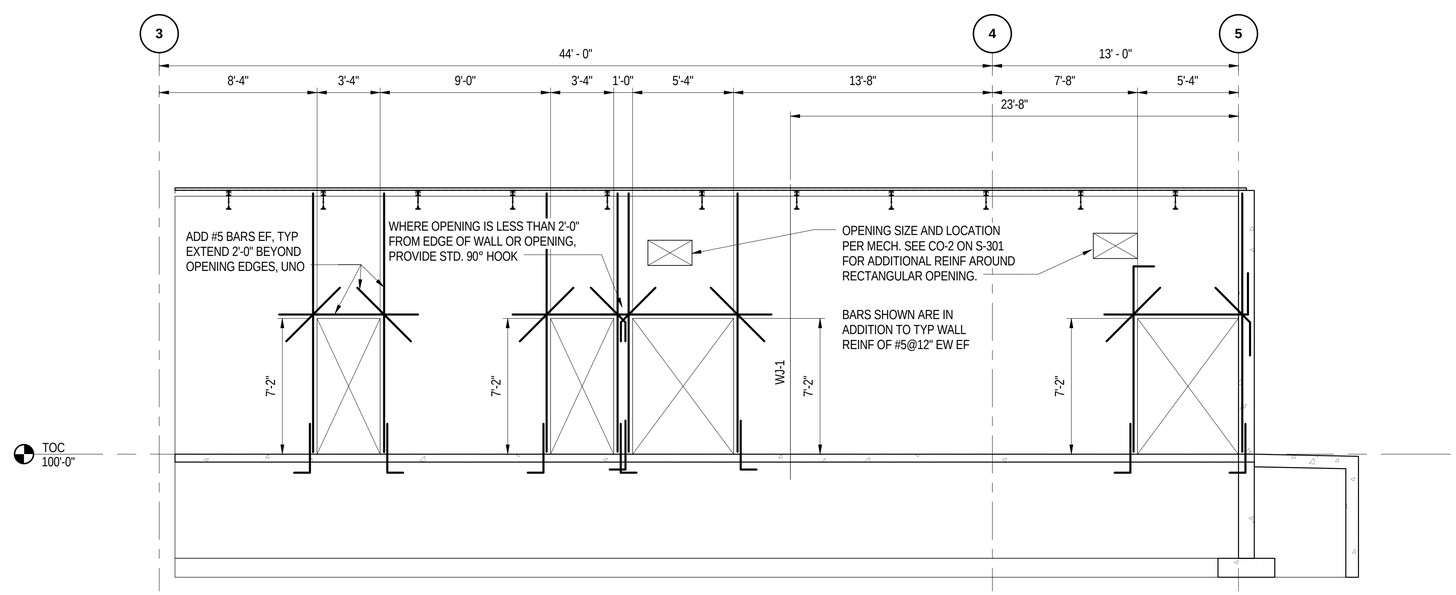

A1 ELEVATION - GRID BTWN E&F

SCALE: 1/4" = 1'-0"

0 2' 4' 8'

NOTES:
1. FOR GENERAL NOTES AND ABBREVIATIONS, SEE DWGS S-001, S-002, S-003.
2. REFER TO TYPICAL CONCRETE DETAILS ON DWG S-301 FOR OPENINGS LESS THAN 3'-0" x 3'-0".
3. COORDINATE OPENING LOCATIONS AND SIZES WITH ARCHITECTURAL DRAWINGS.
4. BARS SHOWN ARE IN ADDITION TO TYP WALL REINF.

US ARMY CORPS OF ENGINEERS
OMAHA DISTRICT

SYM.	DATE	DESCRIPTION	SYM.	DATE	DESCRIPTION	APPR.

DESIGNED BY: ESS
DWN BY: CGM
CKD BY: EBB
SUBMITTED BY: -
FILE NAME: MI4S:201
SIZE: 34X22
PLOT SCALE: AS INDICATED
DATE: APRIL 2016
SOLICITATION NO.: W912BF-16-B-0007
CONTRACT NO.: -
FILE NUMBER: AF212-220
PLOT DATE: 4/22/16

U.S. ARMY ENGINEER DISTRICT
CORPS OF ENGINEERS
OMAHA, NEBRASKA

BURNS & McDONNELL
8201 NORMAN CENTER DR. #300
BLOOMINGTON, MN 55437
952-656-6003

FY15 P-341 CONSTRUCT ADDITION B1134
MINOT AFB, NORTH DAKOTA
PN: QJVF143101

ELEVATIONS

SHEET IDENTIFICATION NUMBER
S-201

4/22/2016 1:59:21 PM
COPYRIGHT © 2016 BURNS & McDONNELL ENGINEERING COMPANY, INC.

NOTES:
1. FOR GENERAL NOTES AND ABBREVIATIONS, SEE DWGS S-001, S-002, S-003.
2. REFER TO TYPICAL CONCRETE DETAILS ON DWG S-301 FOR OPENINGS LESS THAN 3'-0" x 3'-0".
3. COORDINATE OPENING LOCATIONS AND SIZES WITH ARCHITECTURAL DRAWINGS.
4. BARS SHOWN ARE IN ADDITION TO TYP WALL REINF.

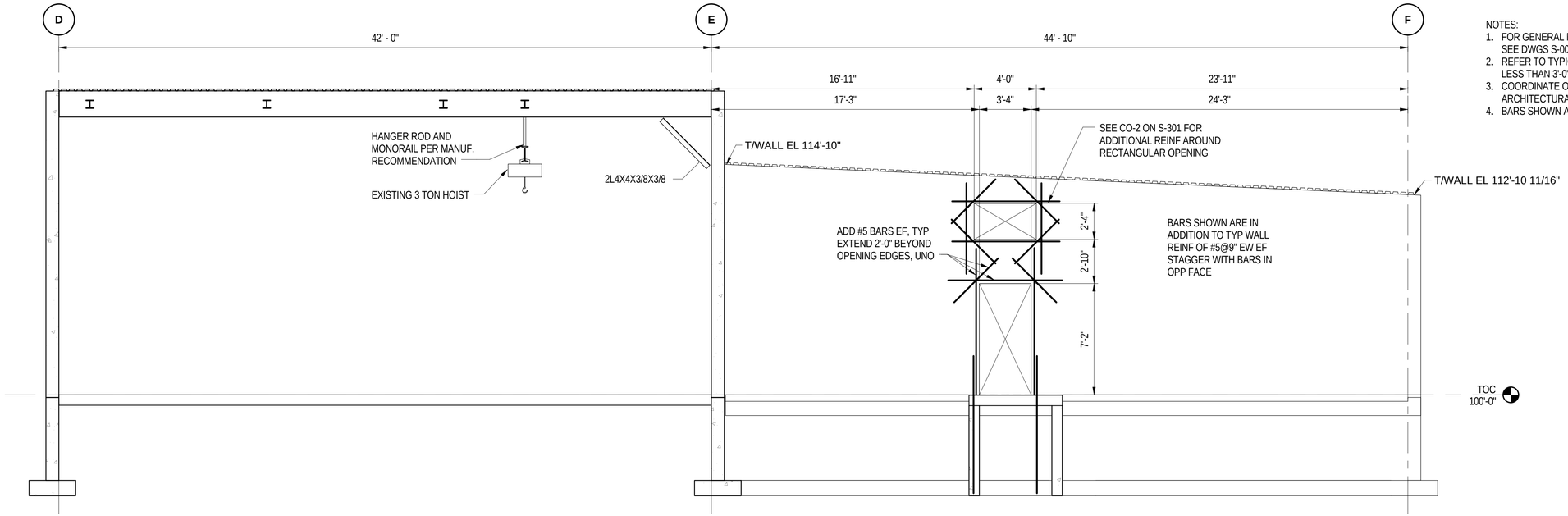

C1 ELEVATION/SECTION - GRID 5
SCALE: 1/4" = 1'-0"

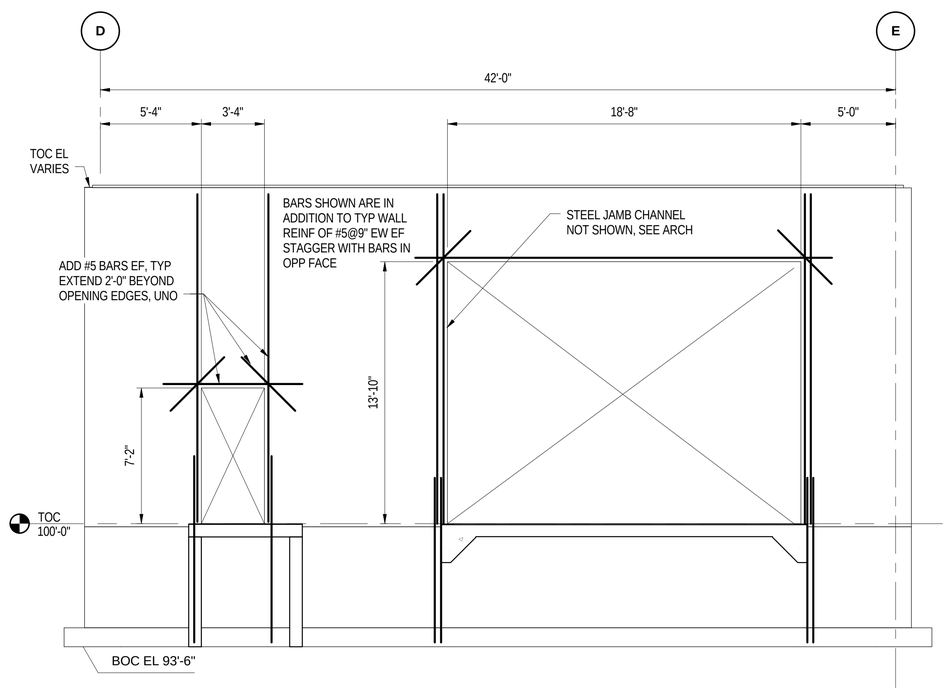

A1 ELEVATION - GRID 6
SCALE: 1/4" = 1'-0"

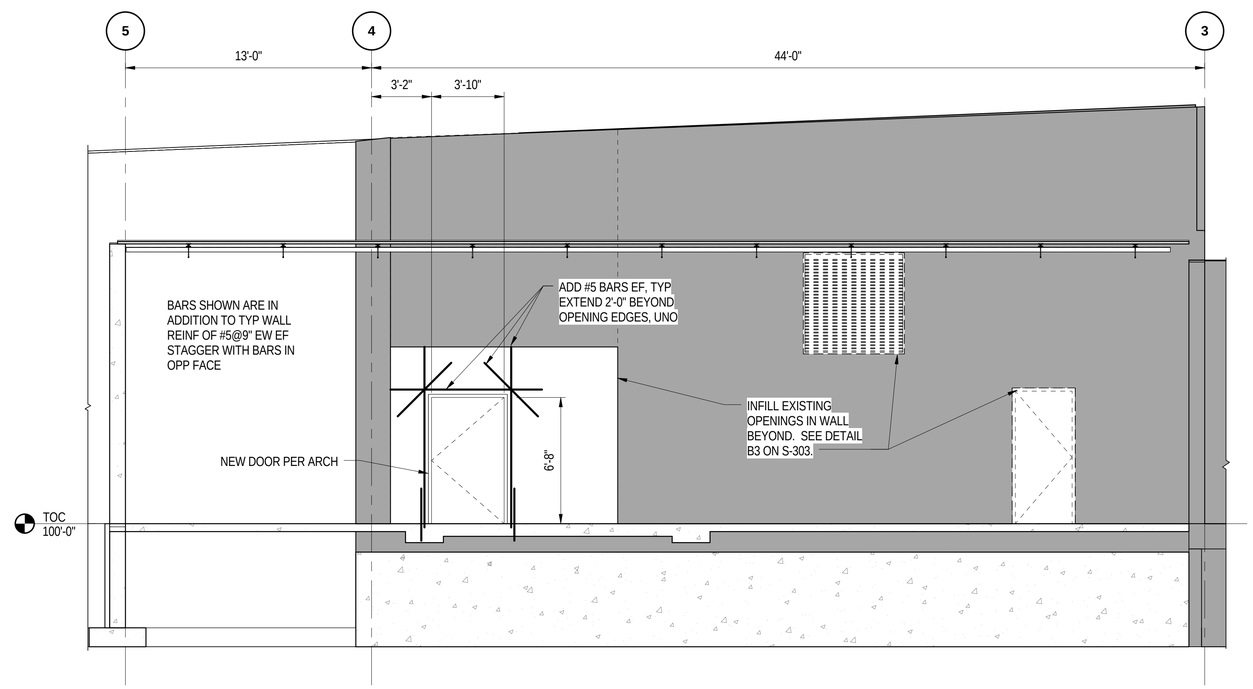

A3 PARTIAL ELEVATION - GRID E
SCALE: 1/4" = 1'-0"

0 2' 4' 8'

US ARMY CORPS OF ENGINEERS
OMAHA DISTRICT

SYM.	DATE	DESCRIPTION	SYM.	DATE	DESCRIPTION	APPR.

DESIGNED BY: ESB
DWN BY: CGM
CKD BY: EBB
SUBMITTED BY: -
FILE NAME: MI4BS:202
DATE: APRIL 2016
SOLICITATION NO.: W912BF-16-B-0007
CONTRACT NO.: -
FILE NUMBER: AF212-220
SIZE: 34X22
PLOT SCALE: AS INDICATED
PLOT DATE: 4/22/16

U.S. ARMY ENGINEER DISTRICT
CORPS OF ENGINEERS
OMAHA, NEBRASKA

BURNS & McDONNELL
8201 NORMAN CENTER DR. #300
BLOOMINGTON, MN 55437
952-656-6003

FY15 P-341 CONSTRUCT ADDITION B1134
MINOT AFB, NORTH DAKOTA
PN: QJVF143101

ELEVATIONS

SHEET IDENTIFICATION NUMBER
S-202

4/22/2016 1:59:22 PM
COPYRIGHT © 2016 BURNS & McDONNELL ENGINEERING COMPANY, INC.

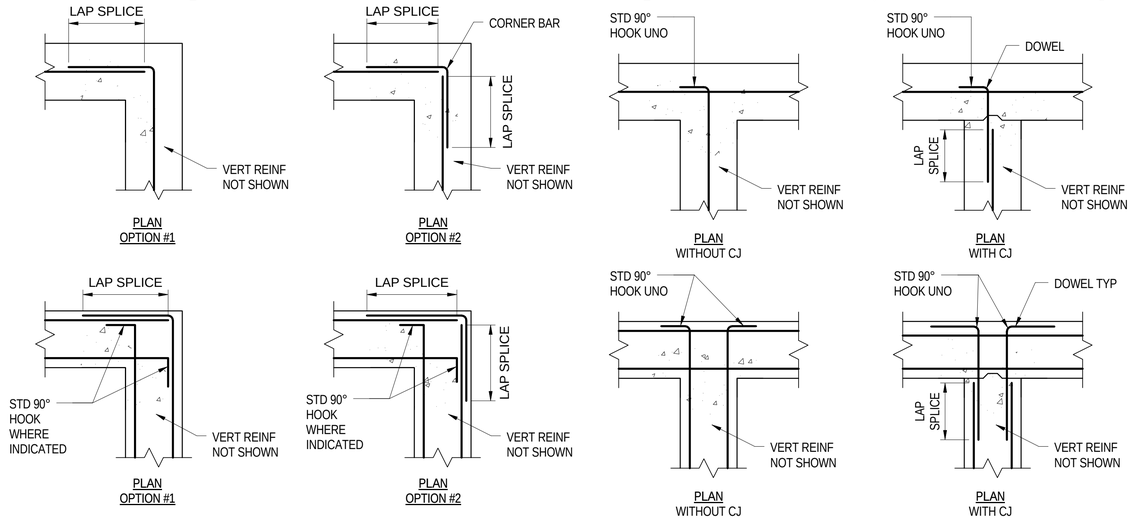

HORIZONTAL WALL/BEAM REINFORCEMENT DETAILS - CORNERS
SEE CORNER REINFORCEMENT NOTE 1

HORIZONTAL WALL/BEAM REINFORCEMENT DETAILS - INTERSECTIONS
SEE CORNER REINFORCEMENT NOTE 2

CORNER REINFORCEMENT NOTES:
1. UNLESS OTHERWISE INDICATED, THE CONTRACTOR HAS THE OPTION OF REINFORCING CORNERS IN ACCORDANCE WITH OPTION #1 OR OPTION #2.
2. UNLESS OTHERWISE INDICATED, THE CONTRACTOR HAS THE OPTION OF CONSTRUCTING INTERSECTIONS WITH OR WITHOUT CONSTRUCTION JOINTS. REINFORCE PER APPLICABLE DETAIL.

C1 STANDARD REINF DETAILS
SCALE: NTS

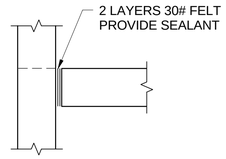

TYPICAL ISOLATION JOINT (IJ)

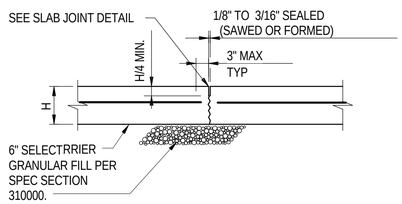

CONTRACTION JOINT (CJ-1)

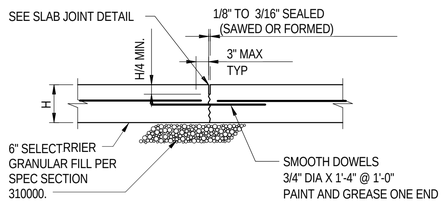

CONTRACTION JOINT (CJ-2)

C3 TYPICAL CONC JOINTS
SCALE: NTS

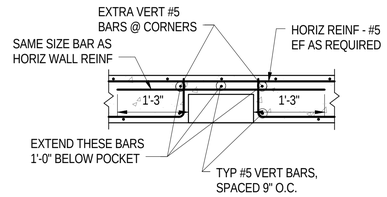

D4 TYP BEAM POCKET REINF
SCALE: 3/4" = 1'-0"

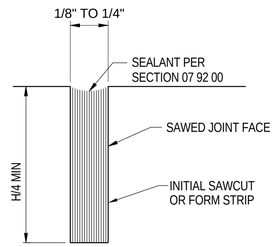

C5 TYP SLAB JOINT DETAIL
SCALE: NTS

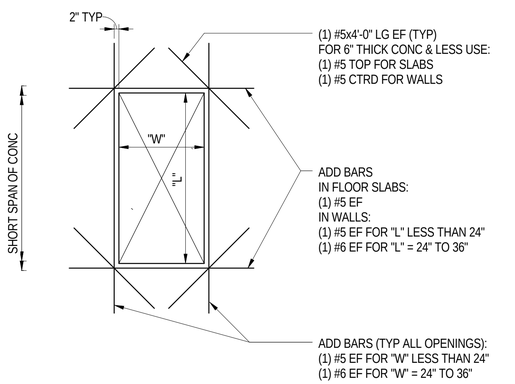

CO-2
RECTANGULAR OPENING IN CONCRETE SLAB (UNFRAMED) OR WALL

NOTES:
1. MINIMUM LENGTH OF ALL BARS SHALL BE ("L" OR "W") + 3'-6" WITH BARS CENTERED ON OPENING.
2. FOR OPENINGS ("L" OR "W") LESS THAN 12", THE ADD BARS ARE NOTREQUIRED IF NO REINFORCING IS CUT BY THE OPENING.
3. SHORT SPAN OF CONC = LESSER DISTANCE BETWEEN SUPPORTMEMBERS.
4. REINFORCE OPENINGS WITH "L" OR "W" LARGER THAN 3'-0" AS INDICATED ON THE DRAWINGS. IF NOT INDICATED, CONTACT THE ENGINEER.
5. FOR CONCRETE OPENINGS THROUGH STEEL DECKING, BLOCK OUT CONCRETE WITHIN OPENING WITH STYROFOAM OR OTHER APPROVED MATERIAL AND SEAL WITH DUCT TAPE. CUT DECK TO MATCH INSIDE DIMENSIONS OF OPENING AFTER CONCRETE HAS SET FOR 7 DAYS.
6. METAL DECKING HOLES AND OPENINGS SHALL NOT BE CUT UNTIL IMMEDIATELY PRIOR TO BEING PERMANENTLY FILLED WITH THE EQUIPMENT OR STRUCTURE INTENDED TO FULFILL ITS SPECIFIC USE OR SHALL BE IMMEDIATELY COVERED. SEE OSHA SECTION 29 CFR 1926 SUBPART R.
7. REINFORCING SHOWN REPRESENTS THE MINIMUM REQUIRED AT ALL CO-2 OPENINGS UNO.

A1 DETAIL
SCALE: NTS

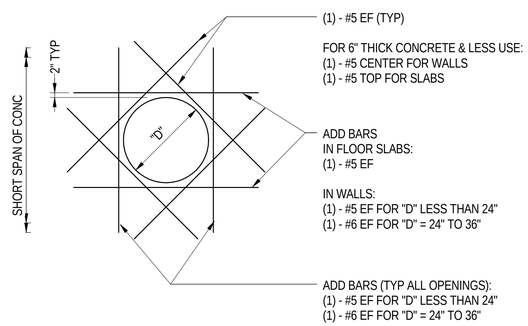

CO-1
CIRCULAR OPENING IN CONCRETE SLAB (UNFRAMED) OR WALL

NOTES:
1. MINIMUM LENGTH OF ALL BARS SHALL BE "D" + 3'-6" WITH BARS CENTERED ON OPENING.
2. FOR OPENINGS LESS THAN 12" IN DIAMETER, THE ADD BARS ARE NOT REQUIRED IF NO REINFORCING IS CUT BY THE OPENING.
3. SHORT SPAN OF SLAB = LESSER DISTANCE BETWEEN SUPPORT MEMBERS.
4. REINFORCE OPENINGS WITH "D" LARGER THAN 3'-0" AS INDICATED ON THE DRAWINGS. IF NOT INDICATED, CONTACT THE ENGINEER.
5. FOR CONCRETE OPENINGS THROUGH STEEL DECKING, BLOCK OUT CONCRETE WITHIN OPENING WITH STYROFOAM OR OTHER APPROVED MATERIAL AND SEAL WITH DUCT TAPE. CUT DECK TO MATCH INSIDE DIMENSIONS OF OPENING AFTER CONCRETE HAS SET FOR 7 DAYS.
6. METAL DECKING HOLES AND OPENINGS SHALL NOT BE CUT UNTIL IMMEDIATELY PRIOR TO BEING PERMANENTLY FILLED WITH THE EQUIPMENT OR STRUCTURE INTENDED TO FULFILL ITS SPECIFIC USE OR SHALL BE IMMEDIATELY COVERED. SEIOSHA SECTION 29 CFR 1926 SUBPART R.
7. REINFORCING SHOWN REPRESENTS THE MINIMUM REQUIRED AT ALL CO-1 OPENINGS UNO.

A2 DETAIL
SCALE: NTS

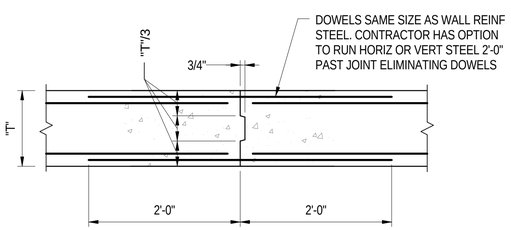

NOTE:
1. THIS DETAIL IS APPLICABLE TO FORMING OF VERT JOINTS & REINF OF BOTH HORIZ. & VERT JOINTS. FOR FORMING OF JOINTS SEE SPECS.

B3 TYPICAL WALL JOINT
SCALE: NTS

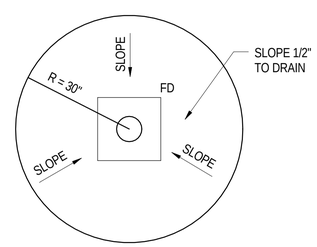

TYPICAL FLOOR DRAIN

A3 DETAIL
SCALE: NTS

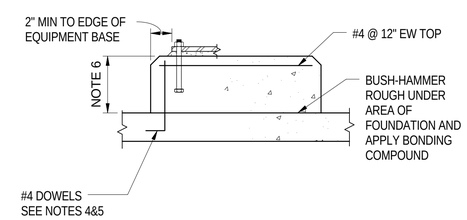

EQUIPMENT PAD - EP-1

NOTES:
1. PROVIDE EP-1 FOR INTERIOR EQPT AND EF-1 FOR EXTERIOR EQPT WHERE INDICATED ON OTHER DISCIPLINE DWGS. PAD SIZE SHALL BE PER EQPT MANUFACTURER.
2. ANCHOR BOLTS SHALL BE PER EQPT MANUFACTURER. EQPT ANCHOR BOLTS SHALL BE STANDARD TYPE V OR VI HOOKED BOLTS, UNLESS OTHERWISE RECOMMENDED BY EQPT MFR.
3. EQPT SHALL BE GROUTED IN PLACE W/ NON-SHRINK GROUT UNLESS OTHERWISE RECOMMENDED BY EQPT MFR.
4. FOR EP-1, PROVIDE NUMBER OF DOWELS TO MATCH TOTAL CROSS-SECTIONAL AREA OF ANCHOR BOLTS, EQUALLY SPACED AROUND PAD, EXCEPT THAT SPACING OF DOWELS SHALL NOT EXCEED 12".
5. FOR EP-1, IF FLOOR SLAB IS CONSTRUCTED BEFORE DOWELS ARE PLACED, DOWELS SHALL BE EPOXY GROUTED INTO FLOOR SLAB.
6. FOR EP-1, HEIGHT OF PAD ABOVE SURROUNDING FLOOR SLAB SHALL BE 4" MIN FOR PADS W/ 1" DIA OR SMALLER ANCHOR BOLTS OR 6" MIN FOR PADS W/ ANCHOR BOLTS LARGER THAN 1" DIA.

A4 SECTION
SCALE: NTS

US ARMY CORPS OF ENGINEERS
OMAHA DISTRICT

SYM.	DATE	DESCRIPTION	SYM.	DATE	DESCRIPTION	APPR.

DESIGNED BY: ESB | DATE: APRIL 2016
DWN BY: CGM | CKD BY: BBB | SOLICITATION NO.: W912BF-16-B-0007
SUBMITTED BY: - | CONTRACT NO.: -
FILE NAME: MIA8S-301 | FILE NUMBER: AF212-220
SIZE: 34X22 | PLOT SCALE: AS INDICATED | PLOT DATE: 4/22/16

U.S. ARMY ENGINEER DISTRICT CORPS OF ENGINEERS OMAHA, NEBRASKA

BURNS & McDONNELL
8201 NORMAN CENTER DR. #300
BLOOMINGTON, MN 55437
952-656-6003

FY15 P-341 CONSTRUCT ADDITION B1134
MINOT AFB, NORTH DAKOTA
PN: QJVF143101

STANDARD CONCRETE DETAILS

SHEET IDENTIFICATION NUMBER
S-301

4/22/2016 1:59:23 PM
COPYRIGHT © 2016 BURNS & McDONNELL ENGINEERING COMPANY, INC.

NOTES:
1. FOR GENERAL NOTES AND ABBREVIATIONS, SEE DWGS S-001, S-002, S-003.
2. FOR TYPICAL CONCRETE DETAILS, SEE DWG S-301.
3. COORDINATE OPENING LOCATIONS AND SIZES WITH ARCHITECTURAL DRAWINGS.
4. VAPOR BARRIER PER SPEC SECTION 03 30 00.00 10.
5. 6" SELECT GRANULAR FILL PER SPEC SECTION 31 00 00.

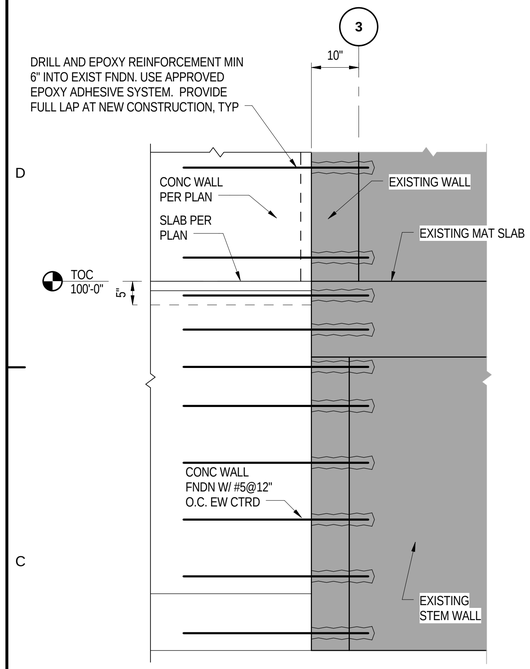

C1 SECTION
SCALE: 3/4" = 1'-0"

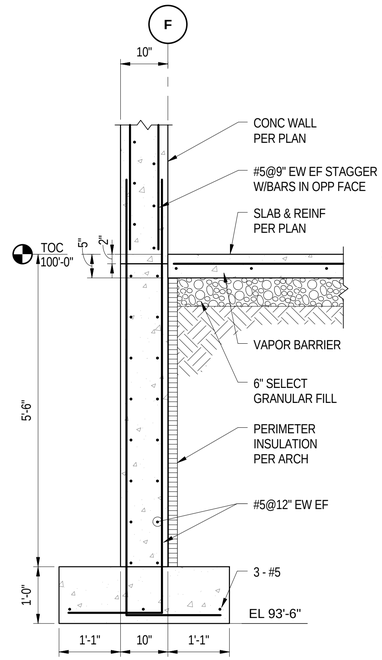

C2 SECTION
SCALE: 3/4" = 1'-0"

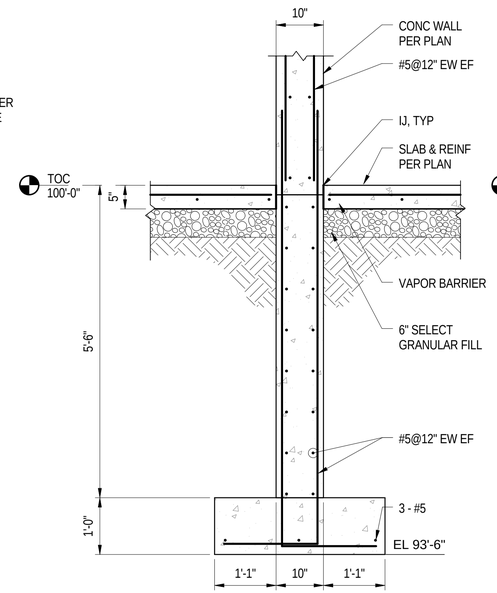

C3 SECTION
SCALE: 3/4" = 1'-0"

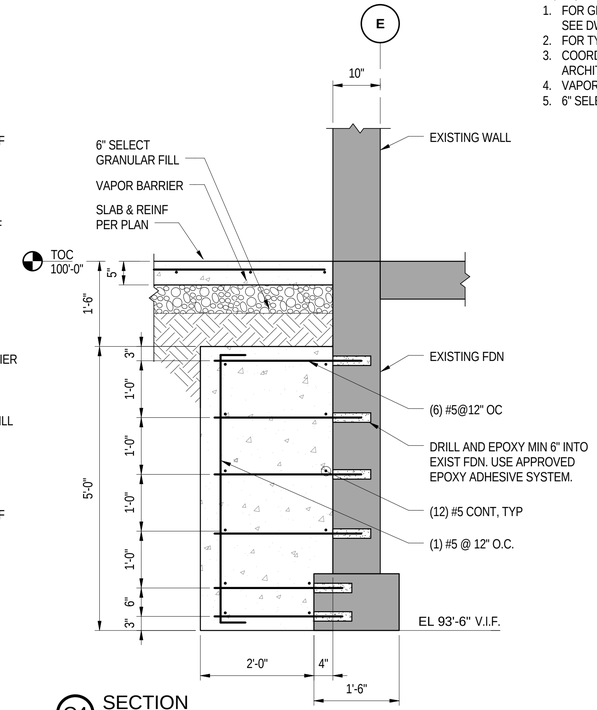

C4 SECTION
SCALE: 3/4" = 1'-0"

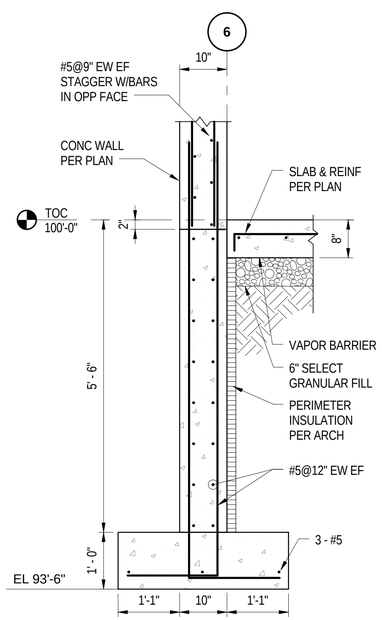

A1 SECTION
SCALE: 3/4" = 1'-0"

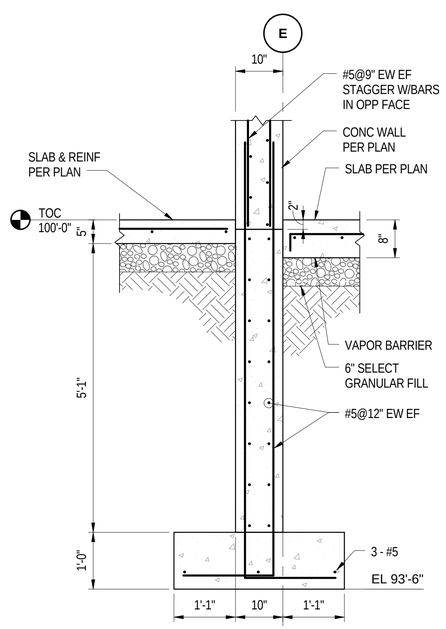

A2 SECTION
SCALE: 3/4" = 1'-0"

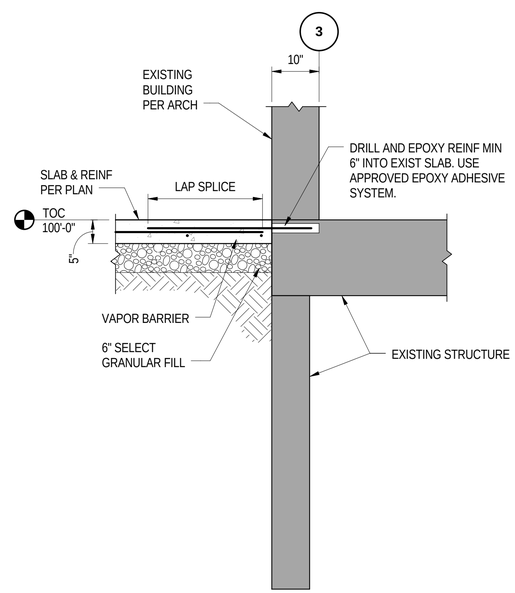

A3 SECTION
SCALE: 3/4" = 1'-0"

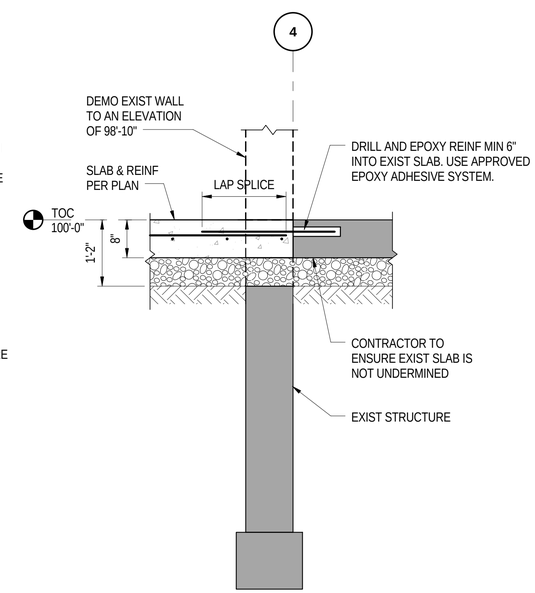

A4 SECTION
SCALE: 3/4" = 1'-0"

US ARMY CORPS OF ENGINEERS
OMAHA DISTRICT

SYM.	DATE	DESCRIPTION	SYM.	DATE	DESCRIPTION	APPR.

DESIGNED BY: ESB
DRAWN BY: CGM
CKD BY: RBB
SUBMITTED BY: -
DATE: APRIL 2016
SOLICITATION NO.: W912BF-16-B-0007
CONTRACT NO.: -
FILE NAME: MI48S-302
FILE NUMBER: AF212-220
SIZE: 34X22
PLOT SCALE: AS INDICATED
PLOT DATE: 4/22/16

U.S. ARMY ENGINEER DISTRICT
CORPS OF ENGINEERS
OMAHA, NEBRASKA

BURNS & McDONNELL
8201 NORMAN CENTER DR. #300
BLOOMINGTON, MN 55437
952-656-6003

FY15 P-341 CONSTRUCT ADDITION B1134
MINOT AFB, NORTH DAKOTA
PN: QJVF143101

SLAB AND FOUNDATION DETAILS

SHEET IDENTIFICATION NUMBER
S-302

4/22/2016 1:59:24 PM
COPYRIGHT © 2016 BURNS & McDONNELL ENGINEERING COMPANY, INC.

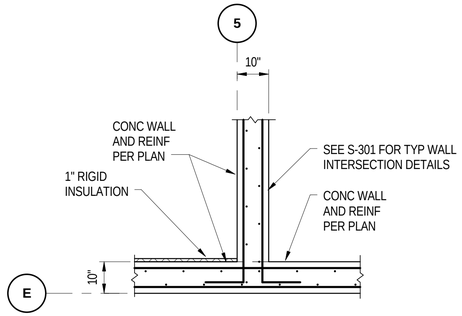

C1 DETAIL
SCALE: 1/2" = 1'-0"

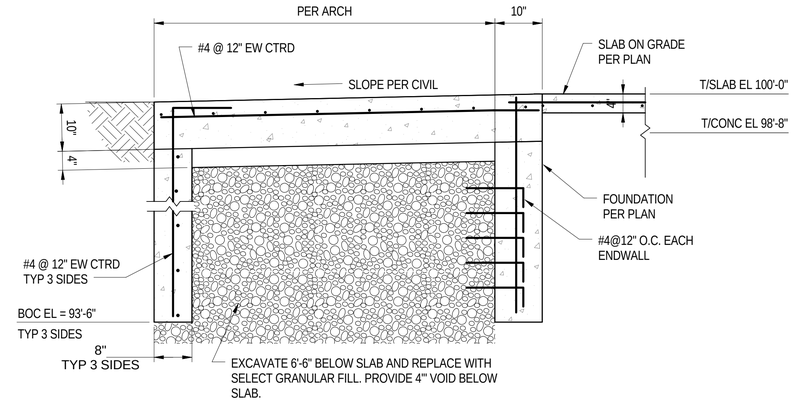

NOTE: REFER TO ARCH FOR DIMENSIONS

C3 TYPICAL STOOP DETAIL @ T/SLAB EL 100'-0"
SCALE: NTS

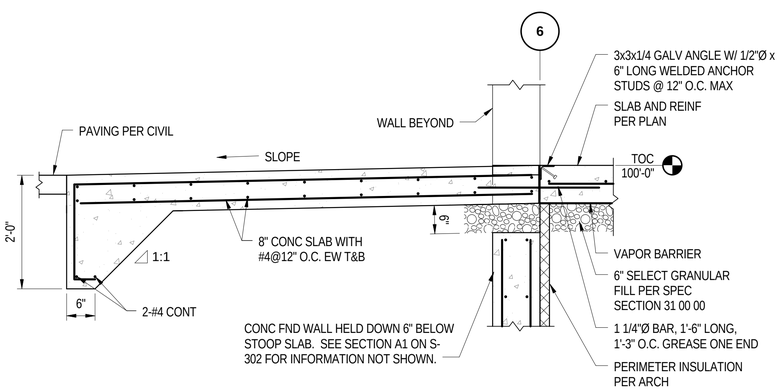

B1 SECTION
SCALE: 3/4" = 1'-0"

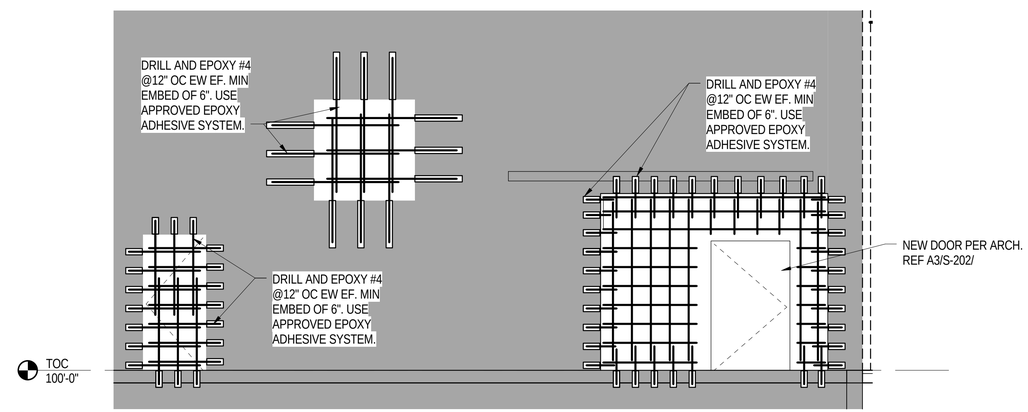

B3 DETAIL
SCALE: NTS

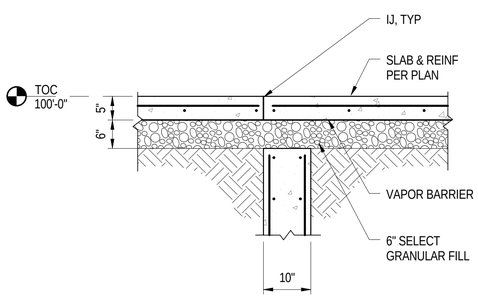

A1 SECTION
SCALE: 3/4" = 1'-0"

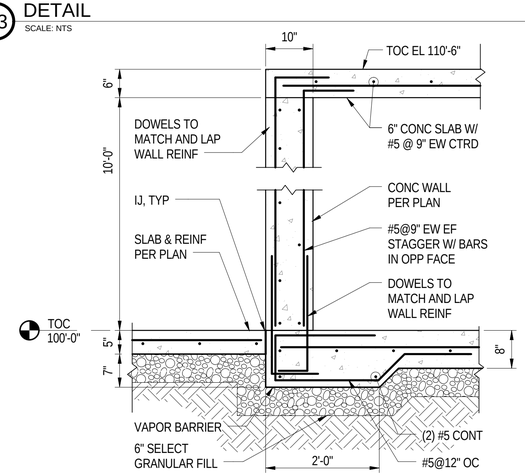

NOTE: TYP 3 SIDES

A3 SECTION
SCALE: 3/4" = 1'-0"

US ARMY CORPS
OF ENGINEERS
OMAHA DISTRICT

SYM.	DATE	DESCRIPTION	APPR.	SYM.	DATE	DESCRIPTION	APPR.

DESIGNED BY: ESS
DRAWN BY: CGM
SUBMITTED BY: -
FILE NAME: MI4SS:303
SIZE: 34X22
PLOT SCALE: AS INDICATED
DATE: APRIL 2016
SOLICITATION NO.: W912BF-16-B-0007
CONTRACT NO.: -
FILE NUMBER: AF212-220
PLOT DATE: 4/22/16

U.S. ARMY ENGINEER DISTRICT
CORPS OF ENGINEERS
OMAHA, NEBRASKA

BURNS & McDONNELL
8201 NORMAN CENTER DR. #300
BLOOMINGTON, MN 55437
952-656-6003

FY15 P-341 CONSTRUCT ADDITION B1134
MINOT AFB, NORTH DAKOTA
PN: QJVF143101

CONCRETE DETAILS

SHEET
IDENTIFICATION
NUMBER
S-303

4/22/2016 1:59:27 PM
COPYRIGHT © 2016 BURNS & McDONNELL ENGINEERING COMPANY, INC.

ROOF JOIST NOTES:

1. ALL JOISTS SHALL BE CAPABLE OF SUPPORTING AN ADDITIONAL 300# CONCENTRATED LIVE LOAD LOCATED AT ANY POINT ON THE TOP OR BOTTOM CHORDS WITHOUT THE JOIST REINFORCING DETAIL IN ADDITION TO ALL LOADS SHOWN IN LOADING DIAGRAM.
2. DEAD LOADS TABULATED DO NOT INCLUDE AN ALLOWANCE FOR JOIST SELF-WEIGHT.
3. JOIST DEFLECTION SHALL NOT EXCEEED 1/240 OF THE SPAN DUE TO TOTAL LOAD NOR 1/360 OF THE SPAN DUE TO LIVE LOAD.
4. STEEL JOISTS HAVE BEEN PRELIMINARY SIZED FOR GRAVITY LOADS ONLY. CONTRACTOR SHALL CHECK AND RESIZE JOISTS AND PROVIDE ADDITIONAL BRIDGING AS REQUIRED FOR ALL UPLIFT LOADS INDICATED ON DRAWING S-001. CONTRACTOR SHALL ALSO DESIGN ALL BRIDGING MEMBERS AND CONNECTIONS FOR STEEL JOISTS, END CONDITIONS, AND BRIDGING.
5. STEEL JOISTS SHALL BE INSTALLED TO FORM A FLAT PLANE FOR ROOF DECK ATTACHMENT. PROVIDE JOIST MODIFICATIONS AND SHIMS AS REQUIRED.
6. UNLESS NOTED OTHERWISE, ALL JOISTS SUPPORTING THE ROOF DECK SHALL BE FIELD WELDED TO SUPPORTING MEMBERS. THESE WELDS SHALL BE VERIFIED BY THE JOIST MANUFACTURER. FOR DESIGN WIND PRESSURES SEE DRAWING S-001.

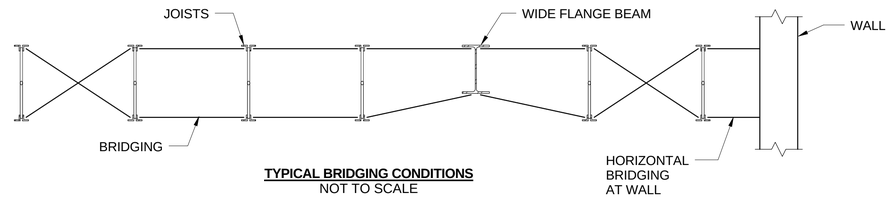

TYPICAL BRIDGING CONDITIONS
NOT TO SCALE

NOTE:
BRIDGING SHALL BE PER SJI SPECIFICATIONS

US ARMY CORPS OF ENGINEERS
OMAHA DISTRICT

SYM.	DATE	DESCRIPTION	SYM.	DATE	DESCRIPTION	APPR.

U.S. ARMY ENGINEER DISTRICT
CORPS OF ENGINEERS
OMAHA, NEBRASKA

BURNS & McDONNELL
8201 NORMAN CENTER DR. #300
BLOOMINGTON, MN 55437
952-656-6003

DESIGNED BY: ESS	DATE: APRIL 2016
DWN BY: CGM	CKD BY: EBB
SOLICITATION NO.: W912BF-16-B-0007	
SUBMITTED BY: -	CONTRACT NO.: -
FILE NAME: MI48S:304	FILE NUMBER: AF212-220
SIZE: 34X22	PLOT SCALE: AS INDICATED
PLOT DATE: 4/22/16	

FY15 P-341 CONSTRUCT ADDITION B1134
MINOT AFB, NORTH DAKOTA
PN: QJVF143101

STANDARD ROOF DECK & JOIST DETAILS

SHEET IDENTIFICATION NUMBER
S-304

4/22/2016 1:59:27 PM
COPYRIGHT © 2016 BURNS & McDONNELL ENGINEERING COMPANY, INC.

NOTES:
1. FOR GENERAL NOTES AND ABBREVIATIONS, SEE DWGS S-001, S-002, S-003.
2. FOR TYPICAL CONCRETE DETAILS, SEE DWG S-301.
3. COORDINATE OPENING LOCATIONS AND SIZES WITH ARCHITECTURAL DRAWINGS.

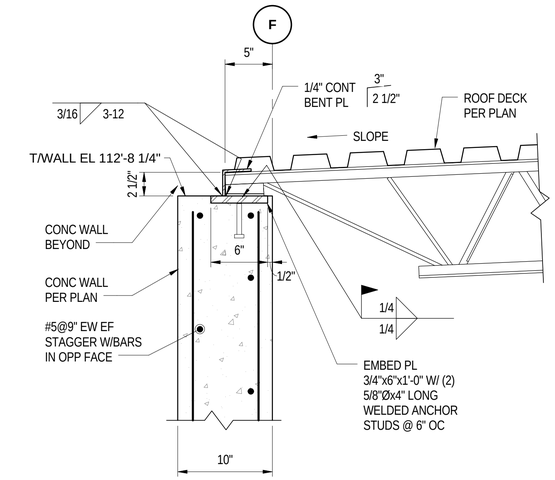

C1 SECTION
SCALE: 1 1/2" = 1'-0"

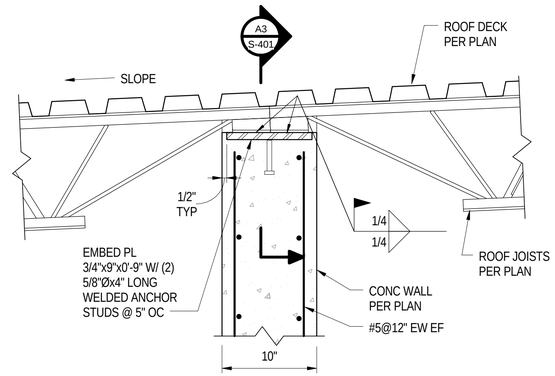

C2 SECTION
SCALE: 1 1/2" = 1'-0"

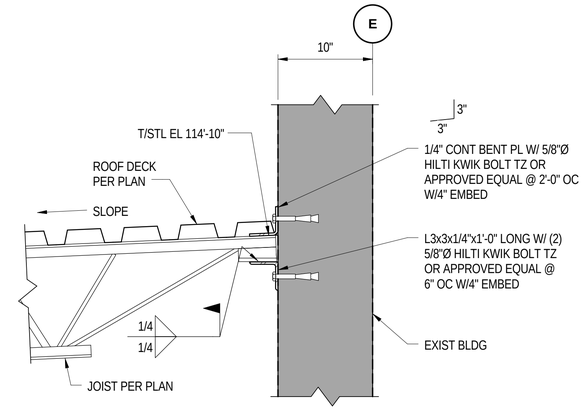

C3 SECTION
SCALE: 1 1/2" = 1'-0"

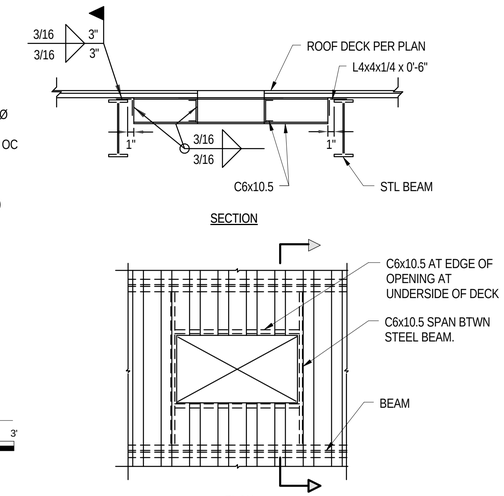

OPENING GREATER THAN 24" AND UP TO 72"

NOTES:
1. SEE ARCH, MECH, AND ELEC DWGS FOR LOCATIONS AND SIZES OF OPENINGS.

C4 ROOF DECK OPENING DETAILS
SCALE: NTS

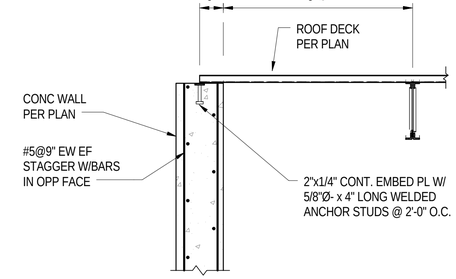

B1 SECTION
SCALE: 3/4" = 1'-0"

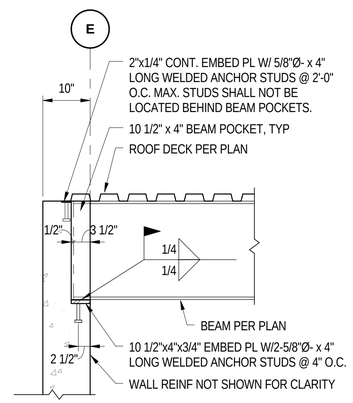

B2 SECTION
SCALE: 3/4" = 1'-0"

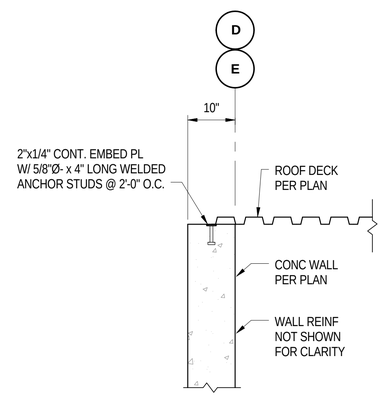

B3 SECTION
SCALE: 3/4" = 1'-0"

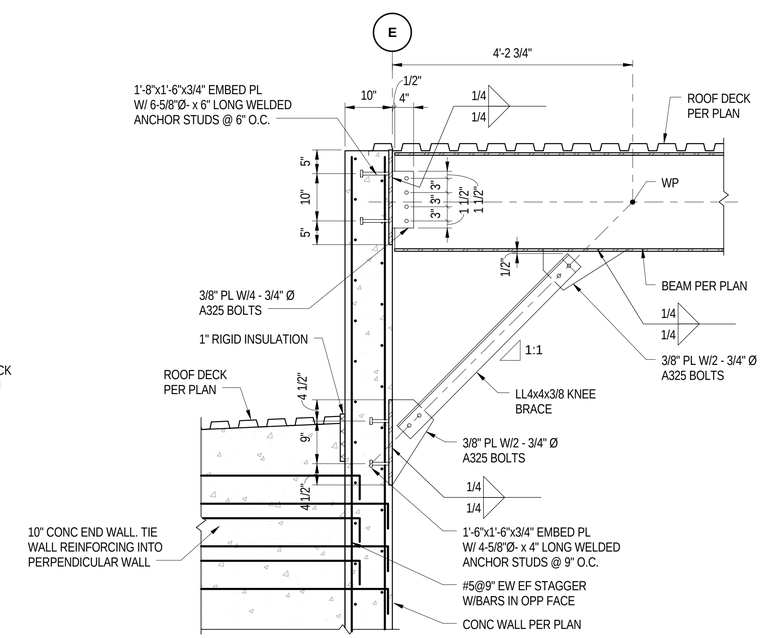

A4 SECTION
SCALE: 3/4" = 1'-0"

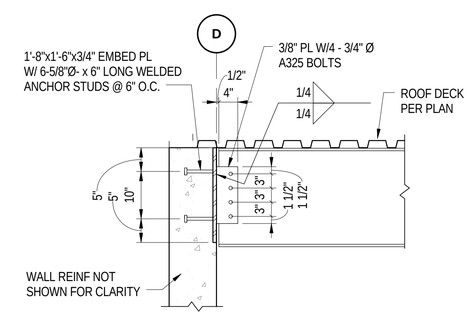

A1 SECTION
SCALE: 3/4" = 1'-0"

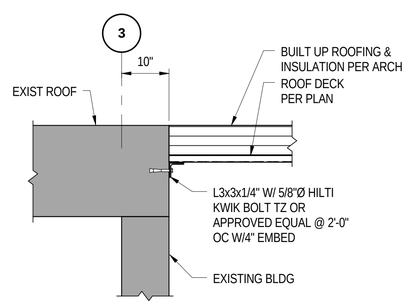

A2 SECTION
SCALE: 3/4" = 1'-0"

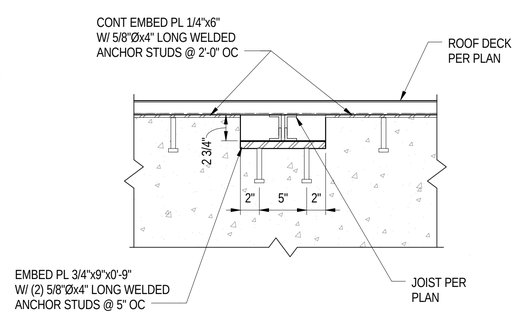

A3 DETAIL
SCALE: 1 1/2" = 1'-0"

US ARMY CORPS OF ENGINEERS
OMAHA DISTRICT

SYM.	DATE	DESCRIPTION	SYM.	APPR.	DESCRIPTION	DATE	APPR.

DESIGNED BY: ESD | DWN BY: CGM | CKD BY: BBB | SUBMITTED BY: - | DATE: APRIL 2016 | SOLICITATION NO.: W912BF-16-B-0007 | CONTRACT NO.: - | FILE NUMBER: AF212-220 | FILE NAME: M/I&S-401 | PLOT SCALE: AS INDICATED | SIZE: 34X22 | PLOT DATE: 4/22/16

U.S. ARMY ENGINEER DISTRICT
CORPS OF ENGINEERS
OMAHA, NEBRASKA

BURNS & McDONNELL
8201 NORMAN CENTER DR. #300
BLOOMINGTON, MN 55437
952-656-6003

FY15 P-341 CONSTRUCT ADDITION B1134
MINOT AFB, NORTH DAKOTA
PN: QJVF143101

ROOF FRAMING DETAILS

SHEET IDENTIFICATION NUMBER
S-401

4/22/2016 1:59:29 PM
COPYRIGHT © 2016 BURNS & McDONNELL ENGINEERING COMPANY, INC.

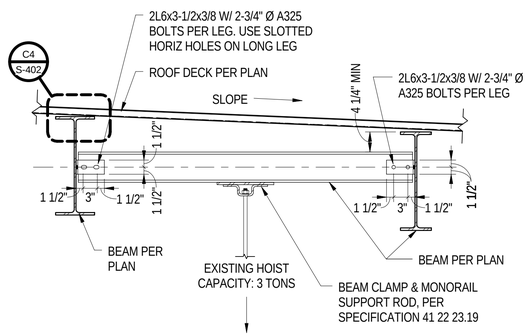

C1 SECTION
SCALE: 3/4" = 1'-0"
0 1' 2' 3'

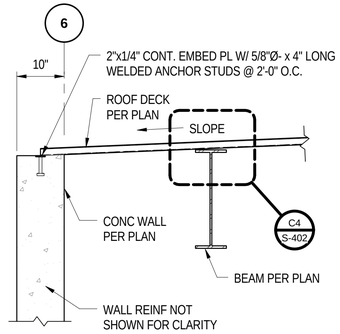

C2 SECTION
SCALE: 3/4" = 1'-0"
0 1' 2' 3'

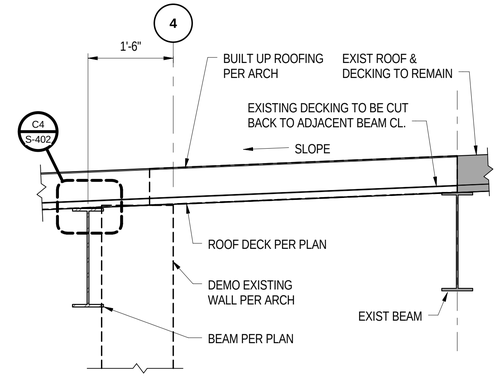

C3 SECTION
SCALE: 3/4" = 1'-0"
0 1' 2' 3'

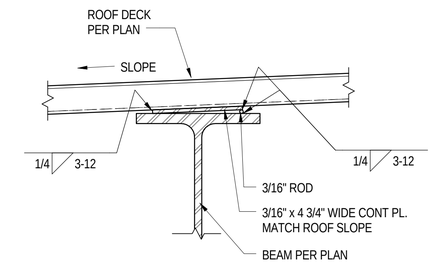

C4 DETAIL
SCALE: 3" = 1'-0"
0 3" 6" 9"

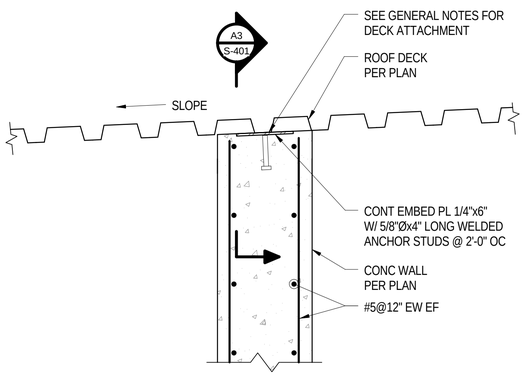

B1 SECTION
SCALE: 1 1/2" = 1'-0"
0 1/2' 1' 1 1/2'

US ARMY CORPS
OF ENGINEERS
OMAHA DISTRICT

SYM.	DATE	DESCRIPTION	DESCRIPTION	APPR.	SYM.	DATE	DESCRIPTION	APPR.

DESIGNED BY: ESB
DWN BY: CGM
CKD BY: BBB
SUBMITTED BY: -
DATE: APRIL 2016
GSD/CFA ACTION NO.: W912BF-16-B-0007
CONTRACT NO.: -
FILE NAME: MI48S-402
FILE NUMBER: AF212-220
SIZE: 34X22
PLOT SCALE: AS INDICATED
PLOT DATE: 4/22/16

U.S. ARMY ENGINEER DISTRICT
CORPS OF ENGINEERS
OMAHA, NEBRASKA

BURNS & McDONNELL
8201 NORMAN CENTER DR. #300
BLOOMINGTON, MN 55437
952-656-6003

FY15 P-341 CONSTRUCT ADDITION B1134
MINOT AFB, NORTH DAKOTA
PN: QJVF143101

ROOF FRAMING DETAILS

SHEET
IDENTIFICATION
NUMBER
S-402

4/22/2016 1:59:29 PM
COPYRIGHT © 2016 BURNS & McDONNELL ENGINEERING COMPANY, INC.

CALL OUT IDENTIFICATION

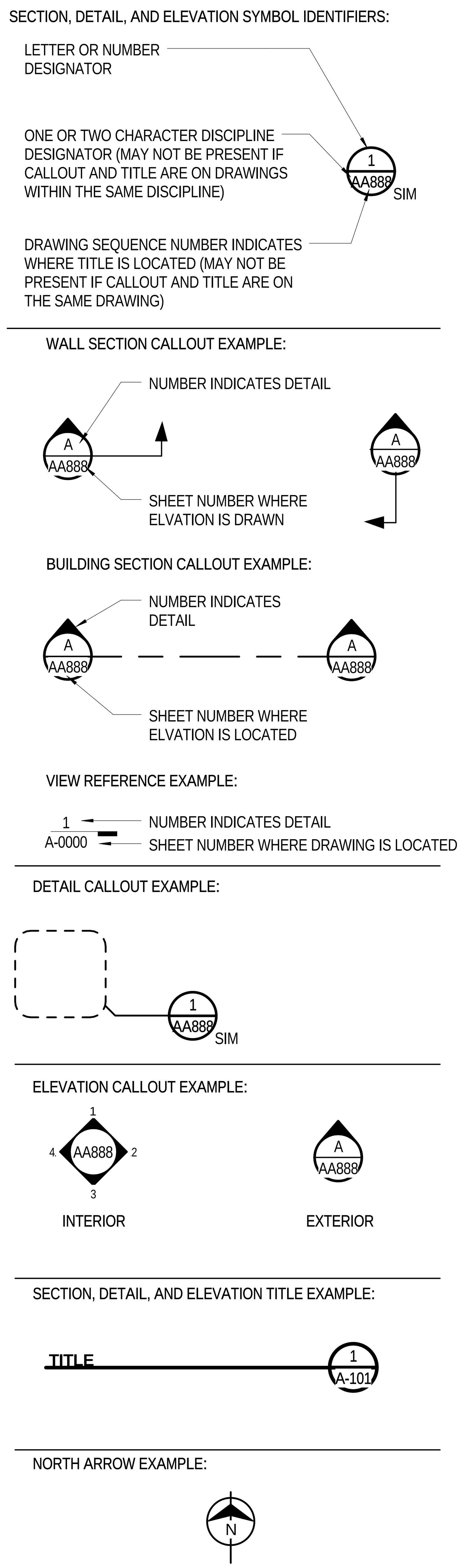

PLAN LEGEND

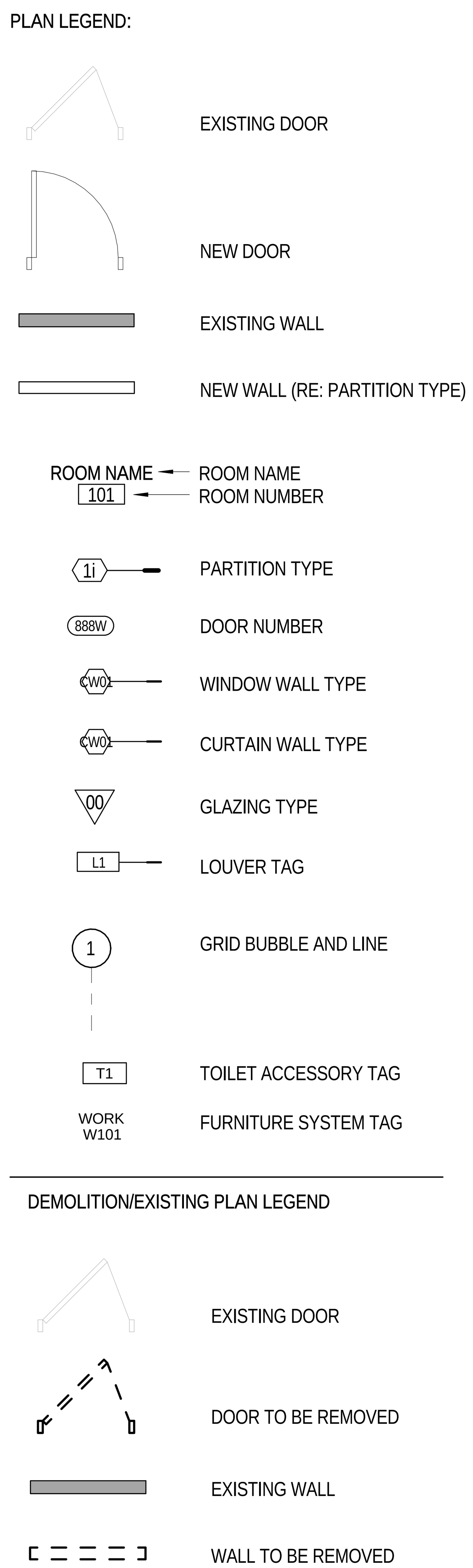

MATERIAL SYMBOLS

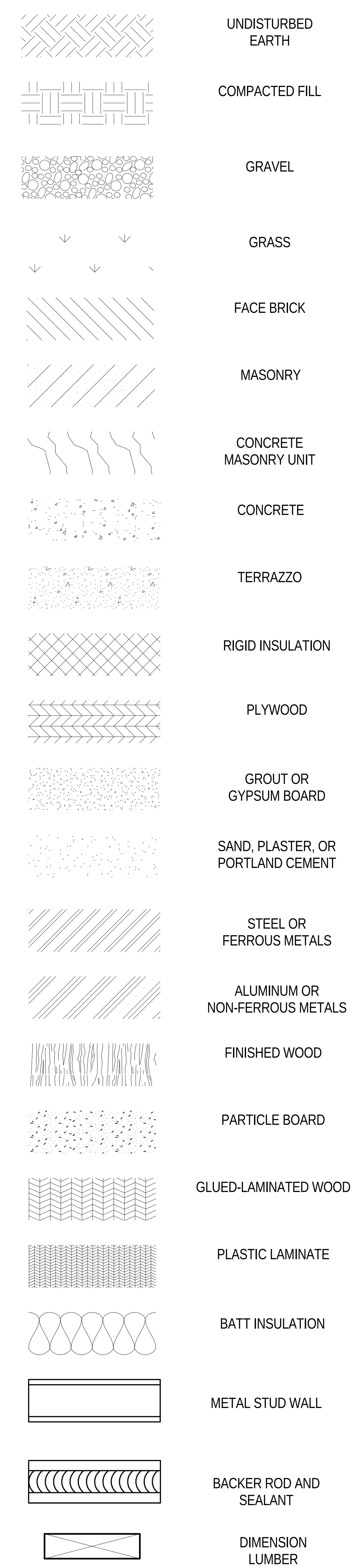

ABBREVIATIONS

SEE ADDITIONAL FINISH MATERIAL ABBREVIATIONS IN THE MATERIAL LEGEND, DRAWING A-201 AND A-601

	-A-
A/E	ARCHITECT/ENGINEER
ACOUST	ACOUSTICAL
ACT	ACOUSTICAL CEILING TILE
ADJ	ADJACENT, ADJUSTABLE
AFF	ABOVE FINISH FLOOR
AHJ	AUTHORITY HAVING JURISDICTION
ALT	ALTERNATE
ALUM	ALUMINUM
APPROX	APPROXIMATE
ARCH	ARCHITECTURE, ARCHITECT
	-B-
BD	BOARD
BITUM	BITUMINOUS
BLDG	BUILDING
BLKG	BLOCKING
BO	BOTTOM OF, AS IN "BO STEEL"
BTWN	BETWEEN
	-C-
CAB	CABINET
CID	COMPREHENSIVE INTERIOR DESIGN
CJ	CONTROL JOINT, CONSTRUCTION JOINT
CL	CENTER LINE
CLG	CEILING
CLR	CLEAR
CMU	CONCRETE MASONRY UNIT
CO	CLEANOUT
COL	COLUMN
COMM	COMMUNICATION
CONC	CONCRETE
CONSTR	CONSTRUCTION
CONT	CONTINUOUS
CONTR	CONTRACT, CONTRACTOR
COORD	COORDINATE
CORR	CORRUGATED OR CORRIDOR
CU	CUBIC
	-D-
DBL	DOUBLE
DEMO	DEMOLITION
DESCR	DESCRIPTION
DET	DETAIL
DIA	DIAMETER
DIAG	DIAGONAL
DIM	DIMENSION
DN	DOWN
DR	DOOR
DS	DOWNSPOUT
DWG	DRAWING
	-E-
E	EAST
EA	EACH
EEW	EMERGENCY EYEWASH
EEWS	EMERGENCY EYEWASH & SHOWER
EF	EXHAUST FAN
EJ	EXPANSION JOINT
EL	ELEVATION, AS IN HEIGHT
ELAST	ELASTOMERIC
ELEC	ELECTRIC / ELECTRICAL
ELEV	ELEVATOR, OR ELEVATION AS IN NORTH ELEV
EQ	EQUAL
EQUIP	EQUIPMENT
ETC	AND SO FORTH (ETCETERA)
EW	EACH WAY
EWC	ELECTRIC WATER COOLER
EXH	EXHAUST
EXIST	EXISTING
EXP	EXPANSION
EXT	EXTERIOR
	-F-
FD	FLOOR DRAIN
FDN	FOUNDATION
FE	FIRE EXTINGUISHER WITH WALL BRACKET
FEC	FIRE EXTINGUISHER CABINET
FF	FINISH FLOOR
FF&E	FURNITURE, FIXTURES & EQUIPMENT
FHC	FIRE HOSE CABINET (WITH EXTINGUISHER & BRACKET)
FHR	FIRE HOSE REEL (WITH EXTINGUISHER & BRACKET)
FIN	FINISHED, FINISH
FLR	FLOOR
FT	FEET / FOOT
°F	FAHRENHEIT
	-G-
GA	GAUGE
GALV	GALVANIZED
GRTG	GRATING
GYP	GYPSUM
GYP BD	GYPSUM BOARD
	-H-
H	HIGH
HD	HAND
HDWR	HARDWARE
HM	HOLLOW METAL
HORIZ	HORIZONTAL
HT	HEIGHT
HVAC	HEATING, VENTILATION & AIR CONDITIONING
	-I-
ID	INSIDE DIAMETER
IN	INCH
INSUL	INSULATION
INT	INTERIOR
	-J-
JAN	JANITOR'S CLOSET

	-L-
L	LEFT, LONG, LENGTH
LAB	LABORATORY
LAT	LATITUDE
LAV	LAVATORY
LB or #	POUND
LH	LEFT HAND
LONG	LONGITUDE
LVR	LOUVER
	-M-
M	METER
MAINT	MAINTENANCE
MAS	MASONRY
MATL	MATERIAL
MAX	MAXIMUM
MECH	MECHANICAL
MFR	MANUFACTURER
MIN	MINIMUM
MISC	MISCELLANEOUS
MO	MASONRY OPENING
MTD	MOUNTED
MTL	METAL
	-N-
N	NORTH
N/A	NOT APPLICABLE
NIC	NOT IN CONTRACT
NO	NUMBER
NOM	NOMINAL
NTP	NOTICE TO PROCEED
NTS	NOT TO SCALE
	-O-
OC	ON CENTER
OD	OUTSIDE DIAMETER
OFF	OFFICE
OH	OVERHEAD
OPNG	OPENING
OPP	OPPOSITE
	-P-
PA	PUBLIC ADDRESS
PERIM	PERIMETER
PKG	PACKAGE
PL	PLATE
PLMB	PLUMBING
PLYWD	PLYWOOD
PROJ	PROJECT
PSF	POUNDS PER SQUARE FOOT
PSI	POUNDS PER SQUARE INCH
PVC	POLYVINYL CHLORIDE
	-R-
R	RADIUS
R/A	RETURN AIR
RCP	REFLECTIVE CEILING PLAN
RD	ROOF DRAIN
RECP	RECEPTACLE
REFER	REFERENCE
REINF	REINFORCED
REQ'D	REQUIRED
REV	REVISION
RH	RIGHT HAND
RO	ROUGH OPENING
	-S-
S	SOUTH
S/A	SUPPLY AIR
SCHED	SCHEDULE
SECT	SECTION
SF	SQUARE FOOT
SIM	SIMILAR
SPEC	SPECIFICATION
SQ	SQUARE, AS IN "SQ FT"
STC	SOUND TRANSMISSION COEFFICIENT
STD	STANDARD
STOR	STORAGE
STRUCT	STRUCTURAL
SUPP	SUPPORT
SUSP	SUSPENDED
SYS	SYSTEM
	-T-
TD	TRENCH DRAIN
TECH	TECHNICAL
THRU	THROUGH
TLT	TOILET
TO	TOP OF, AS IN "TO STEEL"
TYP	TYPICAL
	-U-
UL	UNDERWRITERS LABORATORY
UNO	UNLESS NOTED OTHERWISE
UTIL	UTILITY
	-V-
VENT	VENTILATE, VENTILATOR
VERT	VERTICAL
VOL	VOLUME
	-W-
W	WEST, WIDTH
W/	WITH
W/O	WITHOUT
WC	WATER CLOSET
WD	WOOD
WH	WATER HEATER
WT	WEIGHT

GENERAL NOTES

1. ALL WORK SHALL COMPLY WITH ALL APPLICABLE CODES AND STANDARDS AS LISTED OR REFERENCED ON LIFE SAFETY PLAN AND LIFE SAFETY NARRATIVE AND BUILDING CODE ANALYSIS OR AS REQUIRED BY THE AUTHORITY HAVING JURISDICTION.
2. THE CONTRACTOR SHALL INCLUDE ALL WORK REQUIRED TO COMPLY WITH ALL APPLICABLE CODES AND STANDARDS AS LISTED OR REFERENCED ON LIFE SAFETY PLAN AND LIFE SAFETY CRITERIA OR AS REQUIRED BY THE AUTHORITY HAVING JURISDICTION.
3. DIMENSIONS SHALL GOVERN. DETAILS SHALL GOVERN OVER PLANS AND ELEVATIONS. LARGE SCALE DETAILS OR PLANS SHALL GOVERN OVER SMALL SCALE DETAILS OR PLANS. DO NOT SCALE DRAWINGS.
4. THE GENERAL CONTRACTOR SHALL PROVIDE AND INSTALL ALL EXIT SIGNS, EMERGENCY LIGHTING SYSTEMS, ALARM SYSTEMS AND AUTOMATIC SPRINKLER SYSTEMS AS REQUIRED BY APPLICABLE CODES AND STANDARDS OR AS REQUIRED BY THE AUTHORITY HAVING JURISDICTION.
5. ALL FLOORS SHALL BE INSPECTED FOR DAMAGE, WARPING OR OTHER NOTICEABLE DEVIATIONS AND PATCHED AND LEVELED PRIOR TO COVERING WITH FLOOR FINISHES.
6. THE GENERAL CONTRACTOR SHALL BE RESPONSIBLE FOR PROVIDING ALL MANUFACTURER'S RECOMMENDED MAINTENANCE PROCEDURES AND SCHEDULES.
7. ANY MANUFACTURER'S OR BRAND NAME PRODUCTS INDICATED OR SPECIFIED ARE DONE SO TO ESTABLISH A MINIMUM LEVEL OF QUALITY.
8. ALL CONSTRUCTION SHALL MEET OR EXCEED LOCAL INDUSTRY STANDARDS. DETAILS ARE PROVIDED TO INDICATE MINIMUM QUALITY AND TO GIVE STANDARDS OF CONSTRUCTION. IF A CONDITION IS NOT SPECIFICALLY DETAILED, SUBMIT A SIMILAR DETAIL FOR GUIDE AND APPROVAL.
9. THE LETTERS I, O, AND Q ARE NOT USED TO INDICATE DETAILS, SECTIONS OR ELEVATIONS.
10. PROVIDE PRESERVATIVE-TREATED WOOD AT ALL LOCATIONS WHERE WOOD IS IN DIRECT CONTACT WITH CONCRETE.
11. PROVIDE 3/4" FIRE-RETARDANT TREATED PLYWOOD BACKING AT ALL ELECTRICAL, PHONE, AND SECURITY SYSTEM PANELS.
12. PROVIDE FIRE-RESISTANT TREATED WOOD BLOCKING FOR SECURE ANCHORAGE OF ALL SHELVES, RUNNING TRIM, RAILINGS, SUSPENDED ITEMS, DOOR-STOPS, GRAB-BARS, AND OTHER SIMILAR WOODWORK, HARDWARE, SPECIALTIES, ACCESSORIES, FIXTURES, OR EQUIPMENT.
13. PROVIDE CEMENT BOARD SHEATHING AT ALL AREAS WHERE A TILE SURFACE IS TO BE INSTALLED ON METAL STUD WALLS.
14. PROVIDE WATER-RESISTANT GYPSUM BOARD AT ALL WET OR UNCONDITIONED AREAS INCLUDING, BUT NOT LIMITED TO, PARTITIONS BEHIND SINKS. CONTRACTOR TO INSURE THAT FIRE RATING IS MAINTAINED.
15. PAINT, STAIN, OR COAT ALL EXPOSED SURFACES OF CONSTRUCTION UNLESS NOTED OTHERWISE OR IF SURFACES ARE PRE-FINISHED.
16. ALL OPENING DIMENSIONS ARE NOMINAL. THE CONTRACTOR SHALL FIELD MEASURE ALL OPENINGS AND COORDINATE WITH THE APPROPRIATE SUPPLIER FOR ALL DOORS.
17. ALL CONDUITS, PLUMBING, PIPING, DUCTWORK, AND OTHER EQUIPMENT EXPOSED TO VIEW SHALL BE LOCATED PARALLEL OR PERPENDICULAR TO THE STRUCTURAL FRAMING SYSTEM.
18. PROVIDE GALVANIC PROTECTION BETWEEN DISSIMILAR MATERIALS, WHERE REQUIRED.
19. ARCHITECTURAL DETAILS ARE APPLICABLE WHERE INDICATED BY SECTION CUT, BY NOTE, OR BY DETAIL TITLE. INCORPORATE SIMILAR DETAILS AT SIMILAR CONDITIONS UNLESS NOTED OTHERWISE. THE CONTRACTOR MAY REQUEST A CLARIFICATION IF REQUIRED, OTHERWISE THE MORE STRINGENT REQUIREMENTS SHALL CONTROL.
20. PROVIDE FIRE-STOPPING SYSTEMS AT TOP OF AND AT ALL PENETRATIONS THROUGH FIRE-RATED PARTITIONS.
21. SEAL ALL EXTERIOR BUILDING JOINTS AT BOTH THE EXTERIOR AND INTERIOR SURFACES AGAINST MOISTURE AND AIR INFILTRATION.
22. SEAL AROUND ALL DOOR FRAMES, COUNTERTOPS, WALL-MOUNTED FIXTURES AND EQUIPMENT TO ADJACENT WALL SURFACES.
23. THE CONTRACTOR SHALL REVIEW THE DIMENSIONS OF ALL EQUIPMENT IN THE PROJECT REGARDLESS OF THE SOURCE AND COORDINATE ACCESS TO THE SPACE AND VERIFY CLEAR FLOOR SPACE IS PROVIDED AS REQUIRED TO ENSURE EASE OF INSTALLATION.
24. ALL WORK MUST BE OF GOOD QUALITY, FREE FROM DEFECTS, AND IN ACCORDANCE WITH THE REQUIREMENTS OF THE CONTRACT DOCUMENTS.
25. THE CONTRACTOR IS RESPONSIBLE FOR THE COORDINATION OF ALL PENETRATIONS IN THE STRUCTURE FOR THE PROPER INSTALLATION OF THE WORK. REFER TO STRUCTURAL DRAWINGS FOR SECONDARY FRAMING AND OR REINFORCING REQUIRED AT PENETRATIONS IN STEEL, CONCRETE.
26. THE CONTRACTOR SHALL PROVIDE ACCESS DOORS OR PANELS AS REQUIRED FOR SERVICING OF PIPING, DUCTWORK, CABLE TRAYS, FIRE DAMPERS AND SIMILAR APPLICATIONS. ALL PROPOSED ACCESS DOOR LOCATIONS TO BE SUBMITTED FOR APPROVAL PRIOR TO INSTALLATION.
27. PROVIDE ALL HVAC, PLUMBING, GAS OR ELECTRIC SERVICE CONNECTIONS TO CASEWORK, FIXTURES, SIGNAGE, OR EQUIPMENT INDICATED (WHETHER UNITS ARE INSTALLED BY CONTRACTOR OR BY OTHERS).
28. BRACE PARTITIONS, SUSPENDED CEILINGS, SOFFITS, SUSPENDED ITEMS, ETC. ONLY TO STRUCTURAL ELEMENTS ABOVE. DO NOT ANCHOR TO ROOF DECK, PLUMBING / SPRINKLER PIPES, DUCTWORK, ELECTRICAL CONDUIT OR SIMILAR ELEMENTS.
29. EXTEND ALL FLOORING AND WALL-BASE COMPLETELY INTO RECESSES, UNDER OPEN COUNTERTOPS, AND BEHIND ALL EQUIPMENT.
30. ALL MATERIALS USED FOR CONSTRUCTION SHALL BE NEW AND UNDAMAGED. THE CONTRACTOR SHALL SUBMIT SHOP DRAWINGS FOR ALL WORK SHOWN.
31. THE CONTRACTOR SHALL BECOME FULLY ACQUAINTED WITH CONDITIONS RELATED TO THE WORK. ANY DISCREPANCIES BETWEEN THE DRAWINGS AND THE ACTUAL CONDITIONS SHALL BE REPORTED TO THE DESIGN PROFESSIONALS FOR RESOLUTION PRIOR TO PROCEEDING WITH THE WORK.
32. DRAWINGS CONTAINED IN THIS SET SHALL NOT BE REPRODUCED FOR SHOP DRAWINGS. COPIES OF THESE DRAWINGS SUBMITTED AS SHOP DRAWINGS WILL BE REJECTED AND RETURNED TO THE CONTRACTOR.
33. EACH INSTALLER MUST EXAMINE SUBSTRATE AND/OR CONDITIONS UNDER WHICH THE WORK WILL BE INSTALLED AND REPORT TO THE CONTRACTOR IN WRITING ANY CONDITIONS DETRIMENTAL TO THE PROPER AND TIMELY EXECUTION OF THE INSTALLERS WORK. DO NOT PROCEED UNTIL UNSATISFACTORY CONDITIONS ARE CORRECTED. INSTALLATION SHALL CONSTITUTE ACCEPTANCE OF THE SUBSTRATE AND/OR CONDITIONS.
34. "TYPICAL" (TYP) AS USED IN THESE DOCUMENTS SHALL MEAN THAT THE CONDITIONS OR DIMENSION IS THE SAME OR REPRESENTATIVE FOR SIMILAR CONDITIONS THROUGHOUT.
35. CONTROL JOINTS (CJ) SHALL BE INSTALLED AT ALL PARTITIONS. CJ AT GYPSUM PARTITIONS SHALL BE MAXIMUM 30'-0" O.C., UNLESS OTHERWISE NOTED ON DRAWINGS. REFER TO ELEVATION DRAWINGS FOR EXTERIOR CONTROL JOINT LOCATIONS. REVIEW CJ LOCATIONS WITH ARCHITECT PRIOR TO INSTALLATION.
36. NON-BEARING PARTITIONS SHALL BE ISOLATED FROM THE BUILDING STRUCTURE TO PREVENT TRANSFER OF BUILDING LOADS FROM THE STRUCTURE TO THE PARTITIONS.
37. PRIOR TO BEGINNING ANY WORK, NOTIFY OWNER OF ANY EXISTING MATERIALS OBSERVED TO POSSIBLY CONTAIN ASBESTOS.
38. PATCH HOLES LEFT BY REMOVAL USING MATERIALS SPECIFIED FOR NEW CONSTRUCTION.
39. REMOVE EXISTING WORK AS INDICATED AND AS REQUIRED TO ACCOMPLISH NEW WORK.
40. WHERE EXISTING FINISHED SURFACES ARE CUT SO THAT A SMOOTH TRANSITION WITH NEW WORK IS NOT POSSIBLE, TERMINATE EXISTING SURFACE ALONG A STRAIGHT LINE AT A NATURAL LINE OF DIVISION AND MAKE RECOMMENDATION TO CONTRACTING OFFICER.

41 PROTECT EXISTING WORK TO REMAIN. PERFORM CUTTING TO ACCOMPLISH REMOVALS NEATLY AND AS SPECIFIED FOR CUTTING NEW WORK. REPAIR ADJACENT CONSTRUCTION AND FINISH DAMAGED DURING REMOVAL WORK. PATCH AS SPECIFIED FOR PATCHING NEW WORK.

42. THE CONTRACTOR IS RESPONSIBLE FOR VERIFYING THE EXTENT, NATURE, AND SCOPE OF WORK DESCRIBED IN THE CONTRACT DOCUMENTS AND COORDINATING WITH THE OWNER OR HIS/HER REPRESENTATIVE THE INTERFACING OF THE EXISTING BUILDING AND THE WORK SHOWN AND DESCRIBED IN THESE CONTRACT DOCUMENTS.
43. ALL "EXISTING" INFORMATION ON THE CONTRACT DOCUMENTS HAS BEEN OBTAINED FROM A PREVIOUS SET OF DRAWINGS, OR FROM FIELD INVESTIGATION AND SUCH "EXISTING" INFORMATION SHALL BE FIELD VERIFIED BY ALL CONTRACTORS.
44. THE CONTRACTOR SHALL COORDINATE WITH THE CONTRACTING OFFICER FOR DESIGNATED CONSTRUCTION STAGING LOCATIONS, STORAGE AREAS, AND CONSTRUCTION SEQUENCING.
45. THE PREMISES WILL BE OCCUPIED AT ALL TIMES DURING THE CONSTRUCTION SCHEDULE. THE CONTRACTOR SHALL COORDINATE WITH THE OWNER REGARDING ALL INTERRUPTIONS OF UTILITIES, TEMPORARY EXITS, DUST PARTITIONS, DELIVERIES, AND ALL OTHER JOB REQUIREMENTS.
46. ALL EXTERIOR WALL, ROOF, EAVE TRIM, CONDUCTOR HEAD & DOWNSPOUT, AND WALL MOUNT ELEMENTS SHALL MATCH EXISTING. CONTRACTOR SHALL PROVIDE SAMPLE MATERIAL TO CONTRACTING OFFICER BEFORE INSTALLATION.

US ARMY CORPS OF ENGINEERS
OMAHA DISTRICT

SYM.	DATE	DESCRIPTION	APPR.

SYM.	DATE	DESCRIPTION	APPR.

U.S. ARMY ENGINEER DISTRICT
CORPS OF ENGINEERS
OMAHA, NEBRASKA

BURNS & McDONNELL
8201 NORMAN CENTER DR. #300
BLOOMINGTON, MN 55437
952-656-6003

DESIGNED BY: J.WIEDERHOLT		DATE: APRIL 2016
DWN BY: J.PICKA	CKD BY: -	SOLICITATION NO.: W9128F-16-B-0007
SUBMITTED BY: -		CONTRACT NO.: -
FILE NAME: MIA8AG000		FILE NUMBER: AF212-220
SIZE: 34X22	PLOT SCALE: AS INDICATED	PLOT DATE: 4/22/16

FY15 P-341 CONSTRUCT ADDITION B1134
MINOT AFB, NORTH DAKOTA
PN: QJVF143101

ARCHITECTURAL LEGEND, ABBREVIATIONS AND GENERAL NOTES

SHEET IDENTIFICATION NUMBER
AG000

4/25/2016 8:41:25 AM
COPYRIGHT © 2016 BURNS & McDONNELL ENGINEERING COMPANY, INC.

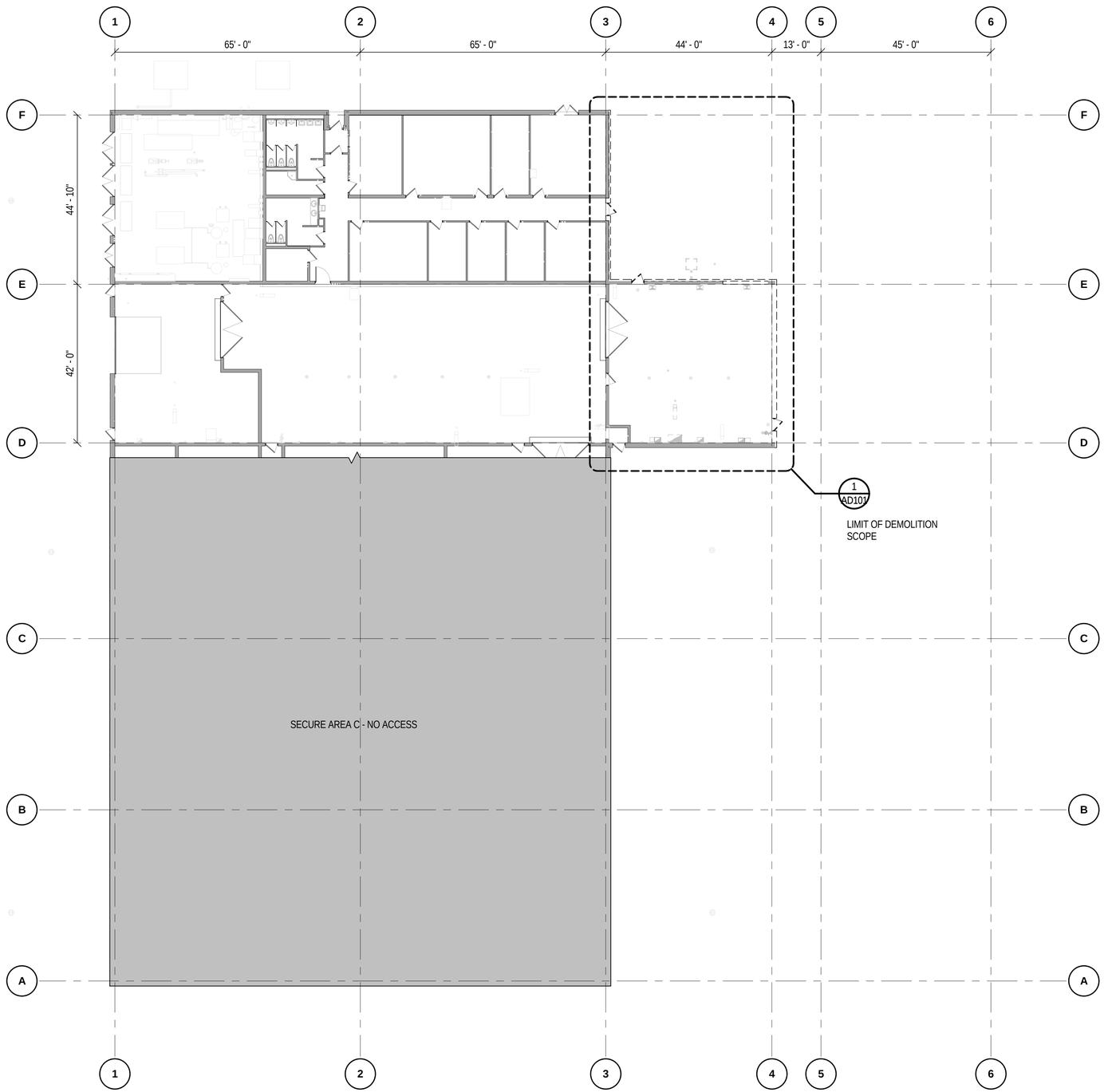

DEMOLITION PLAN - OVERALL

0 8' 16' 32'
SCALE IN FEET

N

GENERAL FLOOR PLAN DEMOLITION NOTES:

1. EXISTING CONDITIONS SHOWN ON DRAWINGS ARE FOR INFORMATIONAL PURPOSES ONLY AND DO NOT SHOW ALL CONDITIONS THAT MAY AFFECT THE WORK OF THIS CONTRACT. CONTRACTOR SHALL FIELD VERIFY ALL EXISTING CONDITIONS. REFER TO ALL ARCHITECTURAL, PLUMBING, MECHANICAL, ELECTRICAL, AND STRUCTURAL DRAWINGS FOR ADDITIONAL DEMOLITION INFORMATION AND COORDINATION.
2. ALL DEMOLITION WORK SHALL COMPLY WITH APPLICABLE BUILDING CODE AND ALL APPLICABLE LOCAL, STATE, AND FEDERAL LAWS, ORDINANCES, AND REGULATIONS. SEE LIFE SAFETY NARRATIVE AND BUILDING CODE ANALYSIS SHEET FOR APPLICABLE BUILDING CODE.
3. PROTECT ALL ADJACENT AREAS FROM THE DEMOLITION. REPAIR OR REPLACE, AT NO COST TO THE GOVERMENT, ALL AREAS OR ITEMS DAMAGED DURING THE DEMOLITION.
4. WHEN UNANTICIPATED MECHANICAL, ELECTRICAL, OR STRUCTURAL ELEMENTS THAT CONFLICT WITH THE INTENDED FUNCTION OR DESIGN ARE ENCOUNTERED, DETERMINE THE NATURE AND EXTENT OF THE CONFLICT AND NOTIFY THE CONTRACTING OFFICER IMMEDIATELY FOR RESOLUTION.
5. IF MATERIALS SUSPECTED OF CONTAINING HAZARDOUS MATERIALS ARE ENCOUNTERED, DO NOT DISTURB; IMMEDIATELY NOTIFY SUPERINTENDENT AND CONTRACTING OFFICER.
6. THIS DEMOLITION PLAN OUTLINES THE SCOPE OF THE WORK INVOLVED FOR THE DEMOLITION PHASE OF THIS PROJECT. CONTRACTOR SHALL ALSO REFER TO THE DRAWINGS FOR THE CONSTRUCTION OF THE NEW ADDITION FOR ADDITIONAL INFORMATION.
7. ALL DEMOLITION WORK SHALL BE COORDINATED WITH THE OTHER WORK OF THIS PROJECT AS OUTLINED IN THE DOCUMENTS. ANY DISCREPANCIES NOTED WHICH WILL IMPACT THE SCHEDULE FOR CONSTRUCTION OR HAVE AN EFFECT ON THE CONTINUED OPERATION OF BUSINESS AT THIS FACILITY SHALL BE BROUGHT TO THE IMMEDIATE ATTENTION OF THE CONTRACTING OFFICER FOR RESOLUTION.
8. AFTER DEMOLITION, CONCRETE SURFACE SHALL BE SMOOTH TO MATCH EXISTING CONCRETE SURFACE AND FLUSH WITH EXISTING SURFACE.

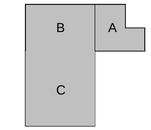

KEYPLAN

US ARMY CORPS OF ENGINEERS
OMAHA DISTRICT

SYM.	DATE	DESCRIPTION	SYM.	DATE	DESCRIPTION	APPR.

U.S. ARMY ENGINEER DISTRICT
CORPS OF ENGINEERS
OMAHA, NEBRASKA

BURNS & McDONNELL
8201 NORMAN CENTER DR. #300
BLOOMINGTON, MN 55437
952-656-6003

DESIGNED BY: J.WIEDERHOLT	DATE: APRIL 2016
DWN BY: J.PICKA	CKD BY: -	SOLICITATION NO.: W912BF-16-B-0007
SUBMITTED BY: -	CONTRACT NO.: -
FILE NAME: MIA8AD011	FILE NUMBER: AF212-220
SIZE: 34X22	PLOT SCALE: AS INDICATED	PLOT DATE: 4/22/16

FY15 P-341 CONSTRUCT ADDITION B1134
MINOT AFB, NORTH DAKOTA
PN: QJVF143101

DEMOLITION PLAN - OVERALL

SHEET IDENTIFICATION NUMBER
AD011

4/25/2016 8:41:22 AM
COPYRIGHT © 2016 BURNS & McDONNELL ENGINEERING COMPANY, INC.

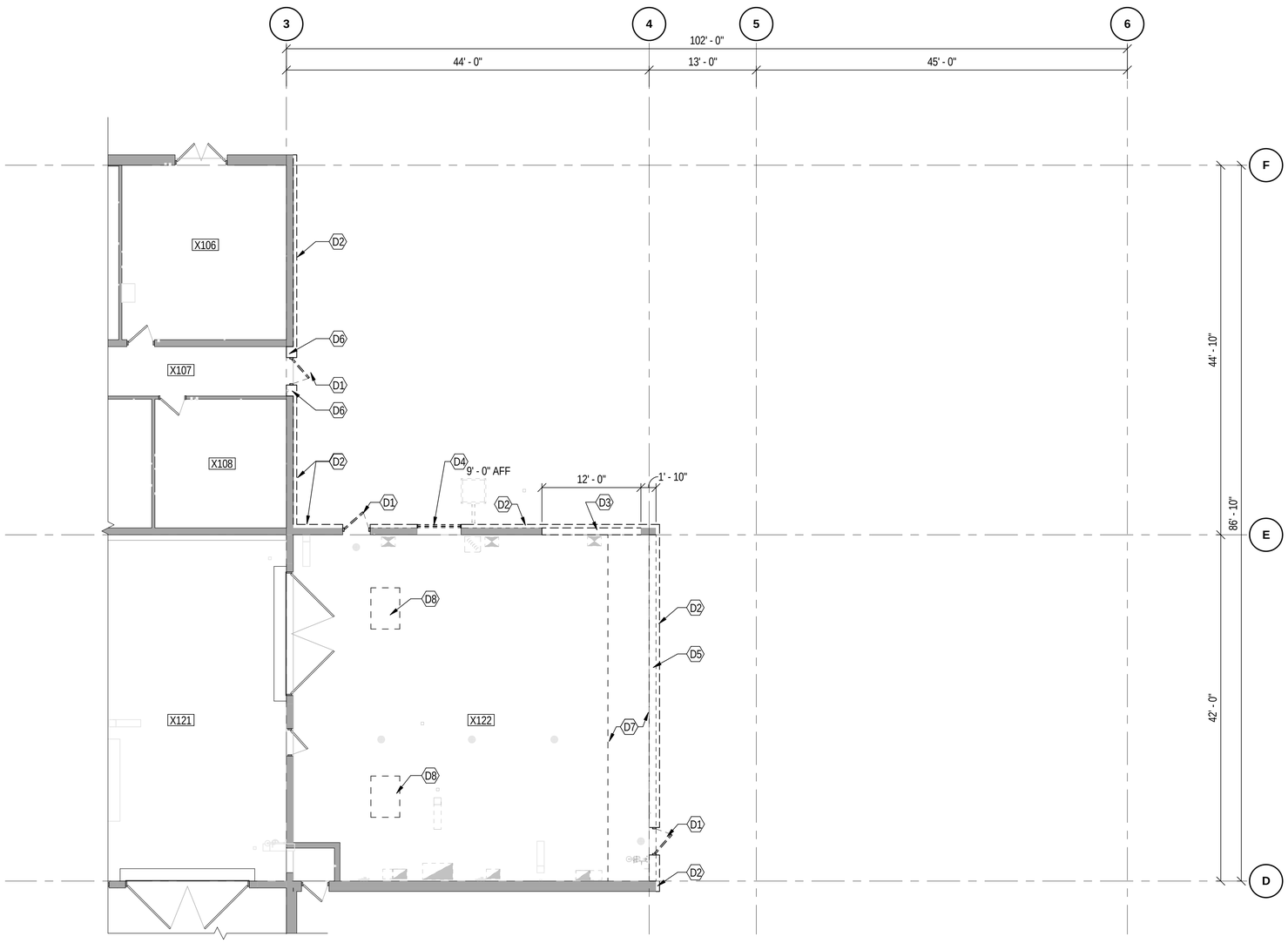

DEMOLITION PLAN - AREA A

0 4' 8' 16'
SCALE IN FEET

N

GENERAL FLOOR PLAN DEMOLITION NOTES:

1. EXISTING CONDITIONS SHOWN ON DRAWINGS ARE FOR INFORMATIONAL PURPOSES ONLY AND DO NOT SHOW ALL CONDITIONS THAT MAY AFFECT THE WORK OF THIS CONTRACT. CONTRACTOR SHALL FIELD VERIFY ALL EXISTING CONDITIONS. REFER TO ALL ARCHITECTURAL, PLUMBING, MECHANICAL, ELECTRICAL, AND STRUCTURAL DRAWINGS FOR ADDITIONAL DEMOLITION INFORMATION AND COORDINATION.
2. ALL DEMOLITION WORK SHALL COMPLY WITH APPLICABLE BUILDING CODE AND ALL APPLICABLE LOCAL, STATE, AND FEDERAL LAWS, ORDINANCES, AND REGULATIONS. SEE LIFE SAFETY NARRATIVE AND BUILDING CODE ANALYSIS SHEET FOR APPLICABLE BUILDING CODE.
3. PROTECT ALL ADJACENT AREAS FROM THE DEMOLITION. REPAIR OR REPLACE, AT NO COST TO THE GOVERMENT, ALL AREAS OR ITEMS DAMAGED DURING THE DEMOLITION.
4. WHEN UNANTICIPATED MECHANICAL, ELECTRICAL, OR STRUCTURAL ELEMENTS THAT CONFLICT WITH THE INTENDED FUNCTION OR DESIGN ARE ENCOUNTERED, DETERMINE THE NATURE AND EXTENT OF THE CONFLICT AND NOTIFY THE CONTRACTING OFFICER IMMEDIATELY FOR RESOLUTION.
5. IF MATERIALS SUSPECTED OF CONTAINING HAZARDOUS MATERIALS ARE ENCOUNTERED, DO NOT DISTURB; IMMEDIATELY NOTIFY SUPERINTENDENT AND CONTRACTING OFFICER.
6. THIS DEMOLITION PLAN OUTLINES THE SCOPE OF THE WORK INVOLVED FOR THE DEMOLITION PHASE OF THIS PROJECT. CONTRACTOR SHALL ALSO REFER TO THE DRAWINGS FOR THE CONSTRUCTION OF THE NEW ADDITION FOR ADDITIONAL INFORMATION.
7. ALL DEMOLITION WORK SHALL BE COORDINATED WITH THE OTHER WORK OF THIS PROJECT AS OUTLINED IN THE DOCUMENTS. ANY DISCREPANCIES NOTED WHICH WILL IMPACT THE SCHEDULE FOR CONSTRUCTION OR HAVE AN EFFECT ON THE CONTINUED OPERATION OF BUSINESS AT THIS FACILITY SHALL BE BROUGHT TO THE IMMEDIATE ATTENTION OF THE CONTRACTING OFFICER FOR RESOLUTION.
8. AFTER DEMOLITION, CONCRETE SURFACE SHALL BE SMOOTH TO MATCH EXISTING CONCRETE SURFACE AND FLUSH WITH EXISTING SURFACE.

KEYNOTES	
D1	REMOVE DOOR AND FRAME
D2	REMOVE METAL SIDING, INSULATION AND METAL FRAMING FROM THE EXTERIOR SIDE OF THE EXISTING CAST-IN-PLACE CONCRETE WALL
D3	REMOVE PORTION OF WALL TO ALLOW FOR THE INSTALL OF NEW DOOR
D4	REMOVE LOUVER
D5	REMOVE PORTION OF WALL IN ITS ENTIRETY
D6	REMOVE PORTION OF WALL UP TO BOTTOM SIDE OF CONCRETE DECK
D7	REMOVE PORTION OF ROOFING AND ROOF DECK BACK TO NEAREST EXIST STRUCTURAL FRAMING MEMBER
D8	REMOVE PORTION OF ROOF TO ALLOW FOR NEW MECHANICAL PENETRATION

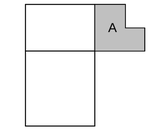

KEYPLAN

US ARMY CORPS OF ENGINEERS
OMAHA DISTRICT

SYM.	DATE	DESCRIPTION	SYM.	DATE	DESCRIPTION	APPR.

DESIGNED BY: J.WIEDERHOLT
DWN BY: J.PICKA
CKD BY: -
SUBMITTED BY: -
DATE: APRIL 2016
SOLICITATION NO.: W912BF-16-B-0007
CONTRACT NO.: -
FILE NAME: MIA8AD101
FILE NUMBER: AF212-220
SIZE: 34X22
PLOT SCALE: AS INDICATED
PLOT DATE: 4/2/2016

U.S. ARMY ENGINEER DISTRICT
CORPS OF ENGINEERS
OMAHA, NEBRASKA

BURNS & McDONNELL
8201 NORMAN CENTER DR. #300
BLOOMINGTON, MN 55437
952-656-6003

FY15 P-341 CONSTRUCT ADDITION B1134
MINOT AFB, NORTH DAKOTA
PN: QJVF-143101

DEMOLITION PLAN - AREA A

SHEET IDENTIFICATION NUMBER
AD101

4/25/2016 8:41:24 AM
COPYRIGHT © 2016 BURNS & McDONNELL ENGINEERING COMPANY, INC.

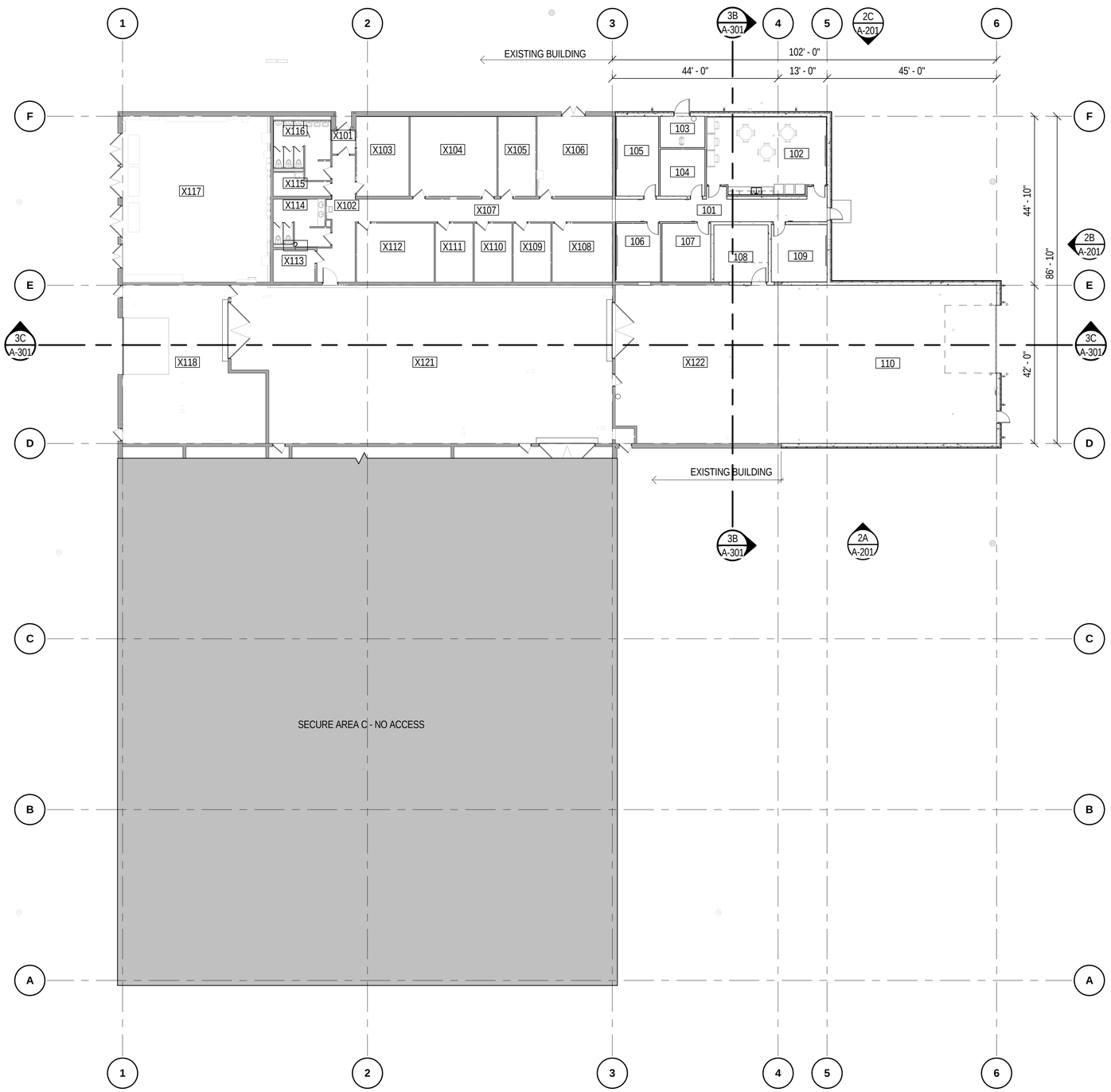

OVERALL FLOOR PLAN

0 8' 16' 32'
SCALE IN FEET

N

GENERAL FLOOR PLAN NOTES:

1. FOR ARCHITECTURAL GENERAL NOTES, MATERIAL LEGEND, AND ABBREVIATIONS REFER TO SHEET AG000.
2. REFERENCE LIFE SAFETY DRAWINGS LS101 FOR FIRE RATED WALLLOCATIONS. ALL FIRE RATED WALLS AND SMOKE PARTITIONS ARE CONTINUOUS ACROSS ALL DOOR OPENINGS.
3. FOR PARTITION TYPES CONSTRUCTION AND DESCRIPTION REFER TO PARTITION TYPES SHEET A-501.
4. THE CONTRACTOR SHALL VERIFY ALL DIMENSIONS, ELEVATIONS AND SITE CONDITIONS BEFORE BEGINNING WORK AND FABRICATION.
5. DOOR FRAMES PLACED IN METAL STUD WALLS SHALL BE LOCATED 4" FROM NEAREST INTERSECTING WALL, TYPICAL - UNLESS NOTED OTHERWISE.
6. REFER TO FINISH SCHEDULE AND FINISH PLANS FOR ADDITIONAL FINISH INFORMATION. ALL FLOOR FINISHES TO BE CONTINUOUS UNDER MILLWORK AND EQUIPMENT UNLESS NOTED OTHERWISE.
7. PROVIDE 18GA METAL PLATE OR FIRE TREATED WOOD BLOCKING IN WALL FOR EQUIPMENT, AND COUNTERTOP MOUNTING SUPPORTS.
8. ALL DIMENSIONS ARE FROM: COLUMN GRID LINE AND CENTERLINE OF METAL STUD WALL UNLESS NOTED OTHERWISE.
9. THE FINISHED FLOOR ELEVATION IS 100'-0" UNLESS NOTED OTHERWISE.

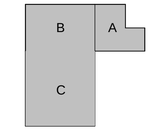

KEYPLAN

AREA SCHEDULE

NEW CONSTRUCTION	101	CORR	373 SF
	102	BREAK RM	626 SF
	103	COMM	99 SF
	104	LOW BAY NCOIC	148 SF
	105	OFFICE 1	239 SF
	106	OFFICE 2	184 SF
	107	HIGH BAY NCOIC	202 SF
	108	VACE VAULT	219 SF
	109	VACE OFFICE	225 SF
	110	SINGLE MISSILE MAINTENANCE-C ADDITION	2401 SF
EXISTING	X101	VEST	37 SF
	X102	CORR	249 SF
	X103	ADMIN	292 SF
	X104	READY RM	483 SF
	X105	ANALYSIS	209 SF
	X106	MATERIAL CONTROL AND STORAGE	422 SF
	X107	CORR	415 SF
	X108	MISSILE CONTROL	249 SF
	X109	MAINT B	155 SF
	X110	MAINT A	155 SF
	X111	OFFICE	155 SF
	X112	T.O. LIBRARY	321 SF
	X113	ARMS RM	94 SF
	X114	WOMENS	172 SF
	X115	JANITOR	77 SF
	X116	MENS	205 SF
	X117	MECH	1723 SF
	X118	SINGLE MISSILE MAINTENANCE-A	1363 SF
	X121	SINGLE MISSILE MAINTENANCE-B	4076 SF
	X122	SINGLE MISSILE MAINTENANCE-C	1822 SF
	X123	MISSILE TEST	2107 SF
	X124	MISSILE TEST AND CHECKOUT	2115 SF
	X125	CORR	268 SF
	X126	EQUIPMENT TEST AND REPAIR	346 SF
	X128	HYDRAULIC RM	261 SF
	X129	SRAM MISSILE TEST	1254 SF
	X130	MISSILE LOADING AND UNLOADING	11692 SF
Grand total: 37			35434 SF
FINISH FLOOR			37900 SF

US ARMY CORPS OF ENGINEERS
OMAHA DISTRICT

SYM.	DATE	DESCRIPTION	SYM.	DATE	DESCRIPTION	APPR.

DESIGNED BY: J.WIEDERHOLT
DWN BY: J.PICKA
CKD BY: -
SUBMITTED BY: -
FILE NAME: MI49A-011
SIZE: 34X22
PLOT SCALE: AS INDICATED
DATE: APRIL 2016
SOLICITATION NO.: W912BF-16-B-0007
CONTRACT NO.: -
FILE NUMBER: AF212-220
PLOT DATE: 4/22/16

U.S. ARMY ENGINEER DISTRICT
CORPS OF ENGINEERS
OMAHA, NEBRASKA

BURNS & McDONNELL
8201 NORMAN CENTER DR. #300
BLOOMINGTON, MN 55437
952-656-6003

FY15 P-341 CONSTRUCT ADDITION B1134
MINOT AFB, NORTH DAKOTA
PN: QJVF143101

FLOOR PLAN - OVERALL

SHEET IDENTIFICATION NUMBER
A-011

4/25/2016 8:40:51 AM
COPYRIGHT © 2016 BURNS & McDONNELL ENGINEERING COMPANY, INC.

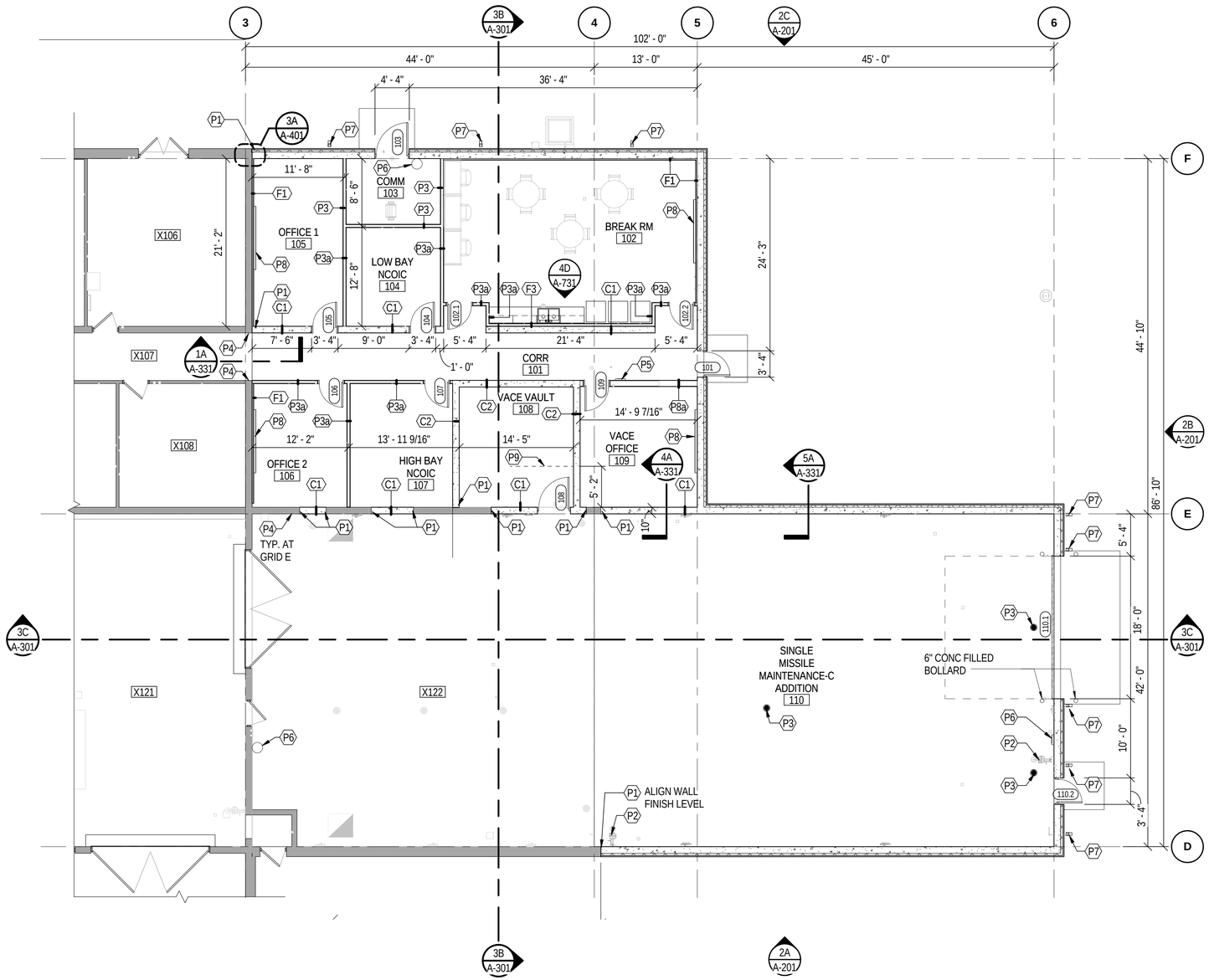

FLOOR PLAN - AREA A

0 4' 8' 16'
SCALE IN FEET

N

GENERAL FLOOR PLAN NOTES:

1. FOR ARCHITECTURAL GENERAL NOTES, MATERIAL LEGEND, AND ABBREVIATIONS REFER TO SHEET AG000.
2. REFERENCE LIFE SAFETY DRAWINGS LS101 FOR FIRE RATED WALLLOCATIONS. ALL FIRE RATED WALLS AND SMOKE PARTITIONS ARE CONTINUOUS ACROSS ALL DOOR OPENINGS.
3. FOR PARTITION TYPES CONSTRUCTION AND DESCRIPTION REFER TO PARTITION TYPES SHEET A-501.
4. THE CONTRACTOR SHALL VERIFY ALL DIMENSIONS, ELEVATIONS AND SITE CONDITIONS BEFORE BEGINNING WORK AND FABRICATION.
5. DOOR FRAMES PLACED IN METAL STUD WALLS SHALL BE LOCATED 4" FROM NEAREST INTERSECTING WALL, TYPICAL - UNLESS NOTED OTHERWISE.
6. REFER TO FINISH SCHEDULE AND FINISH PLANS FOR ADDITIONAL FINISH INFORMATION. ALL FLOOR FINISHES TO BE CONTINUOUS UNDER MILLWORK AND EQUIPMENT UNLESS NOTED OTHERWISE.
7. PROVIDE 18GA METAL PLATE OR FIRE TREATED WOOD BLOCKING IN WALL FOR EQUIPMENT, AND COUNTERTOP MOUNTING SUPPORTS.
8. ALL DIMENSIONS ARE FROM: COLUMN GRID LINE AND CENTERLINE OF METAL STUD WALL UNLESS NOTED OTHERWISE.
9. THE FINISHED FLOOR ELEVATION IS 100'-0" UNLESS NOTED OTHERWISE.

KEYPLAN

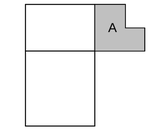

KEYNOTES

P1 DOWEL IN NEW CAST-IN PLACE CONCRETE WALL INTO EXISTING CAST-IN PLACE CONCRETE WALL

P2 EYEWASH STATION, RE: MECHANICAL

P3 FLOOR DRAIN, RE: MECHANICAL

P4 GRIND SURFACE SMOOTH AND PATCH/SKIM COAT EXIST CONCRETE WALL AS REQUIRED

P5 RECESSED FIRE EXTINGUISHER CABINET

P6 FIRE EXTINGUISHER BRACKET - SURFACE MOUNTED

P7 PREFINISHED METAL COLLECTION AND DOWNSPOUT AND SPLASH BLOCK

P8 4'-0" X 8'-0" MARKER BOARD

P9 HEAVY DUTY INDUSTRIAL CURTAIN - 8'-0" TALL AND LONG
BASIS OF DESIGN: STEEL GUARD - INDUSTRIAL SAFETY CURTAIN WALLS (1-800-347-8368) OR APPROVED EQUAL.
CURTAIN FABRIC: 16 OZ STEEL SCRIM LAMINATED VINYLE G2, GRAY
TRACK: SUSPENDED MOUNT TRACK SYSTEM

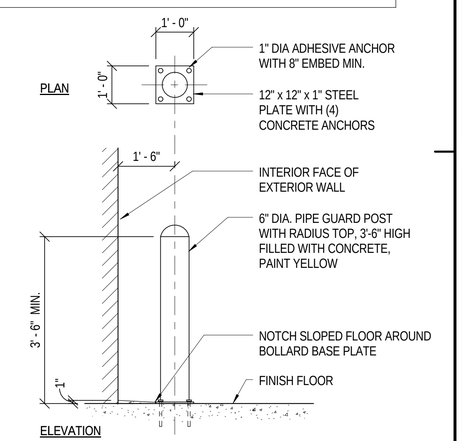

DETAIL 5A A-101

INTERIOR BOLLARD DETAIL

US ARMY CORPS OF ENGINEERS
OMAHA DISTRICT

SYM.	DATE	DESCRIPTION	SYM.	DATE	DESCRIPTION	APPR.

DESIGNED BY: J WEDERFORT
DWN BY: J PICKA
CKD BY:
SUBMITTED BY:
DATE: APRIL 2016
SOLICITATION NO.: W912JF-16-B-0007
CONTRACT NO.: -
FILE NUMBER: AF212-220
FILE NAME: MIA8A-101
SIZE: 34X22
PLOT SCALE: AS INDICATED
PLOT DATE: 4/22/16

U.S. ARMY ENGINEER DISTRICT
CORPS OF ENGINEERS
OMAHA, NEBRASKA

BURNS & McDONNELL
8201 NORMAN CENTER DR. #300
BLOOMINGTON, MN 55437
952-656-6003

FY15 P-341 CONSTRUCT ADDITION B1134
MINOT AFB, NORTH DAKOTA
PN: QJVF143101

FLOOR PLAN - AREA A

SHEET IDENTIFICATION NUMBER
A-101

4/25/2016 8:40:54 AM
COPYRIGHT © 2016 BURNS & McDONNELL ENGINEERING COMPANY, INC.

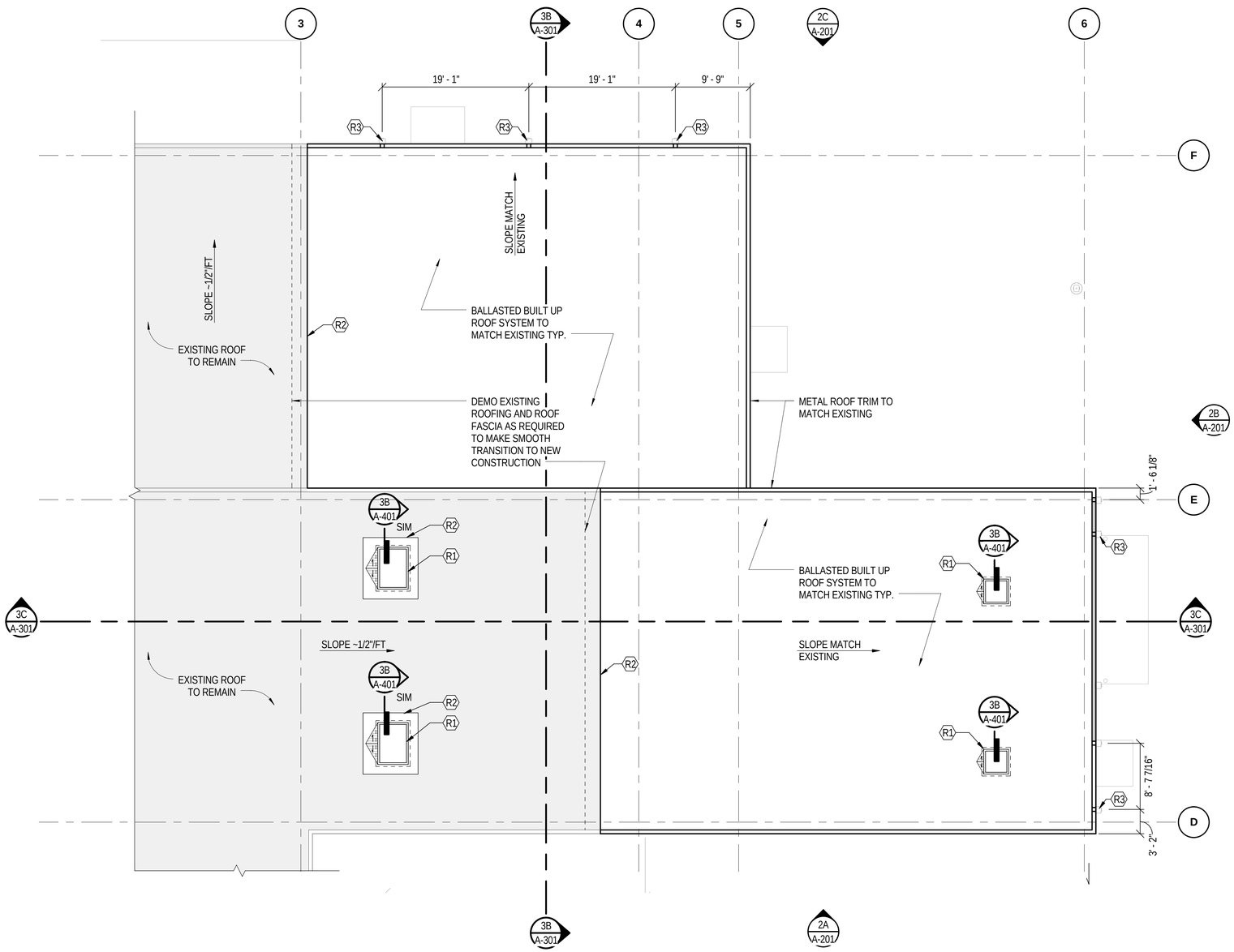

ROOF PLAN

0 4' 8' 16'
SCALE IN FEET

N

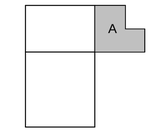

KEYPLAN

GENERAL ROOF PLAN NOTES:

1. FOR ARCHITECTURAL GENERAL NOTES, MATERIAL LEGEND, AND ABBREVIATIONS REFER TO SHEET AG000.
2. NEW ROOF SYSTEM, METAL ROOF FASCIA TRIM, CONDUCTOR HEAD, AND DOWNSPOUT SHALL MATCH EXISTING. CONTRACTOR SHALL INVESTIGATE EXISTING CONDITION BEFORE DEMOLITION FOR NEW CONSTRUCTION.
3. BALLAST COLOR AND SIZE TO MATCH EXISTING.
4. PROVIDE DRAINAGE CRICKET IF NECESSARY
5. TOP OF NEW METAL DECK ELEVATION SHALL MATCH EXISTING TOP OF CONCRETE ELEVATION
6. NEW ROOF ELEVATION AND SLOPE SHALL MATCH EXISTING
7. PROVIDE SLOTTED GRAVEL STOP AT CONDUCTOR
8. ALL ROOF PENETRATION SHALL BE COMPLETELY SEALED AND WATER TIGHT
9. PROVIDE A MININUM R-VALUE OF R-30 FOR ROOF SYSTEM. INSULATION THICKNESS ABOVE DECK SHALL MATCH EXISTING ROOF INSULATION THICKNESS. PROVIDE MINERAL WOOL INSULATION BOARD UNDER ROOF DECK TO ACHIEVE A MININUM R-VALUE OF R-30 FOR ROOF SYSTEM.
10. DEMO EXISTING ROOF INSULATION MINIMUM 2'-0" SO THAT EXISTING AND NEW ROOF INSULATION BOARD CAN BE STAGGERED
11. ALL MEMBRANE FLASHINGS SHALL BE PREMIUM SBS FLASHINGS UP THE SIDES, OVER THE TOP AND DOWN THE FRONT A MINIMUM 1". ALL FLASHINGS SHALL BE 100% WATERPROOF. ANY FLASHING GOING UP A TALLER INSIDE WALL SHALL BE A MINIMUM 1'-6" ABOVE NEW ROOF MEMBRANE AND 100% WATERPROOF.
12. ALL METAL FASCIA'S, ROOF CAPS, SCUPPERS AND ANY DOWNSPOUTS SHALL BE DARK BRONZE AND MATCH THE EXISTING LAYOUT/DESIGN. ALL METAL TRIM SHALL COMPLY WITH ANSI/SPRI ES-1 WIND RATING.
13. ALL NEW ROOFING/INSULATION SYSTEMS SHALL BE INSTALLED AS PER FM 1-90 WITH A MINIMUM 72 MPH WIND WARRANTY (MINIMUM 20 YEARS). WIND WARRANTY RATING SHALL BE STATED ON THE FINAL MANUFACTURER'S ROOFING WARRANTY PAPERS. ALSO INCLUDE AN 8 1/2" X 11" AS-BUILT PLAN WITH AN AS-BUILT FORM THAT DESCRIBES THE COMPONENTS OF THE ENTIRE ROOFING/INSULATION SYSTEM.

ROOF LEGEND	
←	SLOPED STRUCTURE - TO MATCH EXISTING, 1/2":FOOT SLOPE

KEYNOTES	
R1	MECHANICAL EQUIPMENT, MECHANICAL CURB AND ROOF DRAINAGE CRICKET FORMED WITH RIGID INSULATION
R2	TIE NEW BUILT UP ROOF SYSTEM INTO EXISTING BUILT UP ROOF SYSTEM PER NRCA ROOFING MANUAL
R3	PREFINISHED METAL COLLECTION HEAD AND DOWNSPOUT TO MATCH EXISTING

US ARMY CORPS OF ENGINEERS
OMAHA DISTRICT

SYM.	DATE	DESCRIPTION	SYM.	DATE	DESCRIPTION	APPR.

U.S. ARMY ENGINEER DISTRICT
CORPS OF ENGINEERS
OMAHA, NEBRASKA

BURNS & McDONNELL
8201 NORMAN CENTER DR. #300
BLOOMINGTON, MN 55437
952-656-6003

DESIGNED BY: D.WIEDERHOLT
DWN BY: J.PICKA
CKD BY: -
SUBMITTED BY: -
DATE: APRIL 2016
SOLICITATION NO.: W912BF-16-B-0007
CONTRACT NO.: -
FILE NAME: MIA8A-103
FILE NUMBER: AF212-220
SIZE: 34X22
PLOT SCALE: AS INDICATED
PLOT DATE: 4/22/16

FY15 P-341 CONSTRUCT ADDITION B1134
MINOT AFB, NORTH DAKOTA
PN: QUVF143101

ROOF PLAN - AREA A

SHEET IDENTIFICATION NUMBER
A-103

4/25/2016 8:40:55 AM
COPYRIGHT © 2016 BURNS & McDONNELL ENGINEERING COMPANY, INC.

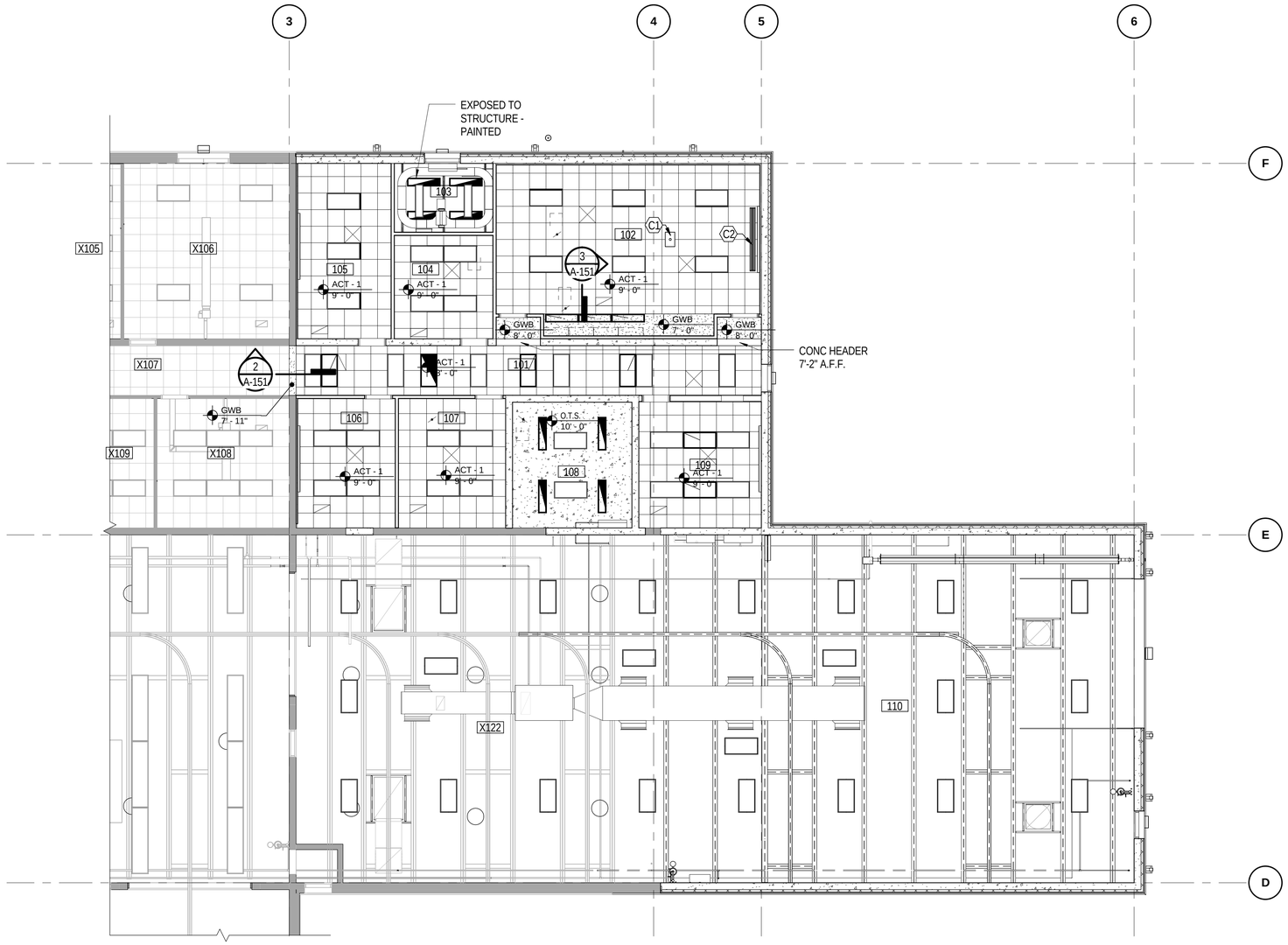

REFLECTED CEILING PLAN - AREA A

0 4' 8' 16'
SCALE IN FEET

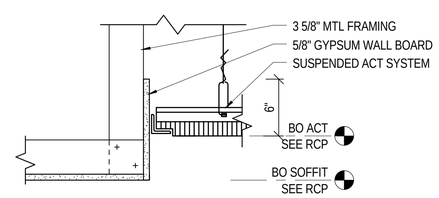

GWB SOFFIT 3 A-151

0 1/2' 1' 1 1/2'
SCALE IN FEET

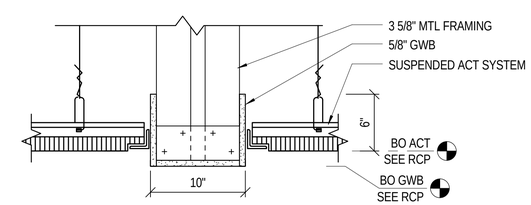

GYPSUM BD SOFFIT 2 A-151

0 1/2' 1' 1 1/2'
SCALE IN FEET

GENERAL REFLECTED CEILING PLAN NOTES:

1. FOR ARCHITECTURAL GENERAL NOTES, MATERIAL LEGEND, AND ABBREVIATIONS REFER TO SHEET AG000.
2. CEILING HEIGHTS ARE SHOWN TO HEIGHT ABOVE FINISH FLOOR.
3. ALL CEILING GRIDS TO BE CENTERED IN ROOMS UNLESS NOTED OTHERWISE.
4. ALL LIGHTS, SPEAKERS, SPRINKLERS, SIGNAGE, STROBES AND OTHER HARDWARE INSTALLED IN TILED CEILING SYSTEMS TO BE CENTERED IN TILES IN BOTH DIRECTIONS UNLESS NOTED OTHERWISE.
5. ALIGN ALL CEILING MOUNTED DEVICES.
6. REFERENCE ROOM FINISH SCHEDULE FOR ADDITIONAL CEILING FINISH INFORMATION.
7. CEILING MOUNTED EXIT SIGNS TO BE CENTERED WITHIN DOOR FRAME OR OPENING. MOUNT 4" OFF FACE OF WALL.
8. ALL SPRINKLERS, JUNCTION BOXES & SMOKE DETECTORS TO ALIGN WITH ADJACENT LIGHT FIXTURES, UNLESS NOTED OTHERWISE.

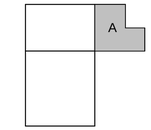

KEYPLAN

CEILING LEGEND

- RECESSED PROJECTOR SCREEN (C2)
- CEILING MOUNTED PROJECTOR. PROVIDE MOUNT, PROJECTOR NIC (C1)
- 2' X 4' LIGHT
- ACT-1 / 9'-4" — MATERIAL / HEIGHT A.F.F.
- SUPPLY DIFFUSER, SEE MECHANICAL FOR DIMENSIONS
- RETURN DIFFUSER, SEE MECHANICAL FOR DIMENSIONS
- EXHAUST FAN
- ACT 1 - 2'X2'
- GYPSUM BOARD CEILING (GWB)

O.T.S OPEN TO STRUCTURE. - PAINT ALL EXPOSED ELEMENTS

KEYNOTES

C1 CEILING MOUNTED PROJECTOR

C2 RECESSED PROJECTOR SCREEN

US ARMY CORPS OF ENGINEERS
OMAHA DISTRICT

SYM.	DATE	DESCRIPTION	APPR.	SYM.	DATE	DESCRIPTION	APPR.

DESIGNED BY: J.WIEDERHOLT
DWN BY: J.PICKA
CKD BY: -
SUBMITTED BY: -
DATE: APRIL 2016
SOLICITATION NO.: W912BF-16-B-0007
CONTRACT NO.: -
FILE NAME: MI48A-151
FILE NUMBER: AF212-220
SIZE: 34X22
PLOT SCALE: AS INDICATED
PLOT DATE: 4/22/16

U.S. ARMY ENGINEER DISTRICT
CORPS OF ENGINEERS
OMAHA, NEBRASKA

BURNS & McDONNELL
8201 NORMAN CENTER DR. #300
BLOOMINGTON, MN 55437
952-656-6003

FY15 P-341 CONSTRUCT ADDITION B1134
MINOT AFB, NORTH DAKOTA
PN: QJVF143101

REFLECTED CEILING PLAN - AREA A

SHEET IDENTIFICATION NUMBER
A-151

4/25/2016 8:40:58 AM
COPYRIGHT © 2016 BURNS & McDONNELL ENGINEERING COMPANY, INC.

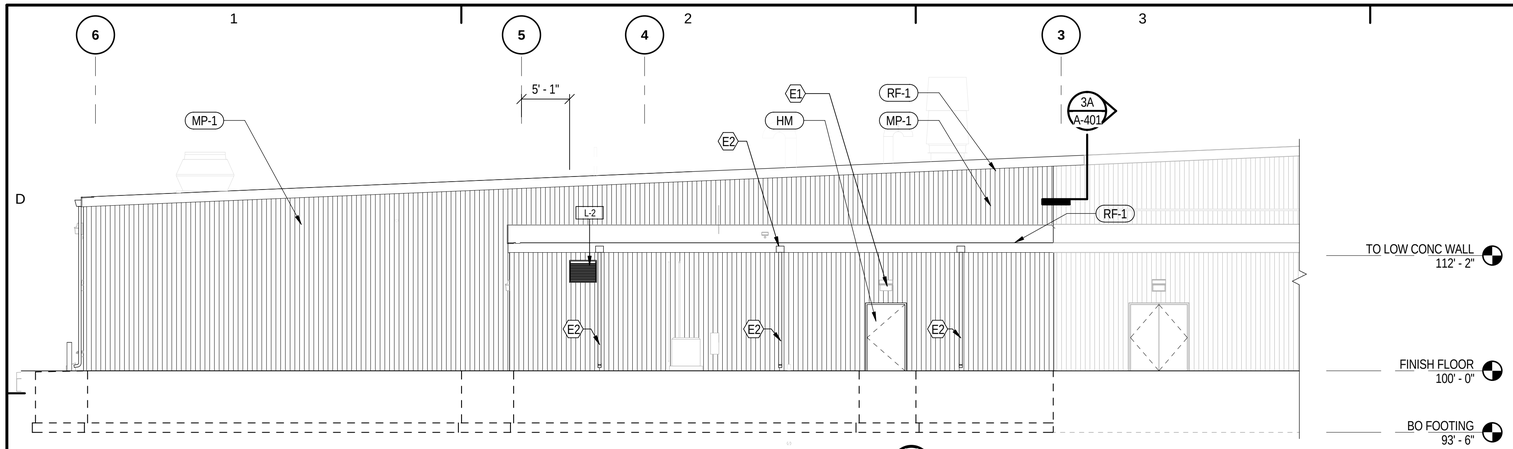

NORTH ELEVATION 2C A-201

0 4' 8' 16'
SCALE IN FEET

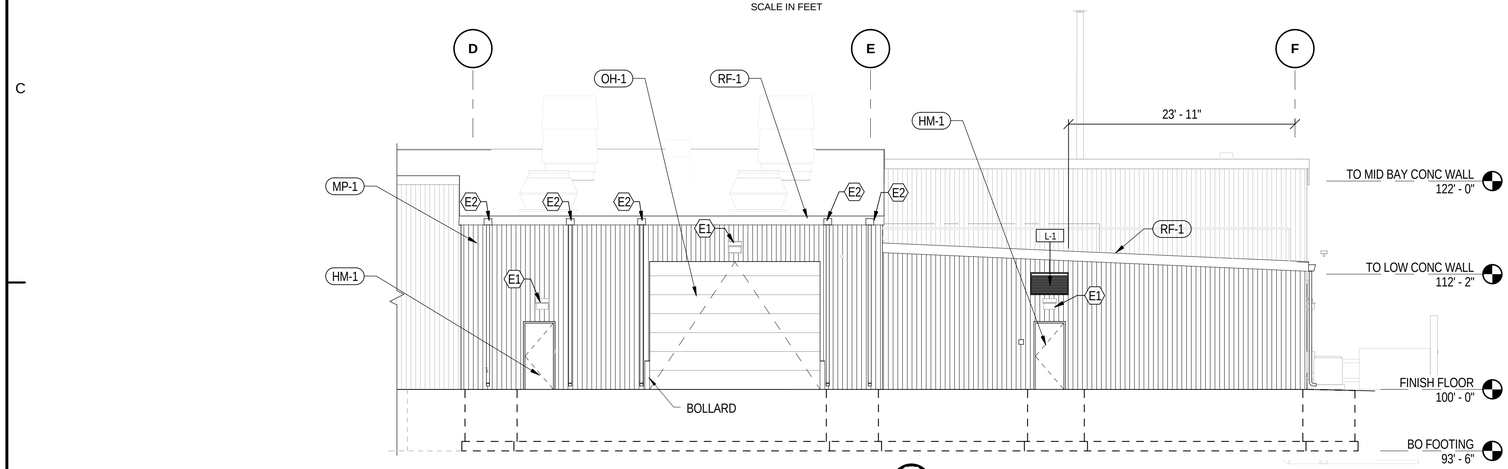

EAST ELEVATION 2B A-201

0 4' 8' 16'
SCALE IN FEET

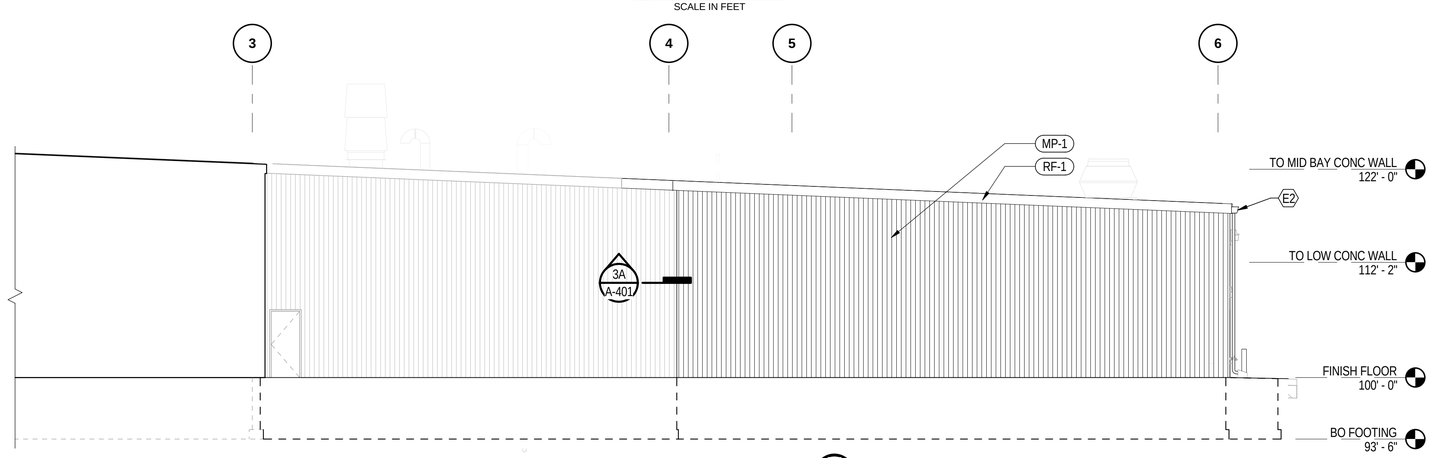

SOUTH ELEVATION 2A A-201

0 4' 8' 16'
SCALE IN FEET

AB-1 EXTERIOR FINISH LEGEND

CODE:	DESCRIPTION	MANUFACTURER	PRODUCT STYLE / TYPE	COMMENTS
DS	DOWNSPOUT	-	-	MATCH EXISTING
HM	HOLLOW METAL DOOR AND FRAME	CURRIES	HOLLOW METAL	MATCH EXISTING
L-X	LOUVER	NYSTROM	-	MATCH EXISTING
MP-1	RIBBED METAL PANEL	MORIN	-	MATCH EXISTING
OH-1	OVERHEAD DOOR	-	SECTIONAL	MATCH EXISTING
RF-1	ROOF FASCIA	-	-	MATCH EXISTING

NOTE:
1. EXTERIOR FINISH LEGEND ITEMS LISTED ARE BASIS OF DESIGN. EQUALS WILL BE ACCEPTED AS APPROVED BY CONTRACTING OFFICER. ALL FINISHES AND PROFILES SHALL MATCH EXISTING.

KEYNOTES

E1	EXTERIOR LIGHT, SEE ELECTRICAL
E2	PREFINISHED METAL COLLECTION AND DOWNSPOUT

US ARMY CORPS OF ENGINEERS
OMAHA DISTRICT

SYM.	DATE	DESCRIPTION	APPR.	SYM.	DATE	DESCRIPTION	APPR.

U.S. ARMY ENGINEER DISTRICT
CORPS OF ENGINEERS
OMAHA, NEBRASKA

BURNS & McDONNELL
8201 NORMAN CENTER DR. #300
BLOOMINGTON, MN 55437
952-656-6003

DESIGNED BY: J.WIEDERHOLT
DWN BY: J.PICKA
CKD BY: -
SUBMITTED BY: -
FILE NAME: MI48A-201
SIZE: 34X22
PLOT SCALE: AS INDICATED
DATE: APRIL 2016
SOLICITATION NO.: W912BF-16-B-0007
CONTRACT NO.: -
FILE NUMBER: AF212-220
PLOT DATE: 4/22/16

FY15 P-341 CONSTRUCT ADDITION B1134
MINOT AFB, NORTH DAKOTA
PN: QUVF143101

ENLARGED ELEVATIONS

SHEET IDENTIFICATION NUMBER
A-201

4/25/2016 8:41:03 AM
COPYRIGHT © 2016 BURNS & McDONNELL ENGINEERING COMPANY, INC.

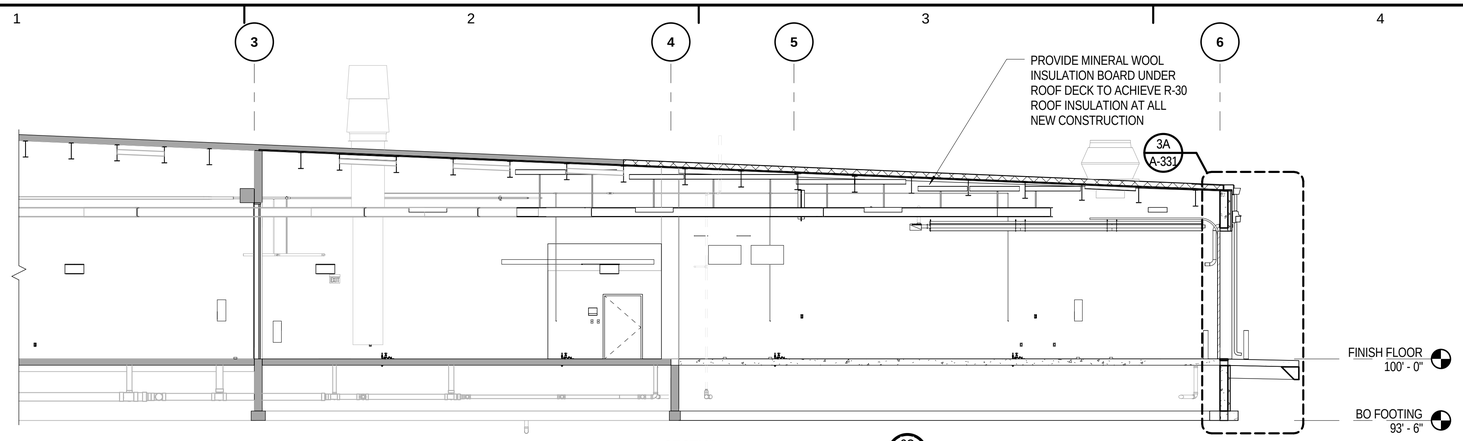

SECTION 3C A-301

BUILDING SECTION

0 4' 8' 16'

SCALE IN FEET

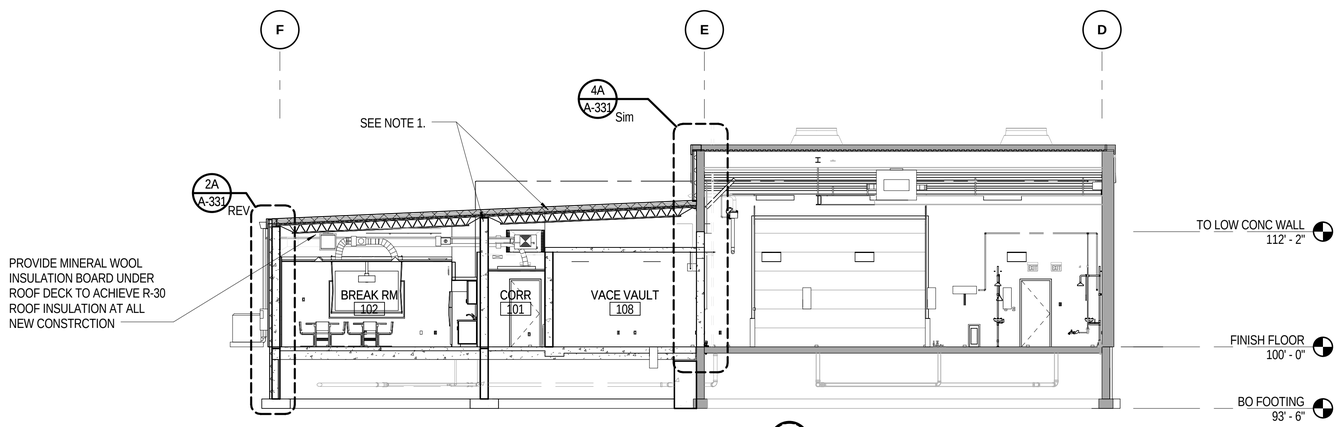

SECTION 3B A-301

BUILDING SECTION

0 4' 8' 16'

SCALE IN FEET

NOTE
1. TOP OF CONCRETE WALL:
FILL ANY GAP BETWEEN TOP OF CONCTETE WALL AND METAL DECKING WITH MINERAL WOOL INSULATION AND SHEET METAL PROFILE DECK FLUTE CLOSURE.

US ARMY CORPS OF ENGINEERS
OMAHA DISTRICT

SYM.	DATE	DESCRIPTION	APPR.	SYM.	DATE	DESCRIPTION	APPR.

U.S. ARMY ENGINEER DISTRICT
CORPS OF ENGINEERS
OMAHA, NEBRASKA

BURNS & McDONNELL
8201 NORMAN CENTER DR. #300
BLOOMINGTON, MN 55437
952-656-6003

DESIGNED BY: J.WIEDERHOLT
DWN BY: J.PICKA
CKD BY: -
SUBMITTED BY: -
FILE NAME: M/ABA-301
SIZE: 34X22
PLOT SCALE: AS INDICATED
DATE: APRIL 2016
SOLICITATION NO.: W912BF-16-B-0007
CONTRACT NO.: -
FILE NUMBER: A/F212-220
PLOT DATE: 4/22/16

FY15 P-341 CONSTRUCT ADDITION B1134
MINOT AFB, NORTH DAKOTA
PN: QVF143101

BUILDING SECTIONS

SHEET IDENTIFICATION NUMBER
A-301

4/25/2016 8:41:06 AM
COPYRIGHT © 2016 BURNS & McDONNELL ENGINEERING COMPANY, INC.

GENERAL WALL SECTION NOTES:

1. PROVIDE DAMP PROOFING AT ALL SUBGRADE PERIMETER WALLS WITH 3" MIN. INSULATION BOARD. THERE SHALL BE A MINIMUM 4" OVERLAP WITH VAPOR BARRIER. VAPOR BARRIER OVER DAMP PROOFING TYPICAL.
2. ROOF FASCIA TRIM SHALL MATCH EXISTING INCLUDING FINISH, DIMENSION, AND PROFILE.
3. WALL INSULATION SHALL BE R-15.2 MIN. AND EXTERIOR WALL SURFACE SHALL ALIGN WITH EXISTING EXTERIOR WALL ELEVATION.
4. BALLAST NOT SHOWN FOR CLARITY
5. MINERAL WOOL INSULATION BOARD UNDER ROOF DECK IS NOT SHOWN FOR CLARITY

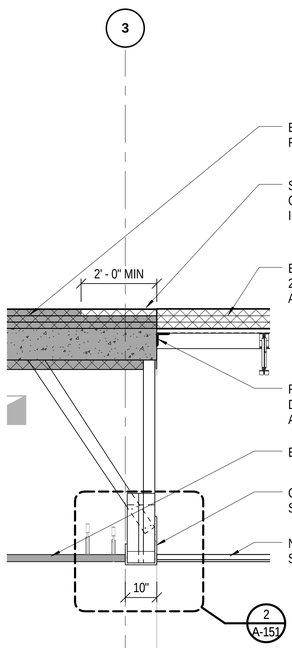

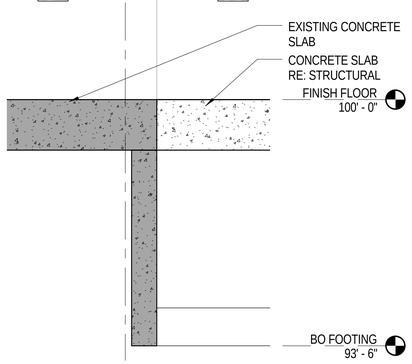

WALL SECTION 1A A-331

0 1' 2' 4'
SCALE IN FEET

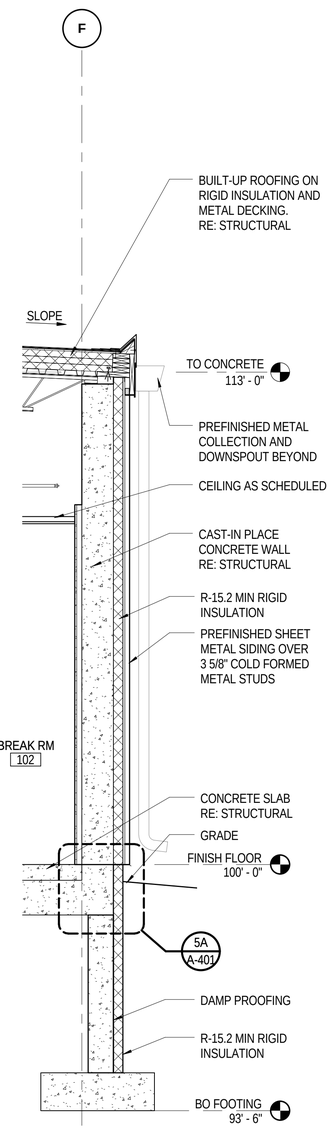

WALL SECTION 2A A-331

0 1' 2' 4'
SCALE IN FEET

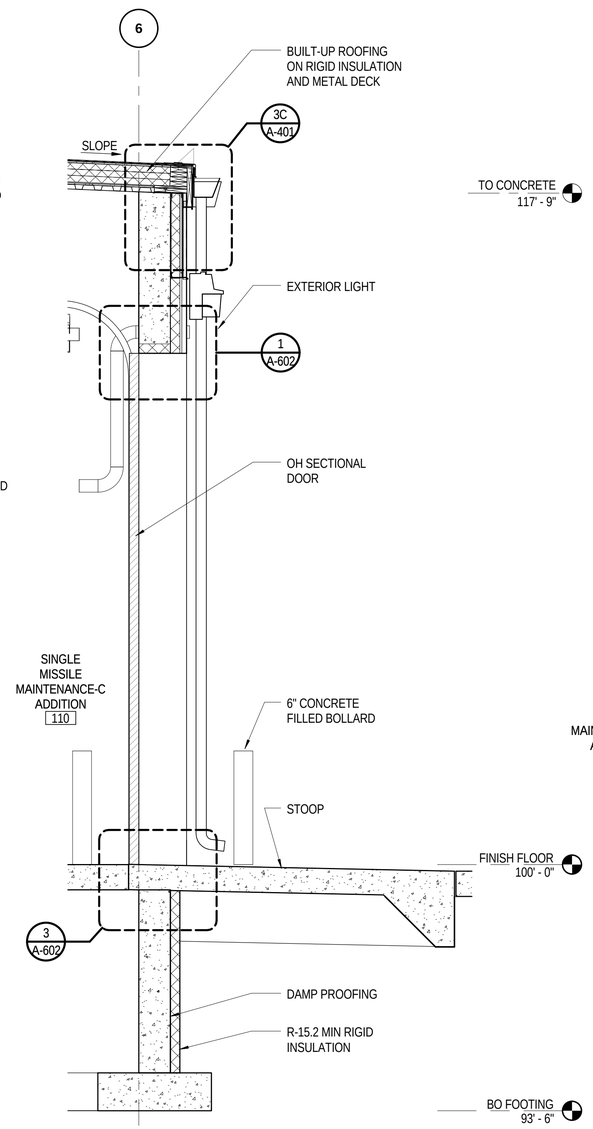

WALL SECTION - AT OH DOOR 3A A-331

0 1' 2' 4'
SCALE IN FEET

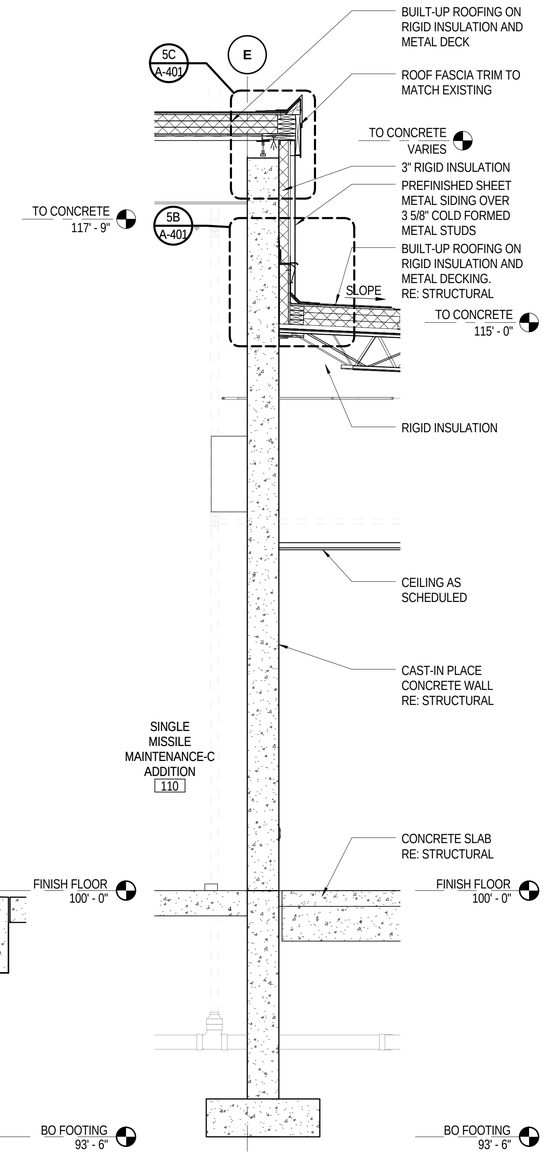

WALL SECTION 4A A-331

0 1' 2' 4'
SCALE IN FEET

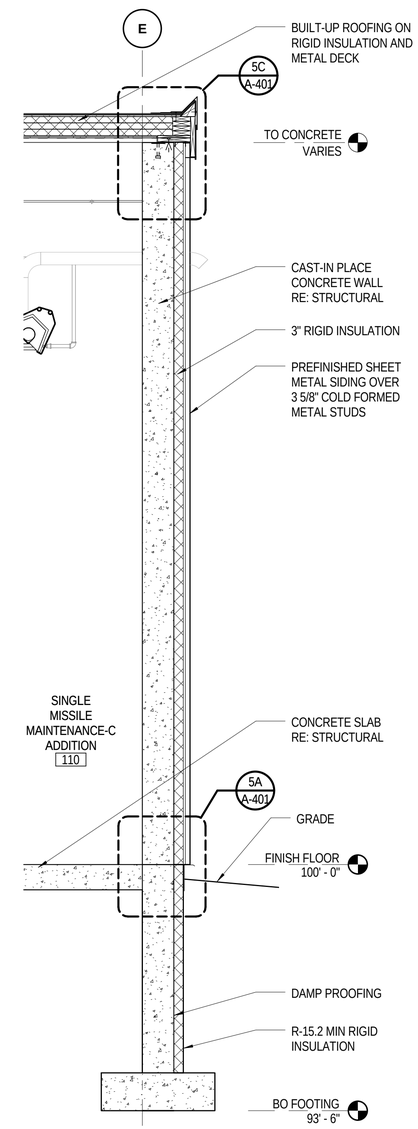

WALL SECTION - TYPICAL WALL 5A A-331

0 1' 2' 4'
SCALE IN FEET

US ARMY CORPS OF ENGINEERS
OMAHA DISTRICT

SYM.	DATE	DESCRIPTION	SYM.	DATE	DESCRIPTION	APPR.

DESIGNED BY: J.WIEDERHOLT
DWN BY: J.PICKA
CKD BY: -
SUBMITTED BY: -
DATE: APRIL 2016
SOLICITATION NO.: W912BF-16-B-0007
CONTRACT NO.: -
FILE NAME: MIA9A-331
FILE NUMBER: AF212-220
SIZE: 34X22
PLOT SCALE: AS INDICATED
PLOT DATE: 4/22/16

U.S. ARMY ENGINEER DISTRICT
CORPS OF ENGINEERS
OMAHA, NEBRASKA

BURNS & McDONNELL
8201 NORMAN CENTER DR. #300
BLOOMINGTON, MN 55437
952-656-6003

FY15 P-341 CONSTRUCT ADDITION B1134
MINOT AFB, NORTH DAKOTA
PN: QJVF143101

WALL SECTIONS

SHEET IDENTIFICATION NUMBER
A-331

4/25/2016 8:41:08 AM
COPYRIGHT © 2016 BURNS & McDONNELL ENGINEERING COMPANY, INC.

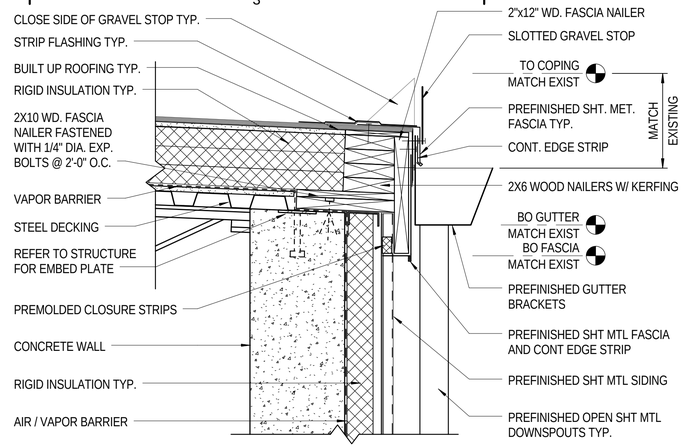

SECTION DETAIL 3C A-401

0 1/2' 1' 1 1/2'
SCALE IN FEET

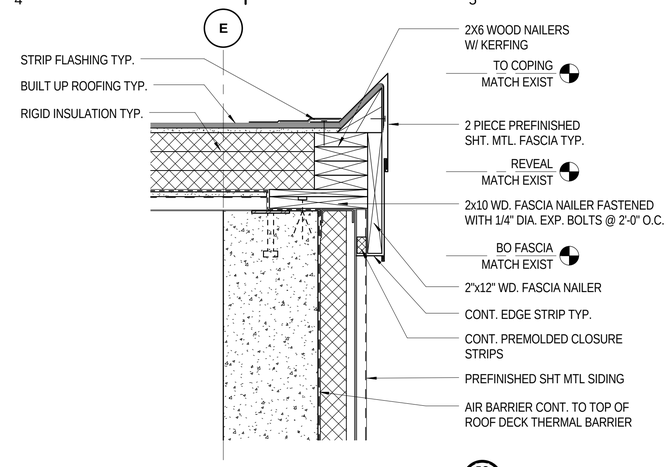

SECTION DETAIL 5C A-401

0 1/2' 1' 1 1/2'
SCALE IN FEET

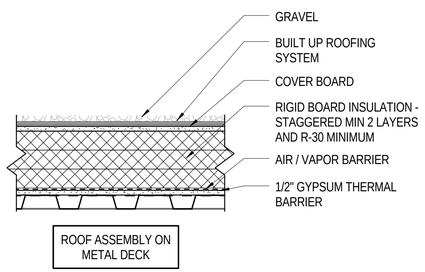

ROOF ASSEMBLIES 2B A-401

0 1/2' 1' 1 1/2'
SCALE IN FEET

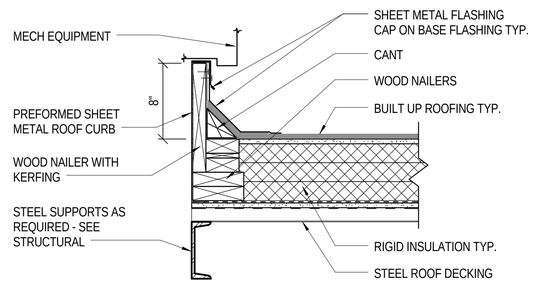

SECTION DETAIL 3B A-401

0 1/2' 1' 1 1/2'
SCALE IN FEET

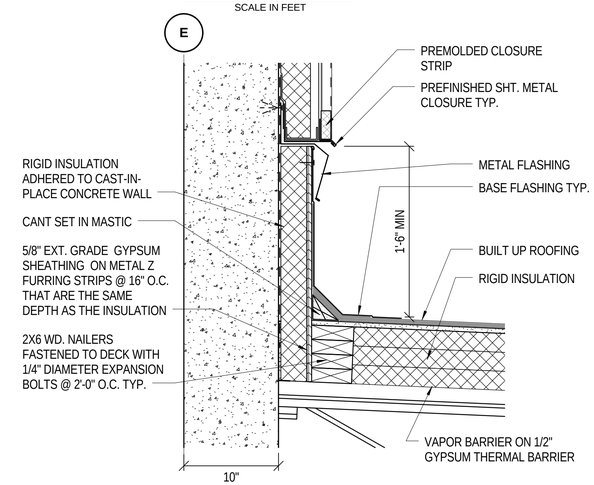

SECTION DETAIL 5B A-401

0 1/2' 1' 1 1/2'
SCALE IN FEET

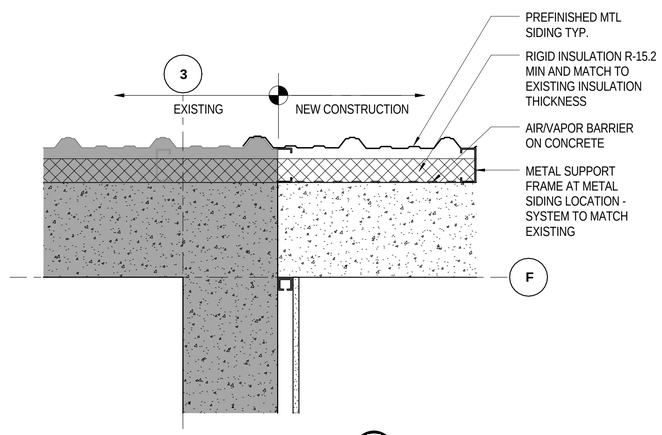

PLAN DETAIL 3A A-401

0 1/2' 1' 1 1/2'
SCALE IN FEET

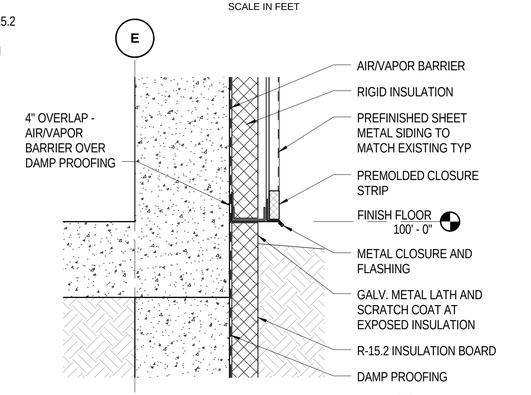

SECTION DETAIL 5A A-401

0 1/2' 1' 1 1/2'
SCALE IN FEET

US ARMY CORPS OF ENGINEERS
OMAHA DISTRICT

SYM.	DATE	DESCRIPTION	APPR.	SYM.	DATE	DESCRIPTION	APPR.

DESIGNED BY: J.WIEDERHOLT
DWN BY: J.PICKA
CKD BY: -
SUBMITTED BY: -
DATE: APRIL 2016
CONTRACT NO.: W912BF-16-B-0007
FILE NAME: MI49A-401
FILE NUMBER: AF212-220
SIZE: 34X22
PLOT SCALE: AS INDICATED
PLOT DATE: 4/22/16

U.S. ARMY ENGINEER DISTRICT
CORPS OF ENGINEERS
OMAHA, NEBRASKA

BURNS & McDONNELL
8201 NORMAN CENTER DR. #300
BLOOMINGTON, MN 55437
952-656-6003

FY15 P-341 CONSTRUCT ADDITION B1134
MINOT AFB, NORTH DAKOTA
PN: QJVF143101

DETAILS

SHEET IDENTIFICATION NUMBER
A-401

4/25/2016 8:41:09 AM
COPYRIGHT © 2016 BURNS & McDONNELL ENGINEERING COMPANY, INC.

PARTITION TYPE F

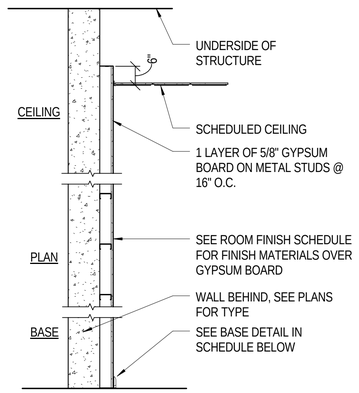

TYPE	STC	FIRE RATING	UL DESIGN NO	HEAD DETAIL	BASE DETAIL	TYPE COMMENTS
F1	-	-	-	9/A511	1/A512	1 5/8" METAL FURIRNG
F3	-	-	-	9/A511	1/A512	3 5/8" METAL FURIRNG

PARTITION TYPE P

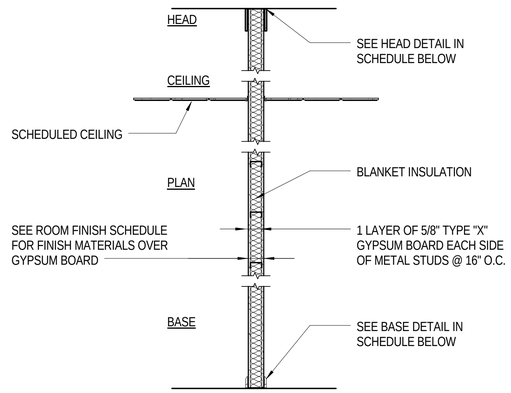

TYPE	STC	FIRE RATING	UL DESIGN NO	HEAD DETAIL	BASE DETAIL	TYPE COMMENTS
P3	-	-	-	3B/A-501	3A/A-501	3 5/8" METAL STUD

PARTITION TYPE C

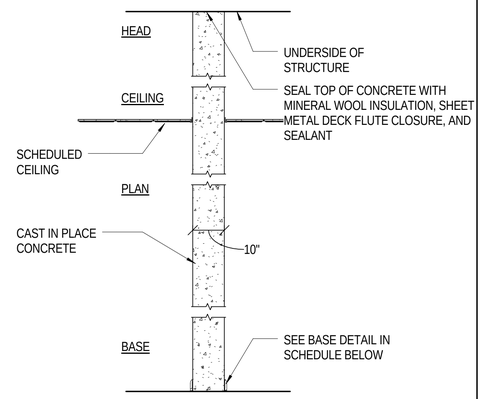

TYPE	STC	FIRE RATING	UL DESIGN NO	HEAD DETAIL	BASE DETAIL	TYPE COMMENTS
C1	STC-50	-	-	-	4A/A-501	
C2	STC-50	-	-	-	4A/A-501	PARTITION STOPS AT CONCRETE LID

PARTITION TYPE Pa

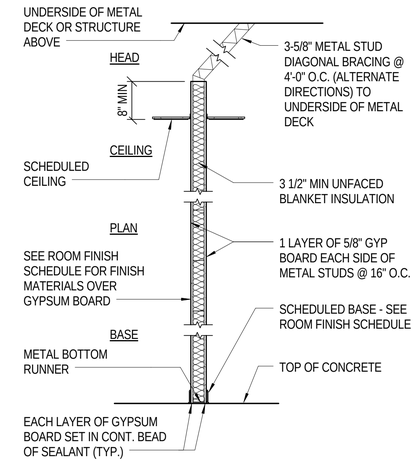

TYPE	STC	FIRE RATING	UL DESIGN NO	HEAD DETAIL	BASE DETAIL	TYPE COMMENTS
P3a	-	-	-		3A/A-501	3 5/8" METAL STUD
P8a	-	-	-		3A/A-501	8" METAL STUD

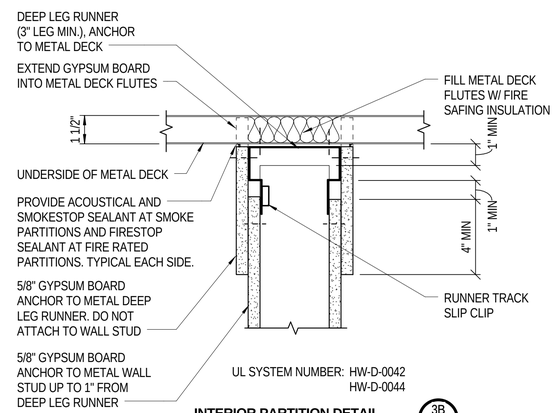

INTERIOR PARTITION DETAIL 3B / A-501

0 3" 6" 9"
SCALE IN FEET

PARTITION TYPES GENERAL NOTES:

1. WHERE STRUCTURAL MEMBERS PENETRATE FIRE-RATED GYPSUM BOARD WALLS, TAPE & SEAL WITH FIRE STOPPING SEALANT. WHERE STRUCTURAL MEMBERS PENETRATE FIRE-RATED CMU OR CONCRETE WALLS, SEAL WITH FIRE STOPPING SEALANT.
2. PROVIDE MINIMUM 20 GAUGE METAL BACKING AS REQUIRED FOR INSTALLATION OF EXTINGUISHER CABINETS, MESSAGE BOARDS, CABINETS, ACCESS PANELS, ELECTRICAL AND FIRE PROTECTION SYSTEM PANELS, UNLESS NOTED OTHERWISE.
3. ALL METAL STUDS AND BRACING SHALL BE 20 GAUGE UNLESS NOTED OTHERWISE. REFERENCE SPEC FOR ADDITIONAL REQUIREMENTS.
4. REFERENCE DRAWINGS A-101 FOR PARTITION TYPE LOCATIONS.
5. PROVIDE METAL STUD DIAGONAL BRACING @ 4'-0" O.C. (ALTERNATE DIRECTIONS) TO UNDERSIDE OF METAL DECK FOR ALL WALLS GREATER THAN 15'-0" IN HEIGHT.
6. ALL PARTITIONS DESIGNATED AS STC-50 (MINIMUM) SHALL BE SUBJECT TO TESTING TO DETERMINE STC VALUES STC (SOUND TRANSMISSION CLASS) VALUES ARE BASED ON PERFORMANCE OF SPEECH FREQUENCIES FROM 125-4000 Hz.
7. SEE DRAWING A-521 FOR TYPICAL PENETRATION DETAILS THROUGH FIRE-RATED PARTITIONS.

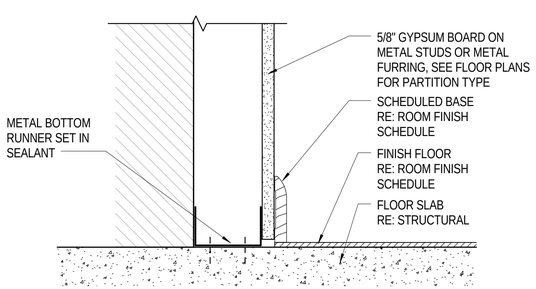

INTERIOR PARTITION DETAIL 5A / A-501

0 3" 6" 9"
SCALE IN FEET

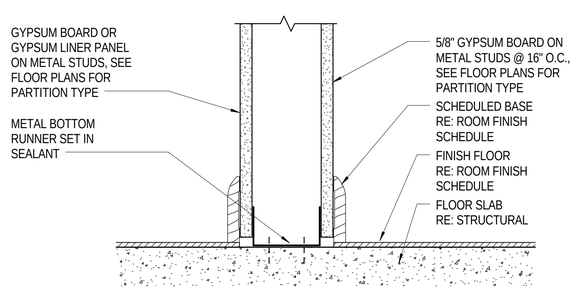

INTERIOR PARTITION DETAIL 3A / A-501

0 3" 6" 9"
SCALE IN FEET

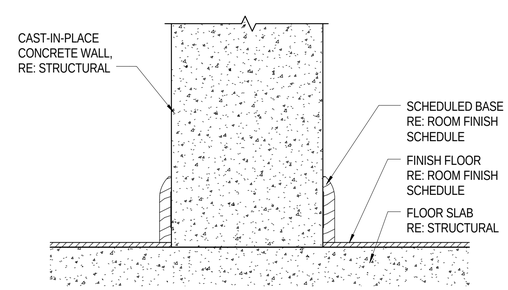

INTERIOR PARTITION DETAIL 4A / A-501

0 3" 6" 9"
SCALE IN FEET

US ARMY CORPS OF ENGINEERS
OMAHA DISTRICT

SYM.	DATE	DESCRIPTION	APPR.	SYM.	DATE	DESCRIPTION	APPR.

DESIGNED BY: J.WIEDERHOLT
DWN BY: J.PICKA
CKD BY: -
SUBMITTED BY: -
DATE: APRIL 2016
SOLICITATION NO.: W912BF-16-B-0007
CONTRACT NO.: -
FILE NAME: M/ABA-501
FILE NUMBER: A/F212-220
SIZE: 34X22
PLOT SCALE: AS INDICATED
PLOT DATE: 4/22/16

U.S. ARMY ENGINEER DISTRICT
CORPS OF ENGINEERS
OMAHA, NEBRASKA

BURNS & McDONNELL
8201 NORMAN CENTER DR. #300
BLOOMINGTON, MN 55437
952-656-6003

FY15 P-341 CONSTRUCT ADDITION B1134
MINOT AFB, NORTH DAKOTA
PN: QUVF143101

PARTITION TYPES

SHEET IDENTIFICATION NUMBER
A-501

4/25/2016 8:41:11 AM
COPYRIGHT © 2016 BURNS & McDONNELL ENGINEERING COMPANY, INC.

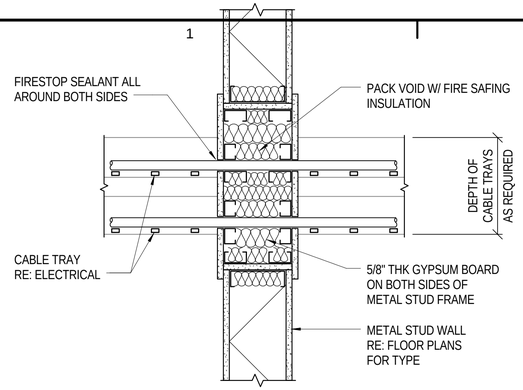

EQUAL TO UL SYSTEM NUMBER W-L-4005 TYPICAL CABLE TRAY PENETRATING GYP BOARD WALL DETAIL

DETAIL 1 A-521

METAL STUD WALL PENETRATION

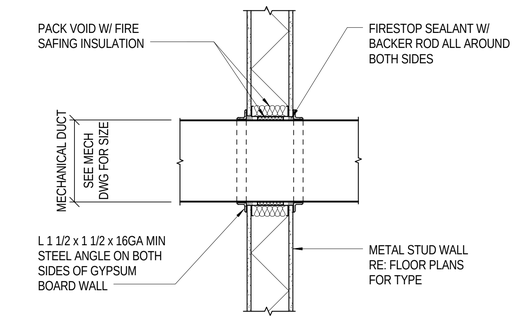

EQUAL TO UL SYSTEM NUMBER W-L-7040 OR W-L-7042 TYP. MECHANICAL DUCT PENETRATING GYP. BOARD WALL

DETAIL 2 A-521

METAL STUD WALL PENETRATION

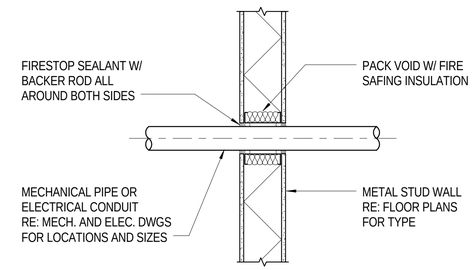

EQUAL TO UL SYSTEM NUMBER W-L-1001 TYP. PIPE OR CONDUIT PENETRATING GYP. BOARD WALL WITHOUT SLEEVE

DETAIL 3 A-521

METAL STUD WALL PENETRATION

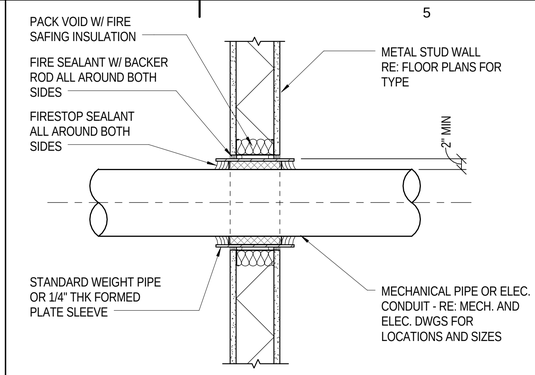

EQUAL TO UL SYSTEM NUMBER W-L-1003 TYP. PIPE OR CONDUIT PENETRATING GYP. BOARD WALL WITH SLEEVE DETAIL

DETAIL 4 A-521

METAL STUD WALL PENETRATION

NOTE: MAXIMUM OPENING 16SF WITH MAX DIMENSION OF 48"

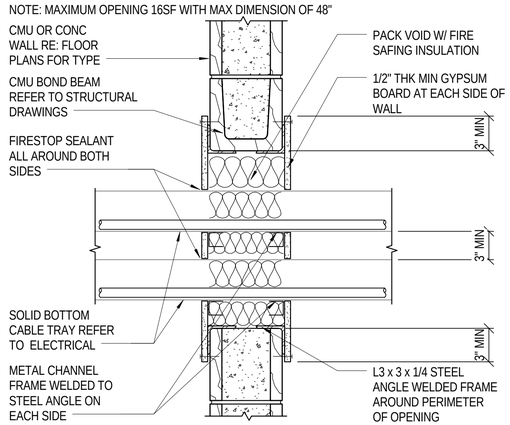

EQUAL TO UL SYSTEM NUMBER W-J-4008 TYPICAL CABLE TRAY PENETRATING CMU WALL DETAIL

DETAIL 5 A-521

CMU WALL PENETRATION

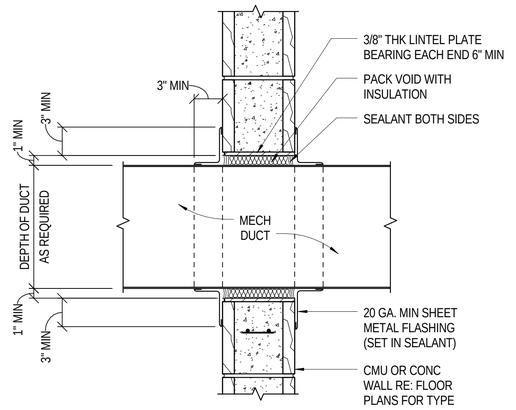

EQUAL TO UL SYSTEM NUMBER W-J-7021 TYP. METAL DUCT PENETRATING CMU WALL DETAIL (w/o DAMPER)

DETAIL 6 A-521

CMU WALL PENETRATION

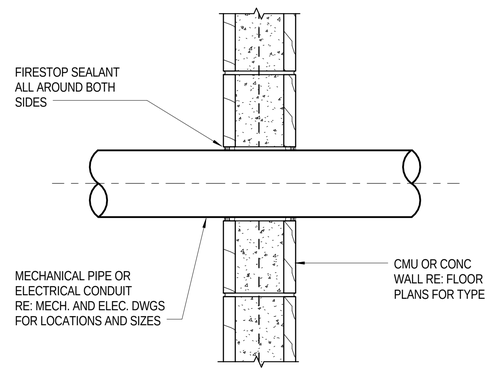

EQUAL TO UL SYSTEM NUMBER W-J-2071 PIPE OR CONDUIT PENETRATING CMU WALL w/o STEEL SLEEVE DETAIL

DETAIL 7 A-521

CMU WALL PENETRATION

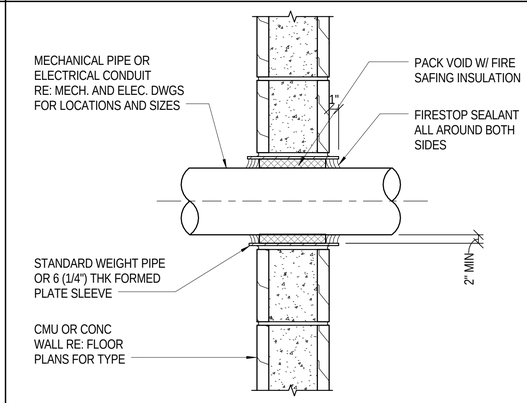

EQUAL TO UL SYSTEM NUMBER W-J-2071 PIPE OR CONDUIT THROUGH CMU WALL w/ STEEL SLEEVE

DETAIL 8 A-521

CMU WALL PENETRATION

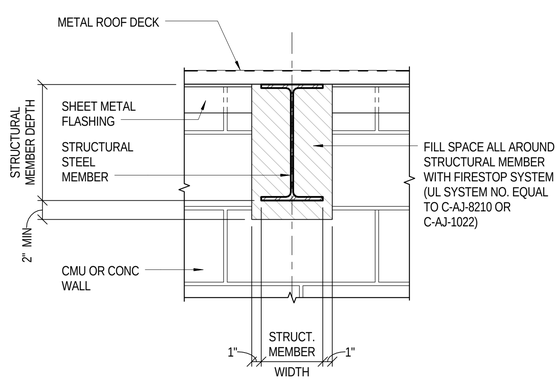

STRUCTURAL MEMBER THROUGH INTERIOR MASONRY WALL

DETAIL 9 A-521

DETAIL

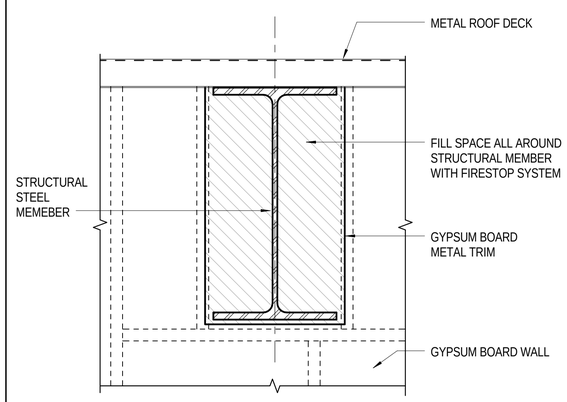

STRUCTURAL MEMBER THROUGH INTERIOR GYPSUM BOARD WALL

DETAIL 10 A-521

DETAIL

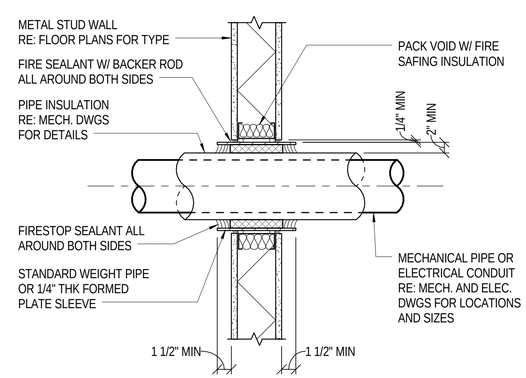

EQUAL TO UL SYSTEM NUMBER W-L-1003 TYP. PIPE OR CONDUIT PENETRATING GYP. BOARD WALL WITH SLEEVE DETAIL

DETAIL 11 A-521

078400-PENETRATIONS-005

4/25/2016 8:41:12 AM
COPYRIGHT © 2016 BURNS & McDONNELL ENGINEERING COMPANY, INC.

US ARMY CORPS OF ENGINEERS
OMAHA DISTRICT

SYM.	DATE	DESCRIPTION	SYM.	DATE	DESCRIPTION	APPR.

DESIGNED BY: J.WEDERHOLT | DATE: APRIL 2016
DWN BY: T.OTTO | CKD BY: J.PICKA | SOLICITATION NO.: W912BF-16-B-0007
SUBMITTED BY: - | CONTRACT NO.: -
FILE NAME: MIA8A-521 | FILE NUMBER: AF212-220
SIZE: 34X22 | PLOT SCALE: AS INDICATED | PLOT DATE: 4/22/16

U.S. ARMY ENGINEER DISTRICT CORPS OF ENGINEERS OMAHA, NEBRASKA

BURNS & McDONNELL 8201 NORMAN CENTER DR. #300 BLOOMINGTON, MN 55437 952-656-6003

FY15 P-341 CONSTRUCT ADDITION B1134
MINOT AFB, NORTH DAKOTA
PN: QJVF143101

PENETRATION DETAILS

SHEET IDENTIFICATION NUMBER
A-521

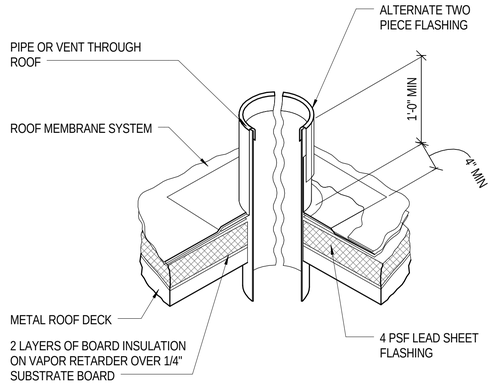

DETAIL 2 / A-522

ROOF PENETRATION

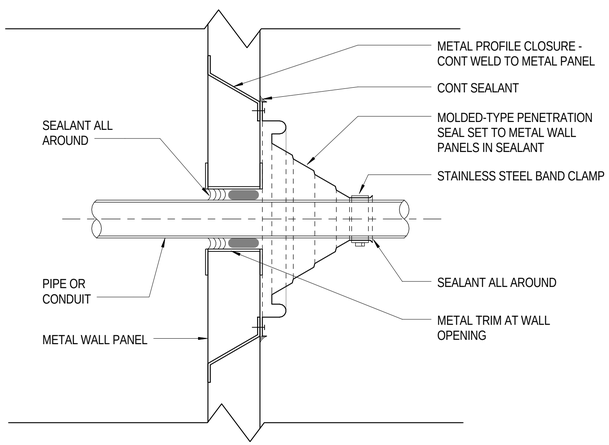

MECHANICAL PIPE OR CONDUIT THROUGH METAL WALL PANEL

DETAIL 4 / A-522

WALL PENETRATION

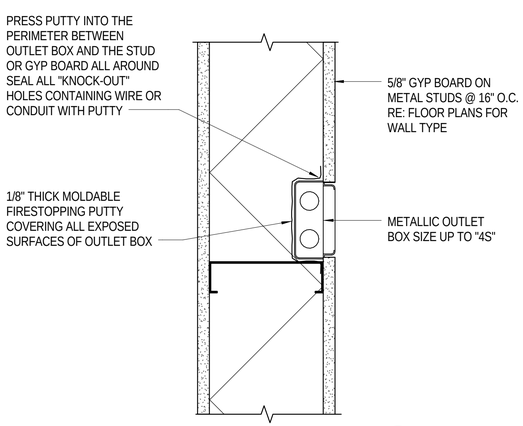

DETAIL 7 / A-522

TYPICAL OUTLET FIRE STOPPING

US ARMY CORPS OF ENGINEERS
OMAHA DISTRICT

SYM.	DATE	DESCRIPTION	APPR.	SYM.	DATE	DESCRIPTION	APPR.

U.S. ARMY ENGINEER DISTRICT
CORPS OF ENGINEERS
OMAHA, NEBRASKA

BURNS & McDONNELL
8201 NORMAN CENTER DR. #300
BLOOMINGTON, MN 55437
952-656-6003

DESIGNED BY: J.WIEDERHOLT	DATE: APRIL 2016
DWN BY: J.PICKA	CKD BY: -	SOLICITATION NO.: W912BF-16-B-0007
SUBMITTED BY: -	CONTRACT NO.: -
FILE NAME: M/A8A-522	FILE NUMBER: A/F212-220
SIZE: 34X22	PLOT SCALE: AS INDICATED	PLOT DATE: 4/22/16

FY15 P-341 CONSTRUCT ADDITION B1134
MINOT AFB, NORTH DAKOTA
PN: QVF143101

PENETRATION DETAILS

SHEET IDENTIFICATION NUMBER
A-522

4/25/2016 8:41:13 AM
COPYRIGHT © 2016 BURNS & McDONNELL ENGINEERING COMPANY, INC.

DOOR SCHEDULE

DOOR NUMBER	DOOR SIZE WIDTH	DOOR SIZE HEIGHT	DOOR TYPE	DOOR MATERIAL	DOOR FINISH	FRAME TYPE	FRAME MATERIAL	FRAME FINISH	ASSEMBLY RATING	DETAIL HEAD	DETAIL JAMB	DETAIL SILL	HARDWARE SET	REMARKS
101	3' - 0"	7' - 0"	F-IN	HM	PAINT	1.1	HM	PAINT	-	4/A-602	5/A-602	6/A-602	5	2
102.1	3' - 0"	7' - 0"	NL	HM	PAINT	1.1	HM	PAINT	-	1/A-603	2/A-603	3/A-603	2	
102.2	3' - 0"	7' - 0"	NL	HM	PAINT	1.1	HM	PAINT	-	1/A-603	2/A-603	3/A-603	2	
103	4' - 0"	7' - 0"	F-IN	HM	PAINT	1.1	HM	PAINT	-	4/A-602	5/A-602	6/A-602	6	
104	3' - 0"	7' - 0"	F	HM	PAINT	1.1	HM	PAINT	-	7/A-602	8/A-602	9/A-602	1	
105	3' - 0"	7' - 0"	F	HM	PAINT	1.1	HM	PAINT	-	7/A-602	8/A-602	9/A-602	1	
106	3' - 0"	7' - 0"	F	HM	PAINT	1.1	HM	PAINT	-	1/A-603	2/A-603	3/A-603	1	
107	3' - 0"	7' - 0"	F	HM	PAINT	1.1	HM	PAINT	-	1/A-603	2/A-603	3/A-603	1	
108	3' - 10"	6' - 8"	F	HM	PAINT	1.1	HM	PAINT	90 MIN	7/A-602	8/A-602	9/A-602 SIM	3	1, 3
109	3' - 0"	7' - 0"	F	HM	PAINT	1.1	HM	PAINT	-	1/A-603	2/A-603	3/A-603	1	
110.1	18' - 0"	13' - 6"	OH	STL	PAINT		-	-	-	1/A-602	2/A-602	3/A-602	-	
110.2	3' - 0"	7' - 0"	F-IN	HM	PAINT	1.1	HM	PAINT	-	4/A-602	5/A-602	6/A-602	4	

-

FRAME TYPES

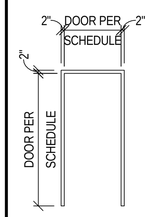

1.1

DOOR TYPES

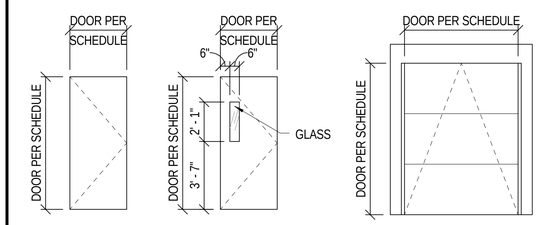

F = NOT INSULATED
F-IN = INSULATED

NL = NARROW LITE

OH = INSULATED

DOOR REMARKS

1. SECURE DOOR LOCK X-10
2. EMERGENCY EXIT ONLY
3. STC 50 ACOUSTIC DOOR WITH SOUND SEAL SPEC: 08 34 73 SOUND CONTROL DOOR ASSEMBLY

DOOR GENERAL NOTE
1. ALL EXTERIOR DOORS ARE GALVANIZED AND INSULATED
2. GLASS INSERT IS 1/4" MIN THICK CLEAR TEMPERED

LOUVER TYPES

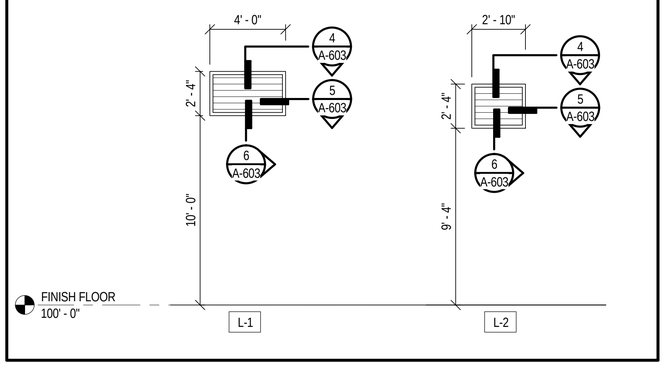

LOUVER GENERAL NOTE

1. LOUVER FINISH SHALL MATCH TO ADJACENT WALL PANEL FINISH

ROOM FINISH SCHEDULE

ROOM NUMBER	ROOM NAME	FLOOR	BASE MATERIAL	BASE HEIGHT	WALLS NORTH	WALLS EAST	WALLS SOUTH	WALLS WEST	CEILING	REMARKS
101	CORR	TLP-1	RB-1	4"	P-1	P-1	P-1	P-1	ACT-1/GWB	2
102	BREAK RM	VCT-1	RB-1	4"	P-2	P-1	P-1	P-1	ACT-1/GWB	
103	COMM	CONC.	-	-	P-1	P-1	P-1	P-1	ACT-1	SEALED CONC. FLOOR
104	LOW BAY NCOIC	VCT-1	RB-1	4"	P-1	P-1	P-1	P-1	ACT-1	
105	OFFICE 1	VCT-1	RB-1	4"	P-1	P-1	P-1	P-1	ACT-1	
106	OFFICE 2	VCT-1	RB-1	4"	P-1	P-1	P-1	P-1	ACT-1	
107	HIGH BAY NCOIC	VCT-1	RB-1	4"	P-1	P-1	P-1	P-1	ACT-1	
108	VACE VAULT	EP-1	-	-	P-1	P-1	P-1	P-1	ACT-1	
109	VACE OFFICE	VCT-1	RB-1	4"	P-1	P-1	P-1	P-1	ACT-1	
110	SINGLE MISSILE MAINTENANCE-C ADDITION	EP-1	-	-	P-3	P-3	P-3	P-3	ACT-1	1

ROOM FINISH SCHEDULE REMARKS

1. WAINSCOT TO MATCH EXIST
2. CHAIR RAIL TO MATCH EXIST

FINISH LEGEND

FINISH LEGEND - BASIS OF DESIGN OR EQUIVALENT

MATERIAL	MANUF.	MODEL NUMBER	PRODUCT NUMBER	COLOR	DESCRIPTION	REMARKS
ACOUSTICAL CEILING TILE						
ACT-1					24" x 24"	
FLOORING						
EP-1					EPOXY FLOORING	
VCT-1					VINYL COMPOSITIE TILE	
PAINT						
P-1					ACRYLIC/LATEX	
P-2					ACRYLIC/LATEX	
P-3					ACRYLIC/LATEX	
PLASTIC LAMINATE						
PLAM-1						
RESILIENT BASE						
RB-1						
SOLID SURFACE FABRICATION						
SSF-1					COUNTER TOP	
TILE						
TLP-1					PORCELAIN	

GENERAL ROOM FINISH SCHEDULE NOTES:

1. REFER TO SPECIFICATIONS FOR THE BASIS OF DESIGN OR EQUIVALENT MANUFACTURER TECHNICAL REQUIREMENTS.
2. REFER TO INTERIOR ELEVATIONS, REFLECTED CEILING DRAWINGS, AND INTERIOR DETAIL DRAWINGS FOR ADDITIONAL FINISH PLACEMENT INFORMATION.
3. REFER TO ELECTRICAL DRAWINGS, MECHANICAL DRAWINGS, STRUCTURAL DRAWINGS AND COMMUNICATION DRAWINGS FOR COORDINATION OF BUILDING FINISHES TO BUILDING SYSTEMS.
4. INTERIOR CAULKING TO MATCH ADJACENT WALL FINISH COLOR.
5. ALL EXPOSED CONCRETE FLOORS SHALL BE SEALED.
6. PAINT ALL EXPOSED STRUCTURAL STEEL ELEMENTS, MISCELLANEOUS STEEL, PIPING, HANGERS, VALVES AND CONDUITS EXCEPT PRE-FINISHED LINER PANELS. THE PAINT COLOR SHALL BE AS INDICATED ON SCHEDULE. ALL FIRE PROTECTION PIPING COLOR SHALL BE SAFETY RED.
7. ALL EXPOSED MECHANICAL AND ELECTRICAL EQUIPMENT AND ASSOCIATED SUPPORTING EQUIPMENT TO BE PAINTED.

US ARMY CORPS OF ENGINEERS
OMAHA DISTRICT

SYM.	DATE	DESCRIPTION	APPR.	SYM.	DATE	DESCRIPTION	APPR.

DESIGNED BY: J.WIEDERHOLT
DWN BY: J.PICKA
CKD BY: -
SUBMITTED BY: -
DATE: APRIL 2016
SOLICITATION NO.: W912BF-16-B-0007
CONTRACT NO.: -
FILE NAME: MI49A-601
FILE NUMBER: AF212-220
PLOT SCALE: AS INDICATED
PLOT DATE: 4/22/16
SIZE: 34X22

U.S. ARMY ENGINEER DISTRICT
CORPS OF ENGINEERS
OMAHA, NEBRASKA

BURNS & McDONNELL
8201 NORMAN CENTER DR. #300
BLOOMINGTON, MN 55437
952-656-6003

FY15 P-341 CONSTRUCT ADDITION B1134
MINOT AFB, NORTH DAKOTA
PN: QJVF143101

SCHEDULES

SHEET IDENTIFICATION NUMBER
A-601

4/25/2016 8:41:17 AM
COPYRIGHT © 2016 BURNS & McDONNELL ENGINEERING COMPANY, INC.

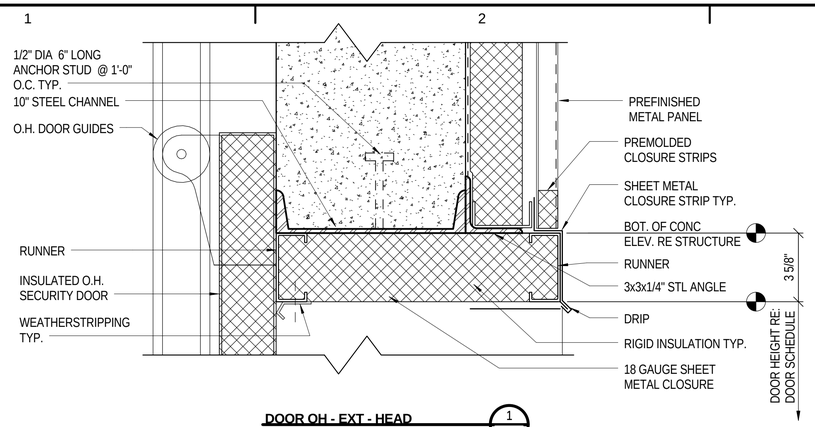

DOOR OH - EXT - HEAD (1 / A-602)

0 3" 6" 9" SCALE IN FEET

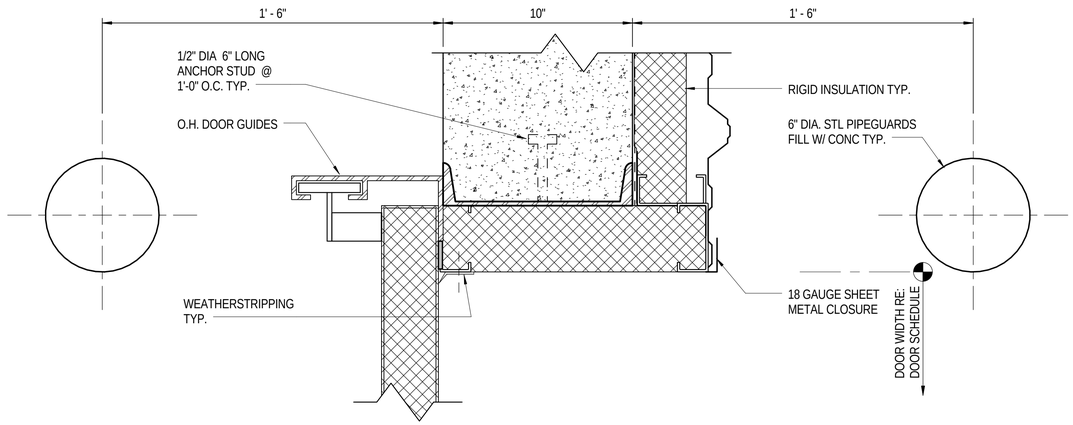

DOOR OH - EXT - JAMB (2 / A-602)

0 3" 6" 9" SCALE IN FEET

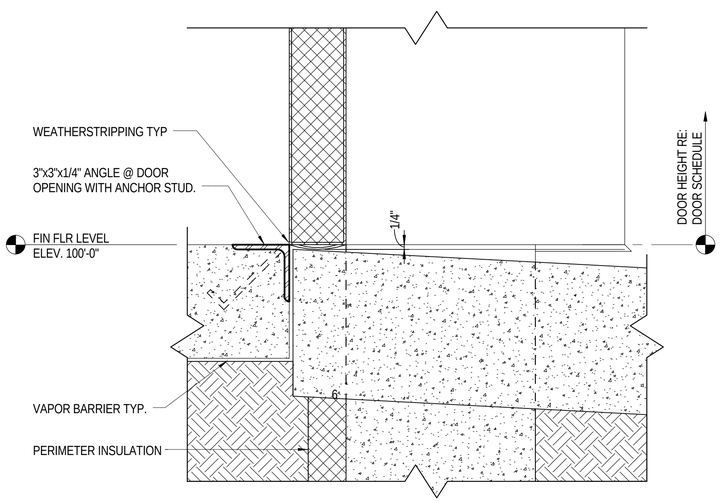

DOOR OH - EXT - SILL (3 / A-602)

0 3" 6" 9" SCALE IN FEET

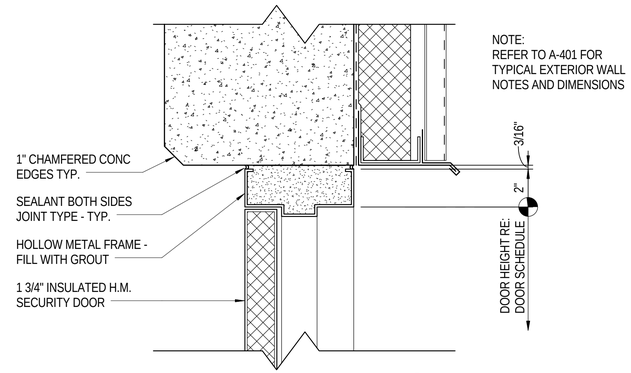

DOOR - EXT - HEAD (4 / A-602)

0 3" 6" 9" SCALE IN FEET

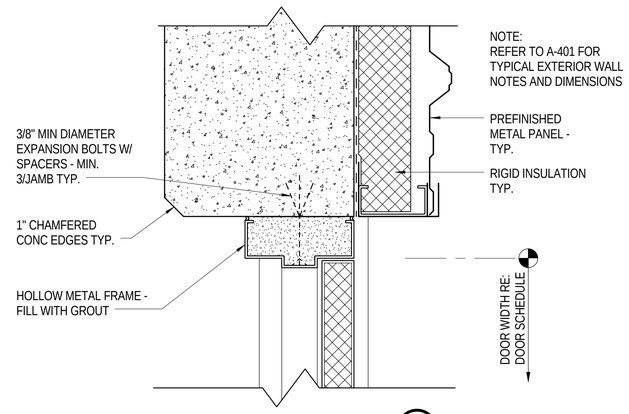

DOOR - EXT - JAMB (5 / A-602)

0 3" 6" 9" SCALE IN FEET

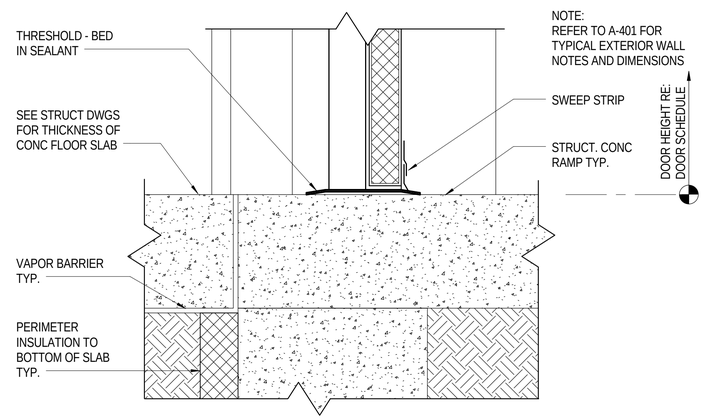

SILL DETAIL (6 / A-602)

0 3" 6" 9" SCALE IN FEET

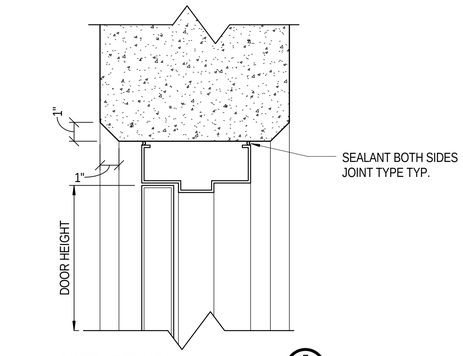

DOOR - INT - HEAD (7 / A-602)

0 3" 6" 9" SCALE IN FEET

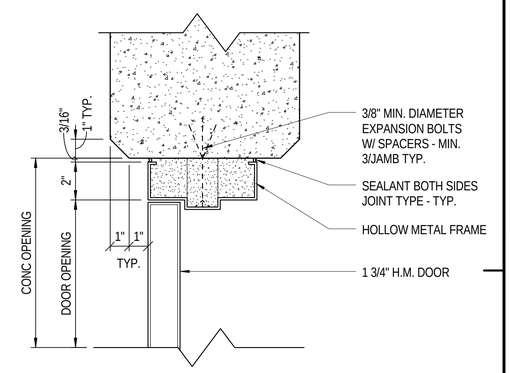

DOOR - INT - JAMB (8 / A-602)

0 3" 6" 9" SCALE IN FEET

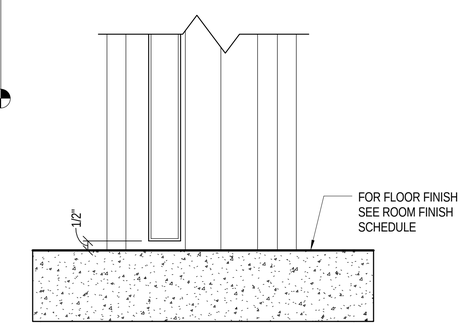

DOOR - INT - SILL (9 / A-602)

0 3" 6" 9" SCALE IN FEET

US ARMY CORPS OF ENGINEERS
OMAHA DISTRICT

SYM.	DATE	DESCRIPTION	APPR.	SYM.	DATE	DESCRIPTION	APPR.

DESIGNED BY: J.WIEDERHOLT
DWN BY: J.PICKA
CKD BY: -
SUBMITTED BY: -
DATE: APRIL 2016
SOLICITATION NO.: W912BF-16-B-0007
CONTRACT NO.: -
FILE NUMBER: AF212-220
FILE NAME: MIA9A-602
PLOT DATE: 4/22/16
SIZE: 34X22
PLOT SCALE: AS INDICATED

U.S. ARMY ENGINEER DISTRICT
CORPS OF ENGINEERS
OMAHA, NEBRASKA

BURNS & McDONNELL
8201 NORMAN CENTER DR. #300
BLOOMINGTON, MN 55437
952-656-6003

FY15 P-341 CONSTRUCT ADDITION B1134
MINOT AFB, NORTH DAKOTA
PN: QJVF143101

DOOR DETAILS

SHEET IDENTIFICATION NUMBER
A-602

4/25/2016 8:41:19 AM
COPYRIGHT © 2016 BURNS & McDONNELL ENGINEERING COMPANY, INC.

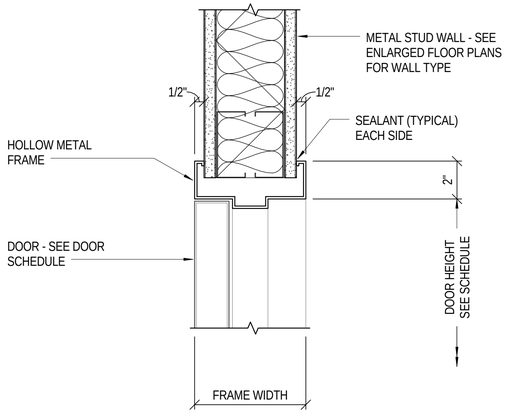

DETAIL (HEAD) 1 / A-603

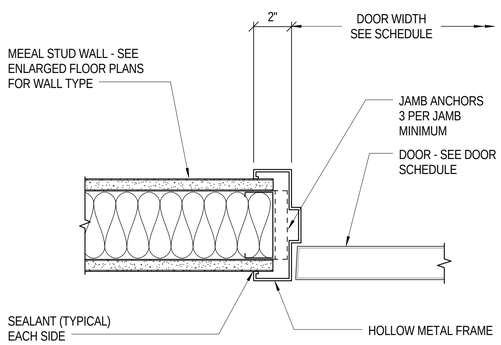

DETAIL (JAMB) 2 / A-603

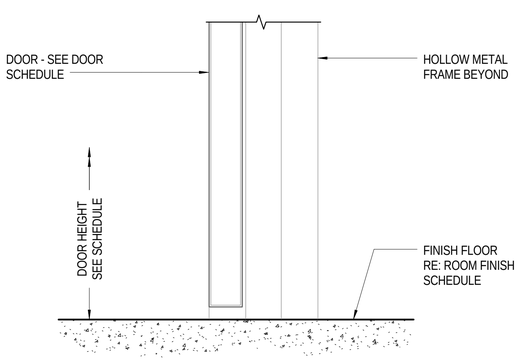

DETAIL (SILL) 3 / A-603

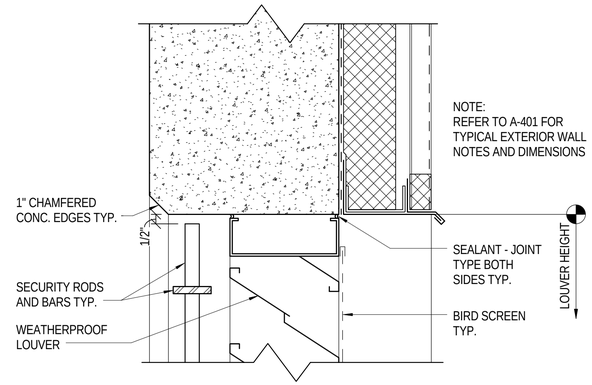

LOUVER - EXT - HEAD 4 / A-603

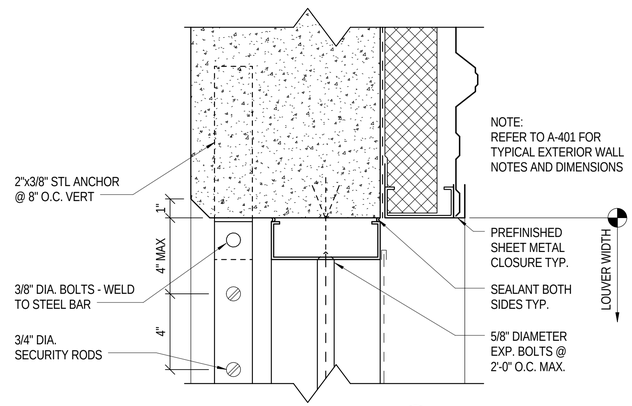

LOUVER - EXT - JAMB 5 / A-603

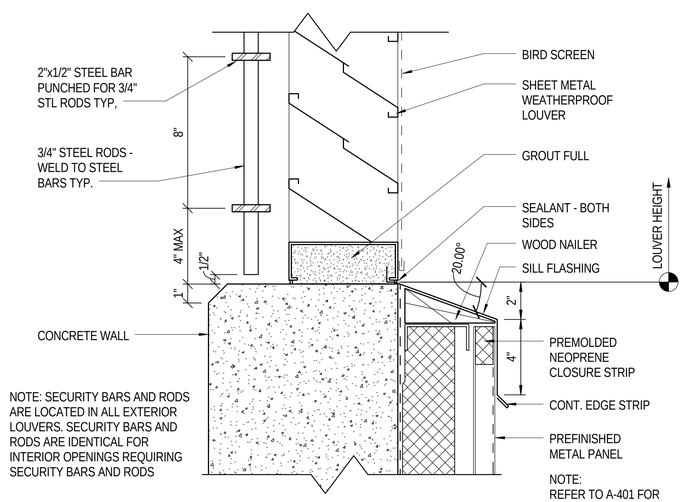

LOUVER - EXT - SILL 6 / A-603

US ARMY CORPS OF ENGINEERS
OMAHA DISTRICT

SYM.	DATE	DESCRIPTION	SYM.	DATE	DESCRIPTION	APPR.

DESIGNED BY: Designer
DRAWN BY: Author
CKD BY: Checker
SUBMITTED BY: -
DATE: APRIL 2016
SOLICITATION NO.: W912BF-16-B-0007
CONTRACT NO.: -
FILE NAME: MI49A-603
FILE NUMBER: AF212-220
SIZE: 34X22
PLOT SCALE: AS INDICATED
PLOT DATE: 4/22/16

U.S. ARMY ENGINEER DISTRICT
CORPS OF ENGINEERS
OMAHA, NEBRASKA

BURNS & McDONNELL
8201 NORMAN CENTER DR. #300
BLOOMINGTON, MN 55437
952-656-6003

FY15 P-341 CONSTRUCT ADDITION B1134
MINOT AFB, NORTH DAKOTA
PN: QJVF143101

DOOR DETAILS

SHEET IDENTIFICATION NUMBER
A-603

4/25/2016 8:41:19 AM
COPYRIGHT © 2016 BURNS & McDONNELL ENGINEERING COMPANY, INC.

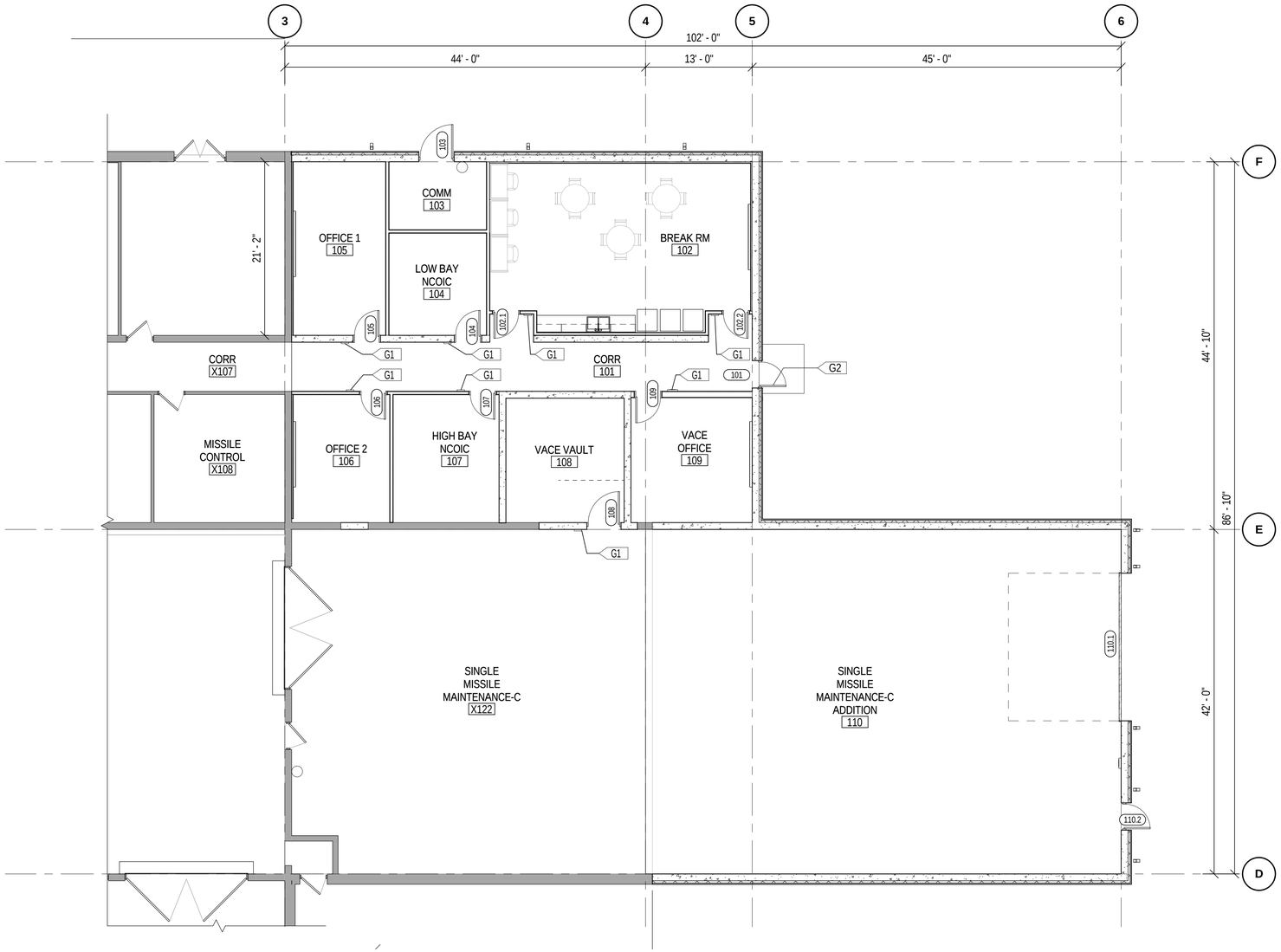

SIGNAGE PLAN

0 4' 8' 16'
SCALE IN FEET

GENERAL SIGNAGE PLACEMENT PLAN NOTES:

1. G1 SIGN TYPE SHALL MATCH EXISTING ROOM IDENTIFICATION

2. CONTRACTOR SHALL INVESTIGATE EXISTING SIGN DURING SITE VISIT AND PROVIDE SAME SIGN TYPE FOR NEW CONSTRUCTION
3. REFER TO SIGNAGE MOUNTING HEIGHTS TO MATCH EXISTING. SIGNS TO BE WALL-MOUNTED ON THE LATCH SIDE OF DOOR OR AS INDICATED. HEIGHTS, CLEARANCES, AND CONFIGURATIONS SHALL MATCH EXISTING SIGN UNLESS NOTED OTHERWISE.
4. EXTERIOR AND INTERIOR SIGNAGE SHALL COMPLY WITH UFG REQUIREMENTS, GUIDANCE FOR AIR FORCE SIGNAGE AS FOUND IN UFC3-1120-01 "AIR FORCE STANDARDS" AND BASE STANDARDS.

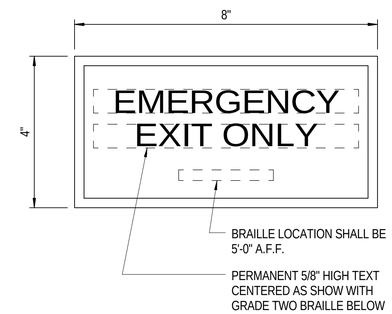

SIGN TYPE G2
NOT TO SCALE

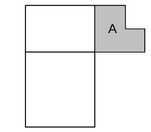

KEYPLAN

US ARMY CORPS
OF ENGINEERS
OMAHA DISTRICT

SYM.	DATE	DESCRIPTION	SYM.	DATE	DESCRIPTION	APPR.

U.S. ARMY ENGINEER DISTRICT
CORPS OF ENGINEERS
OMAHA, NEBRASKA

BURNS & McDONNELL
8201 NORMAN CENTER DR. #300
BLOOMINGTON, MN 55437
952-656-6003

DESIGNED BY: J.WIEDERHOLT
DWN BY: J.PICKA
CKD BY: -
SUBMITTED BY: -
FILE NAME: MIA8A-701
SIZE: 34X22
PLOT SCALE: AS INDICATED
DATE: APRIL 2016
SOLICITATION NO.: W912BF-16-B-0007
CONTRACT NO.: -
FILE NUMBER: AF212-220
PLOT DATE: 4/22/16

FY15 P-341 CONSTRUCT ADDITION B1134
MINOT AFB, NORTH DAKOTA
PN: QJVF143101

SIGNAGE PLAN - AREA A

SHEET
IDENTIFICATION
NUMBER
A-701

4/25/2016 8:41:20 AM
COPYRIGHT © 2016 BURNS & McDONNELL ENGINEERING COMPANY, INC.

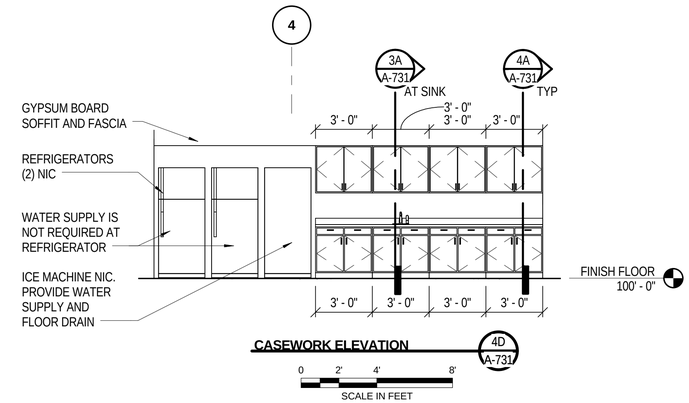

CASEWORK ELEVATION

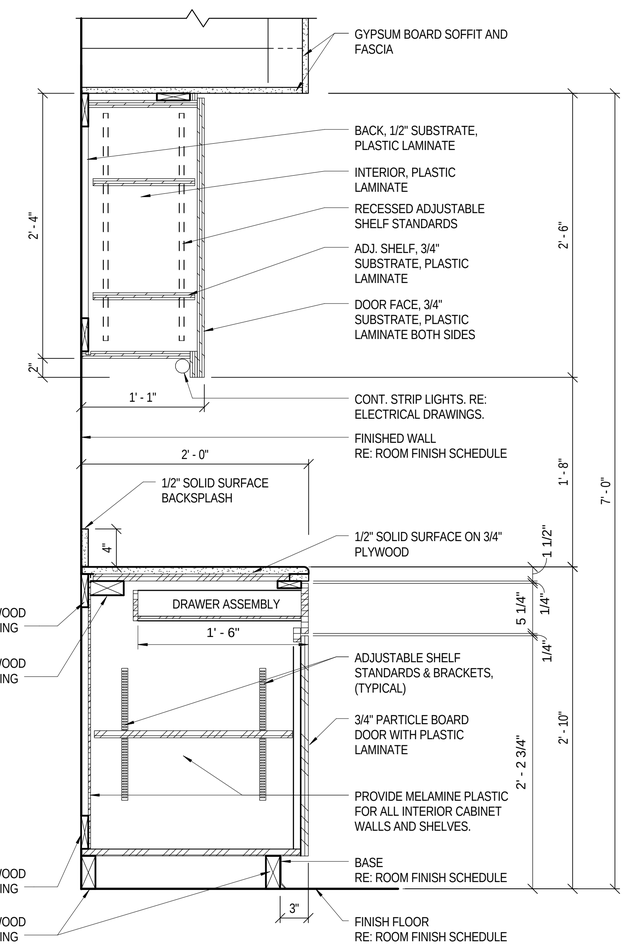

CASEWORK SECTION

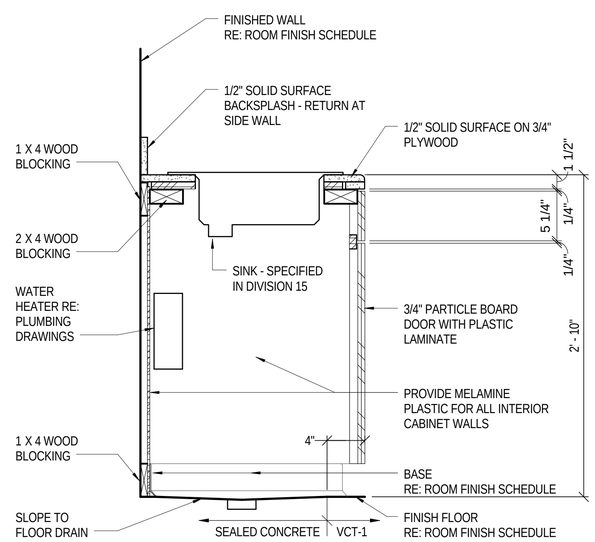

CASEWORK SECTION W/ SINK 3A A-731

0 1/2' 1' 1 1/2'

SCALE IN FEET

US ARMY CORPS OF ENGINEERS
OMAHA DISTRICT

SYM.	DATE	DESCRIPTION	APPR.	SYM.	DATE	DESCRIPTION	APPR.

DESIGNED BY: J.WIEDERHOLT
DWN BY: J.PICKA
CKD BY: -
SUBMITTED BY: -
FILE NAME: M#9A-731
DATE: APRIL 2016
SOLICITATION NO.: W912BF-16-B-0007
CONTRACT NO.: -
FILE NUMBER: AF212-220
SIZE: 34X22
PLOT SCALE: AS INDICATED
PLOT DATE: 4/22/16

U.S. ARMY ENGINEER DISTRICT
CORPS OF ENGINEERS
OMAHA, NEBRASKA

BURNS & McDONNELL
8201 NORMAN CENTER DR. #300
BLOOMINGTON, MN 55437
952-656-6003

FY15 P-341 CONSTRUCT ADDITION B1134
MINOT AFB, NORTH DAKOTA
PN: QJVF143101

INTERIOR ELEVATIONS AND CASEWORK DETAILS

SHEET IDENTIFICATION NUMBER
A-731

4/25/2016 8:41:21 AM
COPYRIGHT © 2016 BURNS & McDONNELL ENGINEERING COMPANY, INC.

FIRE ALARM / MASS NOTIFICATION LEGEND

BATT	SECONDARY POWER SUPPLY (BATTERY)
AMP	AMPLIFIER
FAA	REMOTE ANNUNCIATOR
FACP	FIRE ALARM CONTROL PANEL
F	MANUAL FIRE ALARM PULL STATION
FTR	FIRE ALARM TRANSMITTER/TRANSCEIVER
NAC	NOTIFICATION APPLIANCE CIRCUIT BOOSTER PANEL
	IN-DUCT PHOTOELECTRIC SMOKE DETECTOR
	FIRE ALARM STROBE A= AMBER LENS
AOM	ADDRESSABLE OUTPUT MODULE
AIM	ADDRESSABLE INPUT MODULE
	GROUND
MNS	MASS NOTIFICATION CONTROL PANEL
S	SPEAKER

SYMBOL IDENTIFICATION LEGEND

F	EXISTING DEVICE/ EQUIPMENT
F	NEW DEVICE/ EQUIPMENT
F	REMOVE/ RELOCATE EQUIPMENT

ABBREVIATIONS:

AC	ALTERNATING CURRENT
AFF	ABOVE FINISHED FLOOR
AHJ	AUTHORITY HAVING JURISDICTION
AWG	AMERICAN WIRE GAGE
CD	CANDELA
CIS	COMMON INTELLIGIBILITY SCALE
dBA	DECIBEL A-WEIGHTED
FA	FIRE ALARM
FX	FIRE SUPPRESSION
IAW	IN ACCORDANCE WITH
NAC	NOTIFICATION APPLIANCE CIRCUIT
NEC	NATIONAL ELECTRICAL CODE
NEMA	NATIONAL ELECTRICAL MANUFACTURERS ASSOCIATION
SLC	SIGNALING LINE CIRCUIT
TYP	TYPICAL
UL	UNDERWRITERS LABORATORIES
XP	EXPLOSION PROOF (AS REQUIRED BY DIV 26)

DETAIL/SECTION TITLE

SECTION, DETAIL OR ELEVATION IDENTIFICATION MARK

SECTION, DETAIL OR ELEVATION TITLE

PLATE NUMBER WHERE SECTION, DETAIL OR ELEVATION IS TAKEN

DETAIL CALLOUT SYMBOL

DETAIL NUMBER

PLATE NUMBER WHERE DETAIL IS DRAWN

SECTION CUT SYMBOL

SECTION LETTER

PLATE NUMBER WHERE SECTION IS DRAWN

VIEW SECTION

DESIGN CRITERIA:

1. AUDIBLE NOTIFICATION SHALL BE PROVIDED FOR ALL AREAS AND ROOMS THROUGHOUT THE FACILITY. THE FOLLOWING DESIGN CRITERIA SHALL BE ACCOMPLISHED WITH ALL DOORS, FIRE SHUTTERS, AND WINDOWS CLOSED. WHERE THIS DESIGN CRITERIA IS NOT ACCOMPLISHED DURING COMMISSIONING, PROVIDE ADDITIONAL DEVICES TO MEET THE MINIMUM DESIGN CRITERIA REQUIREMENTS AT NO ADDITIONAL COST. AS-BUILT DRAWINGS SHALL DEMONSTRATE THE ADDITIONAL DEVICES AND OR MODIFICATIONS TO THE INSTALLED DEVICES DO NOT EXCEED THE LIMITATIONS OF THE FACP OR NAC BOOSTER PANEL (INCLUSIVE OF SAFETY FACTORS).

2. A SPEAKER IS NOT REQUIRED IN EVERY ROOM, SPEAKER PERFORMANCE MUST ADHERE TO THE SOUND POWER CRITERIA WITHIN THE SPECIFICATIONS, CONTRACT DRAWINGS AND, NFPA 72.

3. THE SOUND POWER OF THE AUDIBLE NOTIFICATION SHALL BE A MINIMUM OF 70 DBA AND 15 DBA OVER THE AMBIENT CONDITIONS AT THE MOST REMOTE LOCATION WITHIN THE ROOM OR AREA. THE SOUND POWER SHALL BE MEASURED OFF THE TEMPORAL TONE PROCEEDING EACH VOICE MESSAGE. THE FOLLOWING CRITERIA SHALL BE UTILIZED FOR REVIEW AND APPROVAL OF SHOP DRAWINGS.

   A. THE SOUND POWER SHALL BE REDUCED BY 6 DBA EACH TIME THE DISTANCE BETWEEN THE APPLIANCE AND THE LISTENER IS DOUBLED. STARTING DISTANCE IS PER MANUFACTURER'S DATASHEET, TYPICALLY 10 FT.

   B. THE SOUND POWER SHALL BE REDUCED IN ACCORDANCE WITH THE MANUFACTURER'S DATASHEET FOR SOUND POWER DISTRIBUTION NOT PERPENDICULAR TO THE SPEAKER FACE. REFER TO MANUFACTURER'S TYPICAL SOUND OUTPUT DISTRIBUTION DIAGRAM.

   C. A MINIMUM 15 DBA LOSS SHALL BE ASSUMED THROUGH A STANDARD CLOSED DOOR.

4. INTELLIGIBILITY SHALL MEET THE FOLLOWING CRITERIA:

   A. NORMALLY UNOCCUPIED ROOMS SHALL BE CONSIDERED STORAGE ROOMS, MECHANICAL ROOMS, RISER ROOMS, ELECTRICAL ROOMS, JANITOR ROOMS, COMMUNICATION CLOSETS. ALL OTHER ROOMS SHALL BE CONSIDERED NORMALLY OCCUPIED.

   B. A CIS OF 0.80 SHALL BE ACHIEVED IN THROUGHOUT EACH ROOM AT 5 FT ABOVE THE FINISHED FLOOR.

   C. IN AREAS OF THE BUILDING PROVIDED WITH HARD WALL AND CEILING SURFACES (SUCH AS METAL OR CONCRETE) THAT ARE FOUND TO CAUSE EXCESSIVE SOUND REFLECTIONS MAY BE PERMITTED TO HAVE A CIS LESS THAN THE MINIMUM REQUIRED VALUE IF BUILDING OCCUPANTS IN THESE AREAS CAN DETERMINE THAT A VOICE SIGNAL IS BEING BROADCAST AND THEY MUST WALK NO MORE THAN 33FT TO FIND A LOCATION WITH AT LEAST THE MINIMUM REQUIRED CIS VALUE WITHIN THE SAME AREA.

   D. NORMALLY UNOCCUPIED AREAS OF THE BUILDING ARE PERMITTED TO HAVE A CIS LESS THAN THE MINIMUM REQUIRED VALUE IF PERSONNEL CAN DETERMINE THAT A VOICE SIGNAL IS BEING BROADCAST AND THEY MUST WALK NO MORE THAN 50 FT TO A LOCATION WITH AT LEAST THE MINIMUM REQUIRED CIS VALUE WITHIN THE SAME AREA.

5. EXTERIOR SPEAKERS SHALL MEET A MINIMUM OF 70 DBA AND 15 DBA OVER AVERAGE AMBIENT CONDITIONS, WITH A CIS SCORE OF 0.80 AT 16 FT FROM THE SPEAKER.

6. SPACING OF VISUAL NOTIFICATION APPLIANCES SHALL BE IN ACCORDANCE WITH NFPA 72. SPACING FOR DEVICES WITH COLORED LENSES SHALL COMPLY WITH DERATING FACTORS AS SPECIFIED BY THE MANUFACTURER.

GENERAL FIRE ALARM AND MASS NOTIFICATION NOTES:

1. THE FIRE ALARM/MASS NOTIFICATION DRAWINGS ARE SCHEMATIC IN NATURE AND SHOW A MINIMAL QUANTITY OF DEVICES. DETERMINE THE FINAL QUANTITY AND LOCATION OF ALL DEVICES IN ACCORDANCE WITH THE SPECIFICATIONS, CONTRACT DRAWINGS, AND MANUFACTURER'S WRITTEN RECOMMENDATIONS TO BE COMPLIANT WITH ALL APPLICABLE CODES AND STANDARDS. ADDITIONAL DEVICES SHALL BE PROVIDED FOR A FULLY FUNCTIONING FIRE ALARM SYSTEM AS REQUIRED BY NFPA 72, UFC 3-600-01, AND UFC 4-021-01.

2. ALL CONDUITS SHALL BE CONCEALED IN WALLS, FLOOR SLABS OR CEILINGS UNLESS OTHERWISE INDICATED. EXCEPTION: CONDUIT SHALL BE ALLOWED TO BE SURFACE MOUNTED ON WALLS AND CEILINGS IN UNFINISHED AREAS (E.G. MECHANICAL ROOM, ELECTRICAL ROOM, RISER ROOM). EXPOSED CONDUIT IS NOT ACCEPTABLE IN THE VACE VAULT (ROOM 118). WHERE CONDUIT FEEDS DEVICES NOT MOUNTED DIRECTLY ON THE WALL OR CEILING, THE CONDUIT SHALL BE ROUTED AS A SINGLE PENDENT TYPE DROP TO EACH DEVICE.

3. ALL EXPOSED FIRE ALARM CONDUITS AND JUNCTION BOXES IN UNFINISHED AREAS SHALL BE PRE-FINISHED RED FROM THE FACTORY. CONDUIT AND JUNCTION BOXES EXPOSED IN FINISHED AREAS SHALL BE FINISHED TO MATCH ADJACENT FINISHES.

4. CONDUIT SHALL BE SUPPORTED IN STRICT ACCORDANCE WITH THE NEC (E.G.10 FT INTERVALS AND 3 FT FROM TERMINATION). TENSION ONLY HANGERS ARE NOT PERMITTED (E.G. BATWINGS). TYPE OF CONDUIT UTILIZED SHALL BE IN ACCORDANCE WITH THE ELECTRICAL SPECIFICATIONS UNLESS OTHERWISE NOTED. FLEXIBLE CONDUIT IS ONLY PERMITTED FOR TERMINATION AT DEVICES MOUNTED ON PIPING OR SUBJECTED TO REMOVAL (E.G. FLOW SWITCHES, TAMPER SWITCHES, SPEAKERS AND STROBES MOUNTED IN REMOVABLE CEILINGS).

5. NAC CONDUCTOR SIZE SHALL NOT BE LESS THAN 14 AWG AND SLC CONDUCTOR SIZING SHALL NOT BE LESS THAN 18 AWG. ALL CONDUCTORS SHALL BE CONSISTENTLY COLOR COORDINATED THROUGH THE SYSTEM IN RELATION TO DEVICES THEY FEED (E.G. SLC - BLACK/RED, STROBE - YELLOW/BLUE). ADDRESSABLE SLC CIRCUITS SHALL BE PROVIDED WITH SHIELDED CONDUCTORS. SHIELDING SHALL BE GROUNDED AT ONE END OF THE CIRCUIT. ALL CIRCUITS SHALL BE PROVIDED WITH LABELING AT POINT OF TERMINATION.

6. CONDUCTORS SHALL BE RUN FROM DEVICE TO DEVICE WITHOUT SPLICES. WIRE NUTS SHALL BE PROHIBITED. TERMINAL STRIPS SHALL BE UTILIZED WHERE CONDUCTORS CANNOT BE DIRECTLY TERMINATED AT THE DEVICE (E.G. PIGTAILS OFF A HEAT DETECTOR).

7. FIRE ALARM EQUIPMENT PANELS SHALL NOT BE USED AS RACEWAY FOR ROUTING POWER WIRING OR LOW VOLTAGE WIRING. ONLY WIRING TERMINATING WITH THE PANEL SHALL BE ROUTED INTO THE PANEL. POWER WIRING AND POWER LIMITED WIRING SHALL BE SEPARATED BY A MINIMUM OF TWO INCHES WITHIN THE EQUIPMENT PANELS.

8. THE SUPPLY AND RETURN CLASS A CIRCUITS SHALL BE HORIZONTALLY SEPARATED BY 4 FT AND VERTICALLY SEPARATED BY 1 FT EXCEPT WHERE PERMITTED BY NFPA 72. CLASS A CIRCUITS SHALL NOT BE ROUTED IN THE SAME CHASE WHERE ROUTED BETWEEN FLOORS.

9. MOUNTING DEVICES IN THE FACP, NAC BOOSTER PANELS, AND TRANSCEIVER PANELS WHICH ARE NOT UL LISTED AS PART OF THE PANEL IS PROHIBITED.

10. WHERE FIRE ALARM DEVICES ARE LOCATED AT THE SAME LOCATION THEY MAY BE COMBINED INTO S SINGLE DEVICE.

11. CIRCUIT CLASSIFICATION FOR ALL NEW CIRCUITS SHALL MAINTAIN THE CIRCUIT CLASSIFICATION CURRENTLY INSTALLED.

12. A FULL SYSTEM TEST SHALL BE PERFORMED UPON COMPLETION OF THE FIRE ALARM / MASS NOTIFICATION. WITH THE EXCEPTION THAT THE AUDIBILITY CRITERIA WITHIN THE DESIGN DOCUMENTS IS ONLY APPLICABLE TO THE NEW CONSTRUCTION.

13. PORTIONS OF THIS SCOPE REQUIRE ACCESS TO SECURE FACILITIES. COORDINATE WITH BASE FOR ACCESS REQUIREMENTS.

14. WHERE DEVICES RATED FOR HAZARDOUS ENVIRONMENTS ARE REQUIRED OR INSTALLED, CIRCUITING AND CONDUIT SHALL BE INSTALLED IN ACCORDANCE WITH DIVISION 26 AND DIVISION 28.

US ARMY CORPS OF ENGINEERS
OMAHA DISTRICT

SYM.	DATE	DESCRIPTION	APPR.	SYM.	DATE	DESCRIPTION	APPR.

U.S. ARMY ENGINEER DISTRICT
CORPS OF ENGINEERS
OMAHA, NEBRASKA

BURNS & McDONNELL
8201 NORMAN CENTER DR. #300
BLOOMINGTON, MN 55437
952-656-6003

DESIGNED BY: J. DEW
DWN BY: HANKINS
CKD BY: C. CAHILL
SUBMITTED BY: -
FILE NAME: MIA8FA001
SIZE: 34X22
PLOT SCALE: AS INDICATED
DATE: APRIL 2016
SOLICITATION NO.: W912BF-18-B-0007
CONTRACT NO.: -
FILE NUMBER: AF212-220
PLOT DATE: 4/22/16

FY15P-341 CONSTRUCT ADDITION B1134
MINOT AFB, NORTH DAKOTA
PN: QJVF143101

FIRE ALARM SYMBOLS, LEGEND AND ABBREVIATIONS

SHEET IDENTIFICATION NUMBER
FA001

4/22/2016 11:28:08 AM
COPYRIGHT © 2016 BURNS & McDONNELL ENGINEERING COMPANY, INC.

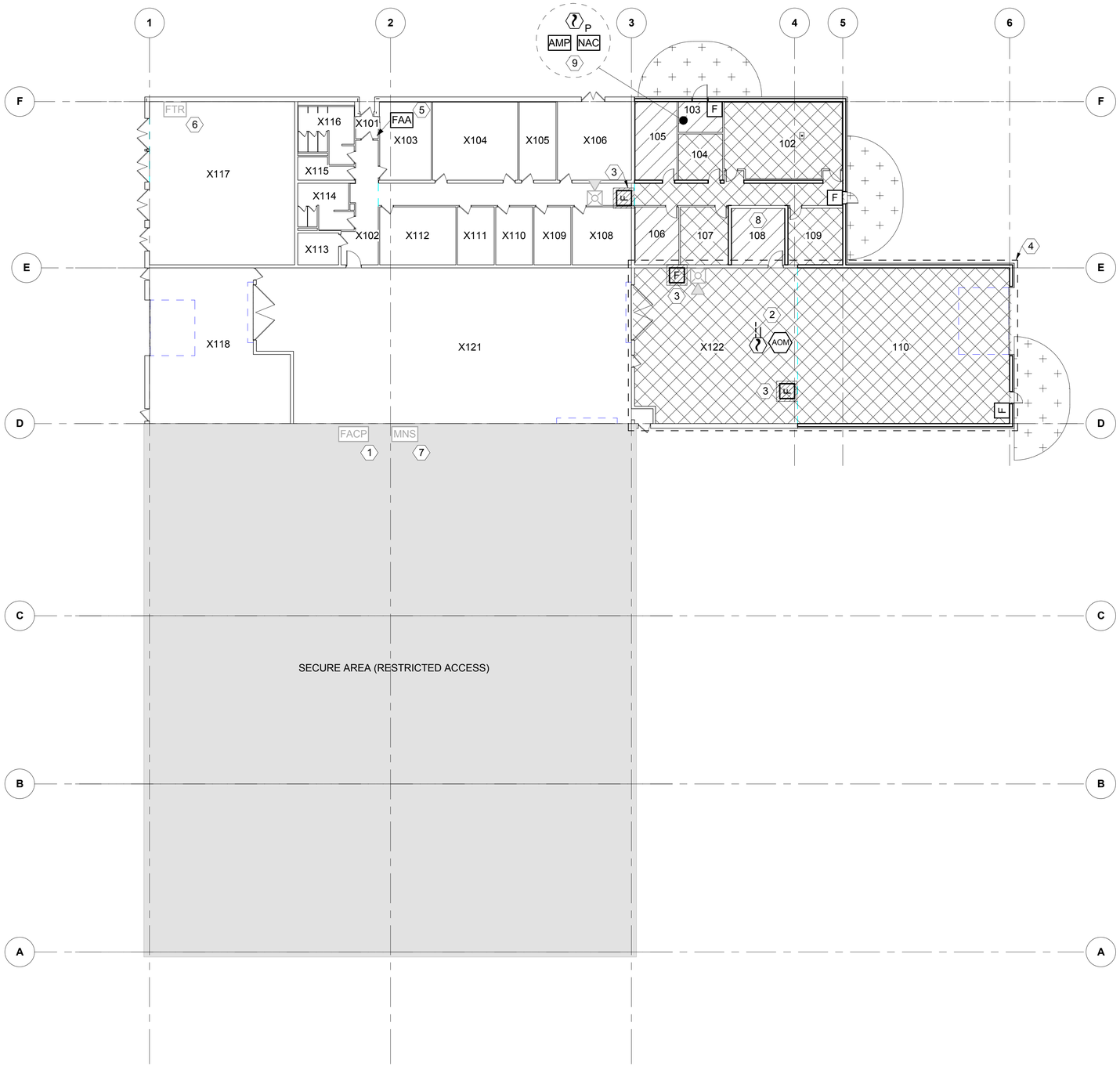

FIRE ALARM AND MASS NOTIFICATION PLAN LAYOUT 1 FA101

0 8' 16' 32'
SCALE IN FEET

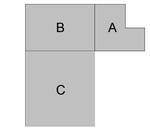

KEYPLAN

NOTES:

1. REFER TO FA001 FOR GENERAL NOTES, DESIGN CRITERIA, ABBREVIATIONS AND SYMBOLS.

KEYED NOTES:

1. EXISTING NOTIFIER NFS-320 FIRE ALARM CONTROL PANEL
2. PROVIDE ADDRESSABLE OUTPUT MODULE TO INTERFACE WITH THE ASSOCIATED AIR HANDLING EQUIPMENT.
3. REMOVE EXISTING PULL STATION AND UNUSED WIRING. REMOVE UNUSED CONDUIT AND REVISE CONDUIT LAYOUT AS NEEDED.
4. PROVIDE DEVICES RATED FOR HAZARDOUS ENVIRONMENTS. REFERENCE E-504 FOR REQUIRED RATINGS OF EACH DEVICE.
5. REMOVE EXISTING ANNUNCIATOR AND REPLACE WITH NEW FIRE ALARM REMOTE ANNUNCIATOR.
6. EXISTING MONACO M-SERIES TRANSCEIVER (TO REMAIN)
7. EXISTING WHELEN MASS NOTIFICATION PANEL (TO REMAIN).
8. PROVIDE SELF AMPLIFIED SPEAKERS IN ROOM 108. ACCESS TO ROOM 108 SHALL BE BY A SINGLE PENETRATION. COORDINATE WITH ELECTRICAL CONTRACTOR TO LOCATE PENETRATION POINT.
9. QUANTITY OF NAC AND AMP BY CONTRACTOR DESIGN TO MEET THE DESIGN CRITERIA.

NOT IN SCOPE (EXCEPT AS NOTED)

PROVIDE WALL MOUNTED SPEAKERS THROUGHOUT AREA TO ACHIEVE DESIGN CRITERIA.

PROVIDE WALL MOUNTED SPEAKERS AND STROBES THROUGHOUT AREA TO ACHIEVE DESIGN CRITERIA.

PROVIDE WEATHER PROOF SPEAKERS THROUGHOUT AREA TO ACHIEVE DESIGN CRITERIA.

US ARMY CORPS OF ENGINEERS
OMAHA DISTRICT

SYM.	DATE	DESCRIPTION	APPR.	SYM.	DATE	DESCRIPTION	APPR.

DESIGNED BY: J. DEW
DWN BY: HANKINS
CKD BY: C. CAHILL
SUBMITTED BY: -
DATE: APRIL 2016
SOLICITATION NO.: W9128F-16-B-0007
CONTRACT NO.: -
FILE NAME: MIA8FA101
FILE NUMBER: AF212-220
SIZE: 34X22
PLOT SCALE: AS INDICATED
PLOT DATE: 4/22/16

U.S. ARMY ENGINEER DISTRICT
CORPS OF ENGINEERS
OMAHA, NEBRASKA

BURNS & MCDONNELL
8201 NORMAN CENTER DR. #300
BLOOMINGTON, MN 55437
952-656-6003

FY15P-341 CONSTRUCT ADDITION B1134
MINOT AFB, NORTH DAKOTA
PN: QJVF143101

FIRE ALARM AND MASS NOTIFICATION PLAN LAYOUT

SHEET IDENTIFICATION NUMBER
FA101

4/22/2016 11:29:08 AM
COPYRIGHT © 2016 BURNS & McDONNELL ENGINEERING COMPANY, INC.

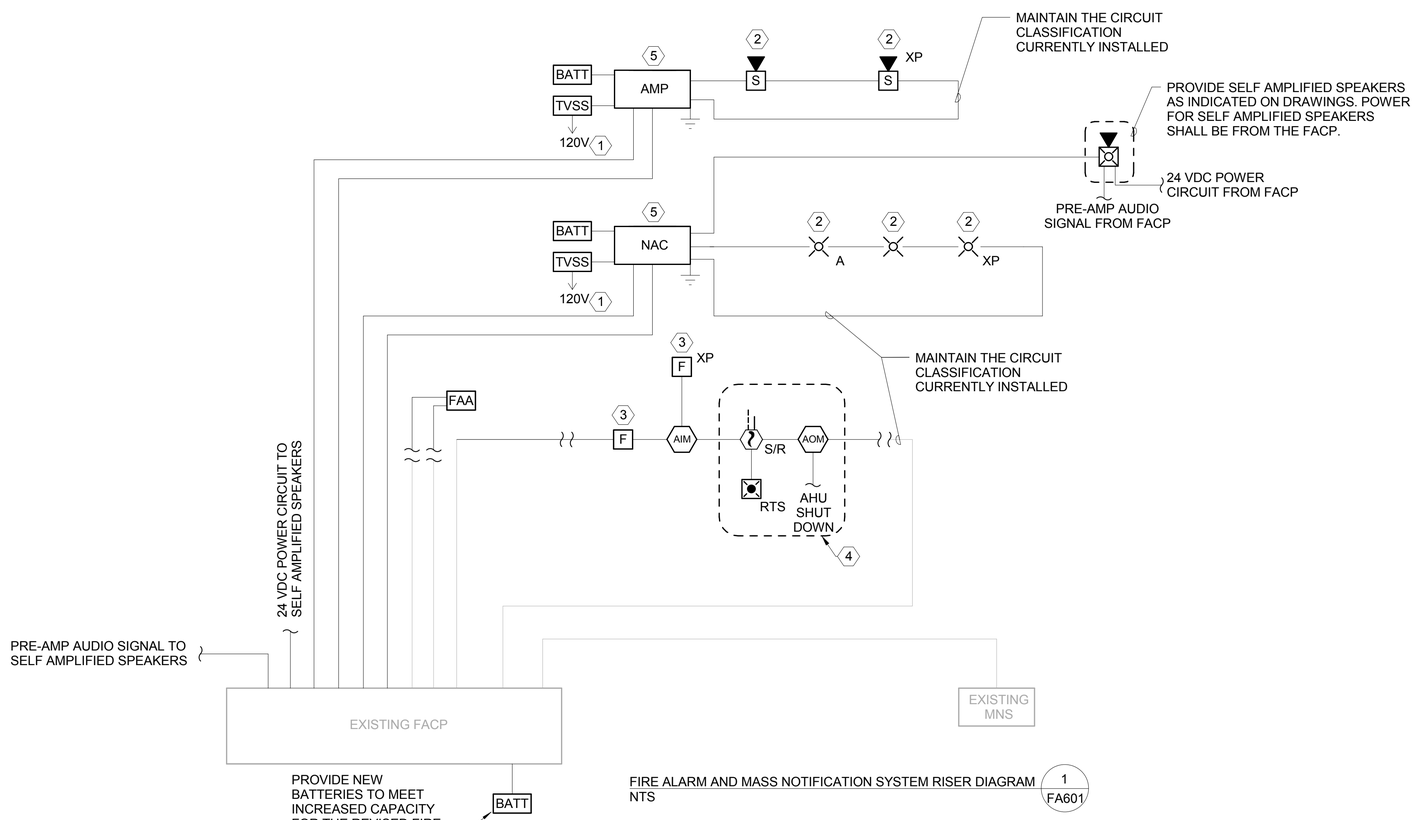

FIRE ALARM AND MASS NOTIFICATION SYSTEM RISER DIAGRAM 1 FA601
NTS

NOTES:

1. REFER TO FA101 FOR GENERAL NOTES, DESIGN CRITERIA, ABBREVIATIONS, AND SYMBOLS.
2. THE FIRE ALARM RISER SHOWS THE INTENT OF THE FIRE ALARM INFRASTRUCTURE. NOT ALL DEVICES ARE SHOWN. PROVIDE THE QUANTITY OF DEVICES AS REQUIRED TO COMPLY WITH NFPA 72, UFC 3-600-01, UFC 4-021-01 AND CONTRACT DOCUMENTS.
3. WHERE AN ADDRESSABLE INPUT MODULE IS UTILIZED, PROVIDE AN END-OF-LINE RESISTOR TO MONITOR THE INTEGRITY OF THE CLASS B CIRCUIT TO THE CONVENTIONAL DEVICE.

KEYED NOTES:

1. CIRCUIT BREAKER SHALL BE COLORED RED, LOCKABLE, AND LABELED FIRE ALARM
2. QUANTITY AND LOCATION BY CONTRACTOR'S DESIGN TO MEET DESIGN CRITERIA. WHERE THE LOCATION OF DEVICES WILL ALLOW FOR A COMBINATION DEVICE, SUCH A DEVICE MAY BE USED.
3. REFER TO FIRE ALARM PLANS FOR QUANTITY AND / OR LOCATIONS OF DEVICE(S).
4. PROVIDE SUPPLY SIDE DUCT SMOKE DETECTORS AND DIRECT SHUT DOWN FOR THE FOLLOWING UNITS:AHU-11. REFER TO MECHANICAL DRAWINGS FOR EXACT LOCATIONS OF EQUIPMENT.
5. PROVIDE NEW AMP AND NAC PANELS. WHERE EXISTING PANELS CAN SUPPORT ADDITIONAL DEVICES WITHOUT EXCEEDING 80% OF THE LISTED CAPACITY, THE EXISTING PANELS MAY BE USED. WHERE THE EXISTING PANELS ARE USED, PROVIDE ADDITIONAL BATTERIES TO SUPPORT THE INCREASED DEMAND.

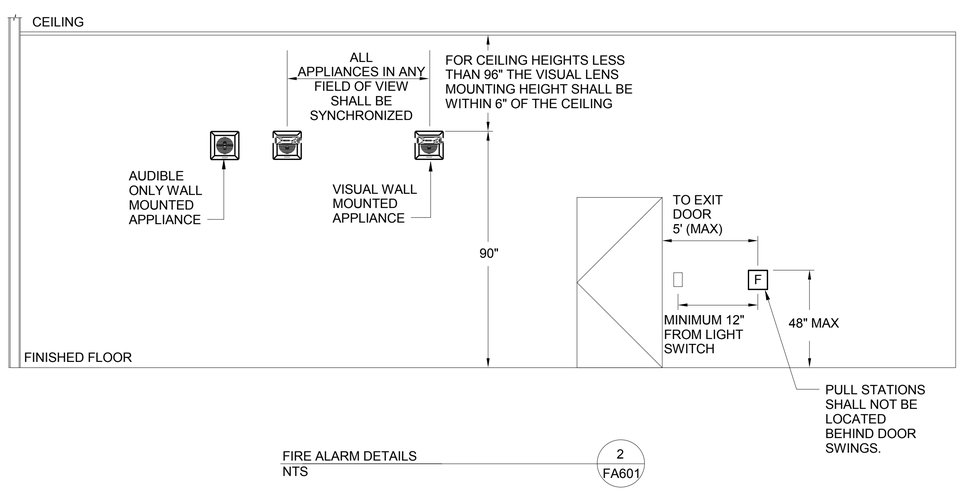

FIRE ALARM DETAILS 2 FA601
NTS

US ARMY CORPS OF ENGINEERS
OMAHA DISTRICT

SYM.	DATE	DESCRIPTION	APPR.	SYM.	DATE	DESCRIPTION	APPR.

DESIGNED BY: J. DEW
DWN BY: HANKINS
CKD BY: C.CAHILL
SUBMITTED BY: -
DATE: APRIL 2016
SOLICITATION NO.: W9128F-16-B-0007
CONTRACT NO.: -
FILE NAME: MIA8FA601
FILE NUMBER: AF212-220
SIZE: 34X22
PLOT SCALE: AS INDICATED
PLOT DATE: 4/22/16

U.S. ARMY ENGINEER DISTRICT
CORPS OF ENGINEERS
OMAHA, NEBRASKA

BURNS & MCDONNELL
8201 NORMAN CENTER DR. #300
BLOOMINGTON, MN 55437
952-656-6003

FY15P-341 CONSTRUCT ADDITION B1134
MINOT AFB, NORTH DAKOTA
PN: QJVF143101

FIRE ALARM RISER

SHEET IDENTIFICATION NUMBER
FA601

4/22/2016 11:29:08 AM
COPYRIGHT © 2016 BURNS & McDONNELL ENGINEERING COMPANY, INC.

FIRE ALARM CONTROL PANEL (FACP) FUNCTIONAL MATRIX

	ANNUNCIATION AT LOCAL PANEL		NOTIFICATION					AUXILIARY FUNCTION
THIS PROGRAMMING IS INTENDED TO SUPPLEMENT THE EXISTING FACP PROGRAMMING. DO NOT OVERWRITE THE EXISTING FACP PROGRAMMING. **ALARM CONDITIONS**	AUDIO-VISUAL FIRE ALARM INDICATION BY DEVICE	AUDIO-VISUAL SUPERVISORY INDICATION BY DEVICE	FIRE ALARM SIGNAL TO FIRE DEPARTMENT	COMMON SUPERVISORY CONDITION TO FIRE DEPARTMENT	FIRE ALARM AUDIBLE NOTIFICATION	FIRE ALARM VISUAL NOTIFICATION	DISABLE PUBLIC ADDRESS SYSTEM	SHUT-DOWN ASSOCIATED AIR HANDLING EQUIPMENT
MANUAL FIRE ALARM STATIONS	X		X		X	X	X	
SMOKE DETECTOR OVER AMPS AND NAC PANELS	X		X		X	X	X	
IN-DUCT SMOKE DETECTORS		X		X				X

US ARMY CORPS OF ENGINEERS
OMAHA DISTRICT

SYM.	DATE	DESCRIPTION	APPR.	SYM.	DATE	DESCRIPTION	APPR.

U.S. ARMY ENGINEER DISTRICT
CORPS OF ENGINEERS
OMAHA, NEBRASKA

BURNS & McDONNELL
8201 NORMAN CENTER DR. #300
BLOOMINGTON, MN 55437
952-656-6003

DESIGNED BY: J. LITSKY
DWN BY: HANKINS
CKD BY: C. CAHILL
SUBMITTED BY: -
DATE: APRIL 2016
SOLICITATION NO.: W9128F-16-B-0007
CONTRACT NO.: -
FILE NAME: MIA8FA602
FILE NUMBER: AF212-220
SIZE: 34X22
PLOT SCALE: AS INDICATED
PLOT DATE: 4/22/16

FY15P-341 CONSTRUCT ADDITION B1134
MINOT AFB, NORTH DAKOTA
PN: QJVF143101

FIRE ALARM MATRIX

SHEET IDENTIFICATION NUMBER
FA602

4/22/2016 11:29:09 AM
COPYRIGHT © 2016 BURNS & McDONNELL ENGINEERING COMPANY, INC.

FIRE SUPPRESSION LEGEND

- OUTSIDE SCREW AND YOKE VALVE (OS&Y)
- VALVE
- CHECKVALVE
- PIPE CAP
- REDUCER
- FIRE DEPARTMENT CONNECTION
- FLOW SWITCH
- RISER LOCATION

FIRE SUPPRESSION ABBREVIATIONS

AFF	ABOVE FINISHED FLOOR
AS	AUTOMATIC SPRINKLER
FP	FIRE PROTECTION
FM	FIRE MAIN
(M)	MECHANICALLY SUPERVISE
(S)	ELECTRICALLY SUPERVISED
SQ FT	SQUARE FOOT

DETAIL/SECTION TITLE

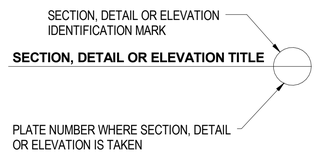

DETAIL CALLOUT SYMBOL

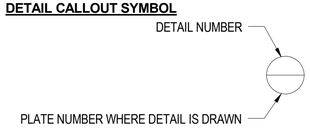

SECTION CUT SYMBOL

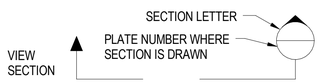

CONSTRUCTION INTERFACE

EXISTING TO REMAIN — NEW WORK

PIPING SYMBOLS

- EXISTING PIPING
- SYSTEM PIPING

SYMBOL IDENTIFICATION LEGEND

- EXISTING DEVICE/ EQUIPMENT
- NEW DEVICE/ EQUIPMENT

FIRE SUPPRESSION DESIGN CRITERIA

1. THE FIRE SUPPRESSION SYSTEM SHALL BE SERVED FROM AN EXISTING DEDICATED FIRE PUMP SYSTEM. PERFORM A FIRE PUMP TEST, AND INCORPORATE THIS TEST INTO THE HYDRAULIC CALCULATIONS. FIRE PUMP TESTING SHALL BE IN ACCORDANCE WITH NFPA 25, AND THE RESULTS OF THE TESTING SHALL BE SUBMITTED WITH SHOP DRAWINGS. COORDINATE WITH BASE FIRE MARSHAL PRIOR TO PERFORMING ANY PUMP TESTING.

FOR INFORMATION ONLY:

PUMP RATING:
PRESSURE 100 PSI
FLOW 2,500 GPM

2. HYDRAULIC CALCULATIONS SHALL INCLUDE A 10% OR 5 PSI SAFETY FACTOR, WHICHEVER IS GREATER.
3. PROTECTION SYSTEM MUST BE SPECIFICALLY UL LISTED / FM APPROVED FOR THEIR INTENDED USE.

FIRE SUPPRESSION GENERAL NOTES

1. PROVIDE ALL NECESSARY COMPONENTS TO EXTEND THE EXISTING WET-PIPE SYSTEM THROUGHOUT THE EXPANSION. AT A MINIMUM PROVIDE COMPONENTS AS INDICATED ON THESE DRAWINGS. PROVIDE ADDITIONAL COMPONENTS AND MODIFICATIONS AS REQUIRED TO PROVIDE A FULLY FUNCTIONING FIRE SUPPRESSION SYSTEM.
2. ALL SYSTEMS WHICH REQUIRE COORDINATION BETWEEN TRADES SHALL BE TO THE SATISFACTION OF THE CONTRACTING OFFICER, THE BASE FIRE MARSHAL. CORRECT ANY DEFICIENCIES, INCONSISTENCIES, OR POORLY COORDINATED INSTALLATIONS AT NO EXTRA COST TO THE GOVERNMENT.
3. FINAL DESIGN REQUIREMENTS (DEVICE QUANTITY, SIZE, AND LOCATIONS) ARE THE SOLE RESPONSIBILITY OF THE FIRE SUPPRESSION SUB-CONTRACTOR. DRAWINGS INDICATE MINIMUM REQUIREMENTS; ASSUME RESPONSIBILITY WILL BE RESPONSIBLE FOR VERIFYING AND COORDINATING FINAL DESIGN REQUIREMENTS WITH THESE CONSTRUCTION DOCUMENTS, SPECIFICATIONS, UFC 3-600-01, REFERENCE DOCUMENTS, APPLICABLE CODES, AND FACILITY USER REQUIREMENTS.
4. ALL DRAIN PENETRATIONS THRU EXTERIOR WALL SHALL BE NO GREATER THAN 2'-0" ABOVE FINISHED GRADE.
5. PORTIONS OF THIS SCOPE REQUIRE ACCESS TO SECURE FACILITIES. COORDINATE WITH BASE FOR ACCESS REQUIREMENTS.

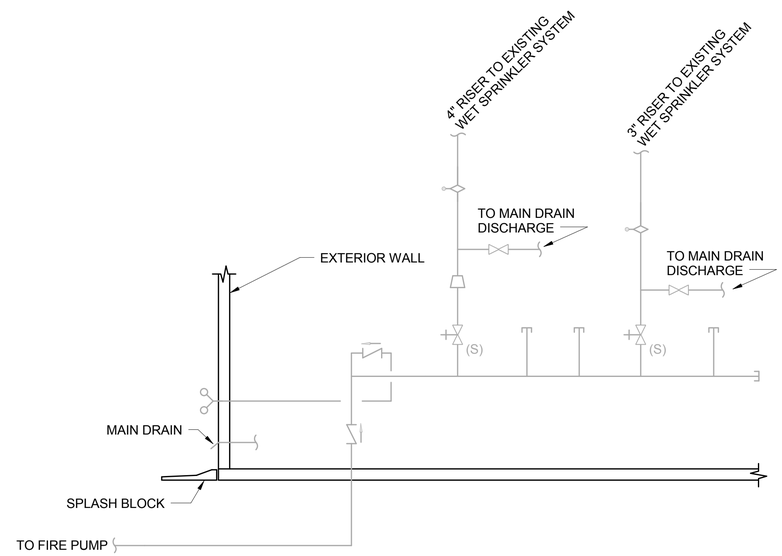

EXISTING FIRE SUPPRESSION RISER DETAIL (1 / FX001)
NTS

FIRE PROTECTION SPRINKLER SYSTEM DESIGN CRITERIA

MARK	HAZARD CLASSIFICATION	SYSTEM TYPE	DENSITY GPM/SF	REMOTE AREA SQ FT	MAXIMUM AREA PER HEAD SQ FT	HOSE DEMAND GPM	SPRINKLER CHARACTERISTICS		NOTES
							TEMP RATING	TYPE	
NO HATCH	NOT IN SCOPE (EXISTING)	N/A	N/A	N/A	N/A	N/A	N/A	N/A	
	LIGHT HAZARD (HC-1)	WET	.10	1500	225	250	ORDINARY	QUICK RESPONSE SEMI-RECESSED	1,2,3
	ORDINARY HAZARD GROUP II (HC-2)	WET	.20	2500	130	250	ORDINARY	QUICK RESPONSE UPRIGHTS	1,2,3

NOTE 1: PROVIDE 200 ºF RATED SPRINKLERS AS INDICATED ON DRAWINGS
NOTE 2: WHERE AREAS ARE OPEN TO THE EXISTING BUILDING UTILIZE SPRINKLERS TO MATCH EXISTING.
NOTE 3: HOSE DEMANDS ARE NOT INCLUDED IN SPRINKLER CALCULATIONS. HOSE DEMANDS ARE SERVED FROM A SEPARATE BASE SYSTEM.

US ARMY CORPS OF ENGINEERS
OMAHA DISTRICT

SYM.	DATE	DESCRIPTION	APPR.	SYM.	DATE	DESCRIPTION	APPR.

U.S. ARMY ENGINEER DISTRICT
CORPS OF ENGINEERS
OMAHA, NEBRASKA

BURNS & MCDONNELL
8201 NORMAN CENTER DR. #300
BLOOMINGTON, MN 55437
952-656-6003

DESIGNED BY: J. DEEPE
DRAWN BY: HANKINS
CKD BY: C. CAHILL
SUBMITTED BY: -
DATE: APRIL 2016
SOLICITATION NO.: W912BF-16-B-0007
CONTRACT NO.: -
FILE NUMBER: AF212-220
FILE NAME: MIA8FX001
PLOT SCALE: AS INDICATED
SIZE: 34X22
PLOT DATE: 4/22/16

FY15P-341 CONSTRUCT ADDITION B1134
MINOT AFB, NORTH DAKOTA
PN: QJVF143101

FIRE SUPPRESSION NOTES, LEGEND AND ABBREVIATIONS

SHEET IDENTIFICATION NUMBER
FX001

4/22/2016 11:29:10 AM
COPYRIGHT © 2016 BURNS & McDONNELL ENGINEERING COMPANY, INC.

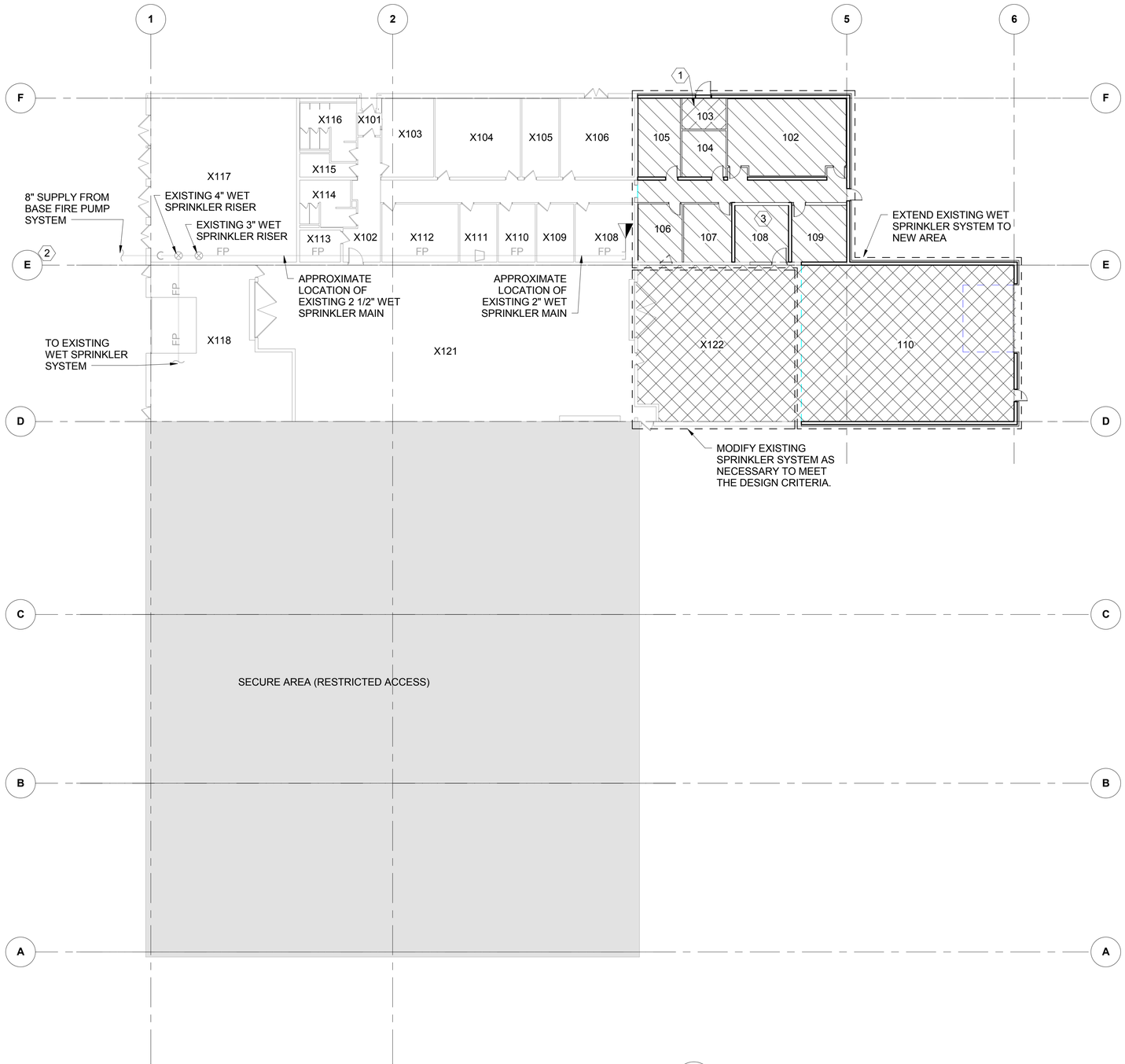

FIRE SUPPRESSION GROUND FLOOR PLAN 1 FX101

0 8' 16' 32'
SCALE IN FEET

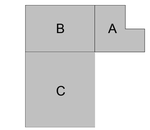

KEYPLAN

NOTES:

1. REFER TO FX001 FOR GENERAL NOTES, DESIGN CRITERIA, ABBREVIATIONS AND SYMBOLS.

KEYED NOTES:

1. PROVIDE 200 ºF SPRINKLER HEADS IN ROOM 103.
2. 360 FT OF 10" UNDERGROUND PIPE TO BASE FIRE PUMPS. PUMPS ARE SUPPLIED BY A 75,000 GALLON FIRE WATER TANK.
3. SPRINKLER PROTECTION IN ROOM 108 SHALL BE SERVED FROM A SINGLE PENETRATION. COORDINATE LOCATION OF PENETRATION WITH MECHANICAL CONTRACTOR.

HAZARD SCHEDULE

MARK	HAZARD CLASSIFICATION
NO HATCH	NOT IN SCOPE
	LIGHT HAZARD (FM HC-1)
	ORDINARY HAZARD II (FM HC-2)

US ARMY CORPS OF ENGINEERS
OMAHA DISTRICT

SYM.	DATE	DESCRIPTION	APPR.	SYM.	DATE	DESCRIPTION	APPR.

DESIGNED BY: J. DEW
DWN BY: HANKINS
CKD BY: C. CAHILL
SUBMITTED BY: -
FILE NAME: MIA8FX101
SIZE: 34X22
PLOT SCALE: AS INDICATED
DATE: APRIL 2016
SOLICITATION NO.: W9128F-16-B-0007
CONTRACT NO.: -
FILE NUMBER: AF212-220
PLOT DATE: 4/22/16

U.S. ARMY ENGINEER DISTRICT
CORPS OF ENGINEERS
OMAHA, NEBRASKA

BURNS & MCDONNELL
8201 NORMAN CENTER DR. #300
BLOOMINGTON, MN 55437
952-656-6003

FY15P-341 CONSTRUCT ADDITION B1134
MINOT AFB, NORTH DAKOTA
PN: QJVF143101

FIRE SUPPRESSION GROUND FLOOR PLAN

SHEET IDENTIFICATION NUMBER
FX101

4/22/2016 11:29:11 AM
COPYRIGHT © 2016 BURNS & McDONNELL ENGINEERING COMPANY, INC.

DETAIL/SECTION TITLE

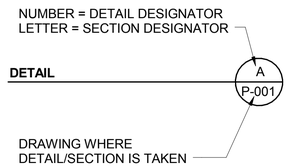

SECTION CUT SYMBOL

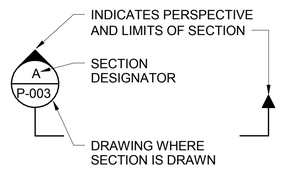

DETAIL/ENLARGED CALLOUT SYMBOL

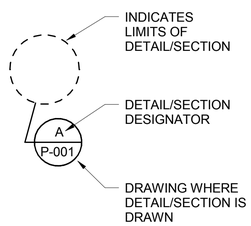

PIPE LINE DESIGNATIONS

?" V	VENT
?" DCW	DOMESTIC COLD WATER (DCW)
?" SAN	SANITARY SEWER (BELOW GRADE)
?" COND	CONDENSATE DRAIN
?" NG	NATURAL GAS
?" CA	COMPRESSED AIR
CO	CLEANOUT IN RISER
WCO	CLEANOUT IN WALL
FCO	CLEANOUT IN FLOOR

NOTE:
QUESTION MARKS (?) WILL BE REPLACED BY A PIPE SIZE ON DRAWINGS

CONSTRUCTION INTERFACE

DEMOLITION	
EXISTING	EXISTING
NEW	NEW
EXISTING	DEMOLITION

PLUMBING ABBREVIATIONS

AG	AIR GAP
AFF	ABOVE FINISHED FLOOR
ACCU	AIR COOLED CONDENSING UNIT
AHU	AIR HANDLING UNIT
BLVD	BEVELED
BLE	BEVELED LARGE END
BE	BEVEL END
BF	BLIND FLANGE
BOP	BOTTOM OF PIPE
BW	BUTT WELD
CA	COMPRESSED AIR
CPVC	CHLORINATED POLYVINYL CHLORIDE
CONC	CONCENTRIC
CRU	COMPUTER ROOM UNIT
DN	DOWN
D	DRAIN
DI	DUCTILE IRON
ELL	ELBOW
EXST	EXISTING
XH	EXTRA HEAVY
XS	EXTRA STRONG
FRP	FIBERGLASS REINFORCED PIPE
FW	FIELD WELD
FLGD	FLANGED
FCA	FLANGED COUPLING ADAPTER
FE	FLANGED END
FF	FLAT FACED
FOB	FLAT ON BOTTOM
FOT	FLAT ON TOP
FOV	FLOAT OPERATED VALVE
FD	FLOOR DRAIN
FI	FLOW INDICATOR
FM	FLOW METER
FS	FORGED STEEL
HD	HUB DRAIN
INV.EL.	INVERT ELEVATION
LC	LOCK CLOSED
LO	LOCK OPEN
LR	LONG RADIUS
MW	MANWAY
NPSH	NET POSITIVE SUCTION HEAD
NRS	NON-RISING STEM
NWL	NORMAL WATER LEVEL
PSIA	POUNDS PER SQUARE INCH ABSOLUTE
PSIG	POUNDS PER SQUARE INCH GAUGE
PVC	POLYVINYL CHLORIDE
RED	REDUCER-REDUCING
RCP	REMOTE COOLER PACKAGE
RS	RISING STEM
RLP	RUBBER LINED PIPE
SCH	SCHEDULE
SCRD	SCREWED
SR	SHORT RADIUS
SWG NIPP	SWAGED NIPPLE
TSE	THREAD SMALL END
TOC	TOP OF CONCRETE
TOP	TOP OF PIPE
TOG	TOP OF GRATING
TOS	TOP OF STEEL
TYP	TYPICAL
VTR	VENT THROUGH ROOF
VCP	VITRIFIED CLAY PIPE

GENERAL NOTES:

1. UNLESS NOTED OTHERWISE, THE CIVIL AND MECHANICAL INTERFACE POINT IS 5 FEET OUTSIDE OF THE BUILDING WALL.
2. COORDINATE ALL PIPE SLEEVE REQUIREMENTS WITH FOUNDATION SUBCONTRACTOR.
3. COORDINATE FLOOR DRAINS WITH ACTUAL EQUIPMENT LOCATIONS AND DRAINAGE REQUIREMENTS.
4. LEGEND IS GENERAL IN NATURE AND NOT ALL ITEMS SHOWN MAY BE USED ON THIS PROJECT.
5. INSTALL SANITARY PIPING WITH 2% SLOPE DOWNWARD IN DIRECTION OF FLOW. INSTALL VENT PIPING WITH 1% SLOPE DOWNWARD TOWARD FIXTURE OR STACK.
6. ALL FIXTURES SHALL HAVE A P-TRAP INSTALLED.
7. LOCATE WALL MOUNTED EQUIPMENT IN ACCORDANCE WITH ELECTRICAL CLASSIFICATION CLEARANCE REQUIREMENTS INDICATED ON E-504.
8. WHERE MANUFACTURER OR MODEL NUMBER IS PROVIDED, IT IS INTENDED TO CONVEY BASIS OF DESIGN. OTHER MANUFACTURERS OR MODELS MAY BE PROVIDED SUBJECT TO THE REQUIREMENTS OF THE APPLICABLE DRAWINGS AND SPECIFICATIONS.
9. ALL FLOOR DRAINS SHALL BE PROVIDED WITH A DEEP SEAL TRAP.
10. THE EXISTING CONDITIONS ON THESE DRAWINGS ARE TAKEN FROM THE BEST INFORMATION AVAILABLE BY SITE OBSERVATION. THE INFORMATION SHOWN IS TO HELP ESTABLISH THE EXTENT OF THE WORK TO BE DONE. THE CONTRACTOR SHALL FIELD VERIFY ALL ACTUAL CONDITIONS WITH THE INTENT OF THE WORK INDICATED ON THESE DRAWINGS.
11. PIPING SHALL BE ROUTE CONCEALED ABOVE CEILINGS. CONTRACTOR SHALL COORDINATE PIPING ABOVE CEILINGS WITH OTHER TRADES AND UTILITIES. IN AREAS WITH NO CEILING, ROUTE PIPING UNIFORMLY.
12. PROVIDE BALL VALVE TYPE ISOLATION VALVES WHERE ACCESSIBLE.
13. SLOPE GRAVITY AND PUMPED CONDENSATE PIPING A MINIMUM 1/8"/FT. IN DIRECTION OF FLOW. COORDINATE PIPING LOCATION AND ELEVATION WITH OTHER UTILITIES ABOVE CEILING TO MAINTAIN MINIMUM SLOPE REQUIREMENTS.

RISER DIAGRAM LEGEND

CO	CLEANOUT (CO) IN RISER
FCO	CLEANOUT (FCO) IN FLOOR
	VENT THRU ROOF (VTR)
	FLOOR OR WALL PENETRATION
	PLUMBING FIXTURE TRAP
	FLOOR DRAIN/EQUIPMENT DRAIN
	PRESSURE GAUGE
WHA-A	WATER HAMMER ARRESTOR - SPEC. TYPE
WCO	CLEANOUT (WCO) IN WALL
UP, W, N, S, E, DN	ISOMETRIC DIRECTION ARROW

PLUMBING SYMBOLS LEGEND

KS-1	SINK
EEWS-_	EMERGENCY EYEWASH - SPEC. TYPE
FD-_	FLOOR DRAIN - SPEC. TYPE - LINE SIZE
	PRESSURE/TEMPERATURE RELIEF VALVE
HB	HOSE BIBB
WH	WALL HYDRANT
	BALL VALVE

US ARMY CORPS OF ENGINEERS
OMAHA DISTRICT

SYM.	DATE	DESCRIPTION	APPR.	SYM.	DATE	DESCRIPTION	APPR.

U.S. ARMY ENGINEER DISTRICT
CORPS OF ENGINEERS
OMAHA, NEBRASKA

BURNS & McDONNELL
8201 NORMAN CENTER DR. #300
BLOOMINGTON, MN 55437
952-656-6003

DESIGNED BY: G.JOHNSON	DATE: APRIL 2016
DWN BY: G.JOHNSON	CKD BY: R.DARNELL
SOLICITATION NO.: W912BF-16-B-0007	
SUBMITTED BY: -	CONTRACT NO.: -
FILE NAME: MIA9P-001	FILE NUMBER: AF212-220
SIZE: 34X22	PLOT SCALE: AS INDICATED
PLOT DATE: 4/22/16	

FY15 P-341 CONSTRUCT ADDITION B1134
MINOT AFB, NORTH DAKOTA
PN: QJVF143101

PLUMBING GENERAL NOTES, SYMBOLS, AND ABBREVIATIONS

SHEET IDENTIFICATION NUMBER
P-001

4/22/2016 4:29:47 PM
COPYRIGHT © 2016 BURNS & McDONNELL ENGINEERING COMPANY, INC.

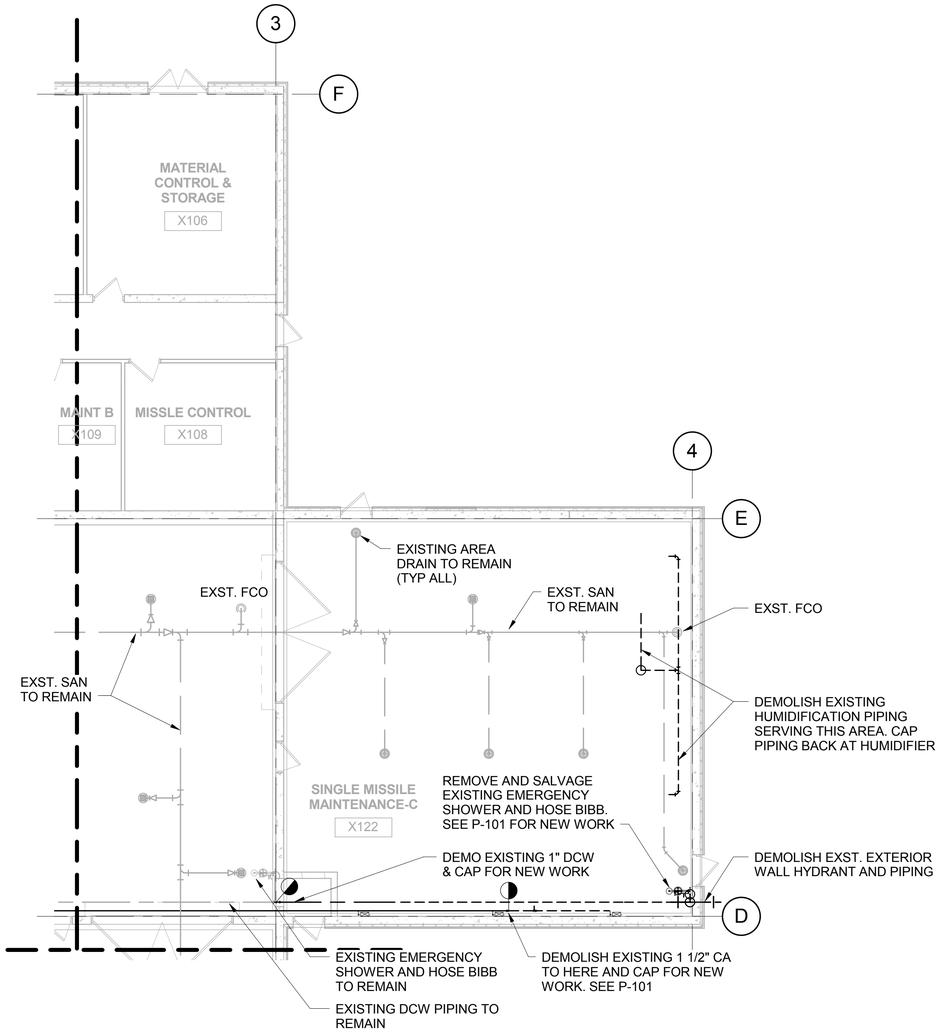

A2 DEMOLITION PLUMBING PLAN

PLAN NORTH

0 4' 8' 16'

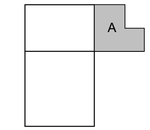

KEYPLAN

GENERAL NOTES:

1. FOR PLUMBING LEGEND, SYMBOLS AND ABBREVIATIONS, SEE SHEET P-001.

US ARMY CORPS OF ENGINEERS
OMAHA DISTRICT

SYM.	DATE	DESCRIPTION	APPR.	SYM.	DATE	DESCRIPTION	APPR.

U.S. ARMY ENGINEER DISTRICT
CORPS OF ENGINEERS
OMAHA, NEBRASKA

BURNS & McDONNELL
8201 NORMAN CENTER DR. #300
BLOOMINGTON, MN 55437
952-656-6003

DESIGNED BY: G.JOHNSON	DATE: APRIL 2016
DWN BY: G.JOHNSO	CKD BY: R.DARNELL
SUBMITTED BY: -	SOLICITATION NO.: W9128F-16-B-0007
	CONTRACT NO.: -
FILE NAME: MIA8PD101	FILE NUMBER: AP212-220
SIZE: 34X22	PLOT SCALE: AS INDICATED
	PLOT DATE: 4/22/16

FY15 P-341 CONSTRUCT ADDITION B1134
MINOT AFB, NORTH DAKOTA
PN: QJVF143101

DEMOLITION PLUMBING PLAN

SHEET IDENTIFICATION NUMBER
PD101

4/22/2016 4:29:53 PM
COPYRIGHT © 2016 BURNS & McDONNELL ENGINEERING COMPANY, INC.

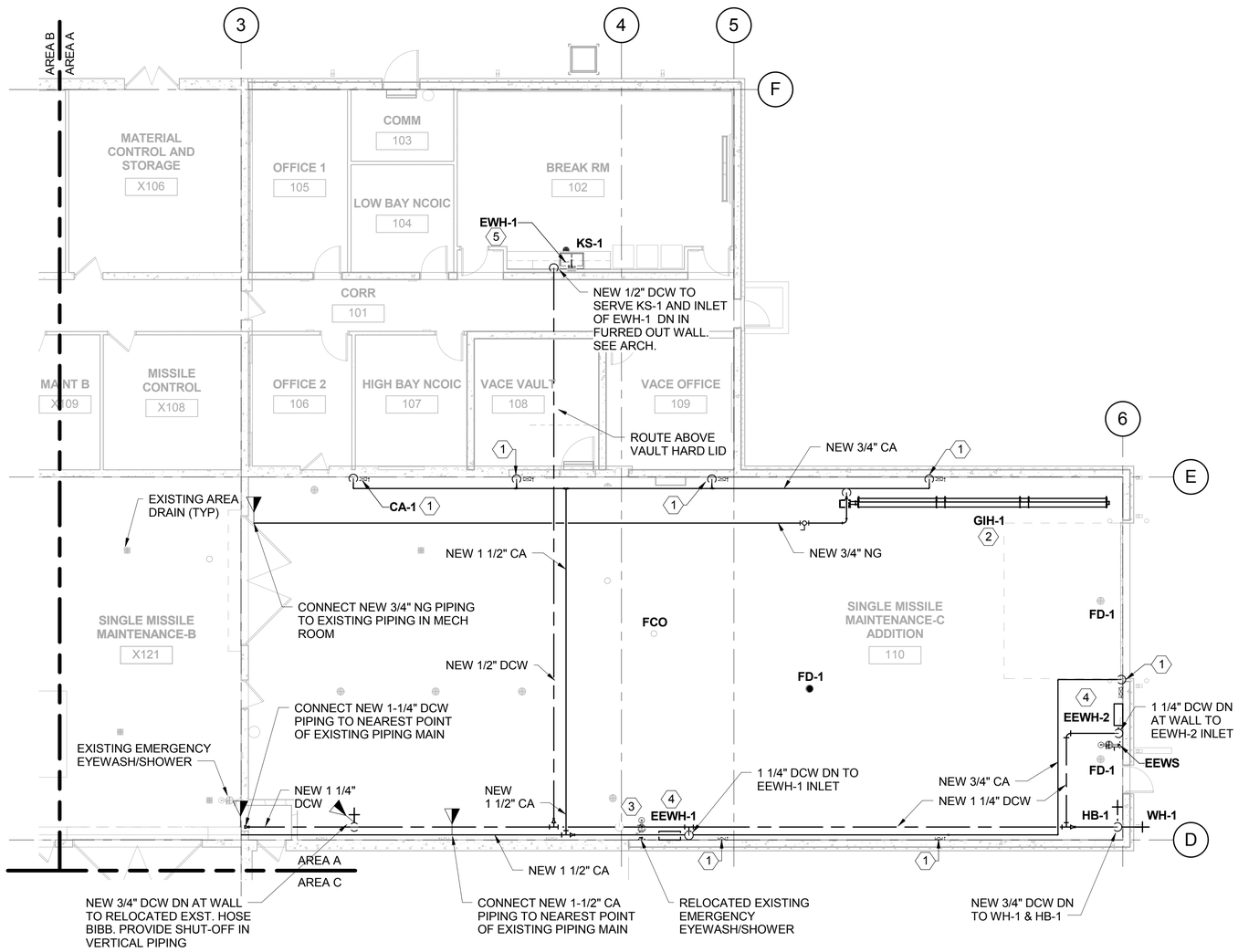

PLUMBING DOMESTIC WATER & GASES PLAN

A1

0 4' 8' 16'

PLAN NORTH

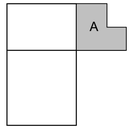

KEYPLAN

GENERAL NOTES:

1. FOR PLUMBING LEGEND, SYMBOLS AND ABBREVIATIONS, SEE SHEET P-001.

KEYED NOTES:

1. NEW 3/4" COMPRESSED AIR DROP (15 SCFM), 4'-0" AFF.
2. SEE DETAIL A4/P-500 FOR MORE INFORMATION.
3. PROVIDE NEW FLOW SWITCH ALARM SYSTEM COMPATIBLE WITH RELOCATED EXISTING EMERGENCY EYEWASH AND SHOWER ASSEMBLY.
4. MOUNT ELECTRIC EMERGENCY SHOWER WATER HEATER ON WALL, 6'-6" AFF (TO BOTTOM OF HEATER).
5. MOUNT ELECTRIC WATER HEATER BELOW COUNTER AT WALL, ABOVE DEDICATED FLOOR DRAIN. COORDINATE FINAL INSTALLATION WITH ARCHITECTURAL CASEWORK DETAILS ON A-731.

US ARMY CORPS OF ENGINEERS
OMAHA DISTRICT

SYM.	DATE	DESCRIPTION	SYM.	DATE	DESCRIPTION	APPR.

DESIGNED BY: G.JOHNSON | DATE: APRIL 2016
DWN BY: G.JOHNSON | CKD BY: G.JOHNSO | SOLICITATION NO.: W912BF-16-B-0007
SUBMITTED BY: - | CONTRACT NO.: -
FILE NAME: MIA8P-101 | FILE NUMBER: AF212-220
SIZE: 34X22 | PLOT SCALE: AS INDICATED | PLOT DATE: 4/22/16

U.S. ARMY ENGINEER DISTRICT
CORPS OF ENGINEERS
OMAHA, NEBRASKA

BURNS & McDONNELL
8201 NORMAN CENTER DR. #300
BLOOMINGTON, MN 55437
952-656-6003

FY15 P-341 CONSTRUCT ADDITION B1134
MINOT AFB, NORTH DAKOTA
PN: QJVF143101

PLUMBING DOMESTIC WATER & GASES PLAN

SHEET IDENTIFICATION NUMBER
P-101

4/22/2016 4:29:49 PM
COPYRIGHT © 2016 BURNS & McDONNELL ENGINEERING COMPANY, INC.

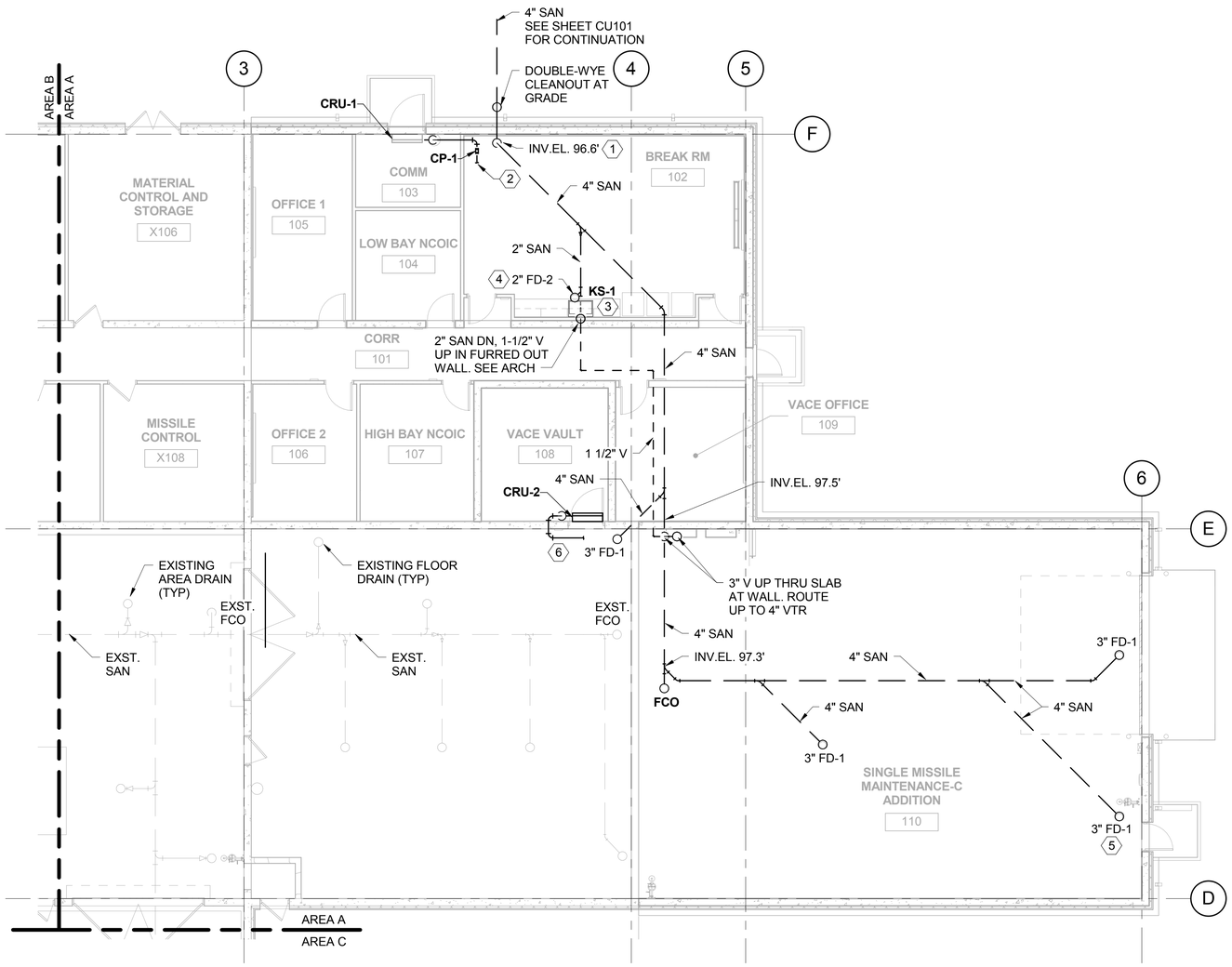

A1 PLUMBING WASTE & VENT PLAN

PLAN NORTH

0 4' 8' 16'

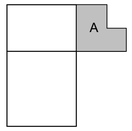

KEYPLAN

GENERAL NOTES:

1. FOR PLUMBING LEGEND, SYMBOLS AND ABBREVIATIONS, SEE SHEET P-001.
2. FINISHED FLOOR ELEVATION IS 100.0'.

KEYED NOTES:

1. DROP 4" SANITARY DN PRIOR TO FOUNDATION WALL. MAINTAIN MINIMUM 12" COVER BETWEEN TOP OF PIPE AND BOTTOM OF FOUNDATION WALL. INTERFACE WITH CIVIL 5'-0" OUTSIDE BUILDING AT REQUIRED ELEVATION. SEE CU101 FOR CONTINUATION.
2. ROUTE PUMPED CONDENSATE TO FLOOR DRAIN WITH FUNNEL BENEATH SINK, KS-1. CONTRACTOR RESPONSIBLE FOR COORDINATING FINAL PIPE ROUTING WITH OTHER UTILITIES ABOVE CEILING.
3. ROUTE CONDENSATE DRAINAGE FROM AHU-10 TO FLOOR DRAIN WITH FUNNEL BELOW KS-1. SEE MECHANICAL DRAWINGS FOR UNIT LOCATION ABOVE CEILING.
4. 2" FD WITH FUNNEL LOCATED BELOW COUNTER AT SINK, KS-1. SHOWN OFFSET FOR CLARITY ONLY. DRAIN SHALL SERVE EWH-1, AND CONDENSATE DRAINAGE FROM CP-1 AND AHU-10.
5. BEGINNING INVERT ELEVATION IS 98.0'.
6. ROUTE CONDENSATE DRAINAGE FROM CRU-2 TO FLOOR DRAIN.

US ARMY CORPS OF ENGINEERS
OMAHA DISTRICT

SYM.	DATE	DESCRIPTION	APPR.	SYM.	DATE	DESCRIPTION	APPR.

U.S. ARMY ENGINEER DISTRICT
CORPS OF ENGINEERS
OMAHA, NEBRASKA

BURNS & McDONNELL
8201 NORMAN CENTER DR. #300
BLOOMINGTON, MN 55437
952-656-6003

DESIGNED BY: G.JOHNSON	DATE: APRIL 2016
DWN BY: G.JOHNSON	CKD BY: R.DARNELL
SOLICITATION NO.: W912BF-16-B-0007	
SUBMITTED BY:	CONTRACT NO.: -
FILE NAME: MIA8P-110	FILE NUMBER: AF212-220
SIZE: 34X22	PLOT SCALE: AS INDICATED
PLOT DATE: 4/22/16	

FY15 P-341 CONSTRUCT ADDITION B1134
MINOT AFB, NORTH DAKOTA
PN: QJVF143101

PLUMBING WASTE & VENT PLAN

SHEET IDENTIFICATION NUMBER
P-110

4/22/2016 4:29:50 PM
COPYRIGHT © 2016 BURNS & McDONNELL ENGINEERING COMPANY, INC.

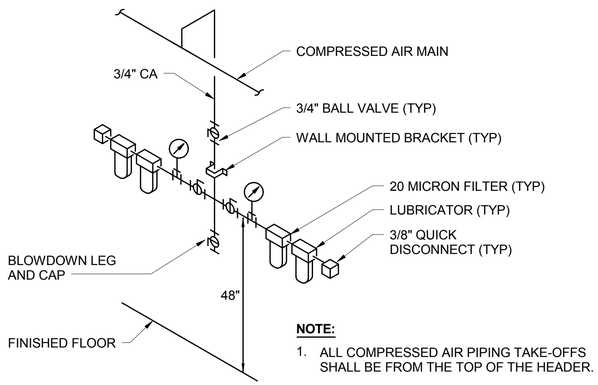

NOTE:

1. ALL COMPRESSED AIR PIPING TAKE-OFFS SHALL BE FROM THE TOP OF THE HEADER.

C1 COMPRESSED AIR SERVICE DROP

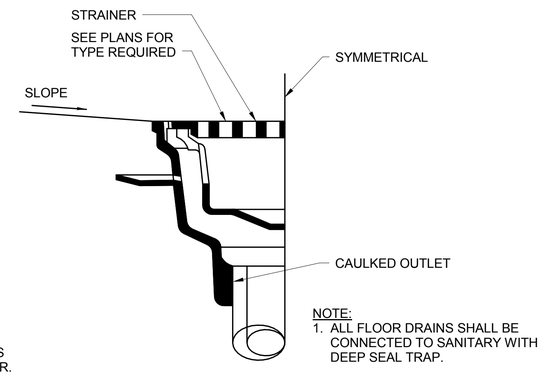

NOTE:

1. ALL FLOOR DRAINS SHALL BE CONNECTED TO SANITARY WITH DEEP SEAL TRAP.

C2 FLOOR DRAIN DETAIL

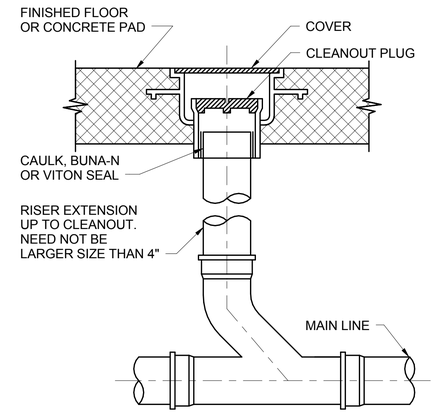

C4 FLOOR CLEANOUT DETAIL

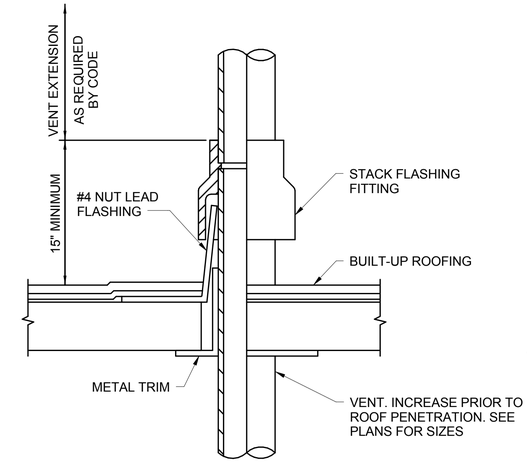

C5 PLUMBING VENT FLASHING

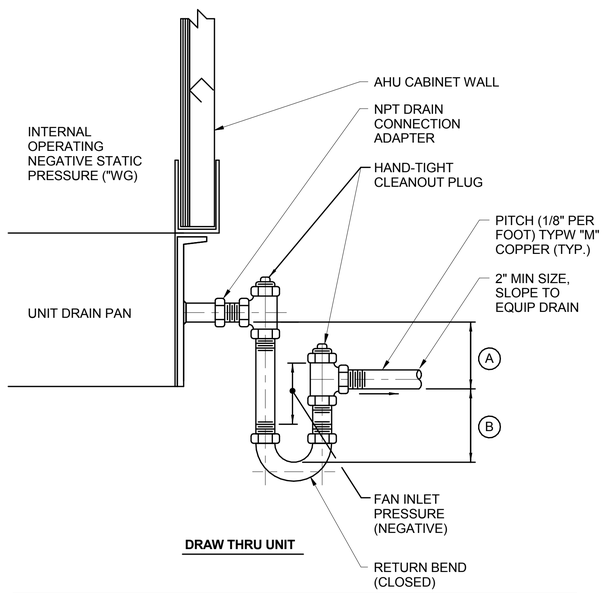

NOTES:

1. (A) DIMENSION EQUAL TO MAXIMUM FAN INLET PRESSURE (INCH WC) +1" (MIN.)
2. (B) DIMENSION EQUAL TO (A)/2 (MIN.)

A1 HVAC CONDENSATE TRAP DRAIN

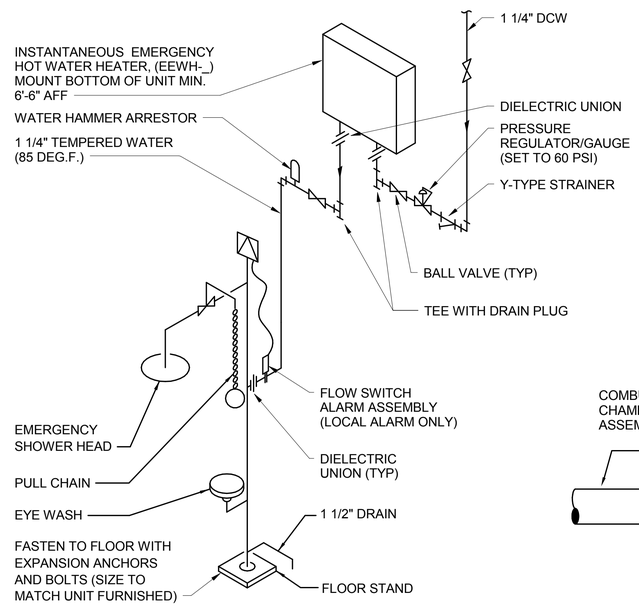

A2 EMERGENCY SHOWER/EYEWASH W/ INSTANTANEOUS WATER HEATER

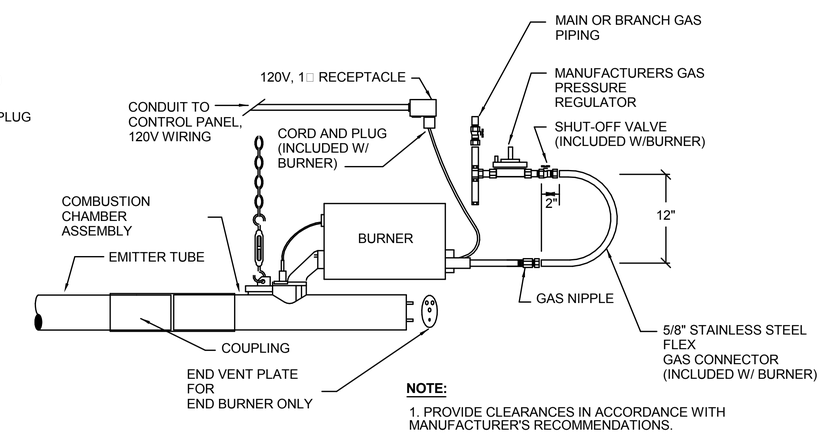

NOTE:

1. PROVIDE CLEARANCES IN ACCORDANCE WITH MANUFACTURER'S RECOMMENDATIONS.

A4 NATURAL GAS INFRARED HEATER CONNECTION DETAIL

US ARMY CORPS OF ENGINEERS
OMAHA DISTRICT

SYM.	DATE	DESCRIPTION	APPR.	SYM.	DATE	DESCRIPTION	APPR.

DESIGNED BY: D.JOHNSON | DATE: APRIL 2016
DRAWN BY: G.JOHNSO | CKD BY: R.DARNELL | CONSTRUCTION NO.: W9128F-16-B-0007
SUBMITTED BY: - | CONTRACT NO.: -
FILE NAME: MIA6P-500 | FILE NUMBER: AF212-220
SIZE: 34X22 | PLOT SCALE: AS INDICATED | PLOT DATE: 4/22/16

U.S. ARMY ENGINEER DISTRICT
CORPS OF ENGINEERS
OMAHA, NEBRASKA

BURNS & McDONNELL
8201 NORMAN CENTER DR. #300
BLOOMINGTON, MN 55437
952-656-6003

FY15 P-341 CONSTRUCT ADDITION B1134
MINOT AFB, NORTH DAKOTA
PN: QJVF143101

PLUMBING DETAILS

SHEET IDENTIFICATION NUMBER
P-500

4/22/2016 4:29:51 PM
COPYRIGHT © 2016 BURNS & McDONNELL ENGINEERING COMPANY, INC.

EMERGENCY ELECTRIC WATER HEATER SCHEDULE (EEWH)

TAG	LOCATION	TYPE	LVG. WATER TEMP (DEG. F.)	FUEL SOURCE	MINIMUM FLOW (GPM)	KW	VOLTS	PHASE	HERTZ	BASIS OF DESIGN MFR	BASIS OF DESIGN MODEL	REMARKS
EEWH-1	110	INSTANTANEOUS ELECTRIC	85	ELECTRIC	23	108	480	3	60	EEMAX	AP108480 EFD N4X	1
EEWH-2	110	INSTANTANEOUS ELECTRIC	85	ELECTRIC	23	108	480	3	60	EEMAX	AP108480 EFD N4X	1

NOTES:
1. WALL MOUNTED TO SERVE EMERGENCY EYE WASH/SHOWER UNITS. MUST MEET ANSI Z358.1 TEPID WATER REQUIREMENTS.
2. PROVIDE WITH MANUFACTURERS DISCONNECT.

ELECTRIC WATER HEATER SCHEDULE (EWH)

TAG	LOCATION	TYPE	LVG. WATER TEMP (DEG. F.)	FUEL SOURCE	CAPACITY (GAL.)	ELECTRICAL AMPS	ELECTRICAL VOLTS	ELECTRICAL PHASE	ELECTRICAL HERTZ	BASIS OF DESIGN MFR	BASIS OF DESIGN MODEL	REMARKS
EWH-1	102	POINT-OF-USE ELECTRIC	110	ELECTRIC	2.5	12	120	1	60	EEMAX	EMT2.5	1

NOTES:
1. WALL MOUNTED UNDER COUNTER WITH TOP INLET & OUTLET CONNECTIONS, TANK STATUS INDICATOR LIGHT, AND POWER PLUG.

FLOOR DRAIN SCHEDULE (FD)

TAG	BASIS OF DESIGN MFR	BASIS OF DESIGN MODEL	TYPE	STRAINER	NOTES
FD-1	JOSAM	32100-AE-TG	CAST IRON, TWO-PIECE BODY, INTEGRAL CLAMPING COLLAR	9" ROUND ADJUSTABLE., NICKEL BRONZE, HEAVY DUTY	1, 2, 3
FD-2	JR SMITH	3510Y	CAST IRON, INDRIECT WASTE DRAIN WITH FUNNEL	8" ROUND, ADJUSTABLE, 6" FUNNEL, NICKEL BRONZE STRAINER	1, 2, 3

NOTES:
1. SIZE AS INDICATED ON DRAWINGS.
2. PROVIDE DEEP SEAL TRAP WITH TRAPGUARD SEAL PROTECTION.
3. NEOPRENE GASKETED PUSH ON OUTLET.

CLEANOUT SCHEDULE (CO)

TAG	TYPE	COVER	BASIS OF DESIGN MFR	BASIS OF DESIGN MODEL	REMARKS
FCO	FLOOR	ROUND, NICKEL BRONZE, SCORIATED OR OPTIONAL TOPS FOR FINISHED AREAS	WADE	6000	1, 2

NOTES:
1. SIZE AS REQUIRED BY CODE.
2. CAST IRON, THREADED BRASS COUNTERSUNK PLUG, ADJUSTABLE HOUSING

PLUMBING FIXTURE SCHEDULE

SYMBOL	DESCRIPTION	TRIM	WATER CONSUMPTION	NOTES	CONNECTION SIZE (IN) DCW	CONNECTION SIZE (IN) DHW	CONNECTION SIZE (IN) WASTE	CONNECTION SIZE (IN) VENT
EEWS	DRENCH SHOWER & EYE/FACE WASH	STAINLESS STEEL BOWL & SHOWER HEAD, BOWL DUST COVER, FLOW SWITCH ALARM KIT	23 GPM	2	1 1/4	-	-	-
HB-1	INTERIOR COLD WATER HOSE BIBB	ANTI-SIPHON VACUUM BREAKER, FREEZEPROOF	5 GPM	1	3/4	-	-	-
KS-1	SINGLE BOWL, SELF-RIMMING	SWIVEL SPOUT, BLADE HANDLES, AERATOR	1.5 GPM	1	1/2	1/2	1 1/4	1 1/4
WH-1	EXTERIOR WALL HYDRANT	EXPOSED, FREEZEPROOF, WALL MOUNTED	--	1	3/4	-	-	-

NOTES:
1. FOR MOUNTING HEIGHTS, SEE ARCHITECTURAL ELEVATIONS.
2. SHALL BE COMPLIANT WITH ANSI Z358.1

US ARMY CORPS OF ENGINEERS
OMAHA DISTRICT

SYM.	DATE	DESCRIPTION	APPR.
SYM.	DATE	DESCRIPTION	APPR.

DESIGNED BY: G.JOHNSON
DWN BY: G.JOHNSON
CKD BY: G.JOHNSON
SUBMITTED BY: R.DARNELL
DATE: APRIL 2016
SOLICITATION NO.: W912BF-16-B-0007
CONTRACT NO.: -
FILE NAME: M48P-601
FILE NUMBER: AF212-220
SIZE: 34X22
PLOT SCALE: AS INDICATED
PLOT DATE: 4/22/16

U.S. ARMY ENGINEER DISTRICT
CORPS OF ENGINEERS
OMAHA, NEBRASKA

BURNS & McDONNELL
8201 NORMAN CENTER DR. #300
BLOOMINGTON, MN 55437
952-656-6003

FY15 P-341 CONSTRUCT ADDITION B1134
MINOT AFB, NORTH DAKOTA
PN: QJVF143101

PLUMBING SCHEDULES

SHEET IDENTIFICATION NUMBER
P-601

4/22/2016 4:29:52 PM
COPYRIGHT © 2016 BURNS & McDONNELL ENGINEERING COMPANY, INC.

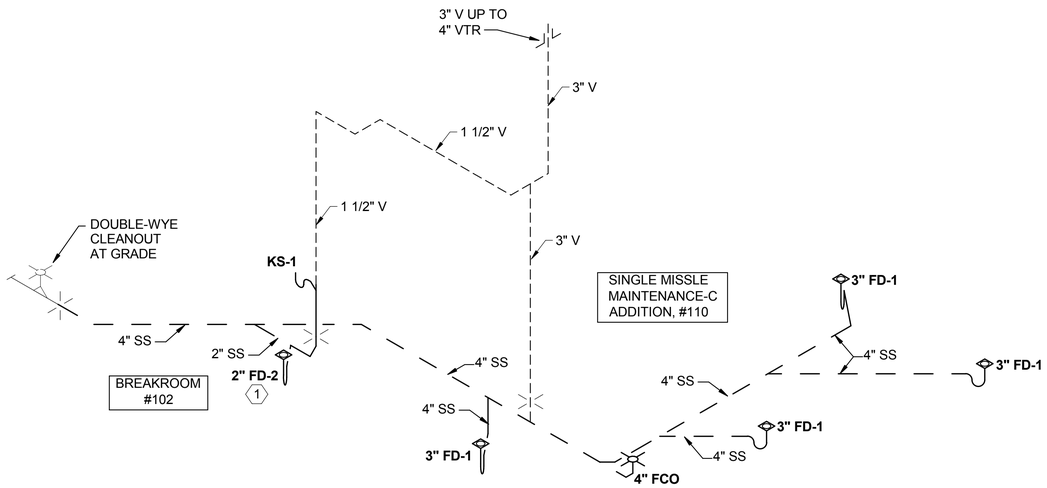

WASTE & VENT RISER DIAGRAM 1

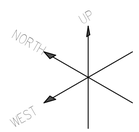

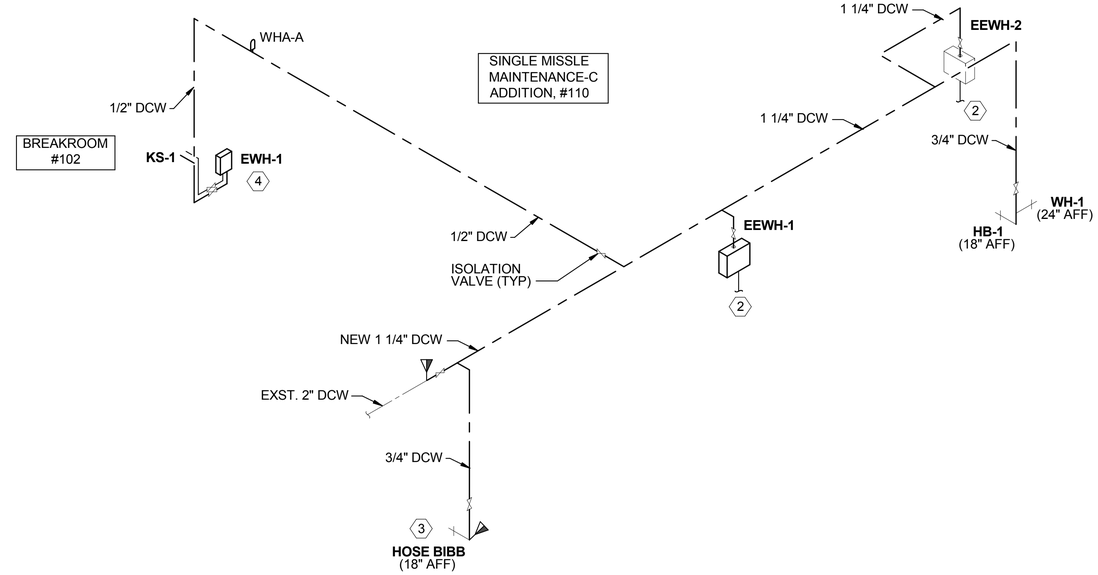

DOMESTIC WATER
RISER DIAGRAM 2

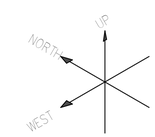

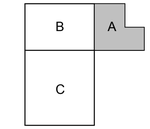

KEYPLAN

GENERAL NOTES:

1. FOR PLUMBING LEGEND, SYMBOLS AND ABBREVIATIONS, SEE SHEET P-001.

KEYED NOTES:

1. ROUTE PUMPED CONDENSATE TO FLOOR DRAIN WITH FUNNEL BENEATH SINK, KS-1. CONTRACTOR RESPONSIBLE FOR COORDINATING FINAL PIPE ROUTING WITH OTHER UTILITIES ABOVE CEILING.
2. ROUTE 1 1/4" TEPID WATER (85°F) FROM EEWH TO EMERGENCY SHOWER AND EYEWASH INLET CONNECTION.
3. CONNECT NEW 3/4" DCW TO RELOCATED EXISTING INTERIOR HOSE BIBB AT WALL.
4. ELECTRIC WATER HEATER BELOW COUNTER AT SINK.

US ARMY CORPS OF ENGINEERS
OMAHA DISTRICT

SYM.	DATE	DESCRIPTION	APPR.	SYM.	DATE	DESCRIPTION	APPR.

U.S. ARMY ENGINEER DISTRICT
CORPS OF ENGINEERS
OMAHA, NEBRASKA

BURNS & McDONNELL
8201 NORMAN CENTER DR. #300
BLOOMINGTON, MN 55437
952-656-6003

DESIGNED BY: B.PETERSON	DATE: APRIL 2016
DWN BY: G.JOHNSO	CKD BY: R.DARNELL
SOLICITATION NO.: W912BF-16-B-0007	
SUBMITTED BY: -	CONTRACT NO.: -
FILE NAME: MIA8P-701	FILE NUMBER: AF212-220
SIZE: 34X22	PLOT SCALE: AS INDICATED
	PLOT DATE: 4/22/16

FY15 P-341 CONSTRUCT ADDITION B1134
MINOT AFB, NORTH DAKOTA
PN: QJVF143101

PLUMBING RISER DIAGRAMS

SHEET IDENTIFICATION NUMBER
P-701

4/22/2016 4:29:53 PM
COPYRIGHT © 2016 BURNS & McDONNELL ENGINEERING COMPANY, INC.

PIPE LINE ABBREVIATIONS

HHWS	HEATING HOT WATER SUPPLY
HHWR	HEATING HOT WATER RETURN
RL	REFRIGERANT LIQUID
RS	REFRIGERANT SUCTION

HVAC LEGEND

- CONTROL DAMPER, MOTOR OPERATED
- MANUAL BALANCE DAMPER
- FLEXIBLE DUCT CONNECTION
- RECT. ELBOW W/TURNING VANES
- TEE W/TURNING VANES
- RECTANGULAR RADIUS ELBOW
- RISE IN RESPECT TO AIR-FLOW
- DROP IN RESPECT TO AIR-FLOW
- SQUARE OR RECTANGULAR TO ROUND TRANSITION
- SUPPLY OR OUTSIDE AIR DUCT SECTION
- RETURN OR EXHAUST AIR DUCT SECTION
- ROUND FLEXIBLE DUCT (5'-0" MAX LENGTH)
- SQUARE OR RECT. SUPPLY DIFFUSER
- RETURN AIR GRILLE
- EXHAUST AIR GRILLE
- THERMOSTAT
- MOTOR
- EMERGENCY SHUTOFF SWITCH
- MANUAL VOLUME DAMPER (SINGLE LINE)

MECHANICAL ABBREVIATIONS

24"x12"	RECTANGULAR DUCT DIMENSION (INCHES)
12"Ø	ROUND DUCT DIMENSION
ACCU	AIR COOLED CONDENSING UNIT
AFF	ABOVE FINISHED FLOOR
AHU	AIR HANDLING UNIT
AS	AIR SEPARATOR
BOD	BOTTOM OF DUCT
BOP	BOTTOM OF PIPE
CRU	COMPUTER ROOM UNIT
CV	CONTROL VALVE
DN	DOWN
DOAS	DEDICATED OUTSIDE AIR SYSTEM
DRG	DIFFUSER, REGISTER, GRILLE
EA	EXHAUST AIR
EF	EXHAUST FAN
EG	EXHAUST GRILLE
EL	ELEVATION
ELL	ELBOW
ER	EXHAUST REGISTER
EXST	EXISTING
FF	FLAT FACED
FOB	FLAT ON BOTTOM
FOT	FLAT ON TOP
GIH	GAS INFRARED HEATER
INV. EL.	INVERT ELEVATION
MA	MIXED AIR
NC	NORMALLY CLOSED (FAIL POSITION)
NG	NATURAL GAS
NO	NORMALLY OPEN (FAIL POSITION)
OA	OUTSIDE AIR
OB	OPPOSED BLADE
PB	PARALLEL BLADE
PSIA	POUNDS PER SQUARE INCH ABSOLUTE
PSIG	POUNDS PER SQUARE INCH GAUGE
RED	REDUCER-REDUCING
RA	RETURN AIR
RF	RETURN FAN
SCH	SCHEDULE
SA	SUPPLY AIR
SP	STATIC PRESSURE SENSOR
SR	SUPPLY REGISTER
TA	TRANSFER AIR
TOC	TOP OF CONCRETE
TOD	TOP OF DUCT
TOS	TOP OF STEEL
V	VENT
VAV	VARIABLE AIR VOLUME

GENERAL NOTES:

1. LEGEND IS GENERAL IN NATURE AND MAY INDICATE MORE INFORMATION THAN IS APPLICABLE TO PROJECT. SEE PLANS FOR SPECIFIC SYMBOLS AND ABBREVIATIONS.
2. PROVIDE ALL MATERIALS, VALVES, HANGERS, ETC. AND EQUIPMENT AND PERFORM ALL LABOR REQUIRED TO INSTALL COMPLETE AND OPERABLE MECHANICAL SYSTEMS AS INDICATED ON THE DRAWINGS, AS SPECIFIED, AND AS REQUIRED BY CODE.
3. INSTALL ALL MECHANICAL EQUIPMENT AND APPURTENANCES IN ACCORDANCE WITH MANUFACTURERS RECOMMENDATIONS, CONTRACT DOCUMENTS, AND APPLICABLE CODES AND REGULATIONS.
4. COORDINATE CONSTRUCTION OF ALL MECHANICAL WORK WITH ARCHITECTURAL, STRUCTURAL, CIVIL, ELECTRICAL WORK, ETC., SHOWN ON OTHER CONTRACT DOCUMENT DRAWINGS.
5. MAINTAIN A MINIMUM OF 6'-8" CLEARANCE TO UNDERSIDE OF DUCTS, PIPES, CONDUITS, ETC., THROUGHOUT ACCESS ROUTES AND IN MECHANICAL ROOMS, UNLESS NOTED OTHERWISE ON PLAN.
6. LOCATE ALL MECHANICAL EQUIPMENT FOR UNOBSTRUCTED ACCESS TO UNIT ACCESS PANELS, CONTROLS, AND VALVING.
7. VERIFY DIMENSIONS AND CONNECTION SIZE WITH FURNISHED EQUIPMENT.
8. ALL ELEVATIONS ARE ABOVE FINISHED FLOOR TO BOTTOM OF DUCT, EQUIPMENT PIPE, OR PIPE INSULATION UNLESS NOTED OTHERWISE. GRILLE & REGISTER ELEVATIONS ARE CENTERLINE
9. DUCT DIMENSIONS INDICATED REFER TO SHEET METAL DIMENSIONS. SHEET METAL SIZE SHALL BE AIR OPENING DIMENSION PLUS THE THICKNESS OF ACOUSTICAL LINER WHERE LINER IS INSTALLED. WHERE LINER IS NOT INSTALLED, AIR OPENING SIZE AND SHEET METAL SIZE SHALL BE THE SAME.
10. DUCT STATIC PRESSURE CLASSIFICATION: UNLESS OTHERWISE INDICATED, CONSTRUCT DUCTS ON THE DISCHARGE SIDE OF FANS AND HEAT PUMP TO HAVE 1.0 IN. W.C. POSITIVE PRESSURE AND DUCTS ON THE INLET SIDE OF EQUIPMENT TO HAVE 1.0 IN. W.C. NEGATIVE PRESSURE CLASSIFICATIONS. DUCTS ON OUTLET SIDE OF AHU'S SHALL HAVE 3.0 INCH POSITIVE PRESSURE CLASS DUCT.
11. LOCATE TRANSFER AIR DUCTS AND OPENINGS 12" ABOVE HIGHEST CEILING ELEVATION UNLESS OTHERWISE NOTED. CONTRACTOR TO COORDINATE OPENING WITH UTILITIES ABOVE CEILING.
12. COORDINATE ALL WALL, ROOF AND MEZZANINE FLOOR PENETRATIONS WITH STRUCTURAL AND ARCHITECTURAL PLANS.
13. INSTALL TEMPERATURE CONTROLS AT 54" ABOVE FINISHED FLOOR AND COORDINATE WITH OTHER DEVICES LOCATED ON WALLS. COORDINATE WITH ARCHITECTURAL WALL FINISHES.
14. STRUCTURAL EQUIPMENT PADS PROVIDED BY STRUCTURAL. SEE STRUCTURAL DRAWINGS AND DETAILS.
15. MOUNT ALL OVERHEAD MECHANICAL EQUIPMENT, AND FIXTURES, WEIGHING 31 POUNDS OR MORE TO SUPPORTS THAT SHALL RESIST FORCES OF 0.5 TIMES THE EQUIPMENT WEIGHT IN ANY HORIZONTAL DIRECTION AND 1.5 TIMES THE EQUIPMENT WEIGHT IN THE DOWNWARD DIRECTION.
16. ALL MECHANICAL OPENINGS IN MASONRY WALLS, LESS THAN 48", SHALL BE COORDINATED WITH STANDARD STRUCTURAL DRAWING DETAILS. ALL MECHANICAL OPENINGS LARGER THAN 48" SHALL BE LOCATED AS SHOWN ON STRUCTURAL ELEVATIONS AND COORDINATED WITH STRUCTURAL DETAILS.
17. REFER TO ARCHITECTURAL DRAWINGS FOR LOUVER INFORMATION.
18. LOCATE EQUIPMENT IN ACCORDANCE WITH ELECTRICAL CLASSIFICATION CLEARANCE REQUIREMENTS INDICATED ON E-504.
19. WHERE MANUFACTURER OR MODEL NUMBER IS PROVIDED, IT IS INTENDED TO CONVEY BASIS OF DESIGN. OTHER MANUFACTURERS OR MODELS MAY BE PROVIDED SUBJECT TO THE REQUIREMENTS OF THE APPLICABLE DRAWINGS AND SPECIFICATIONS.

AIR DISTRIBUTION DEVICE IDENTIFICATION

NECK SIZE (ROUND OR RECT.) — SYSTEM TYPE — SPEC. TYPE

8"Ø SA-A

175 CFM — AIRFLOW

DETAIL/SECTION TITLE

DETAIL DESIGNATOR

A1 **DETAIL**

SECTION CUT SYMBOL

INDICATES PERSPECTIVE AND LIMITS OF SECTION

SECTION DESIGNATOR

A1 / 1M-001

DRAWING WHERE SECTION IS DRAWN

DETAIL/SECTION CALLOUT SYMBOL

INDICATES LIMITS OF DETAIL/SECTION

DETAIL/SECTION DESIGNATOR

A1 / 1M-001

DRAWING WHERE DETAIL/SECTION IS DRAWN

PIPE LINE ACCESSORIES

- GATE VALVE
- OS&Y — OUTSIDE SCREW & YOKE
- BUTTERFLY VALVE
- CHECK VALVE
- 3 - WAY VALVE
- BALL VALVE
- PDV — PUMP DISCHARGE VALVE
- BALANCING VALVE
- RELIEF, SAFETY OR THERMAL RELIEF VALVE
- CONTROL VALVE
- M — MOTORIZED CONTROL VALVE
- SUCTION DIFFUSER
- AV — AUTOMATIC AIR VENT ASSEMBLY
- MV — MANUAL AIR VENT - SEE SPECIFICATIONS FOR APPROPRIATE VALVE TYPE.
- FLEX CONNECTION
- PUMP
- THERMOMETER
- BP — BACKFLOW PREVENTION ASSEMBLY
- SELF CONTAINED PRESSURE REDUCING (REGULATING) VALVE
- PRESSURE GAUGE
- Y-TYPE STRAINER
- REMOVABLE CAP
- REDUCER (CONCENTRIC)
- REDUCER (ECCENTRIC)
- UNION
- BLIND FLANGE
- TEST CONNECTION
- * COMPONENTS TO BE FURNISHED WITH EQUIPMENT
- M — METER

US ARMY CORPS OF ENGINEERS
OMAHA DISTRICT

SYM.	DATE	DESCRIPTION	SYM.	DATE	DESCRIPTION	APPR.

DESIGNED BY: D.WINSKOW | DATE: APRIL 2016
DWN BY: T.PETERSON | CKD BY: G.JOHNSON | SOLICITATION NO.: W912BF-16-B-0007
SUBMITTED BY: R.DARNELL | CONTRACT NO.: -
FILE NAME: M1A8M-001 | FILE NUMBER: A/F212-220
SIZE: 34X22 | PLOT SCALE: AS INDICATED | PLOT DATE: 4/22/16

U.S. ARMY ENGINEER DISTRICT
CORPS OF ENGINEERS
OMAHA, NEBRASKA

BURNS & McDONNELL
8201 NORMAN CENTER DR. #300
BLOOMINGTON, MN 55437
952-656-6003

FY15 P-341 CONSTRUCT ADDITION B1134
MINOT AFB, NORTH DAKOTA
PN: QJVF143101

MECHANICAL GENERAL NOTES, SYMBOLS, AND ABBREVIATIONS

SHEET IDENTIFICATION NUMBER
M-001

4/22/2016 4:11:51 PM
COPYRIGHT © 2016 BURNS & McDONNELL ENGINEERING COMPANY, INC.

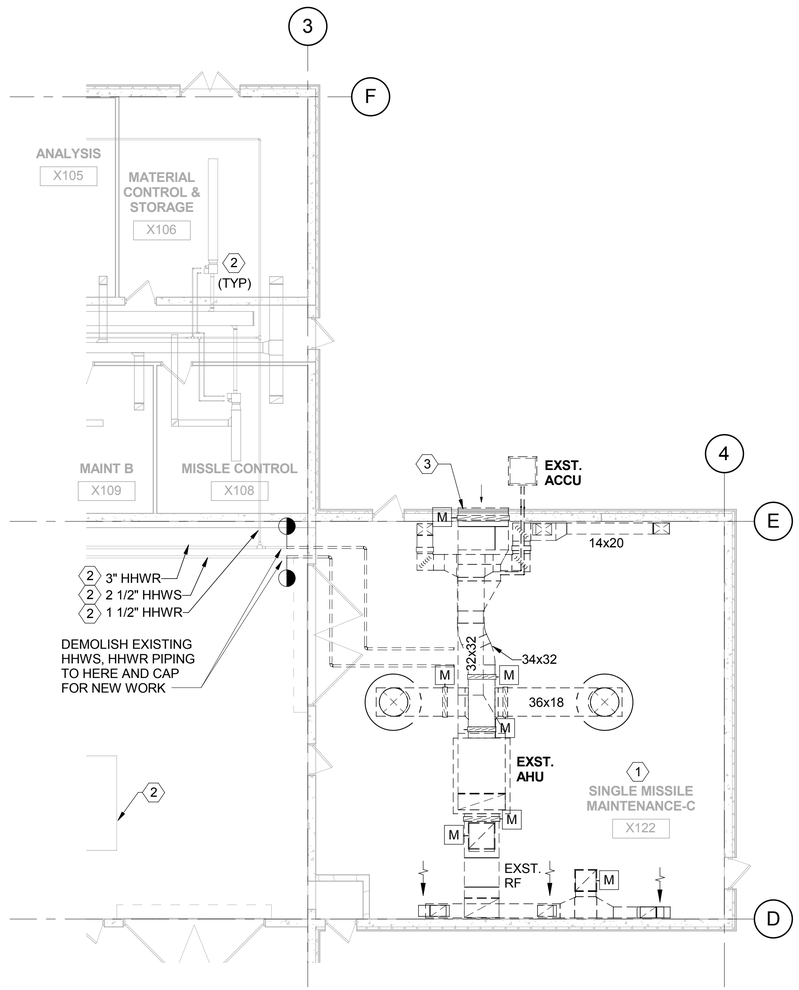

A1 DEMOLITION MECHANICAL PLAN

PLAN NORTH

0 4' 8' 16'

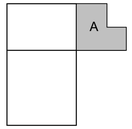

KEYPLAN

GENERAL NOTES:

1. FOR MECHANICAL LEGEND, SYMBOLS AND ABBREVIATIONS, SEE SHEET M-001.

KEYED NOTES:

1. DEMOLISH ALL HVAC EQUIPMENT, DUCTWORK, FITTINGS, ACCESSORIES AND CONTROLS SERVING EXISTING RM. X122.
2. EXISTING SYSTEMS TO REMAIN.
3. OPENING INFILL BY OTHERS. SEE ARCH DRAWING AD101.

US ARMY CORPS OF ENGINEERS
OMAHA DISTRICT

SYM.	DATE	DESCRIPTION	APPR.

SYM.	DATE	DESCRIPTION	APPR.

DESIGNED BY: G.JOHNSON
DWN BY: G.JOHNSON
CKD BY: G.JOHNSON
SUBMITTED BY: R.DARNELL
DATE: APRIL 2016
SOLICITATION NO.: W912BF-16-B-0007
CONTRACT NO.: -
FILE NAME: MI48MD101
FILE NUMBER: AF212-220
SIZE: 34X22
PLOT SCALE: AS INDICATED
PLOT DATE: 4/22/16

U.S. ARMY ENGINEER DISTRICT
CORPS OF ENGINEERS
OMAHA, NEBRASKA

BURNS & McDONNELL
8201 NORMAN CENTER DR. #300
BLOOMINGTON, MN 55437
952-656-6003

FY15 P-341 CONSTRUCT ADDITION B1134
MINOT AFB, NORTH DAKOTA
PN: QJVF143101

DEMOLITION MECHANICAL HVAC PLAN

SHEET IDENTIFICATION NUMBER
MD101

4/22/2016 4:12:02 PM
COPYRIGHT © 2016 BURNS & McDONNELL ENGINEERING COMPANY, INC.

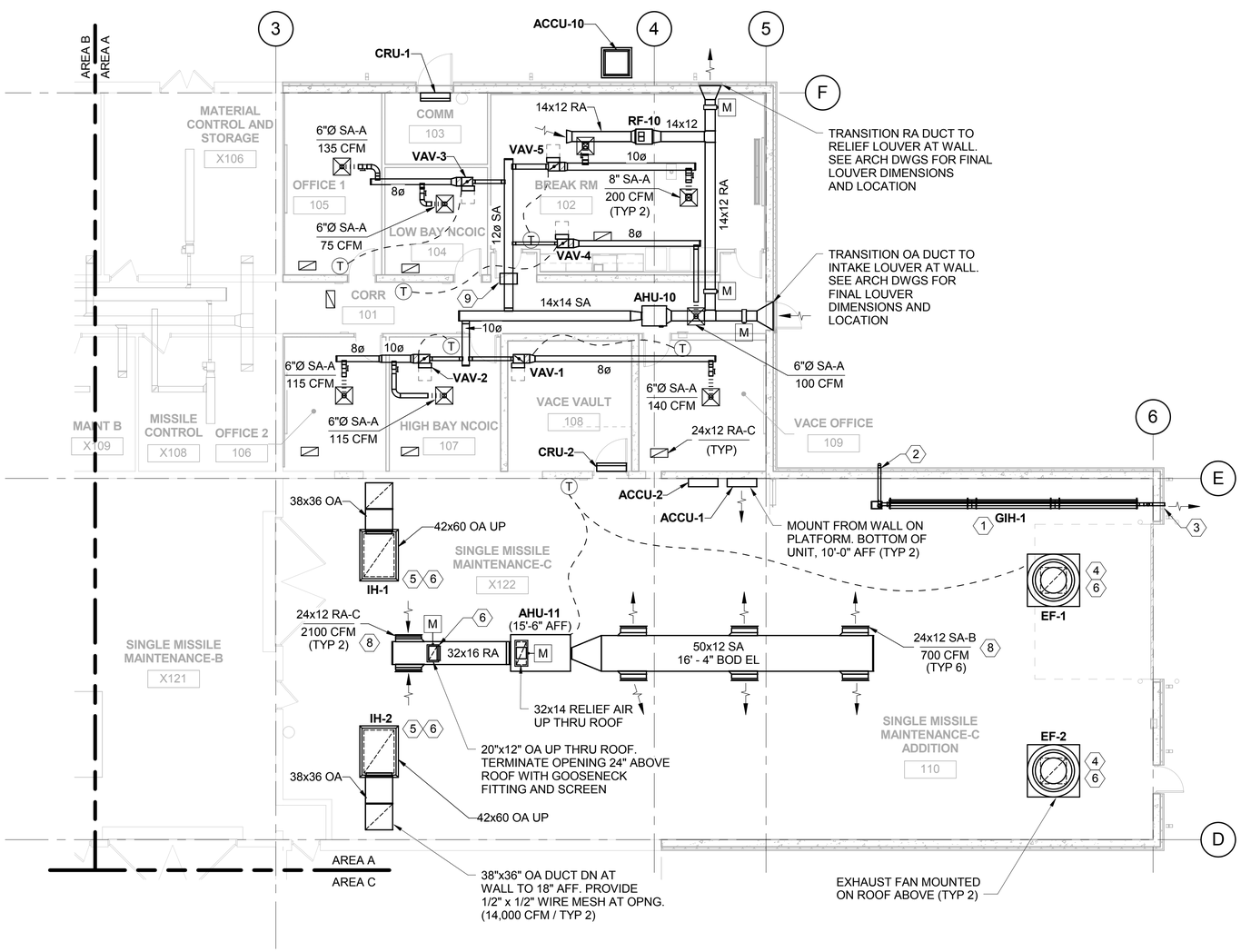

A1 MECHANICAL HVAC PLAN

PLAN NORTH

0 4' 8' 16'

GENERAL NOTES:

1. FOR MECHANICAL LEGEND, SYMBOLS & ABBREVIATIONS, SEE SHEET M-001.
2. COORDINATE ROUTING OF DUCT/PIPING WITH EXISTING STRUCTURE.
3. ALL CUTTING AND PATCHING BY MECHANICAL CONTRACTOR.
4. ALL DUCT PENETRATIONS THROUGH EXTERIOR WALLS GREATER THAN 96 SQUARE INCHES SHALL BE INSTALLED WITH SECURITY BARS. SEE DETAIL C3/M502.
5. CONNECT EQUIPMENT TO EXISTING EMERGENCY HVAC SHUTDOWN SWITCH LOCATED NEAR BUILDING ENTRANCE.
6. FINAL EQUIPMENT LOCATIONS SHALL MAINTAIN ALL REQUIRED ACCESS/MAINTENANCE CLEARANCES.

KEYED NOTES:

1. MOUNT INFRARED HEATER AT 14'-0" AFF. SEE PLUMBING PLANS FOR NATURAL GAS CONNECTION, SEE DETAIL A1/M-504 FOR MORE INFORMATION.
2. 4" COMBUSTION AIR INTAKE THRU WALL. TERMINATE WITH ELBOW DOWN & SCREEN. INTAKE DUCTWORK SHALL BE EXTERNALLY INSULATED.
3. 4" FLUE VENT THRU WALL. TERMINATE WITH CODE APPROVED VENT CAP.
4. EXHAUST FAN MOUNTED ON ROOF ABOVE, SEE DETAIL A4/M-504 FOR MORE INFORMATION.
5. INTAKE HOOD MOUNTED ON ROOF ABOVE.
6. PROVIDE MANBARS IN DUCT AT ROOF PENETRATION, WITH ACCESS DOOR IN DUCT BELOW FOR MAN BAR INSPECTION.
7. EXISTING AT/FP EMERGENCY SHUTOFF SWITCH (ESS) LOCATION SHOWN FOR REFERENCE ON A4/M-101 BELOW.
8. PROVIDE GRILLE WITH MANUFACTURERS OPPOSED BLADE DAMPER.
9. PROVIDE A 24"x24" OPENING THROUGH THE CORRIDOR WALL TO ALLOW RETURN AIRFLOW. THE 12"Ø SA DUCT SHALL BE THROUGH THE 24"x24" OPENING.

KEYPLAN

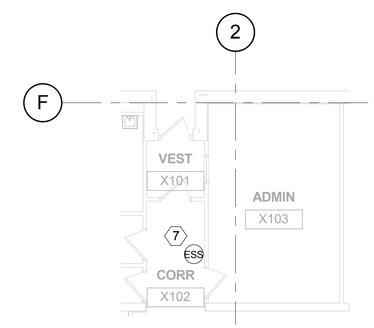

A4 ATFP ESS LOCATION

PLAN NORTH

0 4' 8' 16'

US ARMY CORPS OF ENGINEERS
OMAHA DISTRICT

SYM.	DATE	DESCRIPTION	SYM.	DATE	DESCRIPTION	APPR.

DESIGNED BY: C.JOHNSON
DWN BY: G.JOHNSO
CKD BY: R.DARNELL
SUBMITTED BY: -
DATE: APRIL 2016
SOLICITATION NO.: W91128F-16-B-0007
CONTRACT NO.: -
FILE NUMBER: AF212-220
FILE NAME: MIA8M-101
PLOT SCALE: AS INDICATED
PLOT DATE: 4/22/16
SIZE: 34X22

U.S. ARMY ENGINEER DISTRICT
CORPS OF ENGINEERS
OMAHA, NEBRASKA

BURNS & McDONNELL
8201 NORMAN CENTER DR. #300
BLOOMINGTON, MN 55437
952-656-6003

FY15 P-341 CONSTRUCT ADDITION B1134
MINOT AFB, NORTH DAKOTA
PN: GJVF143101

MECHANICAL HVAC PLAN

SHEET IDENTIFICATION NUMBER
M-101

4/22/2016 4:11:51 PM
COPYRIGHT © 2016 BURNS & McDONNELL ENGINEERING COMPANY, INC.

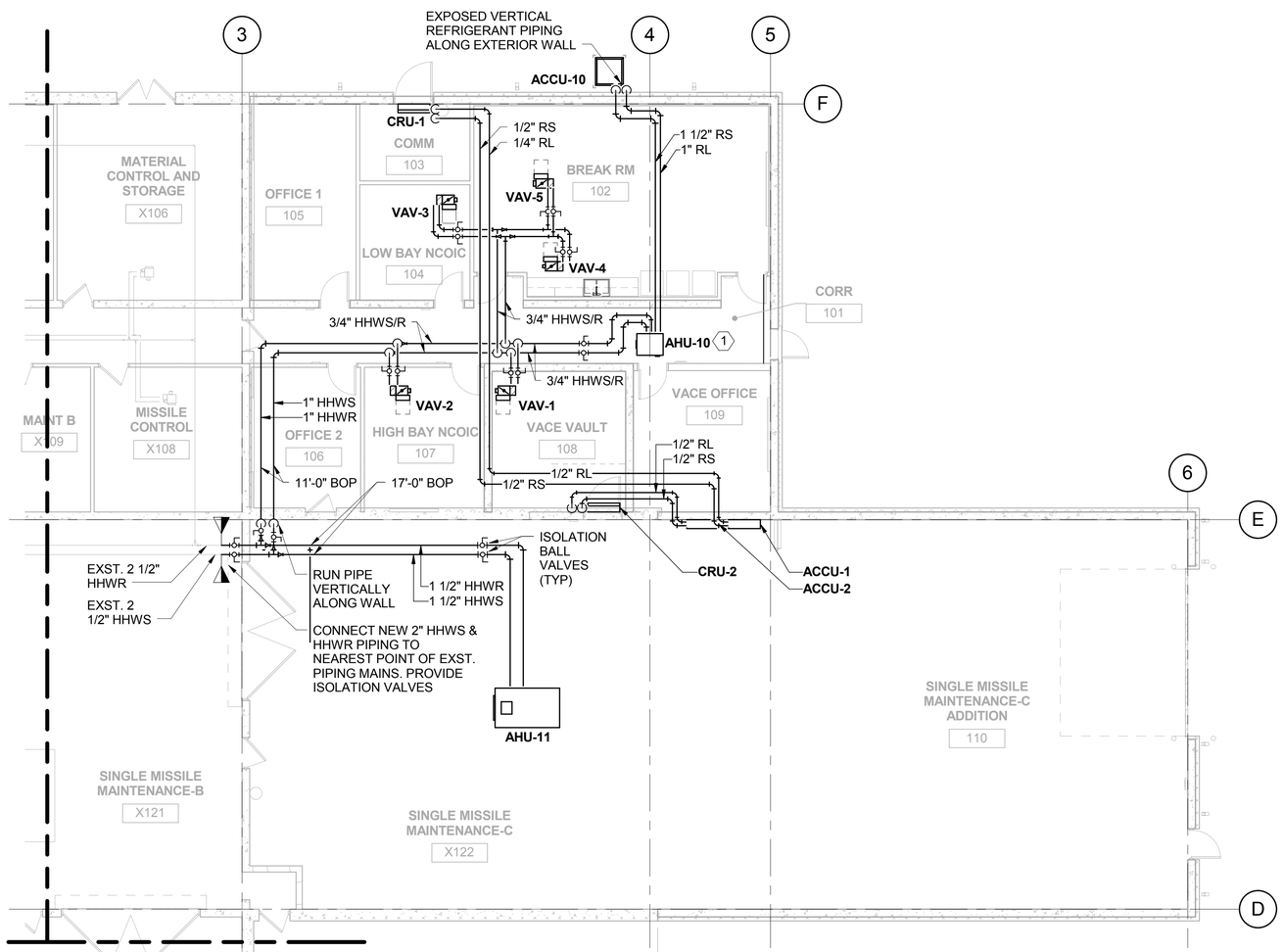

A1 MECHANICAL PIPING PLAN

PLAN NORTH

0 4' 8' 16'

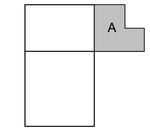

KEYPLAN

GENERAL NOTES:

1. FOR MECHANICAL LEGEND, SYMBOLS AND ABBREVIATIONS, SEE SHEET M-001.
2. PIPING RUNOUTS ARE 3/4" UNLESS NOTED OTHERWISE.
3. BALANCE EXISTING SYSTEM PUMP TO ACCOMMODATE MODIFIED HHW SYSTEM TOTAL SYSTEM FLOW RATE/PRESSURE DROP.
4. SEE DETAIL A3/M504 FOR HOT WATER COIL PIPING REQUIREMENTS AT VAV UNITS AND AIR HANDLING UNITS.

KEYED NOTES:

1. CONDENSATE FROM AHU-10 SHALL BE GRAVITY ROUTE TO A FLOOR DRAIN BENEATH KS-1. SEE P-101 FOR LOCATION.

US ARMY CORPS OF ENGINEERS
OMAHA DISTRICT

SYM.	DATE	DESCRIPTION	SYM.	DATE	DESCRIPTION	APPR.

DESIGNED BY: G.JOHNSON | DATE: APRIL 2016
DWN BY: G.JOHNSON | CKD BY: G.JOHNSON | SOLICITATION NO.: W912BF-16-B-0007
SUBMITTED BY: - | CONTRACT NO.: -
FILE NAME: M48M-111 | FILE NUMBER: AF212-220
SIZE: 34X22 | PLOT SCALE: AS INDICATED | PLOT DATE: 4/22/16

U.S. ARMY ENGINEER DISTRICT
CORPS OF ENGINEERS
OMAHA, NEBRASKA

BURNS & McDONNELL
8201 NORMAN CENTER DR. #300
BLOOMINGTON, MN 55437
952-656-6003

FY15 P-341 CONSTRUCT ADDITION B1134
MINOT AFB, NORTH DAKOTA
PN: QJVF143101

MECHANICAL PIPING PLAN

SHEET IDENTIFICATION NUMBER
M-111

4/22/2016 4:11:53 PM
COPYRIGHT © 2016 BURNS & McDONNELL ENGINEERING COMPANY, INC.

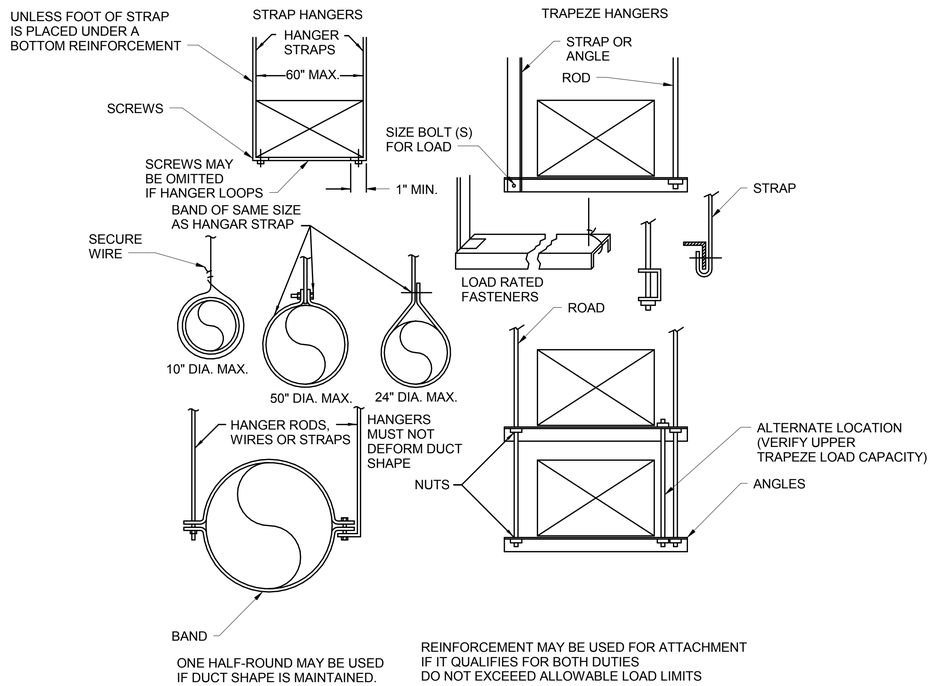

D1 LOWER DUCT HANGER ATTACHMENTS

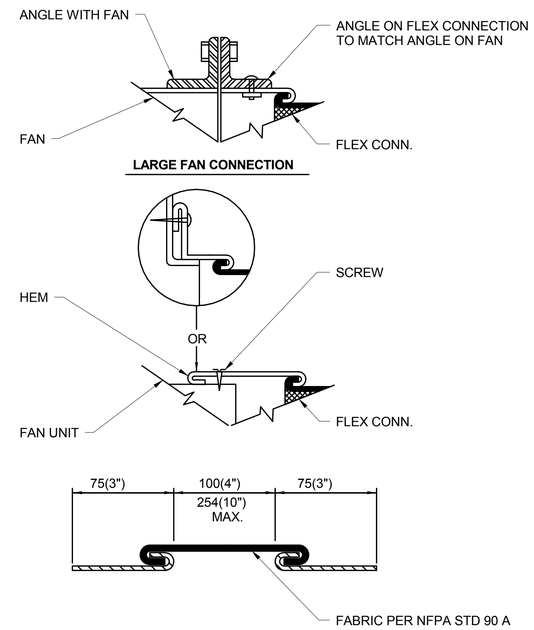

D3 FLEXIBLE CONNECTIONS TO AIR DUCT OR FAN

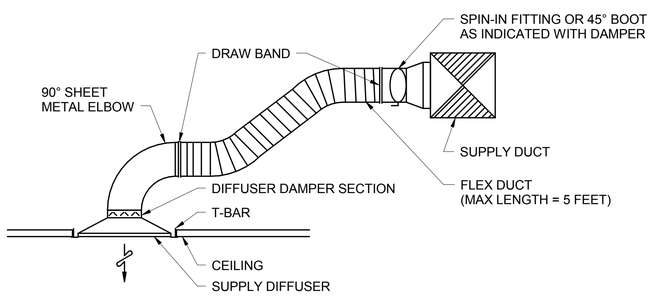

A1 FLEXIBLE DUCT AT DIFFUSER

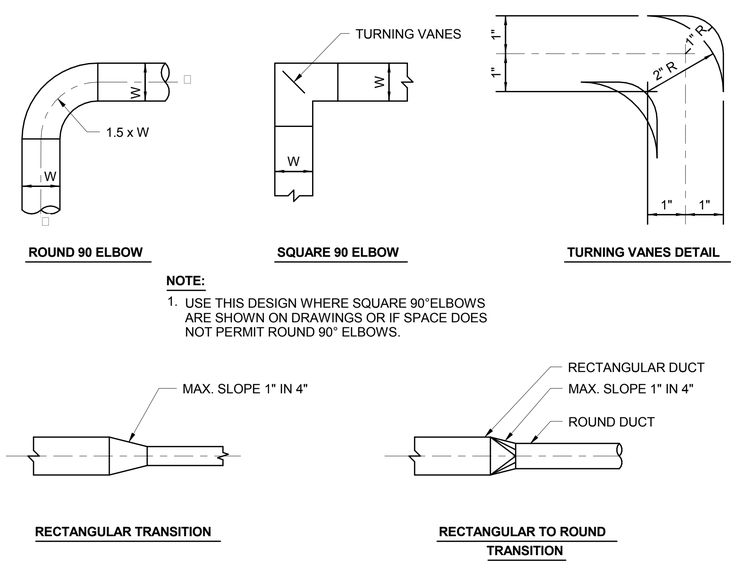

NOTE:

1. USE THIS DESIGN WHERE SQUARE 90°ELBOWS ARE SHOWN ON DRAWINGS OR IF SPACE DOES NOT PERMIT ROUND 90° ELBOWS.

A3 LOW VELOCITY DUCT LAYOUT

US ARMY CORPS OF ENGINEERS
OMAHA DISTRICT

SYM.	DATE	DESCRIPTION	APPR.	SYM.	DATE	DESCRIPTION	APPR.

DESIGNED BY: G.JOHNSON | DATE: APRIL 2016
DWN BY: G.JOHNSON | CKD BY: R.DARNELL | SOLICITATION NO.: W912BF-16-B-0007
SUBMITTED BY: - | CONTRACT NO.: -
FILE NAME: M4BM-501 | FILE NUMBER: AF212-220
SIZE: 34X22 | PLOT SCALE: AS INDICATED | PLOT DATE: 4/22/16

U.S. ARMY ENGINEER DISTRICT
CORPS OF ENGINEERS
OMAHA, NEBRASKA

BURNS & McDONNELL
8201 NORMAN CENTER DR. #300
BLOOMINGTON, MN 55437
952-656-6003

FY15 P-341 CONSTRUCT ADDITION B1134
MINOT AFB, NORTH DAKOTA
PN: QJVF143101

MECHANICAL DETAILS

SHEET IDENTIFICATION NUMBER
M-501

4/22/2016 4:11:53 PM
COPYRIGHT © 2016 BURNS & McDONNELL ENGINEERING COMPANY, INC.

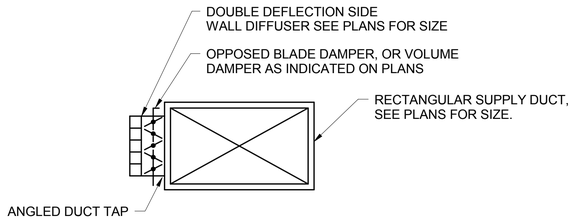

C1 DUCT MOUNTED GRILLE DETAIL

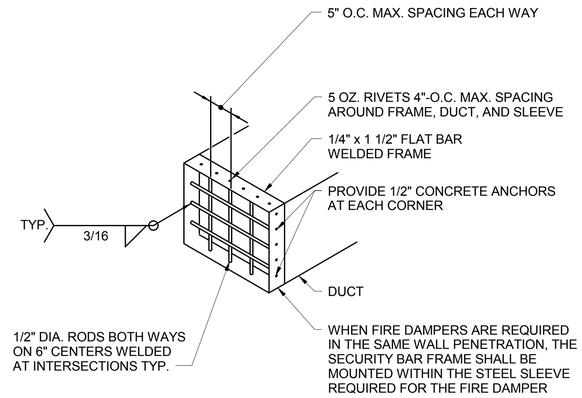

C3 SECURITY BARS IN DUCT DETAIL

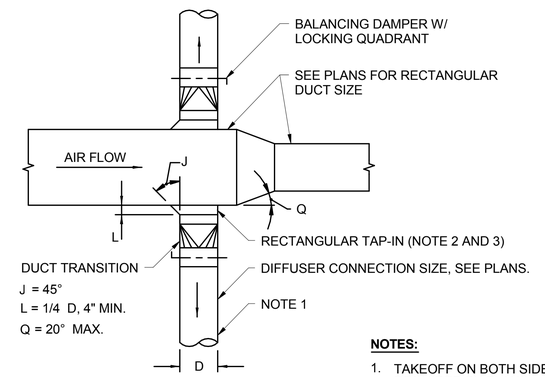

NOTES:

1. TAKEOFF ON BOTH SIDES OR SINGLE SIDE AS REQUIRED BY PLANS.
2. CLINCH LOCK CONNECTION TO DUCT SHALL HAVE CORNER SEALS (SEE SMACNA MANUAL).
3. EXTRACTORS, SCOOPS, DEFLECTORS OR DAMPERS THAT PROTRUDE INTO THE MAIN DUCT SHALL NOT BE USED. BALANCING DAMPERS SHALL BE LOCATED TO PREVENT PROTRUSION INTO THE MAIN DUCT AND TO PROVIDE STABLE AIR FLOW AND MINIMAL NOISE WHEN ADJUSTED.

C4 DUCT MAIN W/ 2 TAKEOFFS DETAIL

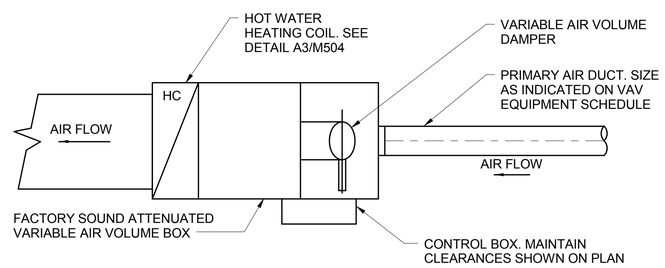

A3 VARIABLE AIR VOLUME BOX DETAIL

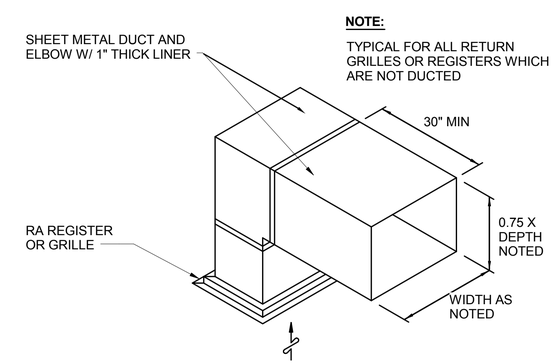

NOTE:

TYPICAL FOR ALL RETURN GRILLES OR REGISTERS WHICH ARE NOT DUCTED

A4 RETURN AIR SOUND TRAP BOOT DETAIL

US ARMY CORPS OF ENGINEERS
OMAHA DISTRICT

SYM.	DATE	DESCRIPTION	APPR.	SYM.	DATE	DESCRIPTION	APPR.

DESIGNED BY: G.JOHNSON
DWN BY: G.JOHNSO
CKD BY: R.DARNELL
SUBMITTED BY: -
DATE: APRIL 2016
SOLICITATION NO.: W9128F-16-B-0007
CONTRACT NO.: -
FILE NUMBER: AF212-220
FILE NAME: MIA8M-502
SIZE: 34X22
PLOT SCALE: AS INDICATED
PLOT DATE: 4/22/16

U.S. ARMY ENGINEER DISTRICT
CORPS OF ENGINEERS
OMAHA, NEBRASKA

BURNS & McDONNELL
8201 NORMAN CENTER DR. #300
BLOOMINGTON, MN 55437
952-656-6003

FY15 P-341 CONSTRUCT ADDITION B1134
MINOT AFB, NORTH DAKOTA
PN: QJVF143101

MECHANICAL DETAILS

SHEET IDENTIFICATION NUMBER
M-502

4/22/2016 4:11:54 PM
COPYRIGHT © 2016 BURNS & McDONNELL ENGINEERING COMPANY, INC.

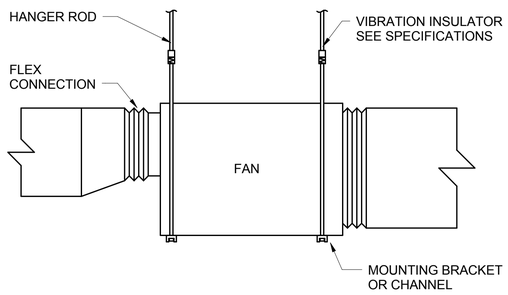

C1 INLINE FAN DETAIL

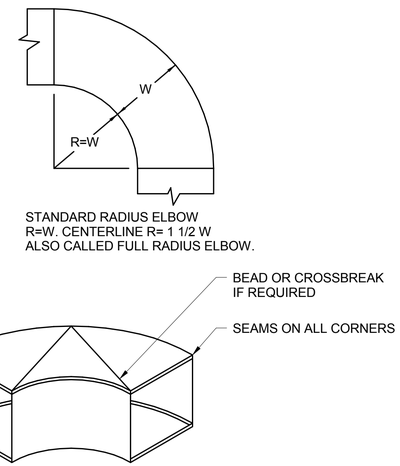

C2 STANDARD CURVE AIR DUCT ELBOW

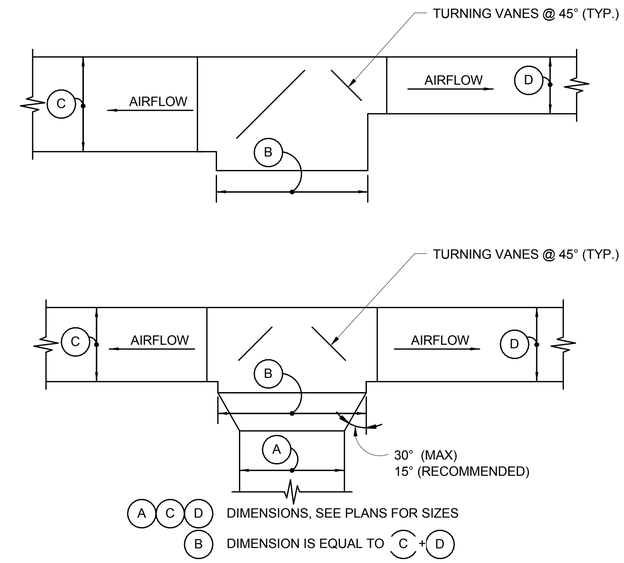

C4 LOW PRESSURE "TEE" DUCT FITTING

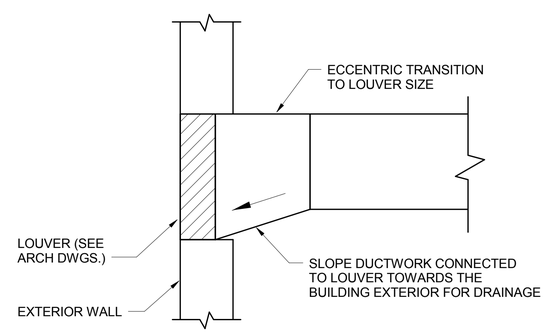

NOT TO SCALE

A4 SLOPED SHEETMETAL PLENUM AT LOUVER DETAIL

US ARMY CORPS OF ENGINEERS
OMAHA DISTRICT

SYM.	DATE	DESCRIPTION	APPR.	SYM.	DATE	DESCRIPTION	APPR.

DESIGNED BY: G.JOHNSON
DWN BY: G.JOHNSON
CKD BY: R.DARNELL
SUBMITTED BY: -
DATE: APRIL 2016
SOLICITATION NO.: W912BF-16-B-0007
CONTRACT NO.: -
FILE NAME: MI48M-503
FILE NUMBER: AF212-220
SIZE: 34X22
PLOT SCALE: AS INDICATED
PLOT DATE: 4/22/16

U.S. ARMY ENGINEER DISTRICT
CORPS OF ENGINEERS
OMAHA, NEBRASKA

BURNS & McDONNELL
8201 NORMAN CENTER DR. #300
BLOOMINGTON, MN 55437
952-656-6003

FY15 P-341 CONSTRUCT ADDITION B1134
MINOT AFB, NORTH DAKOTA
PN: QJVF143101

MECHANICAL DETAILS

SHEET IDENTIFICATION NUMBER
M-503

4/22/2016 4:11:55 PM
COPYRIGHT © 2016 BURNS & McDONNELL ENGINEERING COMPANY, INC.

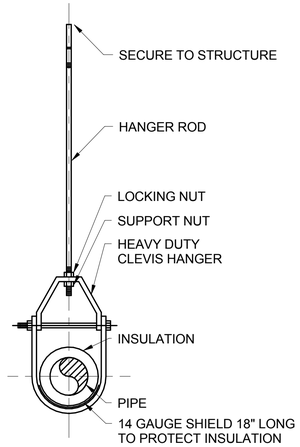

C1 PIPE HANGER - CLEVIS TYPE

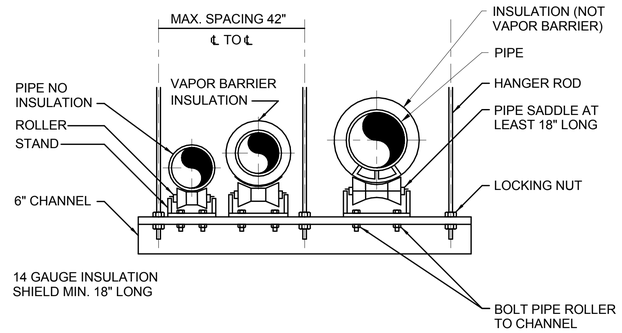

C2 PIPE HANGER - TRAPEZE TYPE

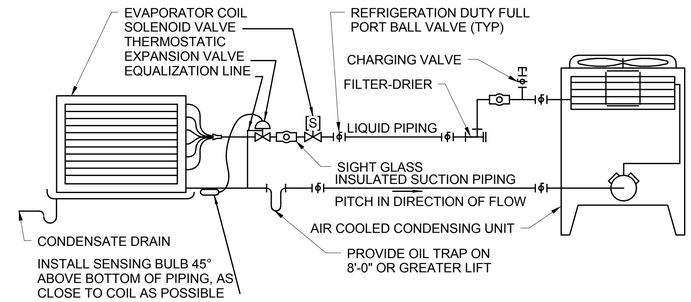

NOTES:

1. CONTRACTOR IS RESPONSIBLE FOR COORDINATING REFRIGERANT LIQUID AND SUCTION PIPING, SIZES, ROUTING, AND ALL ACCESSORIES WITH EQUIPMENT MANUFACTURER. MAINTAIN UNIFORM SLOPE TO PREVENT OIL FROM POOLING IN LOW POINTS IN THE REFRIGERANT PIPING SYSTEM.

C4 DX SPLIT SYSTEM PIPING

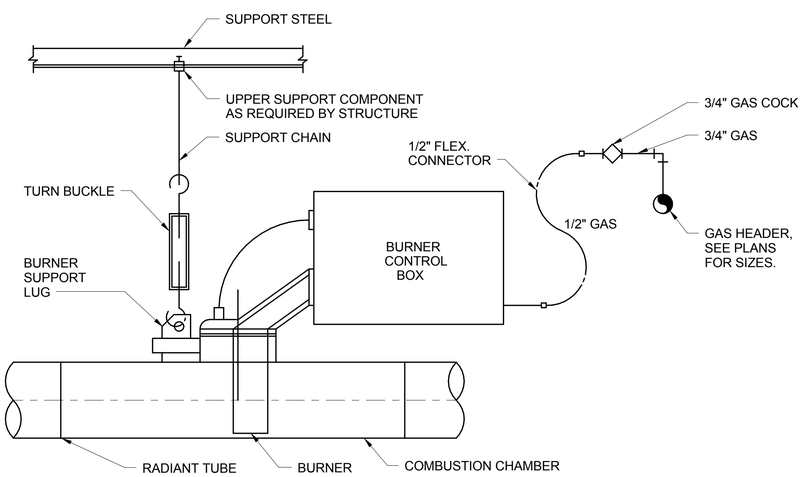

A1 RADIANT HEATER PIPING & SUPPORT

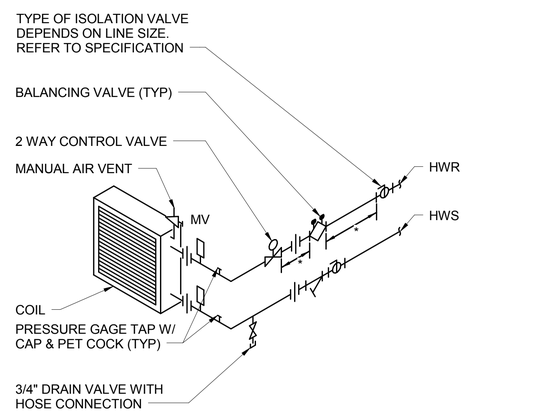

* STRAIGHT LENGTHS OF UNOBSTRUCTED PIPE WITHOUT INLINE APPURTENANCES SHALL BE INSTALLED UP AND DOWNSTREAM OF FLOW CONTROL BALANCING VALVES PER MFR INSTALLATION INSTRUCTIONS.

A3 HOT WATER SINGLE COIL W/ 2-WAY VALVE

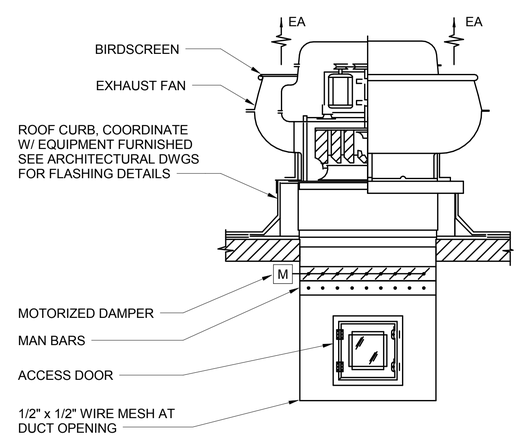

A4 UPBLAST CENTRIFUGAL EXHAUST FAN

US ARMY CORPS OF ENGINEERS
OMAHA DISTRICT

SYM.	DATE	DESCRIPTION	APPR.	SYM.	DATE	DESCRIPTION	APPR.

DESIGNED BY: G.JOHNSON | DATE: APRIL 2016
DWN BY: G.JOHNSON | CKD BY: R.DARNELL | SOLICITATION NO.: W912BF-16-B-0007
SUBMITTED BY: G.JOHNSON | CONTRACT NO.: -
FILE NAME: M4BM-504 | FILE NUMBER: AF212-220
SIZE: 34X22 | PLOT SCALE: AS INDICATED | PLOT DATE: 4/22/16

U.S. ARMY ENGINEER DISTRICT
CORPS OF ENGINEERS
OMAHA, NEBRASKA

BURNS & McDONNELL
8201 NORMAN CENTER DR. #300
BLOOMINGTON, MN 55437
952-656-6003

FY15 P-341 CONSTRUCT ADDITION B1134
MINOT AFB, NORTH DAKOTA
PN: QJVF143101

MECHANICAL DETAILS

SHEET IDENTIFICATION NUMBER
M-504

4/22/2016 4:11:56 PM
COPYRIGHT © 2016 BURNS & McDONNELL ENGINEERING COMPANY, INC.

AIR HANDLING UNIT SCHEDULE (AHU)

TAG	LOCATION	SERVING	OUTDOOR AIRFLOW (CFM)	SUPPLY AIRFLOW (CFM)	ESP (IN W.C.)	SUPPLY FAN SPEED (RPM)	SUPPLY FAN MOTOR (HP)	COOLING COIL TYPE	COOLING COIL CAPACITY TOT (MBH)	COOLING COIL CAPACITY SENS (MBH)	COOLING COIL AIR EAT DB (DEG F)	COOLING COIL AIR EAT WB (DEG F)	COOLING COIL AIR LAT DB (DEG F)	COOLING COIL AIR LAT WB (DEG F)	HEATING COIL CAPACITY (MBH)	HEATING COIL EAT DB (DEG F)	HEATING COIL LAT DB (DEG F)	ELECTRICAL VOLTS	ELECTRICAL PHASE	ELECTRICAL HERTZ	WEIGHT (LBS)	BASIS OF DESIGN MFR	BASIS OF DESIGN MODEL	NOTES
AHU-10	102	ADMIN	375	950	0.5	1725	1	D/X	32.83	29.84	84.1	65.6	55.48	54.14	29.82	0	55	460	3	60	137.6	TRANE	BCHD 024 BLOWER COIL	1, 2, 3, 4, 5, 6, 7
AHU-11	X122	LOW BAY	1400	4200	1.5	1300	5	N/A	0	0	0	0	0	0	218	39	86.86	460	3	60	773.5	TRANE	PERFORMANCE CLIMATE CHANGER, SIZE 08	2, 6, 7

NOTES:
1. PROVIDE FAN WITH ECM MOTOR.
2. PROVIDE SINGLE POINT ELECTRICAL CONNECTION.
3. ROUTE REFRIGERANT PIPING TO CONDENSING UNIT, ACCU-10, AT EXTERIOR.
4. PROVIDE WITH GALVANIZED DRAIN PAN. ROUTE CONDENSATE DRAIN PIPING TO FLOOR DRAIN AT SINK.
5. REFRIGERANT: R-410A
6. HEATING COIL SELECTED AT 40% PROPYLENE GLYCOL, 180°F EWT, 160° LWT.
7. PROVIDE WITH 2" MERV 8 FILTERS.

FAN SCHEDULE (F)

TAG	LOCATION	SERVING	TYPE	AIRFLOW (CFM)	EXT. STATIC PRESSURE (IN)	DRIVE TYPE	FAN SPEED (RPM)	TIP SPEED (RPM)	SOUND (SONES)	MOTOR HP	MOTOR SPEED (RPM)	MOTOR ENCLOSURE	ELECTRICAL VOLTS	ELECTRICAL PHASE	ELECTRICAL HERTZ	DISCONNECT BY	BASIS OF DESIGN MFR	BASIS OF DESIGN MODEL	NOTES
EF-1	X122	SUMMER VENTILATION	UPBLAST CENTRIFUGAL	14000	0.5	BELT	587	5531	22	5	1725	ODP	460	3	60	DIV. 26	GREENHECK	CUBE-360-50	1, 4
EF-2	X122	SUMMER VENTILATION	UPBLAST CENTRIFUGAL	14000	0.5	BELT	587	5531	22	5	1725	ODP	460	3	60	DIV. 26	GREENHECK	CUBE-360-50	2, 4
RF-10	102	AHU-10	INLINE CENTRIFUGAL	950	0.5	DIRECT	1479	4330	6.5	0.25	1725	ODP	120	1	60	DIV. 26	GREENHECK	SQ-100-VG	3, 5

NOTES:
1. INTERLOCK FAN WITH IH-1 DAMPER.
2. INTERLOCK FAN WITH IH-2 DAMPER.
3. INTERLOCK FAN WITH AHU-10 SUPPLY FAN.
4. PROVIDE WITH 18" HIGH, INSULATED, ALL WELDED, GALVANIZED STEEL, PITCHED ROOF CURB.
5. PROVIDE FAN WITH ECM MOTOR.

VARIABLE AIR VOLUME BOX SCHEDULE (VAV)

TAG	AHU CONNECTION	LOCATION	TERMINAL SPEC. TYPE	MAX DESIGN AIRFLOW (CFM)	MIN DESIGN AIRFLOW (CFM)	HTG AIRFLOW (CFM)	HOT WATER HEATING COIL CAPACITY (MBH)	HOT WATER HEATING COIL MINIMUM INLET AIR TEMP. (DEG. F.)	HOT WATER HEATING COIL DISCHARGE AIR TEMP. (DEG. F.)	HOT WATER HEATING COIL EWT (DEG. F.)	HOT WATER HEATING COIL LWT (DEG. F.)	HOT WATER HEATING COIL FLOW (GPM)	HOT WATER HEATING COIL MAX. WATER PRESSURE DROP (FT. W.C.)	VAV BOX INLET DIAMETER (IN.)	MIN. BOX INLET PRESSURE (IN. W.C.)	MAX. SOUND LEVEL (NC)	NOTES
VAV-1	AHU-10	108, 109	SINGLE DUCT, HW COIL	140	45	45	1.5	55	86	180	153	0.15	0.10	5	0.06	23	1, 2, 3, 4, 5, 6
VAV-2	AHU-10	106, 107	SINGLE DUCT, HW COIL	230	70	70	3.2	55	96	180	159	0.32	0.11	5	0.07	24	1, 2, 3, 4, 5, 6
VAV-3	AHU-10	104, 105	SINGLE DUCT, HW COIL	210	85	85	3.4	55	91	180	155	0.30	0.10	5	0.06	22	1, 2, 3, 4, 5, 6
VAV-4	AHU-10	101	SINGLE DUCT, HW COIL	100	35	35	2.9	55	99	180	159	0.30	0.10	4	0.02	20	1, 2, 3, 4, 5, 6
VAV-5	AHU-10	102	SINGLE DUCT, HW COIL	400	200	200	7.3	55	88	180	158	0.71	0.51	7	0.13	20	1, 2, 3, 4, 5, 6

NOTES:
1. SELECTIONS BASED ON TITUS DESV SINGLE-DUCT VAV BOXES.
2. PROVIDE MANUFACTURER'S ROUND OUTLET CONNECTION.
3. VAV CONTROLLER SHALL BE COMPATIBLE WITH EXISTING BUILDING DDC SYSTEM. COORDINATE WITH CONTROL CONTRACTOR FOR EXACT REQUIREMENTS.
4. SEE MANUFACTURER'S DATA FOR EXACT TERMINAL UNIT HEIGHT, LENGTH, WIDTH AND COIL CONNECTIONS.
5. HEATING COIL SELECTED AT 40% PROPYLENE GLYCOL, 180°F EWT, 160° LWT.
6. 24V POWER BEING SUPPLIED BY THE CONTROL PANEL MOUNTED AT AHU-10.

DIFFUSER, REGISTER, & GRILLE SCHEDULE (DRG)

TAG	DESCRIPTION	MANUF.	MODEL	MOUNTING	THROW PATTERN	BLADE DEFLECTION	BLADE SPACING	NOTES
A	24X24 SQUARE PLAQUE FACE SA DIFFUSER	TITUS	OMNI	LAY-IN	4-WAY	-	-	1, 2
B	RECTANGULAR SA GRILLE	TITUS	271	DUCT	1-WAY	DOUBLE	3/4"	1, 2, 3
C	EGGCRATE RA, EA, TA GRILLE	TITUS	50F	LAY-IN, DUCT	-	EGGCRATE	1/2" X 1/2"	1, 2, 3

NOTES:
1. MODEL NUMBERS ARE FOR GENERAL IDENTIFICATION. SPECIFIC MODEL NUMBERS ARE DEPENDENT ON APPLICABLE NOTES & ARCHITECTURAL PLANS. VERIFY FINISH, MOUNTING TYPE AND DIMENSIONS WITH ARCHITECTURAL WORK.
2. SEE DRAWING M-001 FOR DIFFUSER, REGISTER AND GRILLE SYMBOLS AND DESIGNATORS.
3. PROVIDE WITH MANUFACTURERS OPPOSED BLADE DAMPER, WHERE INDICATED ON PLANS.

AIR COOLED CONDENSING UNIT SCHEDULE (ACCU)

TAG	AMBIENT TEMP (DEG F)	TOTAL CAPACITY (MBH)	SENSIBLE CAPACITY (MBH)	EFFICIENCY (SEER)	HEATING CAPACITY (MBH)	ELECTRICAL VOLTS	ELECTRICAL PHASE	ELECTRICAL STARTER BY	BASIS OF DESIGN MFR	BASIS OF DESIGN MODEL	NOTES
ACCU-1	95	18	12.68	18	21.6	208	1	DIV. 26	DAIKIN	RX18NMVJU	2, 3
ACCU-2	95	9	9	19	10	208	1	DIV. 26	DAIKIN	RX09NMVJU	2, 3
ACCU-10	95	36	27	19	0	460	3	DIV. 26	TRANE	4TTA9036	1, 3

NOTES:
1. PROVIDE WITH MANUFACTURERS EQUIPMENT PAD TO MOUNT ON GRADE.
2. WALL MOUNT ON PLATFORM IN LOW BAY.
3. ROUTE REFRIGERANT PIPING TO INDOOR EVAPORATOR UNIT AS SIZED AND SHOWN ON PLANS.

INTAKE HOOD SCHEDULE (IH)

TAG	LOCATION	SERVICE	AIRFLOW (CFM)	ROOF OPENING WIDTH (IN)	ROOF OPENING LENGTH (IN)	ROOF OPENING THROAT AREA (SF)	THROAT VELOCITY (FPM)	MAX PRESSURE DROP (IN H2O)	BASIS OF DESIGN MFR	BASIS OF DESIGN MODEL	NOTES
IH-1	X122	SUMMER VENTILATION	14000	42	60	17.50	800	0.115	GREENHECK	WIH	1, 2, 3
IH-2	X122	SUMMER VENTILATION	14000	42	60	17.50	800	0.115	GREENHECK	WIH	1, 2, 3

NOTES:
1. PROVIDE WITH MOTORIZED DAMPER, ALUMINUM BIRDSCREEN, AND ALUMINUM INSECT SCREEN.
2. PROVIDE WITH 18" HIGH, INSULATED, ALL WELDED, GALVANIZED STEEL, PITCHED ROOF CURB.
3. PROVIDE WITH 2" THROWAWAY FILTER.

COMPUTER ROOM UNIT SCHEDULE (CRU)

TAG	LOCATION	REFRIGERANT	COOLING TOT CAP (MBH)	COOLING SENS CAP (MBH)	COOLING EAT DB (DEG F)	COOLING EAT WB (DEG F)	HEATING CAPACITY (MBH)	ELEC. VOLTS	ELEC. PHASE	WEIGHT (LBS)	BASIS OF DESIGN MFR	BASIS OF DESIGN MODEL	NOTES
CRU-1	103	R410A	18.00	12.68	80	67	21.6	208	1	26.5	DAIKIN	FTX18NMVJU	1, 2, 3
CRU-2	108	R410A	9.00	9	80	67	10	208	1	26.5	DAIKIN	FTX09NMJU	1, 2, 3

NOTES:
1. PROVIDE CONDENSATE PUMP WITH UNIT. SEE PLUMBING PLANS FOR CONDENSATE PIPE ROUTING.
2. ROUTE REFRIGERANT PIPING TO AIR COOLED CONDENSING UNIT AS SIZED AND SHOWN ON DRAWINGS.
3. PROVIDED WITH INTEGRAL THERMOSTAT.

GAS INFRARED HEATER SCHEDULE (GIH)

TAG	LOCATION	HEATING FUEL TYPE	HEATING MIN WORKING PRESURE (IN)	HEATING STAGES	HEATING CAPACITY (MBH)	UNIT LENGTH (FT)	ELECTRICAL VOLTS	ELECTRICAL PHASE	BASIS OF DESIGN MFR	BASIS OF DESIGN MODEL	NOTES
GIH-1	X122	NG	5	1	90	31.2	120	1	SCHWANK	UHE 90-30	1, 2

NOTES:
1. PROVIDE WITH THERMOSTAT, SCR CONTROLLER, CORD & PLUG POWER.
2. ANGLE DEFLECTOR AT 45° TOWARDS FLOOR.

US ARMY CORPS OF ENGINEERS
OMAHA DISTRICT

SYM.	DATE	DESCRIPTION	APPR.

SYM.	DATE	DESCRIPTION	APPR.

DESIGNED BY: G.HANSON | DWN BY: G.JOHNSON | CKD BY: R.DARNELL | SUBMITTED BY: -
DATE: APRIL 2016 | SOLICITATION NO.: W912BF-16-B-0007 | CONTRACT NO.: - | FILE NUMBER: AF212-220 | PLOT DATE: 4/22/16
FILE NAME: MA8M-601 | PLOT SCALE: AS INDICATED | SIZE: 34X22

U.S. ARMY ENGINEER DISTRICT
CORPS OF ENGINEERS
OMAHA, NEBRASKA

BURNS & McDONNELL
8201 NORMAN CENTER DR. #300
BLOOMINGTON, MN 55437
952-656-6003

FY15 P-341 CONSTRUCT ADDITION B1134
MINOT AFB, NORTH DAKOTA
PN: QJVF143101

MECHANICAL SCHEDULES

SHEET IDENTIFICATION NUMBER
M-601

4/22/2016 4:11:57 PM
COPYRIGHT © 2016 BURNS & McDONNELL ENGINEERING COMPANY, INC.

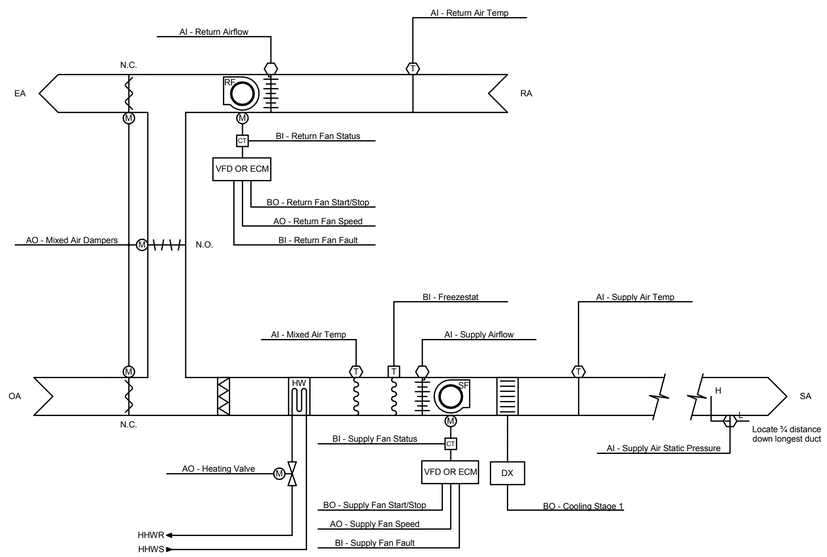

AHU-10 CONTROL SCHEMATIC

POINT NAME	HARD-WARE POINTS: ANALOG IN	ANALOG OUTPUT	BINARY INPUT	BINARY OUTPUT	SOFT-WARE POINTS: ANALOG VALUE	BINARY VALUE	CONTROL LOOP	SCHEDULE	TREND	ALARM	SHOW ON GRAPHIC
SUPPLY AIR STATIC PRESSURE	•								•	•	•
SUPPLY AIRFLOW	•								•		•
RETURN AIRFLOW	•								•		•
MIXED AIR TEMP	•								•		•
RETURN AIR TEMP	•								•		•
SUPPLY AIR TEMP	•								•		•
SUPPLY FAN SPEED		•							•		•
RETURN FAN SPEED		•							•		•
HEATING VALVE		•							•		•
MIXED AIR DAMPERS		•							•		•
FREEZESTAT			•						•	•	•
SUPPLY FAN FAULT			•							•	•
SUPPLY FAN STATUS			•						•		•
RETURN FAN FAULT			•							•	•
RETURN FAN STATUS			•						•		•
SUPPLY FAN START/STOP				•					•		•
RETURN FAN START/STOP				•					•		•
COOLING STAGE 1				•					•		•
SUPPLY AIR STATIC PRESSURE SETPOINT					•				•		•
RETURN AIRFLOW SETPOINT					•				•		•
HEATING MIXED AIR TEMP SETPOINT					•				•		•
SUPPLY AIR TEMP SETPOINT					•				•		•
ECONOMIZER MIXED AIR TEMP SETPOINT					•				•		•
EMERGENCY SHUTDOWN						•			•	•	•
SCHEDULE								•			
HIGH SUPPLY AIR STATIC PRESSURE										•	
LOW SUPPLY AIR STATIC PRESSURE										•	
SUPPLY FAN FAILURE										•	
SUPPLY FAN IN HAND										•	
SUPPLY FAN RUNTIME EXCEEDED										•	
RETURN FAN FAILURE										•	
RETURN FAN IN HAND										•	
RETURN FAN RUNTIME EXCEEDED										•	
HIGH RETURN AIRFLOW										•	
LOW RETURN AIRFLOW										•	
COMPRESSOR RUNTIME EXCEEDED										•	
HIGH SUPPLY AIR TEMP										•	
LOW SUPPLY AIR TEMP										•	
PREFILTER CHANGE REQUIRED										•	
HIGH MIXED AIR TEMP										•	
LOW MIXED AIR TEMP										•	
HIGH RETURN AIR TEMP										•	
LOW RETURN AIR TEMP										•	
HIGH SUPPLY AIR TEMP										•	
LOW SUPPLY AIR TEMP										•	
TOTALS	6	4	5	3	5	1	0	1	22	25	24
TOTALS	18				54						

US ARMY CORPS OF ENGINEERS
OMAHA DISTRICT

SYM.	DATE	DESCRIPTION	APPR.

SYM.	DATE	DESCRIPTION	APPR.

DESIGNED BY: G.JOHNSON
DWN BY: G.JOHNSON
CKD BY: R.DARNELL
SUBMITTED BY: -
DATE: APRIL 2016
SOLICITATION NO.: W912BF-16-B-0007
CONTRACT NO.: -
FILE NAME: MIA8M-701
FILE NUMBER: AF212-220
SIZE: 34X22
PLOT SCALE: AS INDICATED
PLOT DATE: 4/22/16

U.S. ARMY ENGINEER DISTRICT
CORPS OF ENGINEERS
OMAHA, NEBRASKA

BURNS & McDONNELL
8201 NORMAN CENTER DR. #300
BLOOMINGTON, MN 55437
952-656-6003

FY15 P-341 CONSTRUCT ADDITION B1134
MINOT AFB, NORTH DAKOTA
PN: QJVF143101

MECHANICAL CONTROLS

SHEET IDENTIFICATION NUMBER
M-701

4/22/2016 4:11:58 PM
COPYRIGHT © 2016 BURNS & McDONNELL ENGINEERING COMPANY, INC.

AHU-10 CONTROL SEQUENCE

RUN CONDITIONS - SCHEDULED:
THE UNIT SHALL RUN BASED UPON AN OPERATOR ADJUSTABLE SCHEDULE.

EMERGENCY SHUTDOWN:
THE UNIT SHALL SHUT DOWN AND GENERATE AN ALARM UPON RECEIVING AN EMERGENCY SHUTDOWN SIGNAL.

FREEZE PROTECTION:
THE UNIT SHALL SHUT DOWN AND GENERATE AN ALARM UPON RECEIVING A FREEZESTAT STATUS.

AHU OPTIMAL START:
THE UNIT SHALL START PRIOR TO SCHEDULED OCCUPANCY BASED ON THE TIME NECESSARY FOR THE ZONES TO REACH THEIR OCCUPIED SETPOINTS. THE START TIME SHALL AUTOMATICALLY ADJUST BASED ON CHANGES IN OUTSIDE AIR TEMPERATURE AND ZONE TEMPERATURES.

SUPPLY FAN:
THE SUPPLY FAN SHALL RUN ANYTIME THE UNIT IS COMMANDED TO RUN, UNLESS SHUTDOWN ON SAFETIES. TO PREVENT SHORT CYCLING, THE SUPPLY FAN SHALL HAVE A USER DEFINABLE (ADJ.) MINIMUM RUNTIME.

ALARMS SHALL BE PROVIDED AS FOLLOWS:
- SUPPLY FAN FAILURE: COMMANDED ON, BUT THE STATUS IS OFF.
- SUPPLY FAN IN HAND: COMMANDED OFF, BUT THE STATUS IS ON.
- SUPPLY FAN RUNTIME EXCEEDED: STATUS RUNTIME EXCEEDS A USER DEFINABLE LIMIT (ADJ.).

SUPPLY AIR DUCT STATIC PRESSURE CONTROL:
THE CONTROLLER SHALL MEASURE DUCT STATIC PRESSURE AND SHALL MODULATE THE SUPPLY FAN SPEED TO MAINTAIN A DUCT STATIC PRESSURE SETPOINT OF 1.0 IN H2O (ADJ.). THE SUPPLY FAN SPEED SHALL NOT DROP BELOW 30% (ADJ.).

ALARMS SHALL BE PROVIDED AS FOLLOWS:
- HIGH SUPPLY AIR STATIC PRESSURE: IF THE SUPPLY AIR STATIC PRESSURE IS 25% (ADJ.) GREATER THAN SETPOINT.
- LOW SUPPLY AIR STATIC PRESSURE: IF THE SUPPLY AIR STATIC PRESSURE IS 25% (ADJ.) LESS THAN SETPOINT.
- SUPPLY FAN FAULT.

RETURN FAN:
THE RETURN FAN SHALL RUN WHENEVER THE SUPPLY FAN RUNS.

ALARMS SHALL BE PROVIDED AS FOLLOWS:
- RETURN FAN FAILURE: COMMANDED ON, BUT THE STATUS IS OFF.
- RETURN FAN IN HAND: COMMANDED OFF, BUT THE STATUS IS ON.
- RETURN FAN RUNTIME EXCEEDED: STATUS RUNTIME EXCEEDS A USER DEFINABLE LIMIT (ADJ.).
- RETURN FAN FAULT.

RETURN AIRFLOW:
THE RETURN FAN SHALL MODULATE IN UNISON WITH THE SUPPLY FAN. RETURN AIRFLOW SETPOINT SHALL BE 100% (ADJ.) OF THE SUPPLY AIRFLOW MINUS 100 FT3/MIN (ADJ.). THE RETURN FAN SPEED SHALL NOT DROP BELOW 20% (ADJ.).

ALARMS SHALL BE PROVIDED AS FOLLOWS:
- HIGH RETURN AIRFLOW: IF THE RETURN AIRFLOW IS AN ADJUSTABLE PERCENTAGE GREATER THAN SETPOINT.
- LOW RETURN AIRFLOW: IF THE RETURN AIRFLOW IS AN ADJUSTABLE PERCENTAGE LESS THAN SETPOINT.

HEATING COIL VALVE:
THE CONTROLLER SHALL MEASURE THE MIXED AIR TEMPERATURE AND MODULATE THE HEATING COIL VALVE TO MAINTAIN ITS SETPOINT 5°F (ADJ.) LESS THAN THE SUPPLY AIR TEMPERATURE SETPOINT.

THE HEATING SHALL BE ENABLED WHENEVER:
- OUTSIDE AIR TEMPERATURE IS LESS THAN 60°F (ADJ.).
- AND THE ECONOMIZER (IF PRESENT) IS DISABLED.
- AND THE SUPPLY FAN STATUS IS ON.

THE HEATING COIL VALVE SHALL OPEN FOR FREEZE PROTECTION WHENEVER:
- MIXED AIR TEMPERATURE DROPS FROM 40°F TO 35°F (ADJ.).
- OR THE FREEZESTAT (IF PRESENT) IS ON.

SUPPLY AIR TEMPERATURE SETPOINT - FIXED:
THE CONTROLLER SHALL MONITOR THE SUPPLY AIR TEMPERATURE AND SHALL MAINTAIN FIXED SUPPLY AIR TEMPERATURE SETPOINTS AS FOLLOWS:

- COOLING & HEATING: THE SETPOINT SHALL BE 55°F (ADJ.)

COOLING STAGE:
THE CONTROLLER SHALL MEASURE THE SUPPLY AIR TEMPERATURE AND STAGE THE COOLING TO MAINTAIN ITS COOLING SETPOINT. TO PREVENT SHORT CYCLING, THE STAGE SHALL HAVE A USER DEFINABLE (ADJ.) MINIMUM RUNTIME.

THE COOLING SHALL BE ENABLED WHENEVER:
- OUTSIDE AIR TEMPERATURE IS GREATER THAN 60°F (ADJ.).
- AND THE ECONOMIZER (IF PRESENT) IS DISABLED OR FULLY OPEN.
- AND THE SUPPLY FAN STATUS IS ON.
- AND THE HEATING (IF PRESENT) IS NOT ACTIVE.

ALARMS SHALL BE PROVIDED AS FOLLOWS:
- HIGH SUPPLY AIR TEMP: IF THE SUPPLY AIR TEMPERATURE IS 5°F (ADJ.) GREATER THAN SETPOINT.

ECONOMIZER:
THE CONTROLLER SHALL MEASURE THE MIXED AIR TEMPERATURE AND MODULATE THE ECONOMIZER DAMPERS IN SEQUENCE TO MAINTAIN A SETPOINT 2°F (ADJ.) LESS THAN THE SUPPLY AIR TEMPERATURE SETPOINT. THE OUTSIDE AIR DAMPERS SHALL MAINTAIN A MINIMUM ADJUSTABLE POSITION OF 20% (ADJ.) OPEN WHENEVER OCCUPIED.

THE ECONOMIZER SHALL BE ENABLED WHENEVER:
- OUTSIDE AIR TEMPERATURE IS LESS THAN 65°F (ADJ.).
- AND THE OUTSIDE AIR TEMPERATURE IS LESS THAN THE RETURN AIR TEMPERATURE.
- AND THE SUPPLY FAN STATUS IS ON.

THE ECONOMIZER SHALL CLOSE WHENEVER:
- MIXED AIR TEMPERATURE DROPS FROM 40°F TO 35°F (ADJ.).
- OR THE FREEZESTAT (IF PRESENT) IS ON.
- OR ON LOSS OF SUPPLY FAN STATUS.

THE OUTSIDE AND EXHAUST AIR DAMPERS SHALL CLOSE AND THE RETURN AIR DAMPER SHALL OPEN WHEN THE UNIT IS OFF. IF OPTIMAL START UP IS AVAILABLE THE MIXED AIR DAMPER SHALL OPERATE AS DESCRIBED IN THE OCCUPIED MODE EXCEPT THAT THE OUTSIDE AIR DAMPER SHALL MODULATE TO FULLY CLOSED.

MINIMUM OUTSIDE AIR VENTILATION - FIXED PERCENTAGE:
THE OUTSIDE AIR DAMPERS SHALL MAINTAIN A MINIMUM ADJUSTABLE POSITION DURING BUILDING OCCUPIED HOURS AND BE CLOSED DURING UNOCCUPIED HOURS.

PREFILTER HOURS:
THE CONTROLLER SHALL MONITOR THE FAN RUNTIME.

ALARMS SHALL BE PROVIDED AS FOLLOWS:
- PREFILTER CHANGE REQUIRED: PREFILTER HAS BEEN IN USE FOR MORE THAN 2200 HRS (ADJ.).

MIXED AIR TEMPERATURE:
THE CONTROLLER SHALL MONITOR THE MIXED AIR TEMPERATURE AND USE AS REQUIRED FOR ECONOMIZER CONTROL OR PREHEATING CONTROL.

ALARMS SHALL BE PROVIDED AS FOLLOWS:
- HIGH MIXED AIR TEMP: IF THE MIXED AIR TEMPERATURE IS GREATER THAN 90°F (ADJ.).
- LOW MIXED AIR TEMP: IF THE MIXED AIR TEMPERATURE IS LESS THAN 45°F (ADJ.).

RETURN AIR TEMPERATURE:
THE CONTROLLER SHALL MONITOR THE RETURN AIR TEMPERATURE AND USE AS REQUIRED FOR SETPOINT CONTROL OR ECONOMIZER CONTROL (IF PRESENT).

ALARMS SHALL BE PROVIDED AS FOLLOWS:
- HIGH RETURN AIR TEMP: IF THE RETURN AIR TEMPERATURE IS GREATER THAN 90°F (ADJ.).
- LOW RETURN AIR TEMP: IF THE RETURN AIR TEMPERATURE IS LESS THAN 45°F (ADJ.).

SUPPLY AIR TEMPERATURE:
THE CONTROLLER SHALL MONITOR THE SUPPLY AIR TEMPERATURE.

ALARMS SHALL BE PROVIDED AS FOLLOWS:
- HIGH SUPPLY AIR TEMP: IF THE SUPPLY AIR TEMPERATURE IS GREATER THAN 65°F (ADJ.).
- LOW SUPPLY AIR TEMP: IF THE SUPPLY AIR TEMPERATURE IS LESS THAN 45°F (ADJ.).

US ARMY CORPS OF ENGINEERS
OMAHA DISTRICT

SYM.	DATE	DESCRIPTION	APPR.	SYM.	DATE	DESCRIPTION	APPR.

U.S. ARMY ENGINEER DISTRICT
CORPS OF ENGINEERS
OMAHA, NEBRASKA

BURNS & McDONNELL
8201 NORMAN CENTER DR. #300
BLOOMINGTON, MN 55437
952-656-6003

DESIGNED BY: G.JOHNSON	DATE: APRIL 2016
DWN BY: G.JOHNSON	CKD BY: R.DARNELL
SOLICITATION NO.: W912BF-16-B-0007	
SUBMITTED BY: -	CONTRACT NO.: -
FILE NAME: M-702	FILE NUMBER: AF212-220
SIZE: 34X22	PLOT SCALE: AS INDICATED
	PLOT DATE: 4/22/16

FY15 P-341 CONSTRUCT ADDITION B1134
MINOT AFB, NORTH DAKOTA
PN: QJVF143101

MECHANICAL CONTROLS

SHEET IDENTIFICATION NUMBER
M-702

4/22/2016 4:11:58 PM
COPYRIGHT © 2016 BURNS & McDONNELL ENGINEERING COMPANY, INC.

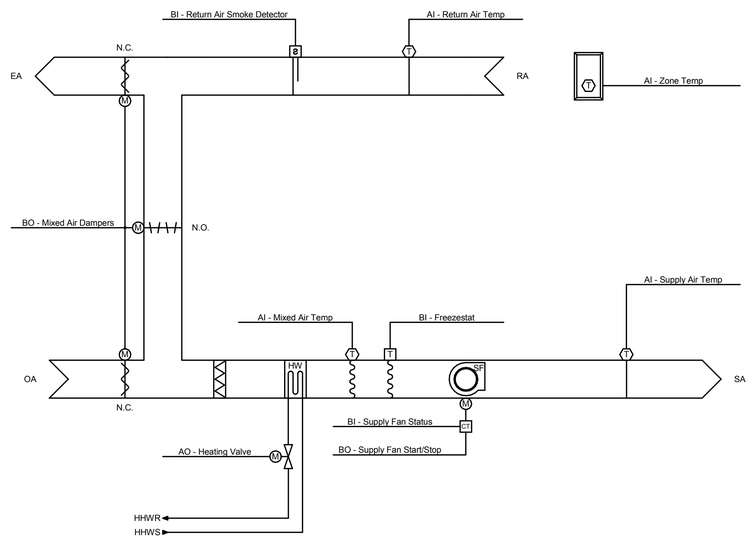

AHU-11 CONTROL SCHEMATIC

POINT NAME	HARD-WARE POINTS: ANALOG IN	ANALOG OUTPUT	BINARY INPUT	BINARY OUTPUT	SOFT-WARE POINTS: ANALOG VALUE	BINARY VALUE	CONTROL LOOP	SCHEDULE	TREND	ALARM	SHOW ON GRAPHIC
ZONE TEMP	•								•		•
MIXED AIR TEMP	•								•		•
RETURN AIR TEMP	•								•		•
SUPPLY AIR TEMP	•								•		•
HEATING VALVE		•							•		•
FREEZESTAT			•						•	•	•
RETURN AIR SMOKE DETECTOR			•						•	•	•
SUPPLY FAN STATUS			•						•		•
SUPPLY FAN START/STOP				•					•		•
MIXED AIR DAMPERS				•					•		•
EMERGENCY SHUTDOWN						•				•	•
SCHEDULE								•			
HEATING SETPOINT									•		•
HIGH ZONE TEMP										•	
LOW ZONE TEMP										•	
SUPPLY FAN FAILURE										•	
SUPPLY FAN IN HAND										•	
SUPPLY FAN RUNTIME EXCEEDED										•	
PREFILTER CHANGE REQUIRED										•	•
HIGH MIXED AIR TEMP										•	
LOW MIXED AIR TEMP										•	
HIGH RETURN AIR TEMP										•	
LOW RETURN AIR TEMP										•	
HIGH SUPPLY AIR TEMP										•	
LOW SUPPLY AIR TEMP										•	
TOTALS	4	1	3	2	0	1	0	1	11	15	13
TOTALS	10				28						

US ARMY CORPS OF ENGINEERS
OMAHA DISTRICT

SYM.	DATE	DESCRIPTION	APPR.	SYM.	DATE	DESCRIPTION	APPR.

DESIGNED BY: G.JOHNSON
DWN BY: G.JOHNSO
CKD BY: R.DARNELL
SUBMITTED BY: -
DATE: APRIL 2016
SOLICITATION NO.: W9128F-16-B-0007
CONTRACT NO.: -
FILE NAME: MIA8M-703
SIZE: 34X22
PLOT SCALE: AS INDICATED
FILE NUMBER: AF212-220
PLOT DATE: 4/22/16

U.S. ARMY ENGINEER DISTRICT
CORPS OF ENGINEERS
OMAHA, NEBRASKA

BURNS & McDONNELL
8201 NORMAN CENTER DR. #300
BLOOMINGTON, MN 55437
952-656-6003

FY15 P-341 CONSTRUCT ADDITION B1134
MINOT AFB, NORTH DAKOTA
PN: QJVF143101

MECHANICAL CONTROLS

SHEET IDENTIFICATION NUMBER
M-703

4/22/2016 4:11:59 PM
COPYRIGHT © 2016 BURNS & McDONNELL ENGINEERING COMPANY, INC.

AHU-11 CONTROL SEQUENCE

RUN CONDITIONS - SCHEDULED:
THE UNIT SHALL RUN ACCORDING TO A USER DEFINABLE TIME SCHEDULE IN THE FOLLOWING MODES:
- OCCUPIED MODE: THE UNIT SHALL MAINTAIN
  - A 70°F (ADJ.) HEATING SETPOINT.

- UNOCCUPIED MODE (NIGHT SETBACK): THE UNIT SHALL MAINTAIN
  - A 55°F (ADJ.) HEATING SETPOINT.

ALARMS SHALL BE PROVIDED AS FOLLOWS:
- LOW ZONE TEMP: IF THE ZONE TEMPERATURE IS LESS THAN THE HEATING SETPOINT BY A USER DEFINABLE AMOUNT (ADJ.).

EMERGENCY SHUTDOWN:
THE UNIT SHALL SHUT DOWN AND GENERATE AN ALARM UPON RECEIVING AN EMERGENCY SHUTDOWN SIGNAL.

FREEZE PROTECTION:
THE UNIT SHALL SHUT DOWN AND GENERATE AN ALARM UPON RECEIVING A FREEZESTAT STATUS.

RETURN AIR SMOKE DETECTION:
THE UNIT SHALL SHUT DOWN AND GENERATE AN ALARM UPON RECEIVING A RETURN AIR SMOKE DETECTOR STATUS.

SUPPLY FAN:
THE SUPPLY FAN SHALL RUN ANYTIME THE UNIT IS COMMANDED TO RUN, UNLESS SHUTDOWN ON SAFETIES. TO PREVENT SHORT CYCLING, THE SUPPLY FAN SHALL HAVE A USER DEFINABLE (ADJ.) MINIMUM RUNTIME.

ALARMS SHALL BE PROVIDED AS FOLLOWS:
- SUPPLY FAN FAILURE: COMMANDED ON, BUT THE STATUS IS OFF.
- SUPPLY FAN IN HAND: COMMANDED OFF, BUT THE STATUS IS ON.
- SUPPLY FAN RUNTIME EXCEEDED: STATUS RUNTIME EXCEEDS A USER DEFINABLE LIMIT (ADJ.).

HEATING COIL VALVE:
THE CONTROLLER SHALL MEASURE THE ZONE TEMPERATURE AND MODULATE THE HEATING COIL VALVE TO MAINTAIN ITS HEATING SETPOINT.

THE HEATING SHALL BE ENABLED WHENEVER:
- OUTSIDE AIR TEMPERATURE IS LESS THAN °F (ADJ.).
- AND THE ZONE TEMPERATURE IS BELOW HEATING SETPOINT.
- AND THE SUPPLY FAN STATUS IS ON.
- AND THE COOLING IS NOT ACTIVE.

THE HEATING COIL VALVE SHALL OPEN WHENEVER THE FREEZESTAT IS ON.

MIXED AIR DAMPERS:
THE MIXED AIR DAMPERS SHALL OPEN TO PROVIDE MINIMUM OUTSIDE AIR VENTILATION ANYTIME THE UNIT IS OCCUPIED. THE MIXED AIR DAMPERS SHALL CLOSE 5SEC (ADJ.) AFTER THE SUPPLY FAN STOPS.

MINIMUM OUTSIDE AIR VENTILATION - FIXED PERCENTAGE:
THE OUTSIDE AIR DAMPERS SHALL MAINTAIN A MINIMUM POSITION (ADJ.) DURING BUILDING OCCUPIED HOURS AND BE CLOSED DURING UNOCCUPIED HOURS.

PREFILTER HOURS:
THE CONTROLLER SHALL MONITOR THE FAN RUNTIME.

ALARMS SHALL BE PROVIDED AS FOLLOWS:
- PREFILTER CHANGE REQUIRED: PREFILTER HAS BEEN IN USE FOR MORE THAN 2200 HRS (ADJ).

MIXED AIR TEMPERATURE:
THE CONTROLLER SHALL MONITOR THE MIXED AIR TEMPERATURE AND USE AS REQUIRED FOR ECONOMIZER CONTROL (IF PRESENT) OR PREHEATING CONTROL (IF PRESENT).

ALARMS SHALL BE PROVIDED AS FOLLOWS:
- HIGH MIXED AIR TEMP: IF THE MIXED AIR TEMPERATURE IS GREATER THAN 90° F (ADJ.).
- LOW MIXED AIR TEMP: IF THE MIXED AIR TEMPERATURE IS LESS THAN 45°F (ADJ.).

RETURN AIR TEMPERATURE:
THE CONTROLLER SHALL MONITOR THE RETURN AIR TEMPERATURE AND USE AS REQUIRED FOR ECONOMIZER CONTROL (IF PRESENT).

ALARMS SHALL BE PROVIDED AS FOLLOWS:
- HIGH RETURN AIR TEMP: IF THE RETURN AIR TEMPERATURE IS GREATER THAN 90°F (ADJ.).
- LOW RETURN AIR TEMP: IF THE RETURN AIR TEMPERATURE IS LESS THAN 45°F (ADJ.).

SUPPLY AIR TEMPERATURE:
THE CONTROLLER SHALL MONITOR THE SUPPLY AIR TEMPERATURE.

ALARMS SHALL BE PROVIDED AS FOLLOWS:
- HIGH SUPPLY AIR TEMP: IF THE SUPPLY AIR TEMPERATURE IS GREATER THAN 120°F (ADJ.).
- LOW SUPPLY AIR TEMP: IF THE SUPPLY AIR TEMPERATURE IS LESS THAN 45° F (ADJ.).

US ARMY CORPS OF ENGINEERS
OMAHA DISTRICT

SYM.	DATE	DESCRIPTION	SYM.	DATE	DESCRIPTION	APPR.

U.S. ARMY ENGINEER DISTRICT
CORPS OF ENGINEERS
OMAHA, NEBRASKA

BURNS & McDONNELL
8201 NORMAN CENTER DR. #300
BLOOMINGTON, MN 55437
952-656-6003

DESIGNED BY: G.OWSON	DATE: APRIL 2016
DWN BY: G.JOHNSO	CKD BY: R DARNELL
SOLICITATION NO.: W912BF-16-B-0007	
SUBMITTED BY:	CONTRACT NO.: -
FILE NAME: MIA8M-704	FILE NUMBER: AF212-220
SIZE: 34X22	PLOT SCALE: AS INDICATED
PLOT DATE: 4/22/16	

FY15 P-341 CONSTRUCT ADDITION B1134
MINOT AFB, NORTH DAKOTA
PN: QJVF143101

MECHANICAL CONTROLS

SHEET IDENTIFICATION NUMBER
M-704

4/22/2016 4:11:59 PM
COPYRIGHT © 2016 BURNS & McDONNELL ENGINEERING COMPANY, INC.

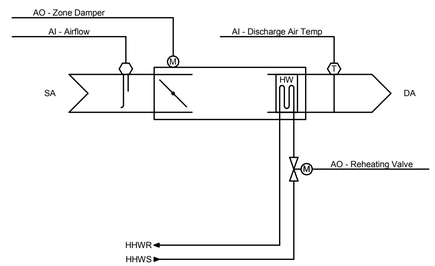

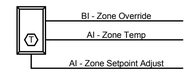

VAV CONTROL SCHEMATIC

POINT NAME	HARD-WARE POINTS: ANALOG IN	ANALOG OUTPUT	BINARY INPUT	BINARY OUTPUT	SOFT-WARE POINTS: ANALOG VALUE	BINARY VALUE	CONTROL LOOP	SCHEDULE	TREND	ALARM	SHOW ON GRAPHIC
ZONE TEMP	•								•		•
ZONE SETPOINT ADJUST	•										•
AIRFLOW	•								•		•
DISCHARGE AIR TEMP	•								•		•
ZONE DAMPER		•									•
REHEATING VALVE		•							•		•
AIRFLOW SETPOINT					•				•		•
HEATING MODE						•			•		
SCHEDULE								•			
HEATING SETPOINT					•				•		•
COOLING SETPOINT					•				•		•
HIGH ZONE TEMP										•	
LOW ZONE TEMP										•	
HIGH DISCHARGE AIR TEMP										•	
LOW DISCHARGE AIR TEMP										•	
TOTALS	4	2	0	0	3	1	0	1	8	4	9
TOTALS	6				17						

VAV CONTROL SEQUENCE

RUN CONDITIONS - SCHEDULED:
THE UNIT SHALL RUN ACCORDING TO A USER DEFINABLE TIME SCHEDULE IN THE FOLLOWING MODES:
- OCCUPIED MODE: THE UNIT SHALL MAINTAIN
- A 74°F (ADJ.) COOLING SETPOINT
- A 70°F (ADJ.) HEATING SETPOINT.

- UNOCCUPIED MODE (NIGHT SETBACK): THE UNIT SHALL MAINTAIN
- A 85°F (ADJ.) COOLING SETPOINT.
- A 55°F (ADJ.) HEATING SETPOINT.

ALARMS SHALL BE PROVIDED AS FOLLOWS:
- HIGH ZONE TEMP: IF THE ZONE TEMPERATURE IS GREATER THAN THE COOLING SETPOINT BY A USER DEFINABLE AMOUNT (ADJ.).
- LOW ZONE TEMP: IF THE ZONE TEMPERATURE IS LESS THAN THE HEATING SETPOINT BY A USER DEFINABLE AMOUNT (ADJ.).

ZONE SETPOINT ADJUST:
THE OCCUPANT SHALL BE ABLE TO ADJUST THE ZONE TEMPERATURE HEATING AND COOLING SETPOINTS AT THE ZONE SENSOR.

ZONE OPTIMAL START:
THE UNIT SHALL USE AN OPTIMAL START ALGORITHM FOR MORNING START-UP. THIS ALGORITHM SHALL MINIMIZE THE UNOCCUPIED WARM-UP OR COOL-DOWN PERIOD WHILE STILL ACHIEVING COMFORT CONDITIONS BY THE START OF SCHEDULED OCCUPIED PERIOD.

REVERSING VARIABLE VOLUME TERMINAL UNIT - FLOW CONTROL:
THE UNIT SHALL MAINTAIN ZONE SETPOINTS BY CONTROLLING THE AIRFLOW THROUGH ONE OF THE FOLLOWING:

OCCUPIED:

- WHEN ZONE TEMPERATURE IS GREATER THAN ITS COOLING SETPOINT, THE ZONE DAMPER SHALL MODULATE BETWEEN THE MINIMUM OCCUPIED AIRFLOW (ADJ.) AND THE MAXIMUM COOLING AIRFLOW (ADJ.) UNTIL THE ZONE IS SATISFIED.
- WHEN THE ZONE TEMPERATURE IS BETWEEN THE COOLING SETPOINT AND THE HEATING SETPOINT, THE ZONE DAMPER SHALL MAINTAIN THE MINIMUM REQUIRED ZONE VENTILATION (ADJ.).
- WHEN ZONE TEMPERATURE IS LESS THAN ITS HEATING SETPOINT, THE CONTROLLER SHALL ENABLE HEATING TO MAINTAIN THE ZONE TEMPERATURE AT ITS HEATING SETPOINT. ADDITIONALLY, IF WARM AIR IS AVAILABLE FROM THE AHU, THE ZONE DAMPER SHALL MODULATE BETWEEN THE MINIMUM OCCUPIED AIRFLOW (ADJ.) AND THE MAXIMUM HEATING AIRFLOW (ADJ.) UNTIL THE ZONE IS SATISFIED.

UNOCCUPIED:

- WHEN THE ZONE IS UNOCCUPIED THE ZONE DAMPER SHALL CONTROL TO ITS MINIMUM UNOCCUPIED AIRFLOW (ADJ.).
- WHEN THE ZONE TEMPERATURE IS GREATER THAN ITS COOLING SETPOINT, THE ZONE DAMPER SHALL MODULATE BETWEEN THE MINIMUM UNOCCUPIED AIRFLOW (ADJ.) AND THE MAXIMUM COOLING AIRFLOW (ADJ.) UNTIL THE ZONE IS SATISFIED.
- WHEN ZONE TEMPERATURE IS LESS THAN ITS UNOCCUPIED HEATING SETPOINT, THE CONTROLLER SHALL ENABLE HEATING TO MAINTAIN THE ZONE TEMPERATURE AT THE SETPOINT. ADDITIONALLY, IF WARM AIR IS AVAILABLE FROM THE AHU, THE ZONE DAMPER SHALL MODULATE BETWEEN THE MINIMUM UNOCCUPIED AIRFLOW (ADJ.) AND THE AUXILIARY HEATING AIRFLOW (ADJ.) UNTIL THE ZONE IS SATISFIED.

REHEATING COIL VALVE:
THE CONTROLLER SHALL MEASURE THE ZONE TEMPERATURE AND MODULATE THE REHEATING COIL VALVE OPEN ON DROPPING TEMPERATURE TO MAINTAIN ITS HEATING SETPOINT.

DISCHARGE AIR TEMPERATURE:
THE CONTROLLER SHALL MONITOR THE DISCHARGE AIR TEMPERATURE.

ALARMS SHALL BE PROVIDED AS FOLLOWS:
- HIGH DISCHARGE AIR TEMP: IF THE DISCHARGE AIR TEMPERATURE IS GREATER THAN 100°F (ADJ.).
- LOW DISCHARGE AIR TEMP: IF THE DISCHARGE AIR TEMPERATURE IS LESS THAN 40°F (ADJ.).

US ARMY CORPS OF ENGINEERS
OMAHA DISTRICT

SYM.	DATE	DESCRIPTION	APPR.

SYM.	DATE	DESCRIPTION	APPR.

U.S. ARMY ENGINEER DISTRICT
CORPS OF ENGINEERS
OMAHA, NEBRASKA

BURNS & McDONNELL
8201 NORMAN CENTER DR. #300
BLOOMINGTON, MN 55437
952-656-6003

DESIGNED BY: G.JOHNSON
DWN BY: C.KO
CKD BY: G.JOHNSON
SUBMITTED BY: R.DARNELL
DATE: APRIL 2016
SOLICITATION NO.: W912BF-16-B-0007
CONTRACT NO.: -
FILE NAME: M4BM-705
FILE NUMBER: AF212-220
SIZE: 34X22
PLOT SCALE: AS INDICATED
PLOT DATE: 4/22/16

FY15 P-341 CONSTRUCT ADDITION B1134
MINOT AFB, NORTH DAKOTA
PN: QJVF143101

MECHANICAL CONTROLS

SHEET IDENTIFICATION NUMBER
M-705

4/22/2016 4:12:00 PM
COPYRIGHT © 2016 BURNS & McDONNELL ENGINEERING COMPANY, INC.

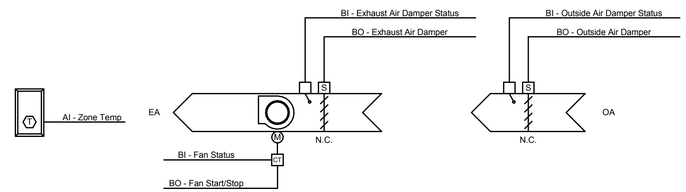

EF-1,2 CONTROL SCHEMATIC

POINT NAME	ANALOG IN	ANALOG OUTPUT	BINARY INPUT	BINARY OUTPUT	ANALOG VALUE	BINARY VALUE	CONTROL LOOP	SCHEDULE	TREND	ALARM	SHOW ON GRAPHIC
	HARD-WARE POINTS				SOFT-WARE POINTS						
ZONE TEMP	•								•		•
EXHAUST AIR DAMPER STATUS			•						•		•
OUTSIDE AIR DAMPER STATUS			•						•		•
FAN STATUS			•						•		•
FAN START/STOP				•					•		•
EXHAUST AIR DAMPER				•					•		•
OUTSIDE AIR DAMPER				•					•		•
COOLING SETPOINT					•				•		•
EMERGENCY SHUTDOWN						•			•	•	•
HIGH ZONE TEMP										•	
EXHAUST AIR DAMPER FAILURE										•	
EXHAUST AIR DAMPER OVERRIDE										•	
OUTSIDE AIR DAMPER FAILURE										•	
OUTSIDE AIR DAMPER OVERRIDE										•	
FAN FAILURE										•	
FAN IN HAND										•	
FAN RUNTIME EXCEEDED										•	
TOTALS	1	0	3	3	1	1	0	0	9	9	9
TOTALS	7				20						

EF-1,2 CONTROL SEQUENCE

RUN CONDITIONS - CONTINUOUS:
THE UNIT SHALL BE CONTINUOUSLY ENABLED TO MAINTAIN A ZONE TEMPERATURE COOLING SETPOINT OF 85°F (ADJ.).
EF-1,2 DAMPERS SHALL BE INTERLOCKED WITH IH-1,2 DAMPERS.

ALARMS SHALL BE PROVIDED AS FOLLOWS:
- HIGH ZONE TEMP: IF THE ZONE TEMPERATURE IS GREATER THAN THE COOLING SETPOINT BY A USER DEFINABLE AMOUNT (ADJ.).

EMERGENCY SHUTDOWN:
THE UNIT SHALL SHUT DOWN AND GENERATE AN ALARM UPON RECEIVING AN EMERGENCY SHUTDOWN SIGNAL.

FAN:
THE FAN SHALL RUN ANYTIME THE ZONE TEMPERATURE RISES ABOVE COOLING SETPOINT, UNLESS SHUTDOWN ON SAFETIES.

EXHAUST AIR DAMPER:
THE EXHAUST AIR DAMPER SHALL OPEN ANYTIME THE EXHAUST FAN RUNS AND SHALL CLOSE ANYTIME THE FAN STOPS. THE EXHAUST AIR DAMPER SHALL CLOSE 30 SEC (ADJ.) AFTER THE FAN STOPS.

OUTSIDE AIR DAMPER:
THE OUTSIDE AIR DAMPER SHALL OPEN ANYTIME THE EXHAUST FAN RUNS AND SHALL CLOSE ANYTIME THE FAN STOPS. THE OUTSIDE AIR DAMPER SHALL CLOSE 30 SEC (ADJ.) AFTER THE FAN STOPS.

DAMPER STATUS:
THE FAN SHALL BE ENABLED AFTER THE DAMPER STATUS HAS PROVEN.

ALARMS SHALL BE PROVIDED AS FOLLOWS:
- DAMPER FAILURE: COMMANDED OPEN, BUT THE STATUS IS CLOSED.
- DAMPER OVERRIDE: COMMANDED CLOSED, BUT THE STATUS IS OPEN.

FAN STATUS:
THE CONTROLLER SHALL MONITOR THE FAN STATUS.

ALARMS SHALL BE PROVIDED AS FOLLOWS:
- FAN FAILURE: COMMANDED ON, BUT THE STATUS IS OFF.
- FAN IN HAND: COMMANDED OFF, BUT THE STATUS IS ON.
- FAN RUNTIME EXCEEDED: FAN STATUS RUNTIME EXCEEDS A USER DEFINABLE LIMIT (ADJ.).

US ARMY CORPS OF ENGINEERS
OMAHA DISTRICT

SYM.	DATE	DESCRIPTION	APPR.	SYM.	DATE	DESCRIPTION	APPR.

DESIGNED BY: G.JOHNSON
DWN BY: G.JOHNSO
CKD BY: R.DARNELL
SUBMITTED BY: -
DATE: APRIL 2016
SOLICITATION NO.: W912BF-16-B-0007
CONTRACT NO.: -
FILE NAME: M4BM-706
FILE NUMBER: AF212-220
SIZE: 34X22
PLOT SCALE: AS INDICATED
PLOT DATE: 4/22/16

U.S. ARMY ENGINEER DISTRICT
CORPS OF ENGINEERS
OMAHA, NEBRASKA

BURNS & McDONNELL
8201 NORMAN CENTER DR. #300
BLOOMINGTON, MN 55437
952-656-6003

FY15 P-341 CONSTRUCT ADDITION B1134
MINOT AFB, NORTH DAKOTA
PN: QJVF143101

MECHANICAL CONTROLS

SHEET IDENTIFICATION NUMBER
M-706

4/22/2016 4:12:01 PM
COPYRIGHT © 2016 BURNS & McDONNELL ENGINEERING COMPANY, INC.

SYMBOLS - POWER

- RECESSED RECEPTACLE, SIMPLEX OUTLET NEMA 5-20R, +18" AFF, UON.
- GFI — RECESSED RECEPTACLE, DUPLEX OUTLET NEMA 5-20R, +18" AFF, UON. GFI=GROUND FAULT CIRCUIT INTERRUPTER.
- WPIU — RECESSED RECEPTACLE, DUPLEX, NEMA 5-20R, WITH INTEGRAL GROUND FAULT CIRCUIT INTERRUPTER WITH WEATHERPROOF WHILE IN USE COVER MOUNTED 24" AFF UON.
- TV — RECESSED TELEVISION RECEPTACLE, DUPLEX, NEMA 5-20R, +84" AFF, UON.
- 120 VAC, 20A NEMA 5-20R DOUBLE DUPLEX RECEPTACLE-RECESS MOUNTED 18" AFF, UON.
- NEMA 5-20R DUPLEX RECEPTACLE-SURFACE MOUNTED.
- SPECIAL PURPOSE RECEPTACLE. SEE PLANS FOR TYPE AND DESCRIPTION.
- C — RECEPTACLE, DUPLEX OUTLET NEMA 5-20R. MOUNT RECESSED IN CEILING TILE.
- PANELBOARD, SURFACE MOUNTED.
- T — TRANSFORMER, DRY TYPE, SIZE AS INDICATED.
- LP1/X — DENOTES CIRCUIT NUMBER; J — JUNCTION BOX; EF/X — DENOTES EQUIPMENT TAG
- START/STOP, MOMENTARY CONTACT PUSHBUTTON SWITCH
- D30/F30 — DISCONNECT SWITCH, 3-POLE, NEMA 1 ENCLOSURE, 30A RATING, UON.
- FUSE SIZE
- DS30/F30 — COMBINATION FULL VOLTAGE, NON-REVERSING MOTOR STARTER AND DISCONNECT SWITCH, SURFACE MOUNTED, NEMA 1, UON. PROVIDE HAND-OFF-AUTO SWITCH IN COVER
- FUSE SIZE (IF INDICATED)
- AMPACITY
- TYPE (D=DISCONNECT, S=STARTER)
- $ m — SWITCH, MOTOR RATED, WITH THERMAL OVERLOADS

SYMBOLS - LIGHTING

- FLUORESCENT RECESSED, SURFACE, WALL, OR CEILING MOUNTED FIXTURE AS INDICATED ON LIGHTING FIXTURE SCHEDULE
- PENDANT MOUNTED LIGHT FIXTURE, OR AS INDICATED ON FIXTURE SCHEDULE.
- SURFACE MOUNTED FLUORESCENT STRIP, OR AS INDICATED ON FIXTURE SCHEDULE.
- RECESSED, CEILING MOUNTED, COMPACT FLUORESCENT
- LIGHTED EXIT SIGN, SINGLE FACE, WALL MOUNTED. ARROW DENOTES DIRECTION OF EGRESS. NO ARROW DENOTES NO EGRESS DIRECTION.
- LIGHTED EXIT SIGN, SINGLE FACE, CEILING MOUNTED. ARROW DENOTES DIRECTION OF EGRESS. NO ARROW DENOTES NO EGRESS DIRECTION.
- LIGHTED EXIT SIGN, DOUBLE FACE. ARROWS DENOTE DIRECTION OF EGRESS.
- OS — OCCUPANCY SENSOR - CEILING MOUNTED

SYMBOLS - LIGHTING (CONT.)

- $ — SWITCH, TOGGLE, WALL MOUNTED. MOUNT 54" AFF,UON.
- $ 3 — SWITCH, TOGGLE, WALL MOUNTED, THREE WAY. MOUNT 54" AFF,UON.
- $ D — DIMMING SWITCH, MOUNT 48" AFF,UON.
- $ a,b — LOWER CASE LETTER DENOTES CONTROL OF FIXTURE WITH SAME LETTER.
- LP1/1, F1 — CAPITAL LETTER DENOTES TYPE IN FIXTURE SCHEDULE; INDICATES FIXTURE CIRCUITED WITH BATTERY BACK-UP
- a, BL — LOWER CASE LETTER, UPPER CASE 'BL' DENOTES SWITCH WITH SAME MARKER OPERATES THIS FIXTURE
- CIRCUIT NUMBER DESIGNATOR

SYMBOLS - CONDUIT

- CONDUIT AND WIRE TURNING UP
- CONDUIT AND WIRE TURNING DOWN
- WIRE IN CONDUIT, RUN SURFACE MOUNT IN CEILING OR IN SLAB.
- WIRE IN CONDUIT, RUN CONCEALED ABOVE CEILING OR IN WALL.
- WIRE IN CONDUIT ROUTE BELOW GRADE OR FLOOR SLAB.

SYMBOLS - GROUNDING/LIGHTNING PROTECTION

- GROUND ROD
- R — GROUND RECEPTACLE
- GROUND TEST WELL
- M — LIGHTNING PROTECTION MAST
- GROUND BUS BAR
- GROUND CONNECTION
- G — GROUND COUNTERPOISE
- EXOTHERMIC WELDED GROUND CONNECTION

SYMBOLS - SECURITY

- MS — MOTION SENSOR, CEILING MOUNT
- BMS — BALANCED MAGNETIC SWITCH
- KP J — KEY PAD, 54" AFF, WALL MOUNT
- S — SENTROL IDS DOOR CONTACT. -PROVIDE JUNCTION BOX ROUGH-IN ONLY, DOOR CONTACT GFGI

SYMBOLS - SCHEMATIC

- SWITCH
- CIRCUIT BREAKER, MOLDED CASE, TRIP CURRENT AND QUANTITY OF POLES [P] SHOWN NEXT TO SYMBOL
- FUSE
- SWITCH, DISCONNECT, FUSED, LOAD BREAK, FUSE AMPERE RATING AND FUSE TYPE SHOWN NEXT TO SYMBOL.
- MOTOR THERMAL OVERLOAD PROTECTOR
- POWER TRANSFORMER. KVA RATING, WINDING VOLTAGES, AND CONNECTIONS ARE SHOWN NEXT TO SYMBOL.
- GROUNDING CONNECTION. WHEN USED WITH TRANSFORMER SYMBOL IT DENOTES A NEUTRAL GROUNDING CONNECTION
- GROUNDED WYE WINDING CONNECTION
- DELTA WINDING CONNECTION
- SEPARABLE CONNECTOR OR CONNECTION FOR DRAWOUT ASSEMBLIES
- NORMALLY OPEN CONTACTS
- NORMALLY CLOSED CONTACTS
- CURRENT TRANSFORMER. PRIMARY TO SECONDARY RATIO SHOWN NEXT TO SYMBOL.
- POTENTIAL TRANSFORMER. PRIMARY TO SECONDARY RATIO SHOWN NEXT TO SYMBOL.
- CONNECTION
- H O A — HAND/OFF/AUTOMATIC MAINTAINED POSITION SELECTOR SWITCH
- INDICATING LIGHT (G=GREEN/MOTOR RUNNING; R=RED/MOTOR STOPPED)
- M — MOTOR
- M01 — RELAY OR CONTACTOR COIL
- VS — THREE-PHASE VOLTMETER SWITCH
- AS — THREE-PHASE AMMETER SWITCH
- V — VOLTMETER
- A — AMMETER
- M — MULTI-FUNCTION DIGITAL METER
- SPD — SURGE PROTECTION DEVICE

GENERAL NOTES

1. SYMBOL ORIENTATION DOES NOT IMPLY DEVICE OR EQUIPMENT ORIENTATION. UNLESS NOTED AS SUCH. SEE REFLECTED CEILING PLANS FOR LIGHT FIXTURE POSITIONS AND ORIENTATIONS.
2. SYMBOL SIZE DOES NOT IMPLY EQUIPMENT SIZE, UON.
3. MOUNTING HEIGHT INDICATED IN LEGEND AND ON THE DRAWINGS SHALL BE THE DISTANCE MEASURED FROM THE CENTER OF THE DEVICE TO THE FINISHED FLOOR EXCEPT LIGHTING FIXTURES AS NOTED BELOW.
4. NOT ALL SYMBOLS ARE USED.
5. ALL RECEPTACLES INDICATED WITH A "WP" SUBSCRIPT SHALL BE GFCI AND INSTALLED WITH A CAST, GASKETED, AND "WHILE IN USE COVER."
6. SWITCHBOARD AND PANEL BOARDS SHALL BE FIELD MARKED TO WARN QUALIFIED PERSONS OF POTENTIAL ELECTRIC ARC FLASH HAZARD IN ACCORDANCE WITH THE REQUIREMENTS OF NEC ARTICLE 110.16.
7. ELECTRICAL CONTRACTOR SHALL COORDINATE WITH MECHANICAL CONTRACTOR WITH ACTUAL EQUIPMENT PROVIDED.
8. ALL CONDUITS SHALL BE CONCEALED UNLESS OTHERWISE NOTED ON PLAN, OR IN SCHEDULE.
9. MOUNTING HEIGHT FOR LIGHT FIXTURES SHALL BE FROM THE BOTTOM OF FIXTURES TO THE FINISHED FLOOR.
10. FURNITURE LAYOUT SHOWN AS DASHED HALF TONE ON THE POWER AND COMMUNICATIONS PLANS IS THE SUGGESTED LAYOUT OF GOVERNMENT FURNISHED FURNITURE. THE CONTRACTOR SHALL COORDINATE WITH THE CONTRACTING OFFICER FOR FINAL APPROVED FFE PACKAGE AND SHALL ADJUST FINAL ELECTRICAL AND COMMUNICATION DEVICE LOCATIONS WITH INSTALLED FURNITURE PACKAGE.
11. ALL FLOOR MOUNTED ELECTRICAL EQUIPMENT (I.E. PANELBOARDS, SWITCHBOARDS, TRANSFORMERS, ETC.) SHALL BE INSTALLED ON UTILITY HOUSEKEEPING PAD.

SYMBOL MODIFIERS

AC	ABOVE COUNTER
C	RECESSED IN CEILING
EP / EXP	EXPLOSION PROOF
F	RECESSED IN FLOOR
GFI	GROUND FAULT CIRCUIT INTERRUPTER
IG	ISOLATED GROUND
P	PILOT LIGHT (INDICATING SWITCH IS ON)
W	WALL MOUNTED, 48" AFF
WP	WEATHERPROOF
WPIU	WEATHERPROOF IN USE

SYMBOLS - COMMUNICATIONS

- # — COMMUNICATIONS OUTLET BOX. NUMBER INDICATES OUTLET TYPE. MOUNT 18" AFF UON. SEE E-503 FOR DETAILS.
- WAP C — WIRELESS ACCESS POINT (WAP). CEILING MOUNTED
- HL — HOT LINE TELEPHONE, MOUNT AT 54" AFF. BOX ROUGH-IN ONLY
- TV — SINGLE-GANG OUTLET BOX FOR CATV. 1"C. TO NEAREST CABLE TRAY. MOUNT 60" AFF UON. FACEPLATE AND CABLING GFGI
- CABLE TRAY. TYPE AND MOUNTING HEIGHT AS INDICATED ON COMMUNICATION PLANS IS TO CENTER OF TRAY. "XX" INDICATES TRAY TYPE, WHERE:
  - BT = BASKET TRAY
  - CR = CABLE RUNWAY
  - HEIGHT INDICATED IS TO BOTTOM OF TRAY
  - 4"W X 12"D XX 11'-0" AFF
- J — JUNCTION BOX, WALL MOUNTED 18" AFF, UON.
- J — JUNCTION BOX, MOUNTED ABOVE CEILING, UON.
- TELECOMMUNICATIONS GROUND BUS
- DATA RACK.

US ARMY CORPS OF ENGINEERS
OMAHA DISTRICT

SYM.	DATE	DESCRIPTION	APPR.	SYM.	DATE	DESCRIPTION	APPR.

DESIGNED BY: K WILSON | DATE: APRIL 2016
DWN BY: E KREINER | CKD BY: M CUBBIE | SOLICITATION NO.: W912BF-16-B-0007
SUBMITTED BY: - | CONTRACT NO.: -
FILE NAME: MIA8E-001 | FILE NUMBER: AF212-220
SIZE: 34X22 | PLOT SCALE: AS INDICATED | PLOT DATE: 4/22/16

U.S. ARMY ENGINEER DISTRICT CORPS OF ENGINEERS OMAHA, NEBRASKA

BURNS & McDONNELL
8201 NORMAN CENTER DR. #300
BLOOMINGTON, MN 55437
952-656-6003

FY15 P-341 CONSTRUCT ADDITION B1134
MINOT AFB, NORTH DAKOTA
PN: QJVF143101

ELECTRICAL SYMBOLS LEGEND - 1 OF 2

SHEET IDENTIFICATION NUMBER
E-001

4/25/2016 4:18:18 AM
COPYRIGHT © 2016 BURNS & McDONNELL ENGINEERING COMPANY, INC.

EXISTING CONDITIONS

1. THE ELECTRICAL CONTRACTOR SHALL VISIT THE SITE AND BECOME FAMILIAR WITH THE EXISTING CONDITIONS PRIOR TO COMMENCING WORK.
2. UNLESS INDICATED AS EXISTING, ALL MATERIALS AND LABOR SHALL BE CONSIDERED NEW.
3. ALL EXISTING EQUIPMENT AND DEVICES TO REMAIN SHALL STAY IN-TACT AND OPERATIONAL DURING THE CONSTRUCTION PROCESS. IF A DEVICE REQUIRING POWER IS DISTURBED OR INTERRUPTED, RESTORE THE DEVICE TO IT'S ORIGINAL OPERATIONAL STATE. ANY DEMOLITION WORK REQUIRING MODIFICATION OF EXISTING ELECTRICAL SYSTEMS SHALL NOT COMPROMISE THE SYSTEMS TO REMAIN. INSTALL NEW CONDUIT AND WIRING WHERE NECESSARY TO RESTORE POWER PER NEC REQUIREMENTS.
4. ALL ELECTRICAL EQUIMENT AND DEVICES TO BE REMOVED: COMPLETELY REMOVE ALL CONDUCTORS AND CONDUIT TO THE DEVICE. WHERE CONDUIT REMOVAL IS NOT POSSIBLE, CAP CONDUIT AND MAKE SAFE. WHERE BACKBOXES CAN NOT BE REMOVED, PROVIDE A BLANK COVERPLATE. ALL REMOVED CONDUIT, OLD BOXES, WIRING AND MISCELLANEOUS ELECTRICAL SCRAP SHALL BE REMOVED FROM THE JOB SITE.
5. THE CONTRACTOR SHALL BE RESPONSIBLE TO RESTORE ALL INTERIOR/EXTERIOR WALLS, CEILINGS, FLOORS, AND CONCRETE WORK REQUIRING PATCHING, PLASTERING, PAINTING AND ANY OTHER REPAIRS DUE TO ELECTRICAL WORK TO RESTORE THE ORIGINAL FINISH AND APPEARANCE.

GENERAL NOTES

1. ALL CONDUCTORS SHALL BE RUN IN CONDUIT, AND ALL CONDUIT SHALL BE CONCEALED UNLESS OTHERWISE NOTED ON THE DRAWINGS.
2. ALL EXISTING AND NEW SWITCHBOARDS AND PANELBOARDS SHALL BE FIELD MARKED TO WARN QUALIFIED PERSONS OF POTENTIAL ELECTRIC ARC FLASH HAZARD IN ACCORDANCE WITH NFPA 70 AND 70E.
3. ELECTRICAL SUBCONTRACTOR SHALL COORDINATE WITH MECHANICAL CONTRACTOR REGARDING ELECTRICAL REQUIREMENTS OF ACTUAL EQUIPMENT PROVIDED.
4. MOUNTING HEIGHT FOR LIGHT FIXTURES SHALL BE FROM THE BOTTOM OF FIXTURES TO THE FINISHED FLOOR.
5. ALL SYSTEMS THAT REQUIRE COORDINATION BETWEEN TRADES SHALL BE TO THE SATISFACTION OF THE CONTRACTING OFFICER. ANY DEFICIENCIES, INCONSISTENCIES, OR POORLY COORDINATED INSTALLATIONS SHALL BE CORRECTED BY THE CONTRACTOR AT NO EXTRA COST TO THE GOVERNMENT.
6. ALL ELECTRICAL WORK SHALL COMPLY WITH NEC (NFPA 70), NFPA 72, NFPA 101, AND APPLICABLE MILITARY CODES OR TECHNICAL LETTERS, IN ADDITION TO LOCAL CODES AND ORDINANCES. ALL GROUNDING SHALL COMPLY WITH NFPA 70, ART. 250 AND AFI 32-1065.
7. PROVIDE A GREEN CONTINUOUS INSULATED EQUIPMENT GROUNDING CONDUCTOR TO ALL ELECTRICAL, TELECOMMUNICATIONS AND SECURITY EQUIPMENT SIZED PER NEC 250.122

DEMOLITION NOTES

1. THE ELECTRICAL DEMOLITION SHEETS SHOW EXISTING CONDITIONS THAT HAVE BEEN PREPARED BASED ON FIELD OBSERVATIONS AND ORIGINAL DRAWINGS. ADDITIONAL COMPONENTS AND CONDITIONS THAT ARE NOT SHOWN ON THE DRAWINGS MAY EXIST AND MAY REQUIRE CERTAIN REMODELING OR ADJUSTMENTS THAT ARE NOT NOTED ON THE DRAWINGS. FIELD VERIFY THE LOCATIONS OF ALL EXISTING EQUIPMENT AND DEVICES SHOWN ON THE DRAWINGS PRIOR TO BIDDING.
2. ALL ELECTRICAL DEVICES, CONDUIT, FIXTURES, PANELBOARDS FROM THE EXISTING FACILITY SHALL BE REMOVED AS INDICATED UNLESS OTHERWISE NOTED AND PROPERLY DISPOSED OF. COORDINATE WITH ARCHITECTURAL PLANS.
3. OBTAIN WRITTEN PERMISSION FROM THE CONTRACTING OFFICER PRIOR TO SHUTTING OFF SERVICES OR SYSTEMS WHICH MAY AFFECT OTHER AREAS BEYOND THE LIMITS OF THE DEMOLITION AREA.
4. NOT ALL EXISTING UTILITIES AND OR ELECTRICAL SYSTEMS ARE SHOWN ON PLANS. CONTRACTOR IS RESPONSIBLE FOR FIELD VERIFICATION OF ALL EXISTING CONDITIONS PRIOR TO COMMENCING WORK. COORDINATE WITH THE CONTRACTING OFFICER PRIOR TO COMMENCING WORK.

TYPICAL DEVICE MOUNTING DETAIL

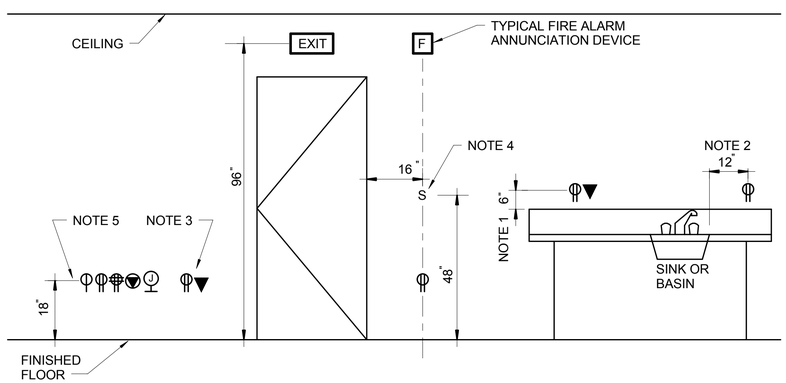

ABBREVIATIONS

A	AMPERES
AFB	AIR FORCE BASE
AC	ALTERNATING CURRENT
AFB	AIR FORCE BASE
AFF	ABOVE FINISHED FLOOR
AIC	AMPERES INTERRUPTING CAPACITY
AV	AUDIO/VIDEO
AWG	AMERICAN WIRE GAUGE
BAS	BUILDING AUTOMATION SYSTEM
C	CONDUIT
CAT	CATEGORY
CATV	CABLE TELEVISION
CBP	COPPER BACKBONE PATCH PANEL
CCN	CLASSIFIED NETWORK (FIBER) FOR OTHERS
CCTV	CLOSED CIRCUIT TELEVISION
CH	CHILLED WATER
CL	CENTERLINE
COMM	COMMUNICATIONS
CPP	COPPER HORIZONTAL PATCH PANEL
CT	CABLE TRAY
CU	COPPER
CO	COPIER
CW	CONDENSER WATER
DC	DIRECT CURRENT
DDC	DIRECT DIGITAL CONTROL
EC	EMPTY CONDUIT
EF	EXHAUST FAN
EGC	EQUIPMENT GROUNDING CONDUCTOR
EIA	ELECTRONICS INDUSTRIES ASSOCIATIONS
EM/NL	EMERGENCY / NIGHT LIGHT
EMT	ELECTRICAL METALLIC TUBING
EPO	EMERGENCY POWER OFF
ETR	EXISTING TO REMAIN
EX	EXISTING
EXP	EXPLOSION PROOF
FAAP	FIRE ALARM ANNUNCIATOR PANEL
FACP	FIRE ALARM CONTROL PANEL
FBO	FURNISHED BY OTHERS
FO	FIBER OPTIC
FPD	FLAT PANEL DISPLAY
FPP	FIBER OPTIC PATCH PANEL
FT	FEET OR FOOT
GCE	GULF COAST ELECTRIC
GFGI	GOVERNMENT FURNISHED AND INSTALLED
GFI	GROUND FAULT INTERRUPTER
G OR GND	GROUND
GFE	GOVERNMENT FURNISHED EQUIPMENT
GFR	GROUND FAULT RELAY
GFP	GROUND FAULT PROTECTION
GRS	GALVANIZED RIGID STEEL CONDUIT
HID	HIGH INTENSITY DISCHARGE
HZ	HERTZ
IDS	INTRUSION DETECTION SYSTEM
IG	ISOLATED GROUND
K	KILO
KCMIL	THOUSAND CIRCULAR MILS
KV	KILOVOLT AMPERES
KWH	KILOWATT HOURS
LC	LIGHTING CONTACTOR
LP	LIGHTNING PROTECTION
LW	LOCKABLE WIREWAY
MAX	MAXIMUM
MCB	MAIN CIRCUIT BREAKER
MDP	MAIN DISTRIBUTION PANEL
MEGB	MAIN ELECTRICAL GROUND BUS
MH	MANHOLE
MLO	MAIN LUGS ONLY
MM	MULTIMODE
MN/PA	MASS NOTIFICATION/PUBLIC ADDRESS
MTD	MOUNTED
N	NEUTRAL CONDUCTOR
N.C.	NORMALLY CLOSED
NEC	NATIONAL ELECTRICAL CODE
NEMA	NATIONAL ELECTRICAL MANUFACTURER'S ASSOCIATION
NFPA	NATIONAL FIRE PROTECTION ASSOCIATION
NIC	NOT IN CONTRACT
NIPR	NON-CLASSIFIED INTERNET PROTOCOL ROUTING
NL	NIGHT LIGHT
N.O.	NORMALLY OPEN
NTS	NOT TO SCALE
OC	ON CENTER
P	POLE
PDU	POWER DISTRIBUTION UNIT
PIV	POST INDICATOR VALVE
PR	PAIR
PVC	POLYVINYL CHLORIDE
RGS	RIGID GALVANIZED STEEL CONDUIT
RL	RELOCATE
RM	ROOM
RN	REPLACE WITH NEW
RMC	RIGID METAL CONDUIT
RW	REWORK
SCCR	SHORT CIRCUIT CURRENT RATING
SCI	SENSITIVE COMPARTMENTALIZED INFORMATION
SCIF	SENSITIVE COMPARTMENTALIZED INFORMATION FACILITY
ScTP	SHIELDED TWISTED PAIR
SIPR	SECRET INTERNET PROTOCOL ROUTING
SM	SINGLE MODE
SPD	SURGE PROTECTION DEVICE
SPECS	CONTRACT SPECIFICATIONS
SPST	SINGLE POLE SINGLE THROW
SRG	STATIC REFERENCE GRID
STR	STRAND
T	TRANSFORMER
TB	TELEPHONE BACKBOARD
TECH	TECHNICIAN
TMGB	TELECOMMUNICATION MAIN GROUND BUS
TGB	TELECOMMUNICATION GROUND BUS
TPN	TOOL PARTS NETWORK
TR	TELECOMMUNICATIONS ROOM
TVSS	TRANSIENT VOLTAGE SURGE SUPPRESSION
TYP	TYPICAL
UL	UNDERWRITERS' LABORATORIES
UON	UNLESS OTHERWISE NOTED
UTP	UNSHIELDED TWISTED PAIR
V	VOLTS
VA	VOLT AMPERES
VFD	VARIABLE FREQUENCY DRIVE
W	WIRE OR WATT
WAP	WIRELESS ACCESS POINT
WP	WEATHERPROOF
XFMR	TRANSFORMER
XRL	EXISTING TO BE RELOCATED
Z	IMPEDANCE

DEVICE MOUNTING NOTES:

1. COORDINATE ABOVE COUNTER DEVICES AND RECEPTACLES WITH CASEWORK OR COUNTERS SUCH THAT THE DEVICES AND RECEPTACLES ARE LOCATED AT +42" AFF OR 6" ABOVE THE COUNTERTOP OR BACKSPLASH, WHICHEVER IS HIGHER
2. ALL RECEPTACLES INSTALLED WITHIN 6'-0" OF ANY SINK OF BASIN SHALL HAVE GFI PROTECTION. DO NOT INSTALL RECEPTACLES WITHIN 12" OF THE EDGE OF A SINK OR BASIN
3. COORDINATE WITH THE COMMUNICATIONS DRAWINGS TO ENSURE THAT A DUPLEX RECEPTACLE IS INSTALLED WITHIN 18" HORIZONTAL TO ALL SIGNAL AND DATA DEVICE LOCATIONS
4. SWITCHES AND OTHER FLUSH WALL-MOUNTED DEVICES SHALL BE MOUNTED WITHIN 16" OF DOORFRAME. COORDINATE WITH ARCHITECTURAL DRAWINGS FOR DOORS WITH ADJACENT SIDELIGHTS. WHERE DEVICES ARE SHOWN ADJACENT TO THE DOOR ON THE HINGE-SIDE OF THE DOOR, AND THE DOOR SWINGS IN A MANNER THAT SHALL BLOCK THE DEVICE, MOUNT THE DEVICE 12" BEYOND THE DOOR SWING. COORDINATE ROUGH-IN LOCATIONS WITH DIV. 27 AND 28 DEVICES AS WELL. COORDINATE MOUNTING LOCATION WITH OTHER TRADES TO ENSURE A UNIFORM MOUNTING AND AESTHETICALLY-PLEASING APPEARANCE.
5. MOUNTING HEIGHT INDICATED IN LEGEND AND ON THE DRAWINGS SHALL BE THE DISTANCE MEASURED FROM THE CENTER OF THE DEVICE TO THE FINISHED FLOOR.

TYPICAL DEVICE MOUNTING HEIGHTS:

REF	REFRIGERATOR, +48" AFF
VM	VENDING MACHINE, +24" AFF
CO	COPIER, +18" AFF
AC	ABOVE COUNTER, SEE "DEVICE MOUNTING NOTES", NOTE 1 ABOVE

US ARMY CORPS OF ENGINEERS
OMAHA DISTRICT

SYM.	DATE	DESCRIPTION	APPR.	SYM.	DATE	DESCRIPTION	APPR.

U.S. ARMY ENGINEER DISTRICT
CORPS OF ENGINEERS
OMAHA, NEBRASKA

BURNS & McDONNELL
8201 NORMAN CENTER DR. #300
BLOOMINGTON, MN 55437
952-656-6003

DESIGNED BY: K. WILSON
DWN BY: E.KREINER
CKD BY: U. MK/DBBE
SUBMITTED BY: -
DATE: APRIL 2016
SOLICITATION NO.: W912BF-16-B-0007
CONTRACT NO.: -
FILE NAME: MIA5E-002
FILE NUMBER: AF212-220
SIZE: 34X22
PLOT SCALE: AS INDICATED
PLOT DATE: 4/22/16

FY15 P-341 CONSTRUCT ADDITION B1134
MINOT AFB, NORTH DAKOTA
PN: QJVF143101

ELECTRICAL SYMBOLS LEGEND - 2 OF 2

SHEET IDENTIFICATION NUMBER
E-002

4/25/2016 4:18:18 AM
COPYRIGHT © 2016 BURNS & McDONNELL ENGINEERING COMPANY, INC.

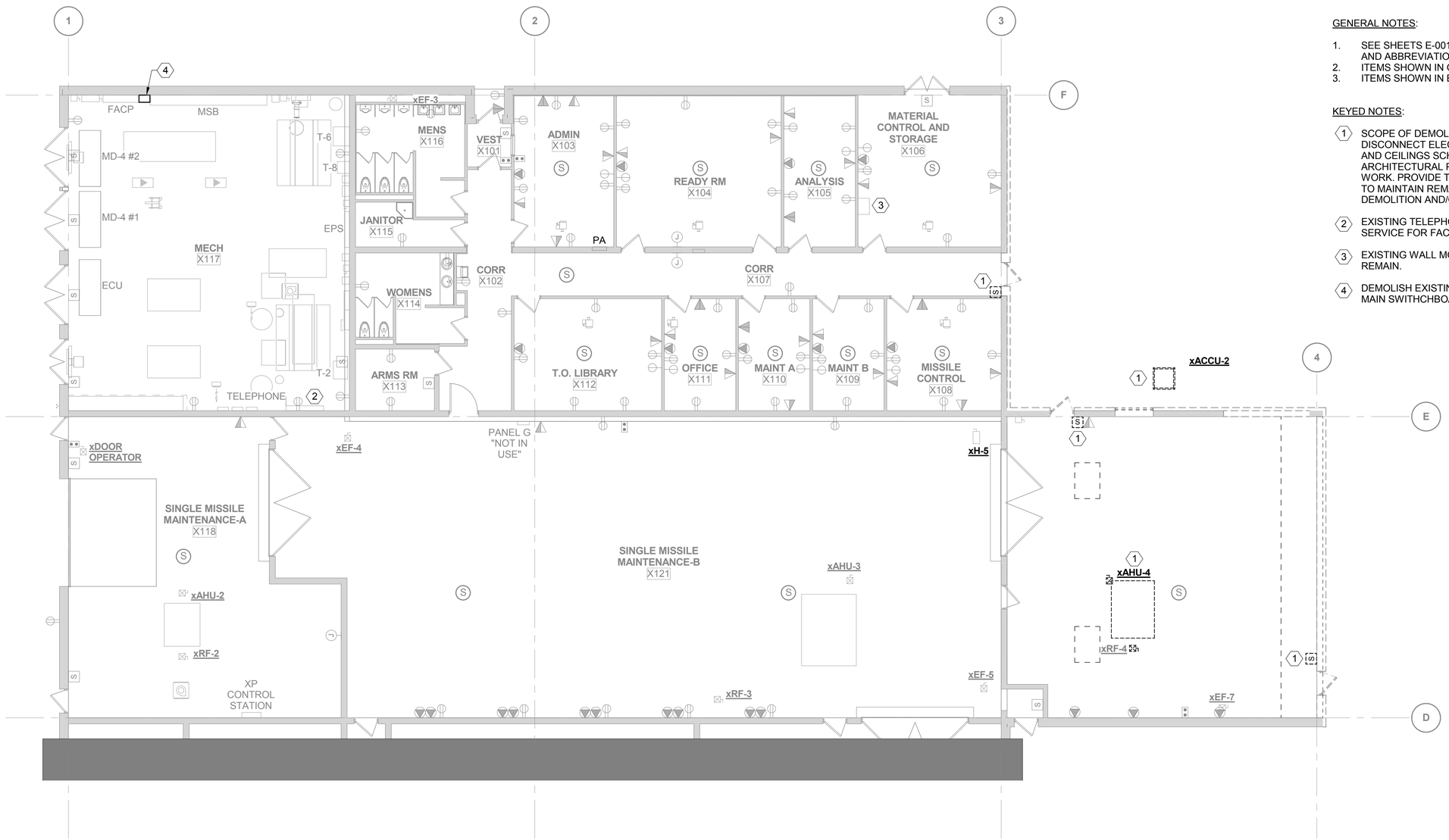

A1 DEMOLITION POWER AND COMMUNICATIONS PLAN

SCALE: 1/8" = 1'-0"

PLAN NORTH

0 4' 8' 16'

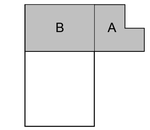

KEYPLAN

GENERAL NOTES:

1. SEE SHEETS E-001 AND E-002 FOR GENERAL NOTES, LEGEND AND ABBREVIATIONS.
2. ITEMS SHOWN IN GRAYSCALE ARE EXISTING TO REMAIN.
3. ITEMS SHOWN IN BOLD AND DASHED ARE TO BE DEMOLISHED.

KEYED NOTES:

1. SCOPE OF DEMOLITION WORK: CONTRACTOR SHALL DISCONNECT ELECTRICAL SYSTEMS IN ALL WALLS, FLOORS, AND CEILINGS SCHEDULED FOR REMOVAL, REFER TO ARCHITECTURAL PLANS FOR EXTENT OF DEMOLITION WORK. PROVIDE TEMPORARY WIRING AND CONNECTIONS TO MAINTAIN REMAINING SYSTEMS IN SERVICE DURING DEMOLITION AND/OR MODIFICATION.
2. EXISTING TELEPHONE BACKBOARD, LOCATION OF FIBER SERVICE FOR FACILITY, BOTH EXISTING TO REMAIN.
3. EXISTING WALL MOUNT COMMUNICATIONS CABINET TO REMAIN.
4. DEMOLISH EXISTING SURGE PROTECTION DEVICE SERVING MAIN SWITHCHBOARD.

US ARMY CORPS OF ENGINEERS
OMAHA DISTRICT

SYM.	DATE	DESCRIPTION	APPR.	SYM.	DATE	DESCRIPTION	APPR.

DESIGNED BY: K.WATSON
DWN BY: E.KREINER
CKD BY: M. MACOUBRIE
SUBMITTED BY: -
DATE: APRIL 2016
SOLICITATION NO.: W9128F-16-B-0007
CONTRACT NO.: -
FILE NAME: MIA8ED101
FILE NUMBER: AF212-220
SIZE: 34X22
PLOT SCALE: AS INDICATED
PLOT DATE: 4/22/16

U.S. ARMY ENGINEER DISTRICT
CORPS OF ENGINEERS
OMAHA, NEBRASKA

BURNS & McDONNELL
8201 NORMAN CENTER DR. #300
BLOOMINGTON, MN 55437
952-656-6003

FY15 P-341 CONSTRUCT ADDITION B1134
MINOT AFB, NORTH DAKOTA
PN: QJVF143101

DEMOLITION POWER AND COMMUNICATIONS PLAN

SHEET IDENTIFICATION NUMBER
ED101

4/25/2016 4:18:39 AM
COPYRIGHT © 2016 BURNS & McDONNELL ENGINEERING COMPANY, INC.

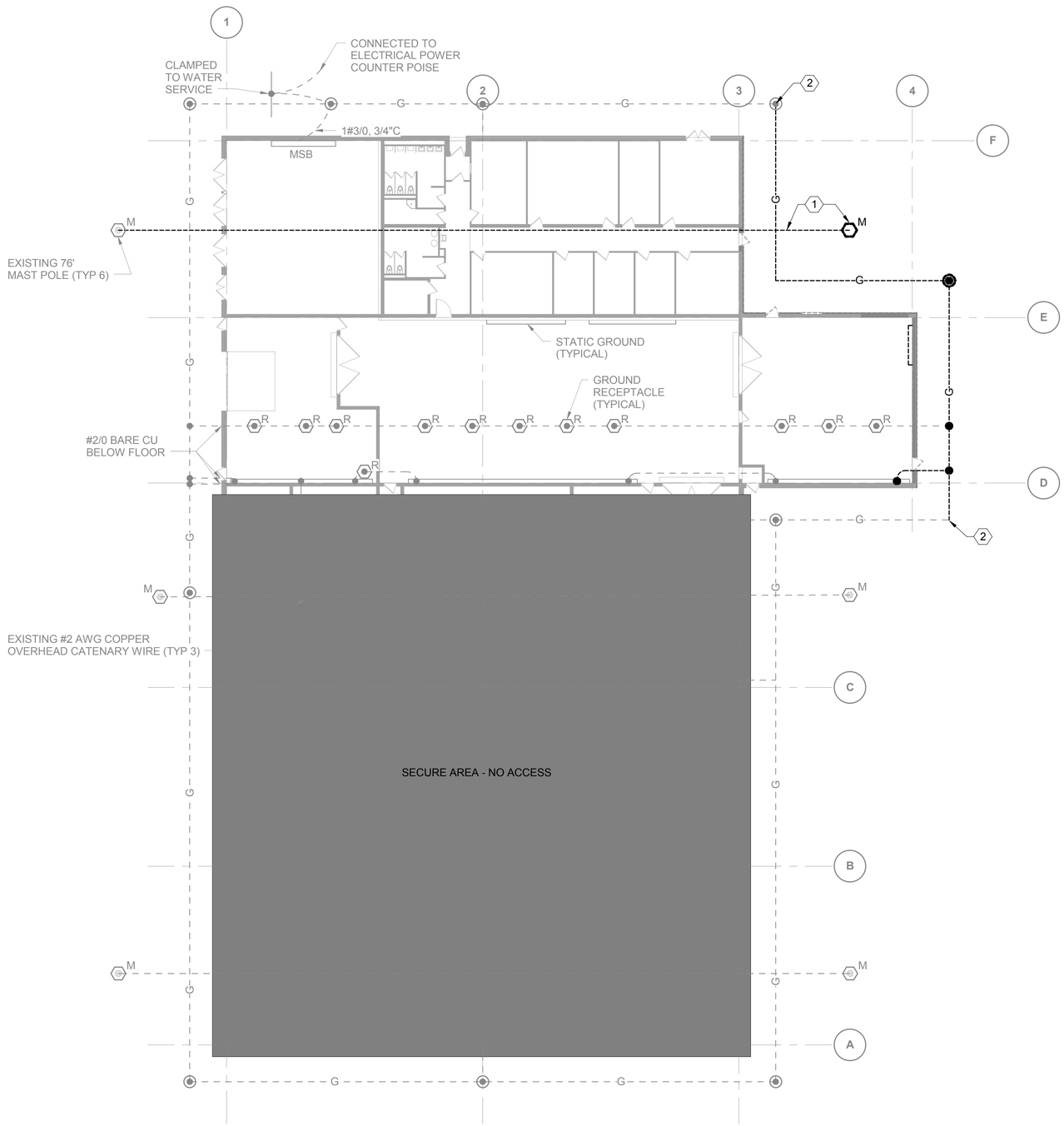

A1 DEMOLITION GROUNDING AND LIGHTNING PROTECTION PLAN

SCALE: 1/16" = 1'-0"

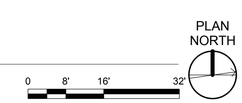

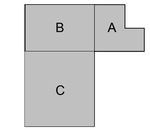

KEYPLAN

GENERAL NOTES:

1. SEE SHEETS E-001 AND E-002 FOR GENERAL NOTES, LEGEND AND ABBREVIATIONS.
2. ITEMS SHOWN IN GRAYSCALE ARE EXISTING TO REMAIN.
3. ITEMS SHOWN IN BOLD AND DASHED ARE TO BE DEMOLISHED.

KEYED NOTES:

1. DEMOLISH EXISTING 76' MAST POLE AND ASSOCIATED # AWG CATENARY WIRE AND TURN OVER TO CONTRACTING OFFICER.
2. INTERCEPT EXISTING COUNTERPOISE AND EXTEND NEW GROUNDING SYSTEM TO ACCOMMODATE NEW BUILDING FOOTPRINT, SEE E-102. PROTECT IN PLACE EXISTING COUNTERPOISE DURING CONSTRUCTION.

US ARMY CORPS OF ENGINEERS
OMAHA DISTRICT

SYM.	DATE	DESCRIPTION	APPR.	SYM.	DATE	DESCRIPTION	APPR.

DESIGNED BY: K.WATSON
DWN BY: E.KREINER
CKD BY: M. MACOUBRIE
SUBMITTED BY: -
DATE: APRIL 2016
SOLICITATION NO.: W9128F-16-B-0007
CONTRACT NO.: -
FILE NAME: MIA8ED102
FILE NUMBER: AF212-220
SIZE: 34X22
PLOT SCALE: AS INDICATED
PLOT DATE: 4/22/16

U.S. ARMY ENGINEER DISTRICT
CORPS OF ENGINEERS
OMAHA, NEBRASKA

BURNS & McDONNELL
8201 NORMAN CENTER DR. #300
BLOOMINGTON, MN 55437
952-656-6003

FY15 P-341 CONSTRUCT ADDITION B1134
MINOT AFB, NORTH DAKOTA
PN: QJVF143101

DEMOLITION GROUNDING AND LIGHTNING PROTECTION PLAN

SHEET IDENTIFICATION NUMBER
ED102

4/25/2016 4:18:40 AM
COPYRIGHT © 2016 BURNS & McDONNELL ENGINEERING COMPANY, INC.

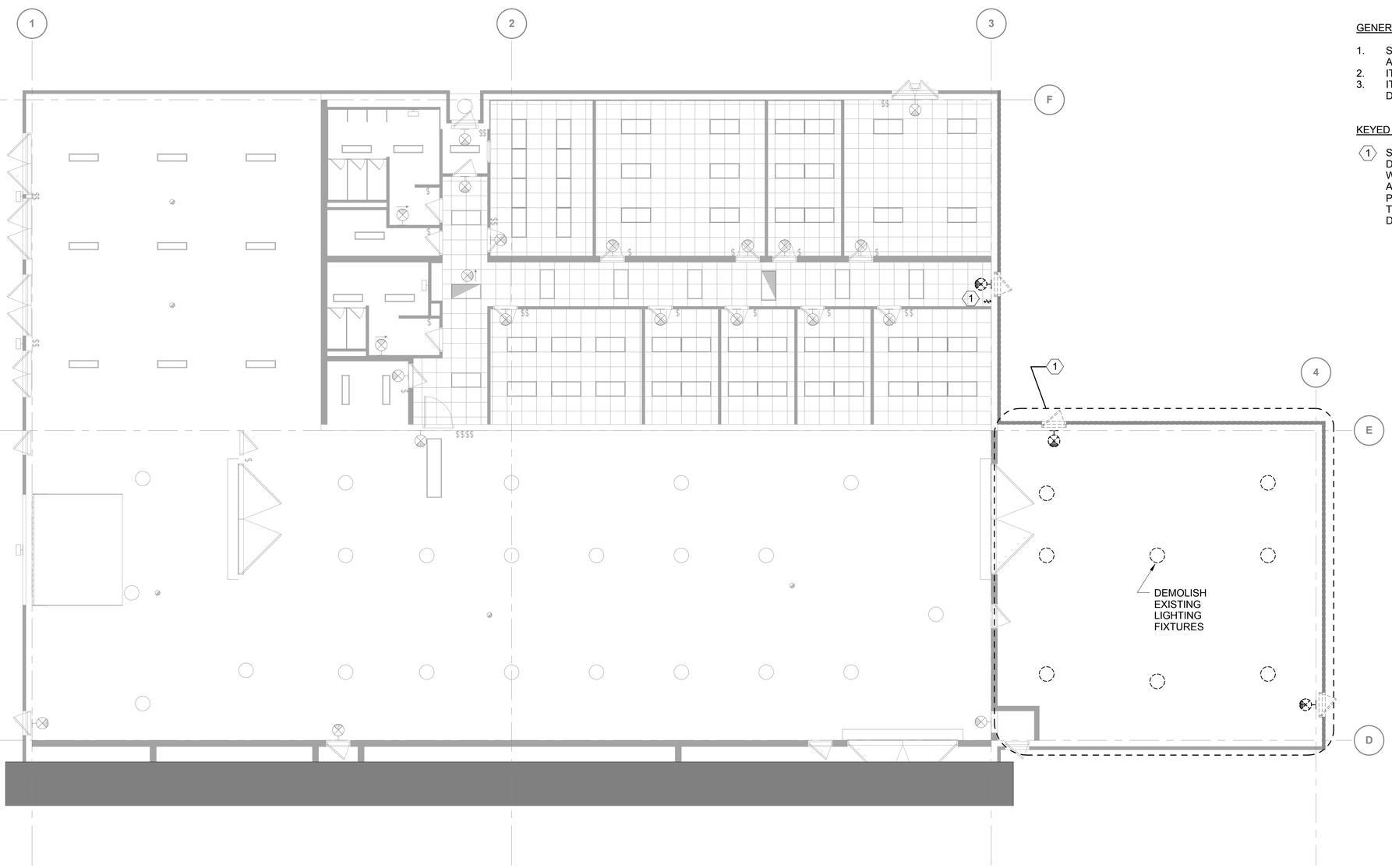

A1 DEMOLITION LIGHTING PLAN
SCALE: 1/8" = 1'-0"

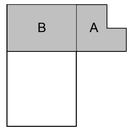

KEYPLAN

GENERAL NOTES:

1. SEE SHEETS E-001 AND E-002 FOR GENERAL NOTES, LEGEND AND ABBREVIATIONS.
2. ITEMS SHOWN IN GRAYSCALE ARE EXISTING TO REMAIN.
3. ITEMS SHOWN IN BOLD AND DASHED ARE TO BE DEMOLISHED.

KEYED NOTES:

1. SCOPE OF DEMOLITION WORK: CONTRACTOR SHALL DISCONNECT ELECTRICAL SYSTEMS IN ALL EXISTING WALLS, FLOORS, AND CEILINGS SCHEDULED FOR REMOVAL, AS SHOWN ON ARCHITECTURAL DEMOLITION PLANS. PROVIDE TEMPORARY WIRING AND CONNECTIONS TO MAINTAIN REMAINING SYSTEMS IN SERVICE DURING DEMOLITION AND/OR MODIFICATION

US ARMY CORPS OF ENGINEERS
OMAHA DISTRICT

SYM.	DATE	DESCRIPTION	APPR.	SYM.	DATE	DESCRIPTION	APPR.

DESIGNED BY: K.WATSON
DWN BY: E.KREINER
CKD BY: M. MACOUBRIE
SUBMITTED BY: -
FILE NAME: MIA8ED111
SIZE: 34X22
PLOT SCALE: AS INDICATED
DATE: APRIL 2016
SOLICITATION NO.: W9128F-16-B-0007
CONTRACT NO.: -
FILE NUMBER: AF212-220
PLOT DATE: 4/22/16

U.S. ARMY ENGINEER DISTRICT
CORPS OF ENGINEERS
OMAHA, NEBRASKA

BURNS & McDONNELL
8201 NORMAN CENTER DR. #300
BLOOMINGTON, MN 55437
952-656-6003

FY15 P-341 CONSTRUCT ADDITION B1134
MINOT AFB, NORTH DAKOTA
PN: QJVF143101

DEMOLITION LIGHTING PLAN

SHEET IDENTIFICATION NUMBER
ED111

4/25/2016 4:18:41 AM
COPYRIGHT © 2016 BURNS & McDONNELL ENGINEERING COMPANY, INC.

GENERAL NOTES:

1. SEE SHEETS E-001 AND E-002 FOR GENERAL NOTES, LEGEND AND ABBREVIATIONS.
2. SEE SHEET E-702 FOR NEW PANELBOARD SCHEDULES
3. PANELBOARDS AND CIRCUIT BREAKERS SHOWN ON SHEET ARE EXISTING TO REMAIN UNLESS NOTED WITH A KEYED NOTE

KEYED NOTES:

⟨1⟩ EXISTING BRANCH CIRCUIT EQUIPMENT TO BE DEMOLISHED. CIRCUIT BREAKER TO BE-USED. REMOVE EXISTING BRANCH CIRCUIT BACK TO SOURCE. CONTRACTOR OPTION TO RE-USE EXISTING RACEWAY.

⟨2⟩ NEW BREAKER TO BE PROVIDED IN SPACE, SEE SHEET E-702

PANELBOARD: A (EXISTING)

LOCATION: MECH X117 **VOLTAGE:** 120/208 Wye **A.I.C. RATING:** EXISTING
SUPPLY FROM: MSB **PHASE:** 3 **MAINS TYPE:** MCB
MOUNTING: SURFACE **WIRES:** 4 **MAINS RATING:** 400 A
ENCLOSURE: NEMA 1 **MCB RATING:** 400 A

NOTES:

#	BKR	P	LOAD SERVED	WIRE / GROUND / CONDUIT	A		B		C		WIRE / GROUND / CONDUIT	LOAD SERVED	P	BKR	#	
1	100	3	SPARE		0	0					--	SPACE	--	--	2	⟨2⟩
3	--	--	--	--			0	0			--	SPACE	--	--	4	⟨2⟩
5	--	--	--	--					0	0	--	SPACE	--	--	6	⟨2⟩
7	20	1	LTS & EF (VALVE PIT)	--	0	0					--	SPARE	1	20	8	
9	20	1	RECEPTACLE	--			0	0			--	FUEL TANK MONITORING SYSTEM 600	1	20	10	
11	20	1	FUEL OIL DAY TANK PUMP	--					0	0	--	FUEL RM - SPECIAL OUTLET	1	20	12	
13	20	1	UH-1 & UH-8	--	0	0					--	EF-3	1	20	14	
15	20	1	HONEYWELL EMS	--			0	0			--	SPARE	1	20	16	
17	20	1	SPARE	--					0	0	--	RECEPTACLE	1	20	18	
19	20	1	CONTROL AIR DRYER	--	0	0					--	SPARE	1	20	20	
21	20	3	FUEL PUMP RM (FUEL/REFUEL	--			0	0			--	PUMP 1 LIFT STATION	3	20	22	
23	--	--	--	--					0	0	--	--	--	--	24	
25	--	--	--	--	0	0					--	--	--	--	26	
27	20	3	AFF CONT. AIR COMP	--			0	0			--	UNKNOWN	3	20	28	
29	--	--	--	--					0	0	--	--	--	--	30	
31	--	--	--	--	0	0					--	--	--	--	32	
33	20	3	FLAMMABLE LIQUID STORAGE	--			0	0			--	ENGINE BLOCK HRTS REPT.	3	20	34	
35	--	--	--	--					0	0	--	--	--	--	36	
37	--	--	--	--	0	0					--	--	--	--	38	
39	20	3	PUMP-2 LIFT STATION	--			0	0			--	EXHAUST FAN OVERHEAD (MECH RM)	3	20	40	
41	--	--	--	--					0	0	--	--	--	--	42	
43	--	--	--	--	0	0					--	--	--	--	44	
45	20	3	PANEL E	--			0	0			--	MAIN	3	20	46	
47	--	--	--	--					0	0	--	--	--	--	48	
49	--	--	--	--	0	0					--	--	--	--	50	
				TOTAL LOAD:	----------------		----------------		----------------							
				TOTAL AMPS:	----------------		----------------		----------------							

PANEL TOTALS	
TOTAL CONNECTED LOAD:	----------------
TOTAL ESTIMATED DEMAND LOAD:	----------------
TOTAL CONNECTED CURRENT:	----------------
TOTAL ESTIMATED DEMAND...	----------------
DEMAND WITH EXPANSION:	----------------

PANELBOARD: PANEL B (EXISTING)

LOCATION: CORR X107 **VOLTAGE:** 120/208 Wye **A.I.C. RATING:** EXISTING
SUPPLY FROM: MSB **PHASE:** 3 **MAINS TYPE:** MCB
MOUNTING: SURFACE **WIRES:** 4 **MAINS RATING:** 100 A
ENCLOSURE: NEMA 1 **MCB RATING:** 400 A

NOTES:

#	BKR	P	LOAD SERVED	WIRE / GROUND / CONDUIT	A		B		C		WIRE / GROUND / CONDUIT	LOAD SERVED	P	BKR	#
1	20	1	LIGHTING ENTRANCE DOOR-FANS RM...	--	0	0					--	RECEPTACLE RM 105, 106	1	20	2
3	20	1	RECEPTACLE RM 103	--			0	0			--	RECEPTACLE 104-106	1	20	4
5	20	1	RECEPTACLE RM 103	--					0	0	--	RECEPTACLE, CLOSET, MEN & RM 117	1	20	6
7	20	1	RECEPTACLE RM 104, MICROWAVE	--	0	0					--	RECEPTACLE 112	1	20	8
9	20	1	RECEPTACLE RM 112	--			0	0			--	RECEPTACLE RM 111-112	1	20	10
11	20	1	RECEPTACLE RM 100-108	--					0	0	--	RECEPT RM 110-111, SUMP PUMP RM...	1	20	12
13	20	1	RECEPTACLE RM 108	--	0	0					--	RECEPT, WOMENS, ARMS RM & RM 117	1	20	14
15	20	1	RECEPT, COMPUTER RM & RM 106	--			0	0			--	RECEPTACLE RM 106 NORTH SIDE	1	20	16
17	20	1	RECEPT COMPUTER RM	--					0	0	--	RECEPTACLE RM 106 SOUTH SIDE	1	20	18
19	20	1	EWC VACE	--	0	0					--	BREAK ROOM EAST WALL	1	20	20
21	20	1	AN/GSS-39 (V) ACP (RM 110)	--			0	0			--	CEILING HEAT OFFICES	1	20	22
23	20	1	CEILING HEAT OFFICES	--					0	0	--	CEILING HEAT OFFICES	1	20	24
25	20	3	BREAK ROOM OUTLETS	--	0	0					--	UNKNOWN	3	80	26
27	--	--	--	--			0	0			--	--	--	--	28
--	--	--	--	--					0	0	--	--	--	--	30
				TOTAL LOAD:	------------		------------		------------						
				TOTAL AMPS:	------------		------------		------------						

PANEL TOTALS	
TOTAL CONNECTED LOAD:	------------
TOTAL ESTIMATED DEMAND LOAD:	------------
TOTAL CONNECTED CURRENT:	------------
TOTAL ESTIMATED DEMAND...	------------

DEMAND WITH EXPANSION:	------------

PANELBOARD: D1 (EXISTING)

LOCATION: MECH X117 **VOLTAGE:** 480/277 Wye **A.I.C. RATING:** EXISTING
SUPPLY FROM: MSB **PHASE:** 3 **MAINS TYPE:** MLO
MOUNTING: SURFACE **WIRES:** 4 **MAINS RATING:** 400 A
ENCLOSURE: NEMA 1 **MCB RATING:** 400 A

NOTES:

	#	BKR	P	LOAD SERVED	WIRE / GROUND / CONDUIT	A		B		C		WIRE / GROUND / CONDUIT	LOAD SERVED	P	BKR	#	
	1	20	1	LIGHTING OFFICE RM 103-106	--	0	0					--	LIGHTING MECH. RM 117	1	20	2	
	3	20	1	LIGHTING OFFICE 108-112	--			0	0			--	LIGHTING RM 121	1	20	4	
	5	20	1	LIGHTING OFFICE, MEN, WOMEN	--					0	0	--	LIGHTING RM 121	1	20	6	
	7	20	1	LIGHTING RM 122	--	0	0					--	LIGHTING RM 121	1	20	8	
	9	20	1	LIGHTING 118	--			0	0			--	SPACE	--	--	---	
	11	20	1	LIGHTING 118	--					0	0	--	LIGHTING PAINT ROOM	1	20	12	⟨1⟩
	13	20	1	EMERGENCY POWER SYSTEM	--	0	0					--	LIGHITNG PAINT ROOM	1	20	14	⟨1⟩
	15	25	3	HWP-1	--			0	0			--	CWP-1	3	20	16	
	---	--	--	--	--					0	0	--	--	--	--	---	
	---	--	--	--	--	0	0					--	--	--	--	---	
	17	15	3	RF-1	--			0	0			--	SPARE	3	15	18	
	---	--	--	--	--					0	0	--	--	--	--	---	
	---	--	--	--	--	0	0					--	--	--	--	---	
⟨1⟩	19	20	3	AHU-4	--			0	0			--	DRYER #1	3	20	20	
	---	--	--	--	--					0	0	--	--	--	--	---	
	---	--	--	--	--	0	0					--	--	--	--	---	
	21	15	3	DRYER #2	--			0	0			--	RF-4	3	20	22	⟨1⟩
	---	--	--	--	--					0	0	--	--	--	--	---	
	---	--	--	--	--	0	0					--	--	--	--	---	
	23	15	3	AHU-2/RF-2 FUEL RM	--			0	0			--	SPARE	3	15	24	
	---	--	--	--	--					0	0	--	--	--	--	---	
	---	--	--	--	--	0	0					--	--	--	--	---	
					TOTAL LOAD:	----------------		----------------		----------------							
					TOTAL AMPS:	----------------		----------------		----------------							

PANEL TOTALS	
TOTAL CONNECTED LOAD:	----------------
TOTAL ESTIMATED DEMAND LOAD:	----------------
TOTAL CONNECTED CURRENT:	----------------
TOTAL ESTIMATED DEMAND...	----------------
DEMAND WITH EXPANSION:	----------------

PANELBOARD: D2 (EXISTING)

LOCATION: MECH X117 **VOLTAGE:** 480/277 Wye **A.I.C. RATING:** EXISTING
SUPPLY FROM: MSB **PHASE:** 3 **MAINS TYPE:** MCB
MOUNTING: SURFACE **WIRES:** 4 **MAINS RATING:** 400 A
ENCLOSURE: NEMA 1

NOTES:

#	BKR	P	LOAD SERVED	WIRE / GROUND / CONDUIT	A		B		C		WIRE / GROUND / CONDUIT	LOAD SERVED	P	BKR	#	
25	40	3	JP FUEL PUMP NO. 3 JP-10	--	0	0					--	AHU-1	3	15	26	
---	--	--	--	--			0	0			--	--	--	--	---	
---	--	--	--	--					0	0	--	--	--	--	---	
27	15	3	ACCU-1	--	0	0					--	JP FUEL PUMP NO. 4 JP-10	3	40	28	
---	--	--	--	--			0	0			--	--	--	--	---	
---	--	--	--	--					0	0	--	--	--	--	---	
29	20	3	SPARE	--	0	0					--	SPARE	3	20	30	
---	--	--	--	--			0	0			--	--	--	--	---	
---	--	--	--	--					0	0	--	--	--	--	---	
31	15	3	EF-4	--	0	0					--	CONTROL AIR COMP.	3	20	32	
---	--	--	--	--			0	0			--	--	--	--	---	
---	--	--	--	--					0	0	--	--	--	--	---	
33	25	3	REMOTE DRY COOLER	--	0	0					--	SPARE	3	20	34	
---	--	--	--	--			0	0			--	--	--	--	---	
---	--	--	--	--					0	0	--	--	--	--	---	
35	15	3	SF-1	--	0	0					--	SF-2	3	15	36	
---	--	--	--	--			0	0			--	--	--	--	---	
---	--	--	--	--					0	0	--	--	--	--	---	
37	15	3	BOILER	--	0	0		0			--	AHU-4 CONDENSING COIL	3	30	38	⟨1⟩
---	--	--	--	--			0	0			--	--	--	--	---	
---	--	--	--	--					0	0	--	--	--	--	---	
				TOTAL LOAD:	--------------		--------------		--------------							
				TOTAL AMPS:	--------------		--------------		--------------							

PANEL TOTALS	
TOTAL CONNECTED LOAD:	----------------
TOTAL ESTIMATED DEMAND LOAD:	----------------
TOTAL CONNECTED CURRENT:	------------
TOTAL ESTIMATED DEMAND...	------------

DEMAND WITH EXPANSION:	------------

US ARMY CORPS OF ENGINEERS
OMAHA DISTRICT

SYM.	DATE	DESCRIPTION	APPR.	SYM.	DATE	DESCRIPTION	APPR.

DESIGNED BY: K.WATSON	DATE: APRIL 2016
DWN BY: E.KREINER / CKD BY: M. MACOUBRIE	SOLICITATION NO.: W9128F-16-B-0007
SUBMITTED BY: -	CONTRACT NO.: -
FILE NAME: MIA8ED701	FILE NUMBER: AF212-220
SIZE: 34X22 / PLOT SCALE: AS INDICATED	PLOT DATE: 4/22/16

U.S. ARMY ENGINEER DISTRICT
CORPS OF ENGINEERS
OMAHA, NEBRASKA

BURNS & McDONNELL
8201 NORMAN CENTER DR. #300
BLOOMINGTON, MN 55437
952-656-6003

FY15 P-341 CONSTRUCT ADDITION B1134
MINOT AFB, NORTH DAKOTA
PN: QJVF143101

DEMOLITION PANELBOARD SCHEDULE

SHEET IDENTIFICATION NUMBER
ED701

4/25/2016 4:18:43 AM
COPYRIGHT © 2016 BURNS & McDONNELL ENGINEERING COMPANY, INC.

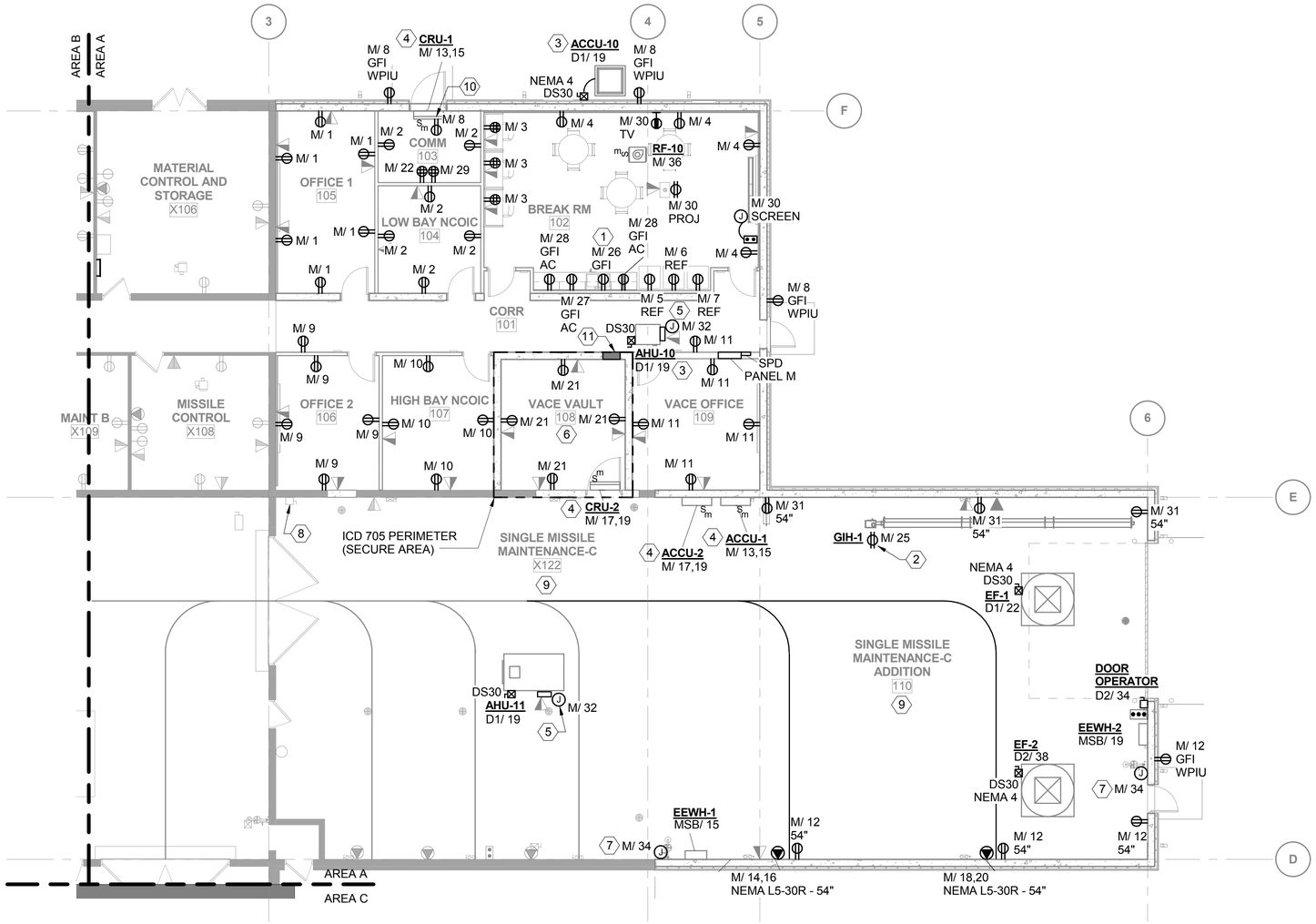

A1 POWER PLAN - AREA A

SCALE: 1/8" = 1'-0"

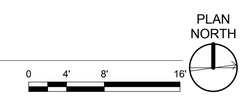

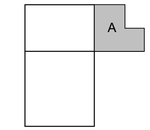

KEYPLAN

CGENERAL NOTES:

1. SEE SHEETS E-001 AND E-002 FOR GENERAL NOTES, LEGEND AND ABBREVIATIONS.
2. ITEMS SHOWN IN GRAYSCALE ARE EXISTING TO REMAIN.
3. ITEMS SHOWN IN BOLD ARE NEW UNDER THIS CONTRACT.
4. SEE SHEET E-504 FOR HAZARDOUS CLASSIFICATION DETAILS.
5. SECURED AREA SPACE SHALL MEET REQUIRMENTS OF ICD 705-1 AND ICD 705-2.

KEYED NOTES:

1. PROVIDE RECEPTACLE MOUNTED IN SINK BASIN FOR EWH-1. COORDINATE EXACT LOCATION PRIOR TO WORK.
2. PROVIDE RECEPTACLE FOR GIH-1 CORD AND PLUG. COORDINATE EXACT LOCATION AND MOUNTING PRIOR TO WORK.
3. PROVIDE 3/4" EMPTY CONDUIT BETWEEN ACCU-10 AND AHU-10 FOR DIVISION 23 CONTROL WIRING.
4. PROVIDE 3/4" EMPTY CONDUIT BETWEEN ACCU AND CRU FOR DIVISION 23 CONTROL WIRING.
5. PROVIDE 120V POWER AT AHU CONTROL PANEL.
6. THIS ROOM IS CLASS I, DIV 2 UP TO 18" AFF. PROVIDE ALL POWER RECEPTACLES AT 24" AFF.
7. PROVIDE POWER FOR DRENCH SHOWER ALARM.
8. 60A HOIST DISCONNECT SWITCH EXISTING TO REMAIN.
9. THIS ROOM IS CLASS I, DIVISION 1 UP TO 48" AFF. ALL WALL MOUNTED DEVICES IN THIS ROOM SHALL BE MOUNTED ABOVE 54" AFF.
10. PROVIDE RECEPTACLE FOR CONDENSATE PUMP CRU-1. CONFIRM EXACT LOCATION PRIOR TO WORK.
11. PROPOSED LOCATION OF CONDUIT PENETRATIONS INTO SECURED AREA. SEE DETAIL B4 ON SHEET E-503.

US ARMY CORPS OF ENGINEERS
OMAHA DISTRICT

SYM.	DATE	DESCRIPTION	APPR.	SYM.	DATE	DESCRIPTION	APPR.

DESIGNED BY: K.WATSON
DWN BY: E.KREINER
CKD BY: M. MACOUBRIE
SUBMITTED BY: -
DATE: APRIL 2016
SOLICITATION NO.: W9128F-16-B-0007
CONTRACT NO.: -
FILE NAME: MIA8E-101
FILE NUMBER: AF212-220
SIZE: 34X22
PLOT SCALE: AS INDICATED
PLOT DATE: 4/22/16

U.S. ARMY ENGINEER DISTRICT
CORPS OF ENGINEERS
OMAHA, NEBRASKA

BURNS & McDONNELL
8201 NORMAN CENTER DR. #300
BLOOMINGTON, MN 55437
952-656-6003

FY15 P-341 CONSTRUCT ADDITION B1134
MINOT AFB, NORTH DAKOTA
PN: QJVF143101

POWER PLAN - AREA A

SHEET IDENTIFICATION NUMBER
E-101

4/25/2016 4:18:23 AM

COPYRIGHT © 2016 BURNS & McDONNELL ENGINEERING COMPANY, INC.

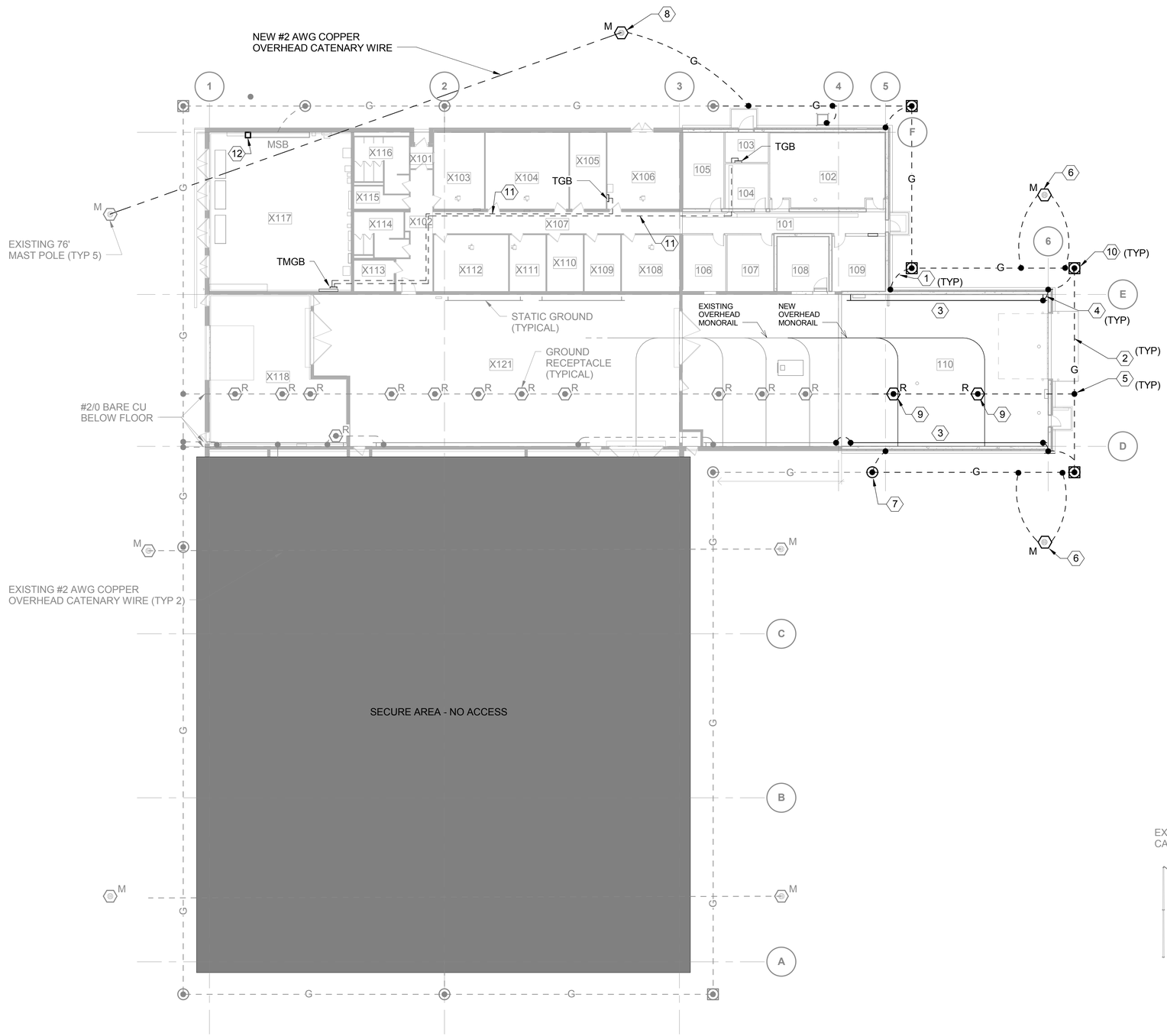

A1 GROUNDING AND LIGHTNING PROTECTION PLAN

SCALE: 1/16" = 1'-0"

PLAN NORTH

0 8' 16' 32'

GENERAL NOTES:

1. SEE SHEETS E-001 AND E-002 FOR GENERAL NOTES, LEGEND AND ABBREVIATIONS.
2. ITEMS SHOWN IN GRAYSCALE ARE EXISTING TO REMAIN.
3. ITEMS SHOWN IN BOLD ARE NEW UNDER THIS CONTRACT.
4. LIGHTNING PROTECTION SHALL CONFORM TO THE LATEST EDITION OF NFPA 70, NFPA 780, UL 90 AND UL 96. THE FOLLOWING NOTES AND APPLICABLE DESIGN HEREIN ARE PROVIDED AS STANDARD GUIDANCE FOR LIGHTNING PROTECTION DESIGN OF STUCTURES HOUSING EXPLOSIVE MATERIALS. THE DRAWINGS, DETAILS AND NOTES ARE NOT INTENDED TO CONSTITUTE A COMPLETE LIGHTNING PROTECTION SYSTEM DESIGN. DESIGNER SHALL CONSULT LISTED CRITERIA IN DRAWINGS AND SPECIFICATIONS TO ENSURE A COMPLETE AND FUNCTIONAL DESIGN IS PROVIDED. THE COMPLETE INSTALLATION SHALL RECEIVE A UL MASTER LABEL CERTIFICATE.
5. ALL MATERIALS SHALL BE CLASS I.
6. INSTALLATION AND TESTING SHALL CONFORM WITH AFI 32-1065. THE LP SYSTEM SHALL BE INSPECTED BY A THIRD PARTY INSPECTOR WHOSE SOLE WORK IS LIGHTNING PROTECTION AND SHALL BE CERTIFIED BY THIS THIRD PARTY INSPECTOR AS COMPLIANT WITH AFI 32-1065 AND NFPA 780.
7. ALL UNDERGROUND CONDUIT SHALL BE MINIMUM 1" PVC SCHEDULE 40, UON.
8. ALL UNDERGROUND CONDUIT IN PAVED AREAS SHALL BE CONCRETE ENCASED, UON.
9. PROTECTION OF THE FACILITY VIA THE LIGHTNING PROTECTION AND GROUNDING SYSTEM SHALL BE PROVIDED THROUGHOUT THE DURATION OF CONSTRUCTION. A 3-4 DAY DOWNTIME HAS BEEN GRANTED BY MINOT AFB 5TH CES TO INSTALL THE NEW LIGHTNING PROTECTION AND GROUNDING SYSTEM. CONTRACTOR SHALL NOTIFY CONTRACTING OFFICER (30) DAYS PRIOR TO WORK.
10. CONTRACTOR TO CONFIRM ALL EXISTING TELECOMMUNICATION GROUNDING PRIOR TO WORK. COORDINATE WITH CONTRACTING OFFICER.

KEYED NOTES:

1. PROVIDE #2 AWG GROUND TO BUILDING REINFORCING STEEL. EXOTHERMICALLY WELD AT EACH END. CABLE IN PLASTIC CONDUIT WHERE IT PASSES THROUGH CONCRETE. SEE DETAIL B4 ON SHEET E-501 FOR ADDITIONAL INFORMATION.
2. PROVIDE #4/0 BARE STRANDED COPPER FOR COUNTERPOISE GROUND LOOP AT 30" BELOW GRADE UNO.
3. PROVIDE 2" X 1/4" STATIC GROUND BUS MOUNTED AT 5'-6" AFF AND BOND TO EXISTING WALL MOUNTED STATIC GROUND BUS SO AS TO BE CONTINUOUS. STATIC GROUND BUS TO TERMINATE 3'-0" FROM END OF WALL. SEE DETAIL A1 ON SHEET E-502 FOR ADDITIONAL DETAILS.
4. PROVIDE #2/0 BARE AWG GROUND TO STATIC GROUND BUS.
5. SEE DETAIL A3 ON SHEET E-501 FOR EXOTHERMIC WELD REQUIREMENTS.
6. PROVIDE MAST FOR LIGHTNING PROTECTION MOUNTED ON POLE BASE. SEE DETAIL A1 ON SHEET E-502 FOR ADDITIONAL INFORMATION.
7. SEE DETAIL A4 ON E-501 FOR GROUND ROD REQUIREMENTS. LOCATE 3'-0" OUTSIDE OF STRUCTURE, 2'-0" OUTSIDE OF DRIPLINE.
8. PROVIDE NEW 76' MAST WITH NEW #2 AWG CATENARY WIRE, SEE DETAIL A4 ON SHEET E-502.
9. PROVIDE GROUNDING RECEPTACLE, SEE DETAIL A1 ON SHEET E-501.
10. SEE DETAIL C4 ON SHEET E-501 FOR GROUNDING TEST WELL REQUIREMENTS.
11. PROVIDE #2/0 AWG TELECOMMUNICATION BONDING BACKBONE BETWEEN TMGB AND TGB.
12. PROVIDE NEW SURGE PROTECTION DEVICE FOR MAIN SWITCHBOARD.

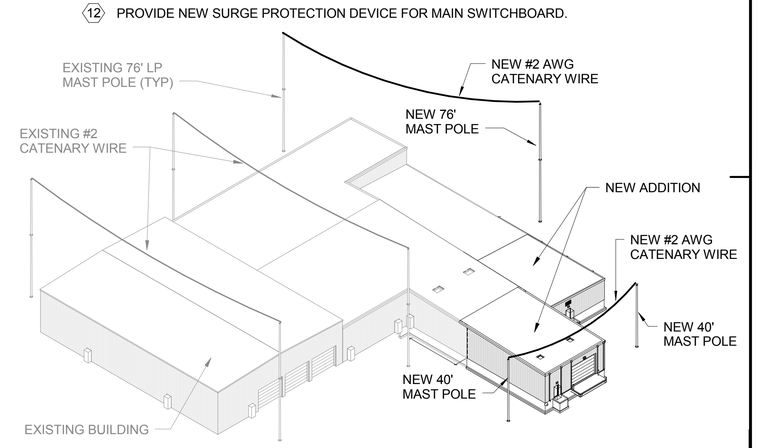

A4 LIGHTNING PROTECTION - ISOMETRIC

SCALE: NTS

KEYPLAN

B A

US ARMY CORPS OF ENGINEERS
OMAHA DISTRICT

SYM.	DATE	DESCRIPTION	SYM.	DATE	DESCRIPTION	APPR.

DESIGNED BY: K KAWSON
DWN BY: E KREINER
CKD BY: M MCDUBBE
SUBMITTED BY: -
DATE: APRIL 2016
SOLICITATION NO.: W912BF-16-B-0007
CONTRACT NO.: -
FILE NAME: MIA8E-102
FILE NUMBER: AF212-220
SIZE: 34X22
PLOT SCALE: AS INDICATED
PLOT DATE: 4/22/16

U.S. ARMY ENGINEER DISTRICT
CORPS OF ENGINEERS
OMAHA, NEBRASKA

BURNS & McDONNELL
8201 NORMAN CENTER DR. #300
BLOOMINGTON, MN 55437
952-656-6003

FY15 P-341 CONSTRUCT ADDITION B1134
MINOT AFB, NORTH DAKOTA
PN: QJVF143101

GROUNDING AND LIGHTNING PROTECTION PLAN

SHEET IDENTIFICATION NUMBER
E-102

4/25/2016 4:18:24 AM

COPYRIGHT © 2016 BURNS & McDONNELL ENGINEERING COMPANY, INC.

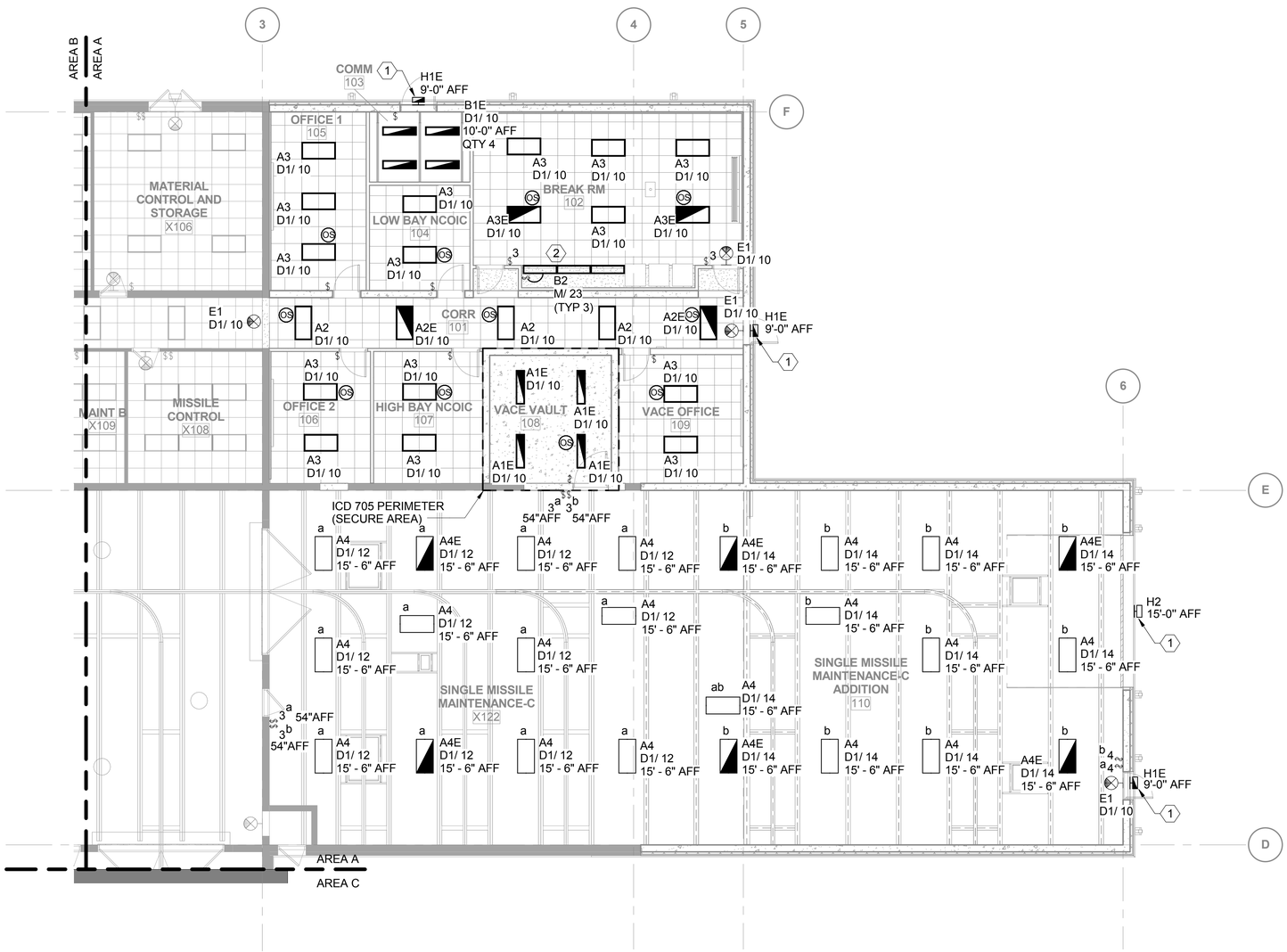

A1 LIGHTING PLAN - AREA A

SCALE: 1/8" = 1'-0"

PLAN NORTH

0 4' 8' 16'

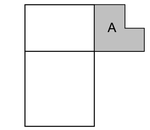

KEYPLAN

GENERAL NOTES:

1. SEE SHEETS E-001 AND E-002 FOR GENERAL NOTES, LEGEND AND ABBREVIATIONS.
2. ITEMS SHOWN IN GRAYSCALE ARE EXISTING TO REMAIN.
3. ITEMS SHOWN IN BOLD ARE NEW UNDER THIS CONTRACT.
4. SEE SHEET E-504 FOR HAZARDOUS LOCATION PLAN.

KEYED NOTES:

1. PROVIDE NEW EXTERIOR WALL MOUNT LIGHTING FIXTURE WITH INTEGRAL PHOTOCELL.
2. PROVIDE TASK LIGHTING BELOW CABINET WITH ROCKER SWITCH CONTROL.

US ARMY CORPS OF ENGINEERS
OMAHA DISTRICT

SYM.	DATE	DESCRIPTION	APPR.	SYM.	DATE	DESCRIPTION	APPR.

U.S. ARMY ENGINEER DISTRICT
CORPS OF ENGINEERS
OMAHA, NEBRASKA

BURNS & McDONNELL
8201 NORMAN CENTER DR. #300
BLOOMINGTON, MN 55437
952-656-6003

DESIGNED BY: K. WATSON
DWN BY: E. KREINER
CKD BY: M. MACOUBRIE
SUBMITTED BY: -
DATE: APRIL 2016
SOLICITATION NO.: W9128F-16-B-0007
CONTRACT NO.: -
FILE NAME: MIA8E-111
FILE NUMBER: AF212-220
SIZE: 34X22
PLOT SCALE: AS INDICATED
PLOT DATE: 4/22/16

FY15 P-341 CONSTRUCT ADDITION B1134
MINOT AFB, NORTH DAKOTA
PN: QJVF143101

LIGHTING PLAN - AREA A

SHEET IDENTIFICATION NUMBER
E-111

4/25/2016 4:18:26 AM
COPYRIGHT © 2016 BURNS & McDONNELL ENGINEERING COMPANY, INC.

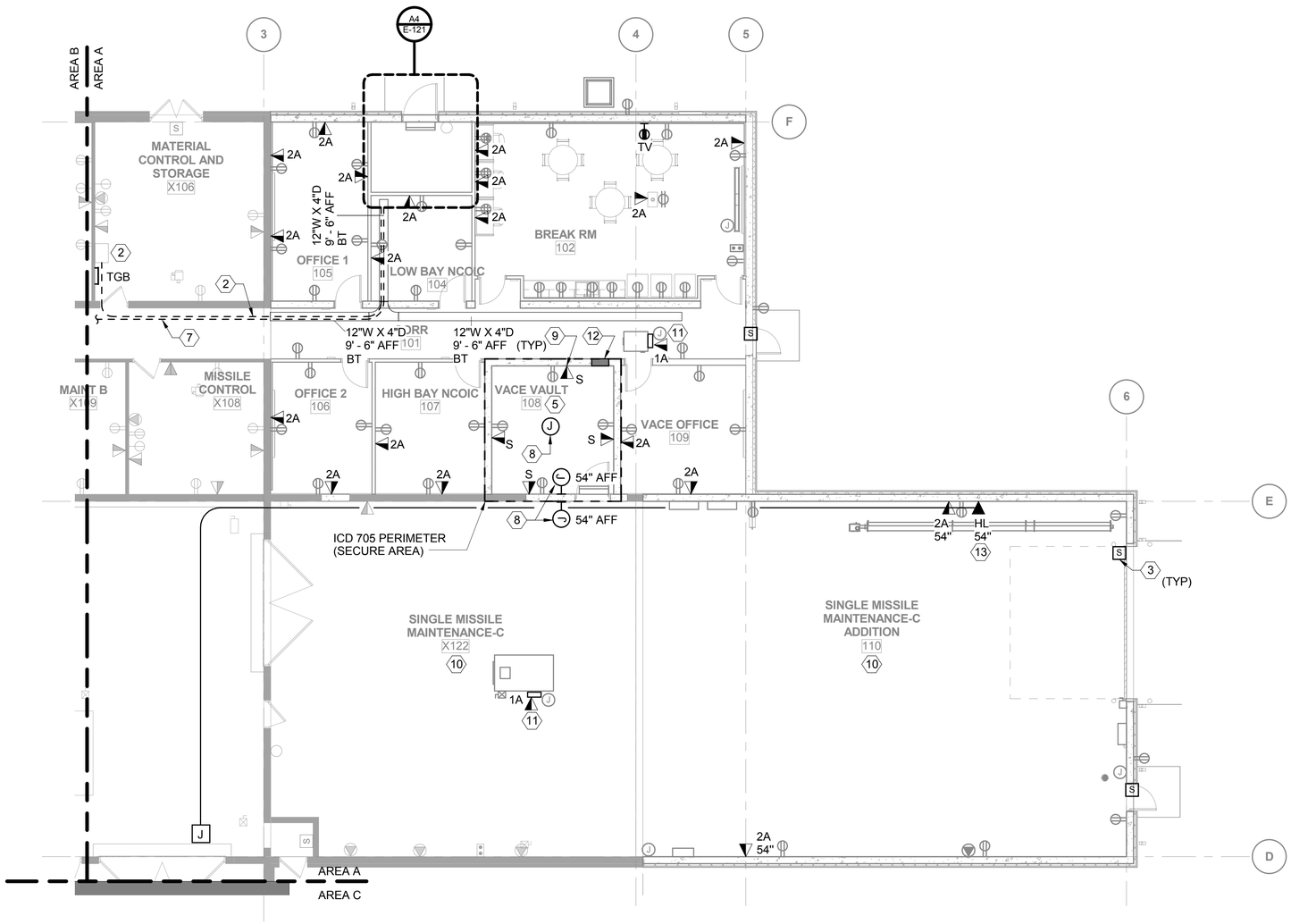

A1 COMMUNICATIONS PLAN - AREA A
SCALE: 1/8" = 1'-0"

PLAN NORTH

0 4' 8' 16'

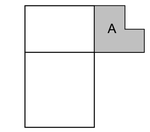

KEYPLAN

GENERAL NOTES:

1. SEE SHEETS E-001 AND E-002 FOR GENERAL NOTES, LEGEND AND ABBREVIATIONS.
2. ITEMS SHOWN IN GRAYSCALE ARE EXISTING TO REMAIN.
3. ITEMS SHOWN IN BOLD ARE NEW UNDER THIS CONTRACT.
4. ROUTE ALL COMMUNICATION CABLING IN 1" CONDUIT UON FROM DEVICE BOX TO WITHIN 1' OF NEAREST CABLE TRAY.
5. REFER TO COMMUNICATION DETAILS ON SHEET E-503.
6. ALL SENTROL DOOR CONTACTS SHOWN: CONTRACTOR SHALL PROVIDE JUNCTION BOX AT DOOR AND PROVIDE 1" CONDUIT TO WITHIN 1' OF NEAREST CABLE TRAY.
7. TV' DROPS SHALL BE A/V ROUGH-IN ONLY, CATV CABLING GFGI.
8 SEE GROUNDING PLAN E-102 FOR TELECOMMUNICATIONS BONDING BACKBONE ROUTING.
9. SECURED AREA SPACE SHALL MEET REQUIREMENTS OF ICD 705-1 AND ICD 705-2.
10. SEE SHEET E-504 FOR HAZARDOUS LOCATION PLAN.
11. SEE SHEET E-602 FOR COMMUNICATION RISER DIAGRAM.

KEYED NOTES:

1. PROVIDE 3/4" THICK FIRE RETARDANT PLYWOOD BACKBOARD, TYPICAL (3) WALLS.
2. PROVIDE COPPER BACKBONE CABLING TO EXISTING WALL MOUNT CABINET. COPPER SWITCH IN EXISTING WALL MOUNT CABINET, GFGI.
3. PROVIDE SENTROL OH DOOR TYPE CONTACT.
4. SEE DETAIL A4 ON SHEET E-503 FOR TYPICAL CONDUIT TO CABLE TRAY TRANSITION.
5. THIS ROOM IS CLASS I, DIV 2 UP TO 18" AFF. PROVIDE ALL DATA RECEPTACLES AT 24" AFF UON.
6. PROVIDE #2/0 AWG INSULATED COPPER FROM NEW TGB TO EXISTING TMGB IN ROOM X117. SEE SHEET E-102 FOR ADDITIONAL INFORMATION.
7. PROVIDE 12-STRAND SINGLE MODE (SM) FIBER FROM TELECOM FIBER DEMARC ON EXISTING TELEPHONE BACKBOARD IN MECHANICAL ROOM X117. ROUTE ABOVE THE CEILING WHERE POSSIBLE AND UTILIZE EXISTING RACEWAY WHERE POSSIBLE. FIBER SWITCH IN NEW COMM ROOM 103 IS GFGI.
8. PROVIDE ROUGH-INS FOR GFGI SECURITY PANEL,PASSIVE INFRARED CEILING MOUNT SENSOR, AND SECURE AREA ACCESS CONTROL EQUIPMENT. CONFIRM EXACT LOCATION AND QUANTITIES PRIOR TO WORK WITH CONTRACTING OFFICER.
9. SECURE AREA DATA DROPS AND ENCRYPTION/TACLANES ARE GFGI, CONTRACTOR TO PROVIDE ROUGH-INS AND SURFACE MOUNT CONDUIT. CONFIRM EXACT LOCATIONS OF DEVICES PRIOR TO WORK.
10. THIS ROOM IS CLASS I, DIV 1 UP TO 48" AFF. PROVIDE ALL NEW DATA RECEPTACLES AT 54" AFF UON.
11. PROVIDE DATA CONNECTION AT AHU CONTROL PANEL.
12. PROPOSED LOCATION OF CONDUIT PENETRATIONS INTO SECURED AREA. SEE DETAIL B4 ON SHEET E-503.
13. PROVIDE ROUGH-IN AND RACEWAY FOR NEW HOT LINE PHONE DROP. PROVIDE CONDUIT TO PROJECT BOUNDARY AND TERMINATE AT JUNCTION BOX. CABLING AND FINAL TERMINATIONS AT IDS PANEL IN HIGH BAY GFGI.

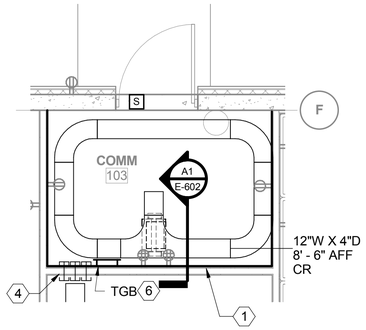

A4 ENLARGED COMMUNICATIONS PLAN - COMM ROOM 109
SCALE: 1/4" = 1'-0"

PLAN NORTH

0 2' 4' 8'

US ARMY CORPS OF ENGINEERS
OMAHA DISTRICT

SYM.	DATE	DESCRIPTION	APPR.

SYM.	DATE	DESCRIPTION	APPR.

DESIGNED BY: K WATSON
DWN BY: E KREINER
CKD BY: M CABRIE
SUBMITTED BY: -
DATE: APRIL 2016
SOLICITATION NO.: W912BF-16-B-0007
CONTRACT NO.: -
FILE NUMBER: AP212-220
FILE NAME: M0A8E-121
PLOT SCALE: AS INDICATED
PLOT DATE: 4/22/16
SIZE: 34X22

U.S. ARMY ENGINEER DISTRICT
CORPS OF ENGINEERS
OMAHA, NEBRASKA

BURNS & McDONNELL
8201 NORMAN CENTER DR. #300
BLOOMINGTON, MN 55437
952-656-6003

FY15 P-341 CONSTRUCT ADDITION B1134
MINOT AFB, NORTH DAKOTA
PN: QJVF143101

COMMUNICATIONS PLAN - AREA A

SHEET IDENTIFICATION NUMBER
E-121

4/25/2016 4:19:27 AM
COPYRIGHT © 2016 BURNS & McDONNELL ENGINEERING COMPANY, INC.

GENERAL NOTES:

1. SEE SHEETS E-001 AND E-002 FOR GENERAL NOTES, LEGEND AND ABBREVIATIONS.
2. ITEMS SHOWN IN GRAYSCALE ARE EXISTING TO REMAIN.
3. ITEMS SHOWN IN BOLD ARE NEW UNDER THIS CONTRACT.
4. PER NFPA 780; METALLICS MAST SIDE FLASH DISTANCE IS BASED ON THE HEIGHT OF THE BUILDING DIVIDED BY 6. THE MAXIMUM HEIGHT OF THE BUILDING IS APPORXIMATELY 31 FEET, THEREFORE THE MAST MUST BE A MINIMUM OF 5.2 FEET FROM THE EXTERIOR OF THE BUILDING.

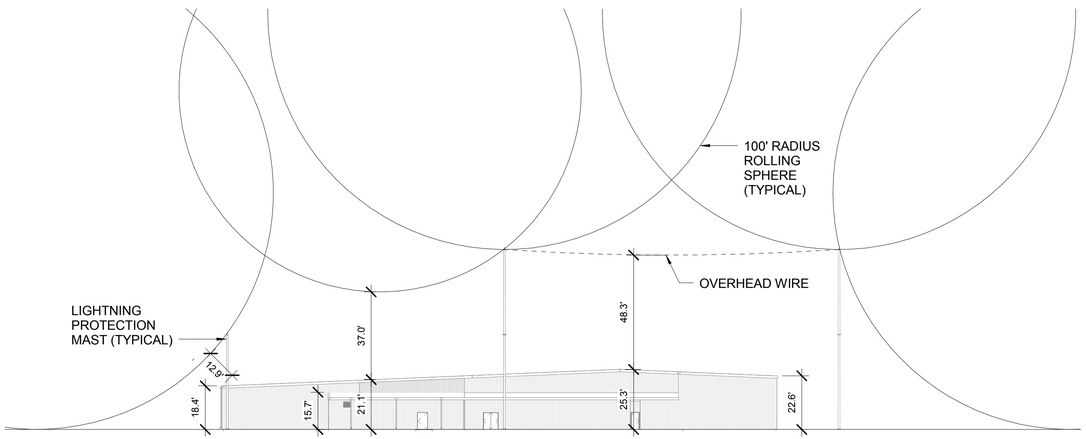

C1 WEST ELEVATION
SCALE: 1/32" = 1'-0"

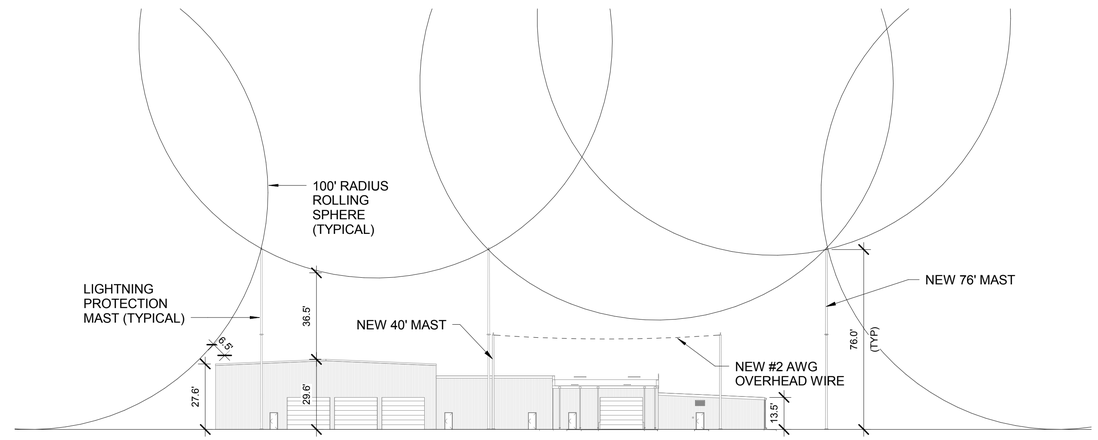

C3 NORTH ELEVATION
SCALE: 1/32" = 1'-0"

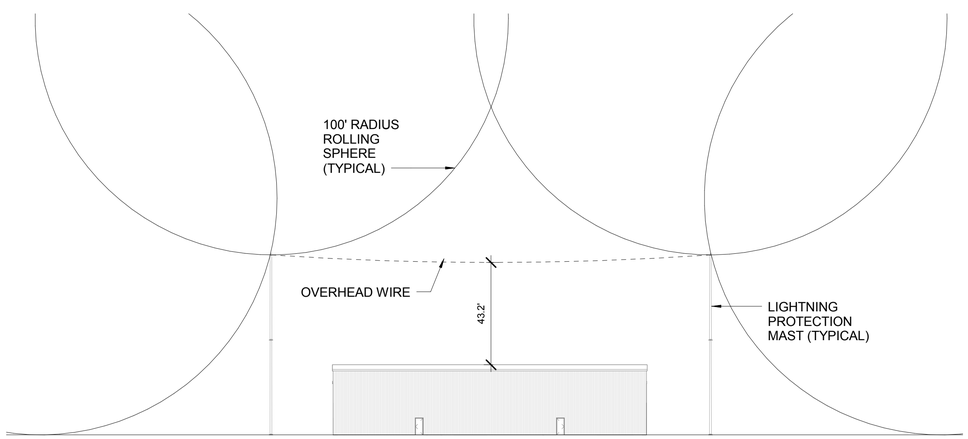

A1 EAST ELEVATION
SCALE: 1/32" = 1'-0"

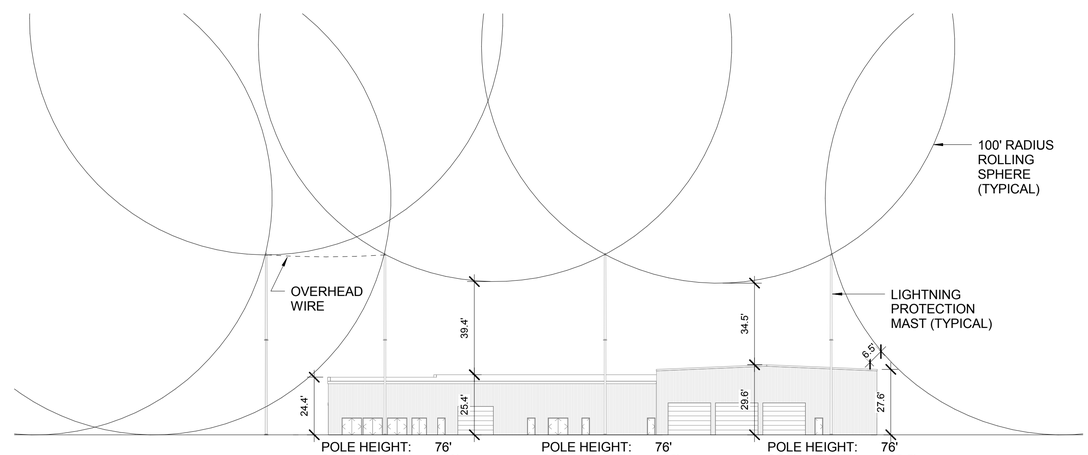

NOTE:
D= MINIMUM SIDEFLASH DISTANCE FROM OH WIRE TO NEAREST STRUCTURE.
L/2 IS REPRESENTATIVE OF THE MIDPOINT OF THE CABLING AND INDICATIVE OF WHERE THE OH WIRE SHALL HAVE THE MOST SAG

POLE HEIGHT: 76'	POLE HEIGHT: 76'	POLE HEIGHT: 76'
SPAN LENGTH: 150'	SPAN LENGTH: 175'	SPAN LENGTH: 185.5'
BLDG HEIGHT: 24.3'	BLDG HEIGHT: 25.3'	BLDG HEIGHT: 29.5'
MIN CLEARANCE: 12.5'	MIN CLEARANCE: 14.6'	MIN CLEARANCE: 15.4'
D = L/6N	D = L/6N	D = L/6N
L = 150/2 = 75	L = 175/2 = 87.5	L = 185.5/2 = 92.8
N = 1	N = 1	N = 1
D = 75/6(1) = 12.5'	D = 87.5/6(1) = 14.6'	D = 92.8/6(1) = 15.4'

A3 SOUTH ELEVATION
SCALE: 1/32" = 1'-0"

US ARMY CORPS OF ENGINEERS
OMAHA DISTRICT

SYM.	DATE	DESCRIPTION	APPR.	SYM.	DATE	DESCRIPTION	APPR.

U.S. ARMY ENGINEER DISTRICT
CORPS OF ENGINEERS
OMAHA, NEBRASKA

BURNS & McDONNELL
8201 NORMAN CENTER DR. #300
BLOOMINGTON, MN 55437
952-656-6003

DESIGNED BY: K VAUGSON	DATE: APRIL 2016
DWN BY: E KREINER	CKD BY: M McDUBRE
SUBMITTED BY: -	SOLICITATION NO.: W91128F-16-B-0007
	CONTRACT NO.: -
FILE NAME: MIMAE-201	FILE NUMBER: AF212-220
SIZE: 34X22	PLOT SCALE: AS INDICATED
	PLOT DATE: 4/22/16

FY15 P-341 CONSTRUCT ADDITION B1134
MINOT AFB, NORTH DAKOTA
PN: QJVF143101

LIGHTNING PROTECTION ELEVATIONS

SHEET IDENTIFICATION NUMBER
E-201

4/25/2016 4:18:30 AM
COPYRIGHT © 2016 BURNS & McDONNELL ENGINEERING COMPANY, INC.

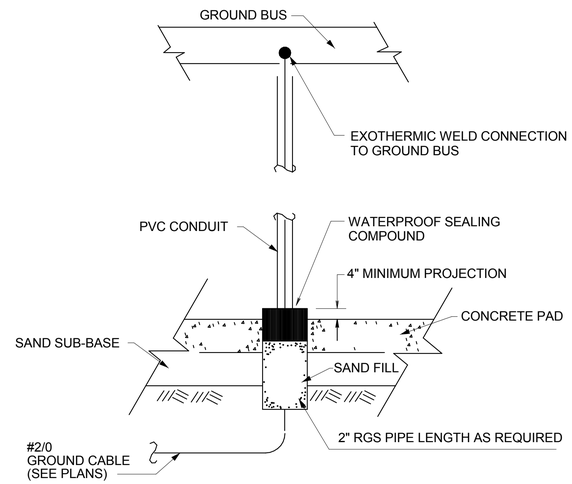

C3 TYPICAL GROUND CABLE SLAB PENETRATION
SCALE: NTS

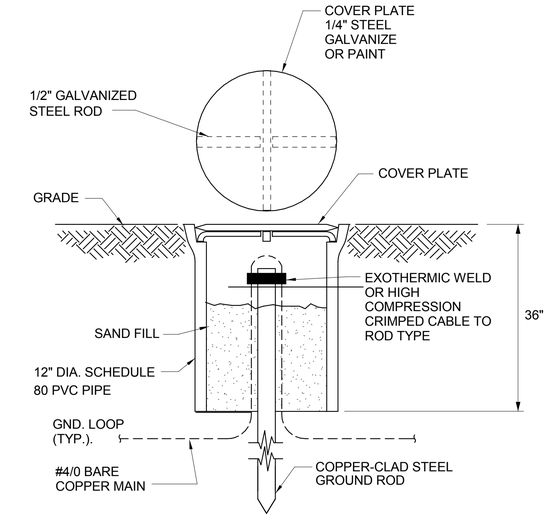

C4 TYPICAL GROUND TEST WELL
SCALE: NTS

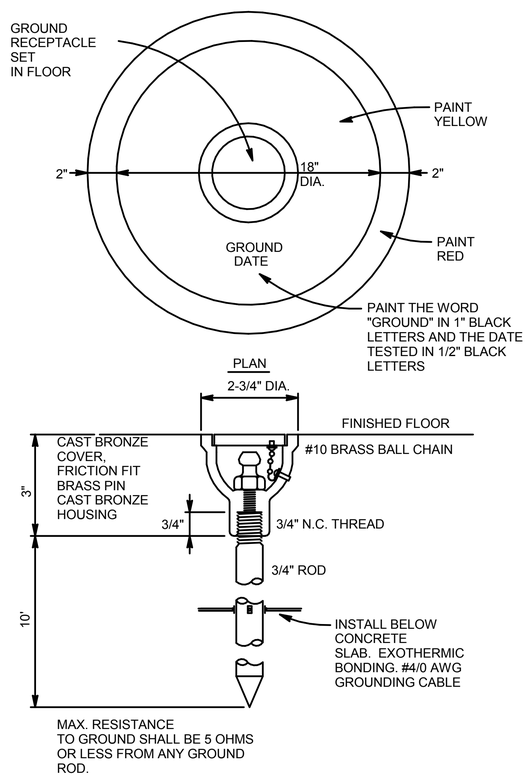

A1 TYPICAL GROUNDING RECEPTACLE
SCALE: NTS

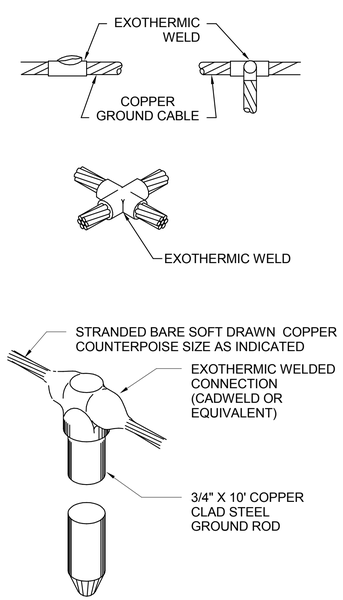

A3 TYPICAL EXOTHERMIC WELDS
SCALE: NTS

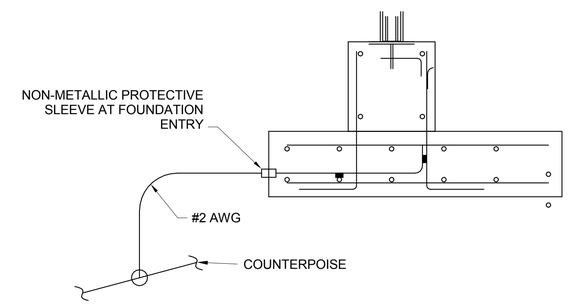

NOTES:
1. BOND #2 AWG COPPER CONDUCTOR TO VERTICAL DOWEL THAT IS BONDED TO STEEL PLATE, AND BOND TO HORIZONTAL REBAR OF AT LEAST 20' LONG.

B4 TYPICAL REBAR BONDING
SCALE: NTS

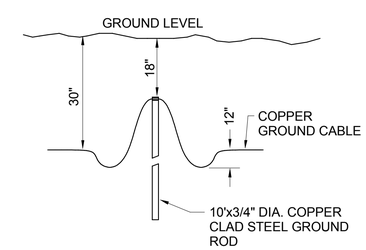

A4 TYPICAL GROUND ROD CONNECTION
SCALE: NTS

US ARMY CORPS OF ENGINEERS
OMAHA DISTRICT

SYM.	DATE	DESCRIPTION	APPR.	SYM.	DATE	DESCRIPTION	APPR.

DESIGNED BY: K.WATSON
DWN BY: E.KREINER
CKD BY: M. MACOUBRIE
SUBMITTED BY: -
DATE: APRIL 2016
SOLICITATION NO.: W9128F-16-B-0007
CONTRACT NO.: -
FILE NAME: MIA8E-501
FILE NUMBER: AF212-220
SIZE: 34X22
PLOT SCALE: AS INDICATED
PLOT DATE: 4/22/16

U.S. ARMY ENGINEER DISTRICT
CORPS OF ENGINEERS
OMAHA, NEBRASKA

BURNS & McDONNELL
8201 NORMAN CENTER DR. #300
BLOOMINGTON, MN 55437
952-656-6003

FY15 P-341 CONSTRUCT ADDITION B1134
MINOT AFB, NORTH DAKOTA
PN: QJVF143101

GROUNDING AND LIGHTNING PROTECTION DETAILS

SHEET IDENTIFICATION NUMBER
E-501

4/25/2016 4:18:31 AM
COPYRIGHT © 2016 BURNS & McDONNELL ENGINEERING COMPANY, INC.

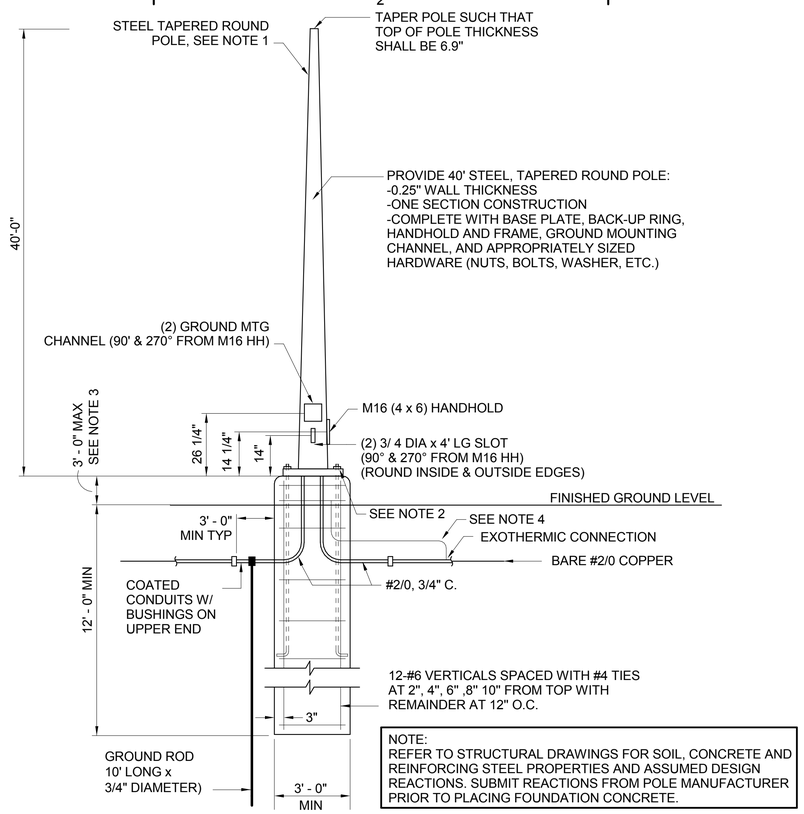

NOTE:
REFER TO STRUCTURAL DRAWINGS FOR SOIL, CONCRETE AND REINFORCING STEEL PROPERTIES AND ASSUMED DESIGN REACTIONS. SUBMIT REACTIONS FROM POLE MANUFACTURER PRIOR TO PLACING FOUNDATION CONCRETE.

NOTE: DETAIL FOR REFERENCE ONLY

B1 TYPICAL 40' STEEL MAST

SCALE: 12" = 1'-0"

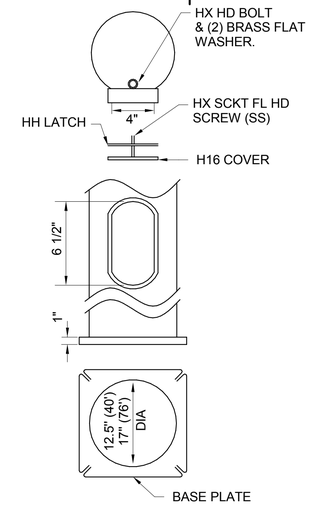

POLE BASE & HANDHOLE DETAIL
(NOT TO SCALE)

FIGURE 1

NOTES:

1. STEEL POLE SHALL BE 3 GAUGE (MINIMUM THICKNESS THAT IS ACCEPTABLE IS 3/16"). THE BOTTOM DIAMETER SHALL BE APPROXIMATELY 12.5" (40') & 17" (76') WITH IT TAPERING TOWARD THE TOP. THE POLE SHALL BE GALVANIZED. THE POLE SHALL BE PROVIDED WITH VIBRATION DAMPENING. A MINIMUM OF FOUR DAMPENDERS. ONE SOURCE FOR THE POLE IS LUMA SALES AT 952-995-6501.
2. PROVIDE TWO GROUNDING LUGS IN THE POLE AT OPPOSITE SIDES. LUG SHALL BE SUITABLE IN SIZE FOR THE COUNTER POISE CONDUCTOR AND SHALL BE SOLIDLY WELDED TO THE POLE.
3. REBAR IN THE CONCRETE SHALL BE BONDED TO THE COUNTERPOISE.
4. COUNTERPOISE CONDUCTOR SHALL BE BROUGHT UP INTO THE POLE. THROUGH A PVC CONDUIT OR RIGID STEEL CONDUIT THAT IS PVC COATED. THE RIGID STEEL CONDUIT SHALL BE BONDED TO THE COUNTERPOISE CONDUCTOR WHERE IT LEAVES AND ENTERS THE CONDUIT. EACH COUNTERPOISE CONDUCTOR SHALL BE TERMINATED IN ITS OWN GROUNDING LUG AND THEN THE LUG BRAZED OR WELDED.

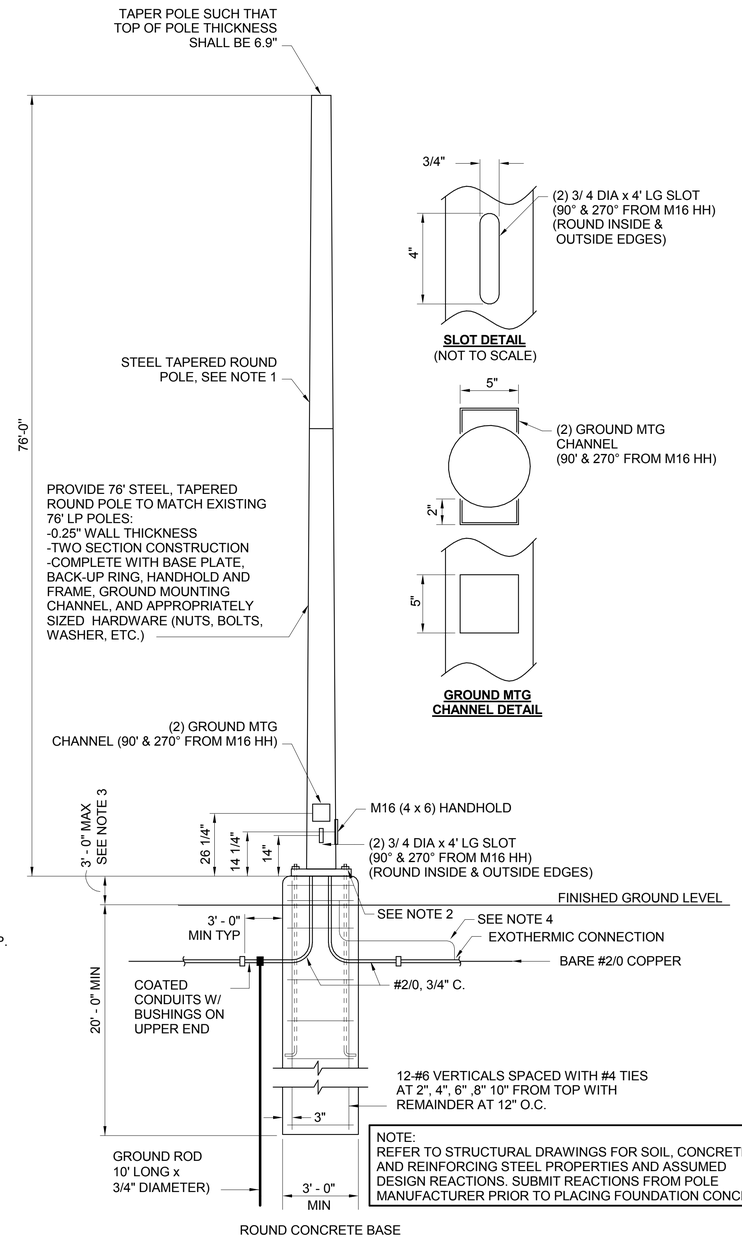

SLOT DETAIL
(NOT TO SCALE)

GROUND MTG CHANNEL DETAIL

NOTE:
REFER TO STRUCTURAL DRAWINGS FOR SOIL, CONCRETE AND REINFORCING STEEL PROPERTIES AND ASSUMED DESIGN REACTIONS. SUBMIT REACTIONS FROM POLE MANUFACTURER PRIOR TO PLACING FOUNDATION CONCRETE.

NOTE: DETAIL FOR REFERENCE ONLY

A4 TYPICAL 76' STEEL MAST

SCALE: NTS

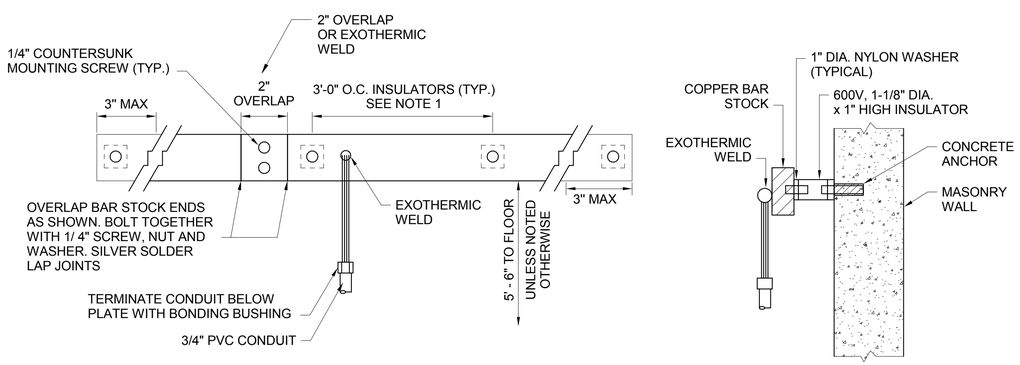

ELEVATION

SECTION

NOTES:

1. END OF BUS BARS OR FREE ENDS SHALL BE SUPPORTED NOT TO EXCEED 3".
2. INDIVIDUAL GROUND CABLE AND CONNECTIONS ARE NOT SHOWN.

A1 STATIC GROUND BUS DETAIL

SCALE: NTS

US ARMY CORPS OF ENGINEERS
OMAHA DISTRICT

SYM.	DATE	DESCRIPTION	SYM.	DATE	DESCRIPTION	APPR.

U.S. ARMY ENGINEER DISTRICT
CORPS OF ENGINEERS
OMAHA, NEBRASKA

BURNS & McDONNELL
8201 NORMAN CENTER DR. #300
BLOOMINGTON, MN 55437
952-656-6003

DESIGNED BY: K.WATSON
DWN BY: E.KREINER
CKD BY: M.MCDUBRE
SUBMITTED BY: -
DATE: APRIL 2016
SOLICITATION NO.: W912BF-16-B-0007
CONTRACT NO.: -
FILE NAME: M0A3E-502
FILE NUMBER: AF212-220
SIZE: 34X22
PLOT SCALE: AS INDICATED
PLOT DATE: 4/22/16

FY15 P-341 CONSTRUCT ADDITION B1134
MINOT AFB, NORTH DAKOTA
PN: QJVF143101

GROUNDING AND LIGHTNING PROTECTION DETAILS

SHEET IDENTIFICATION NUMBER
E-502

4/25/2016 4:18:32 AM
COPYRIGHT © 2016 BURNS & McDONNELL ENGINEERING COMPANY, INC.

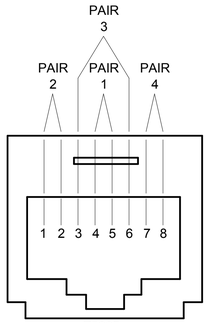

PAIR ID	PIN #
T1	4
R1	5
T2	1
R2	2
T3	3
R3	6
T4	7
R4	8

C1 TYP. MODULAR PLUG PIN OUT, T-568-B
SCALE: NTS

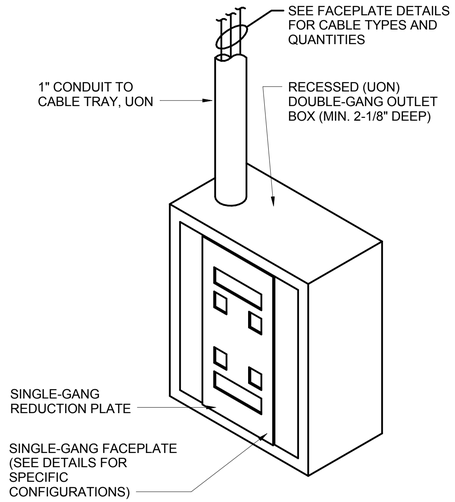

NOTES:

1. MOUNT OUTLET BOX AT 18" AFF UON.

C2 TYP. COMMUNICATIONS BACKBOX
SCALE: NTS

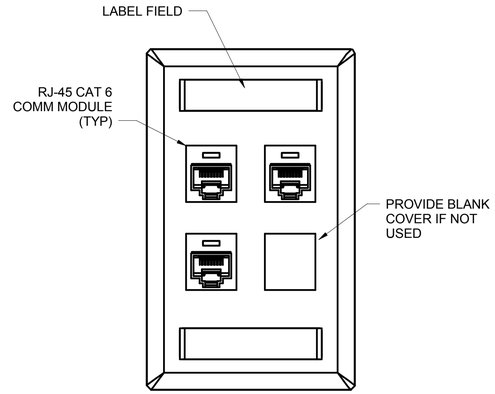

PROVIDE CAT-6 CABLES FROM OUTLET TO PATCH PANELS IN COMMUNICATIONS ROOM.

##	DESCRIPTION
1A	(1) DATA
2A	(2) VOICE, (1) DATA

C3 TYP. WORKSTATION DATA/VOICE
SCALE: NTS

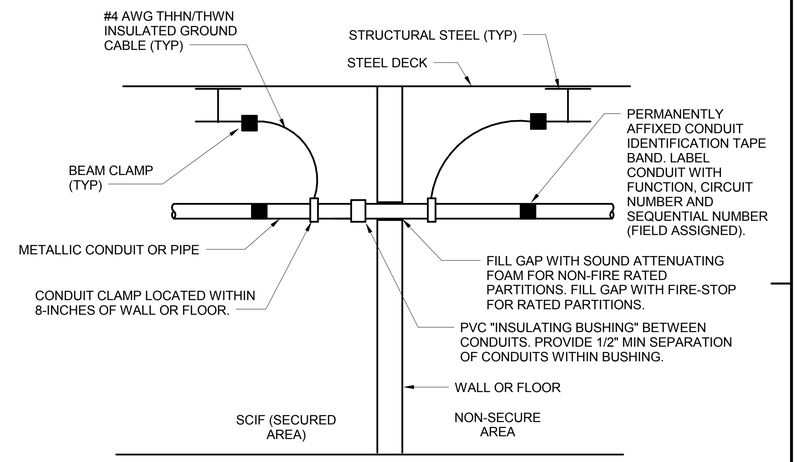

NOTES:

1. SCIF (SECURED AREA) ACCREDITATION REQUIRES THAT PENETRATIONS SUCH AS THE DETAIL SHOWN BE ACCESSIBLE FOR INSPECTION BY PROGRAM SECURITY. COORDINATE WITH CONTRACTING OFFICER DURING INSTALLATION AND BONDING OF CONDUITS CROSSING BETWEEN SECURED AREAS.
2. CONTRACTOR SHALL KEEP A LOG OF ALL CONDUIT PENETRATIONS INDICATING FIELD ASSIGNED CONDUIT NUMBER, LOCATION, PURPOSE, AND INDICATION THAT THE INSTALLATION HAS BEEN COORDINATED WITH CONTRACTING OFFICER AND PROGRAM SECURITY.

B4 TYPICAL OF PIPE AND CONDUIT GROUNDING FOR SCIF SPACES
SCALE: NTS

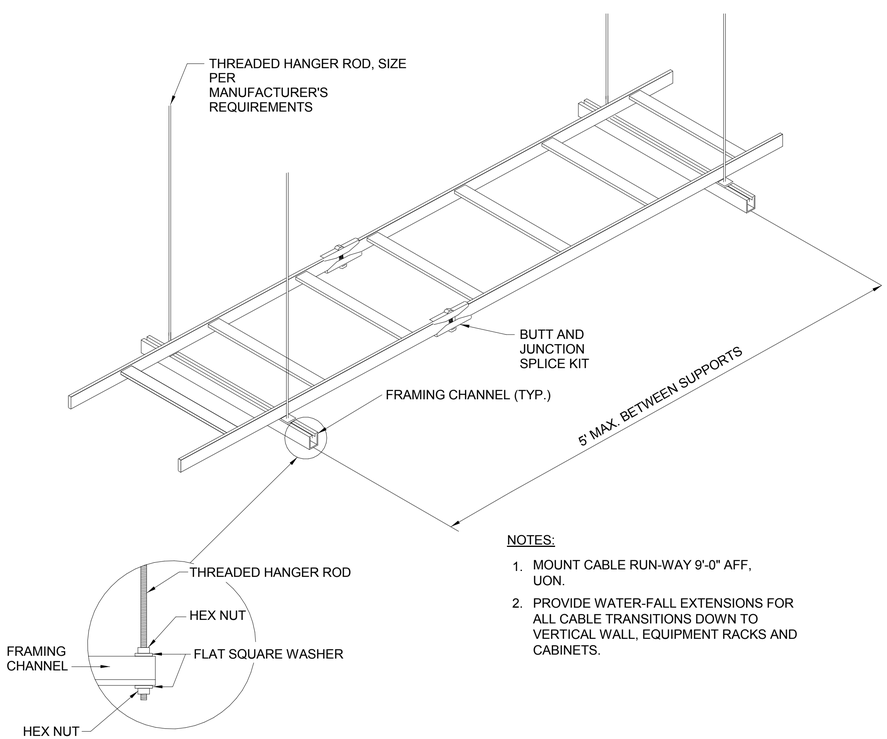

NOTES:

1. MOUNT CABLE RUN-WAY 9'-0" AFF, UON.
2. PROVIDE WATER-FALL EXTENSIONS FOR ALL CABLE TRANSITIONS DOWN TO VERTICAL WALL, EQUIPMENT RACKS AND CABINETS.

A1 TYPICAL CABLE RUN-WAY SUPPORT
SCALE: NTS

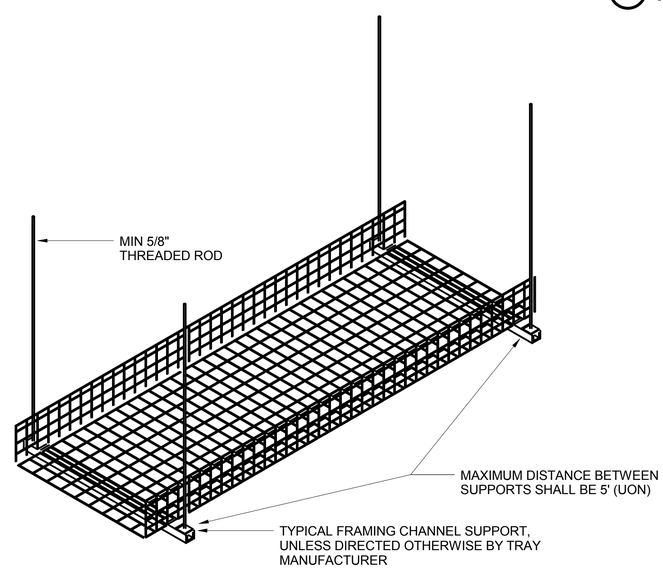

A3 TYPICAL BASKET CABLE TRAY DETAIL
SCALE: NTS

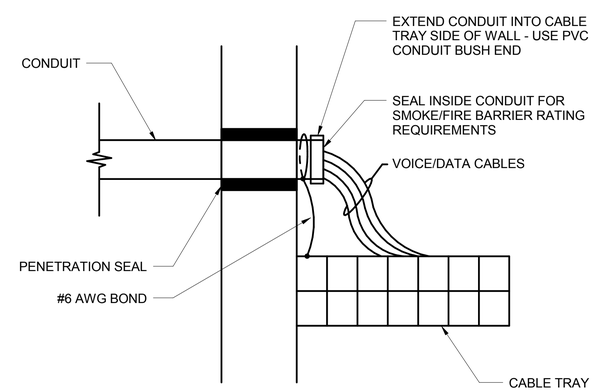

A4 TYPICAL CONDUIT TO CABLE TRAY TRANSITION
SCALE: NTS

US ARMY CORPS OF ENGINEERS
OMAHA DISTRICT

SYM.	DATE	DESCRIPTION	SYM.	DATE	DESCRIPTION	APPR.

DESIGNED BY: K WILSON | DATE: APRIL 2016
DWN BY: E KREINER | CKD BY: M COLBRIE | SOLICITATION NO.: W912BF-16-B-0007
SUBMITTED BY: - | CONTRACT NO.: -
FILE NAME: MI48E-503 | FILE NUMBER: AF212-220
SIZE: 34X22 | PLOT SCALE: AS INDICATED | PLOT DATE: 4/22/16

U.S. ARMY ENGINEER DISTRICT
CORPS OF ENGINEERS
OMAHA, NEBRASKA

BURNS & McDONNELL
8201 NORMAN CENTER DR. #300
BLOOMINGTON, MN 55437
952-656-6003

FY15 P-341 CONSTRUCT ADDITION B1134
MINOT AFB, NORTH DAKOTA
PN: QJVF143101

COMMUNICATION DETAILS

SHEET IDENTIFICATION NUMBER
E-503

4/25/2016 4:18:33 AM
COPYRIGHT © 2016 BURNS & McDONNELL ENGINEERING COMPANY, INC.

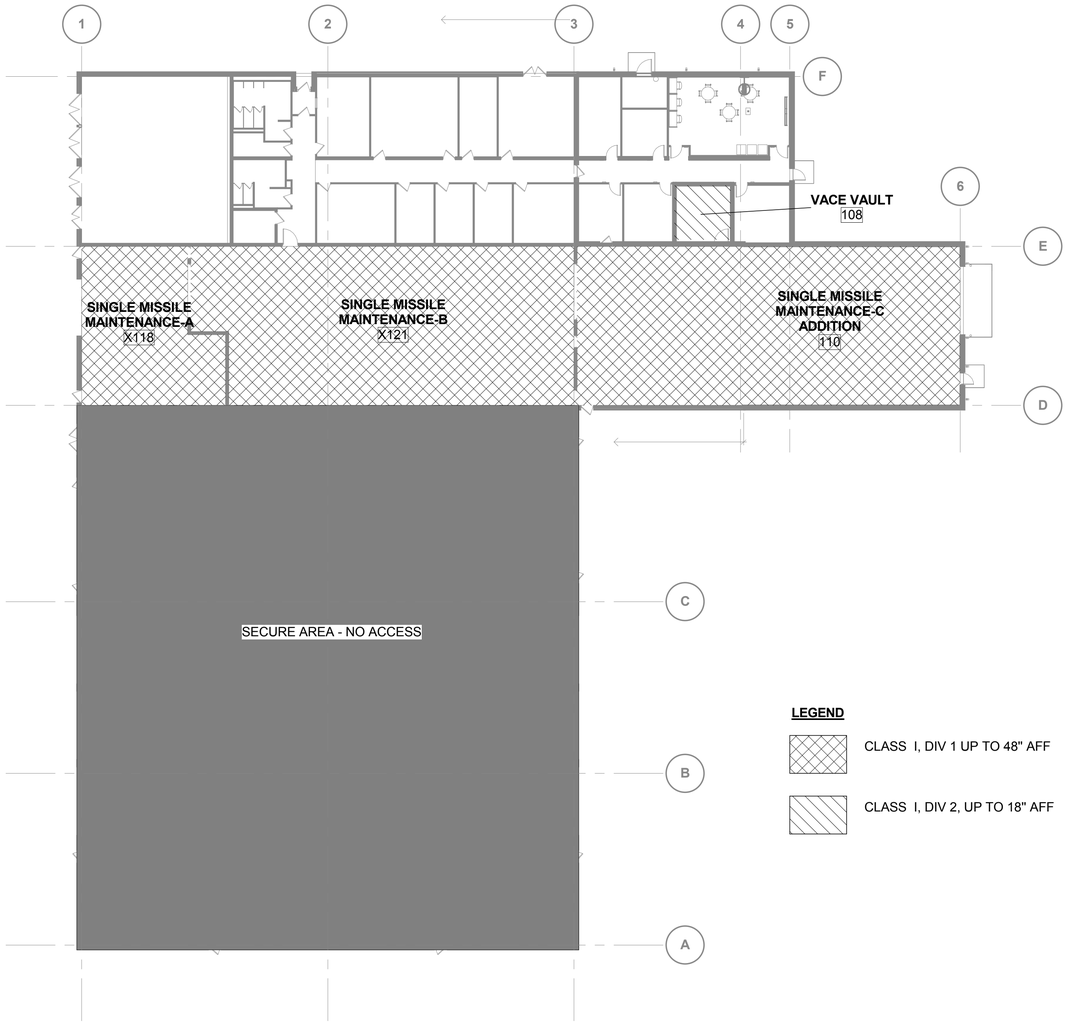

LEGEND

CLASS I, DIV 1 UP TO 48" AFF

CLASS I, DIV 2, UP TO 18" AFF

B1 HAZARDOUS LOCATIONS

SCALE: 1" = 20'-0"

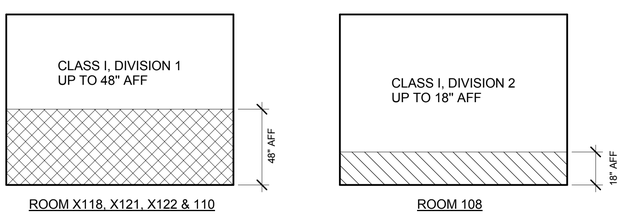

ROOM X118, X121, X122 & 110

ROOM 108

A2 HAZARDOUS AREA DETAILS

SCALE: NTS

GENERAL NOTES:

1. HAZARDOUS CLASSIFICATIONS WITHIN THE BUILDINGS SHALL BE PER NEC ARTICLE 500. ALL WIRING IN THOSE AREAS SHALL MEET THE REQUIREMENTS OF THE NEC.
2. CONTRACTOR SHALL PROVIDE SIGNAGE IN VACE VAULT WITH THE FOLLOWING STATEMENT: "THIS ROOM IS A CLASS I, DIV 2 HAZARDOUS AREA. SPECIAL CARE SHALL BE TAKEN SUCH THAT NO MECHANICAL AND ELECTRICAL DEVICES THAT CAN CAUSE A SPARK (MOTORS, COMPUTERS, FANS, ETC.) SHALL BE STORED OR MOUNTED AT A MINIMUM OF 24" ABOVE THE FLOOR. "

US ARMY CORPS OF ENGINEERS
OMAHA DISTRICT

SYM.	DATE	DESCRIPTION	APPR.	SYM.	DATE	DESCRIPTION	APPR.

DESIGNED BY: K.WATSON
DWN BY: E.KREINER
CKD BY: M. MACOUBRIE
SUBMITTED BY: -
FILE NAME: MIA8E-504
SIZE: 34X22
PLOT SCALE: AS INDICATED
DATE: APRIL 2016
SOLICITATION NO.: W9128F-16-B-0007
CONTRACT NO.: -
FILE NUMBER: AF212-220
PLOT DATE: 4/22/16

U.S. ARMY ENGINEER DISTRICT
CORPS OF ENGINEERS
OMAHA, NEBRASKA

BURNS & McDONNELL
8201 NORMAN CENTER DR. #300
BLOOMINGTON, MN 55437
952-656-6003

FY15 P-341 CONSTRUCT ADDITION B1134
MINOT AFB, NORTH DAKOTA
PN: QJVF143101

HAZARDOUS CLASSIFICATION DETAILS

SHEET IDENTIFICATION NUMBER
E-504

4/25/2016 4:18:34 AM
COPYRIGHT © 2016 BURNS & McDONNELL ENGINEERING COMPANY, INC.

GENERAL NOTES:

1. SEE SHEETS E-001 AND E-002 FOR GENERAL NOTES, LEGEND AND ABBREVIATIONS.
2. ITEMS SHOWN IN GRAYSCALE ARE EXISTING TO REMAIN.
3. ITEMS SHOWN IN BOLD ARE NEW UNDER THIS CONTRACT.

KEYED NOTES:

1. PROVIDE NEW FUSED SWITCHES IN EXISTING SWITCHBOARD MSB. CONTRACTOR TO CONFIRM EXACT MAKE/MODEL/AIC RATING FOR COMPATIBILITY WITH EXISTING SWITCHBOARD.

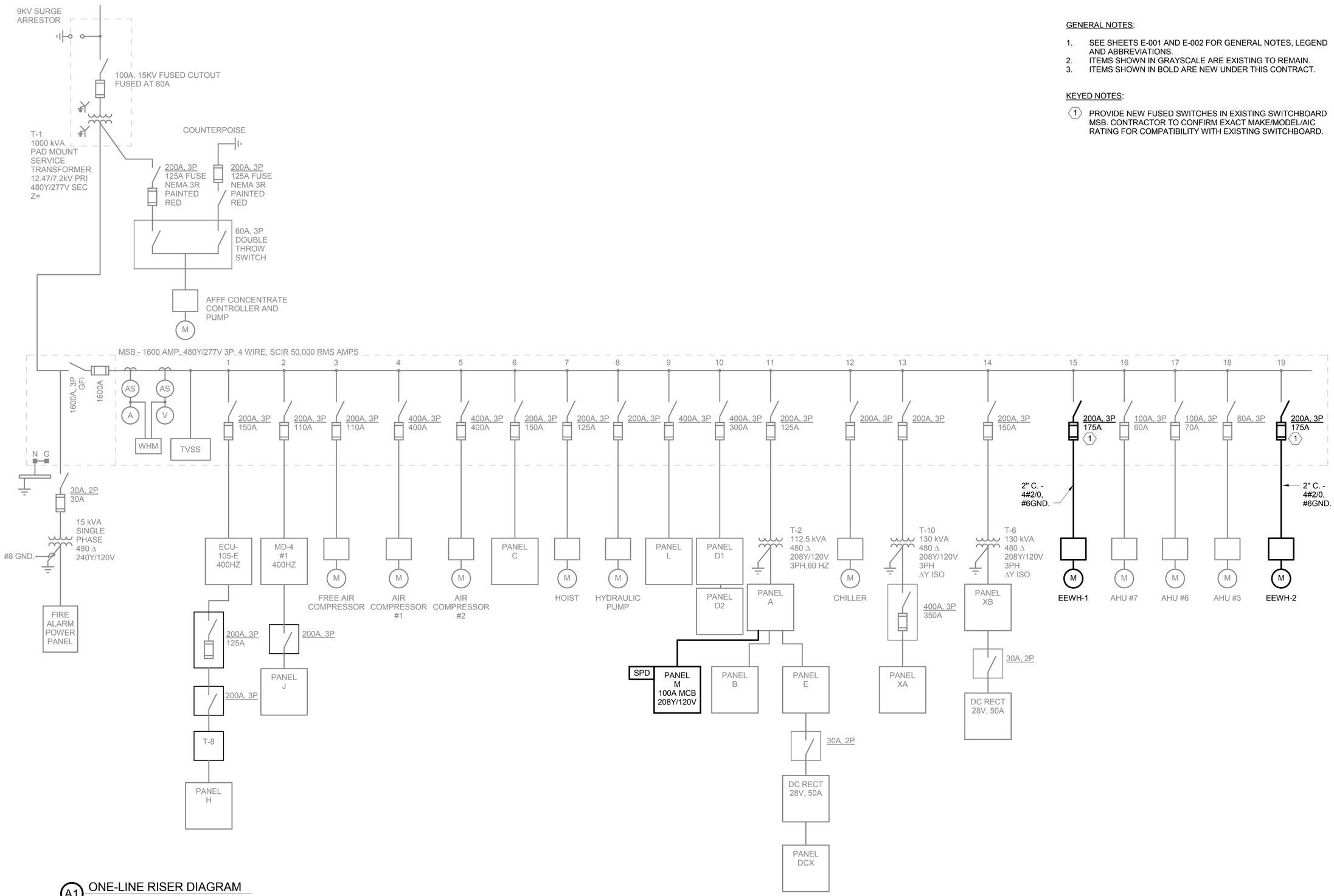

A1 ONE-LINE RISER DIAGRAM
SCALE: NTS

US ARMY CORPS OF ENGINEERS
OMAHA DISTRICT

SYM.	DATE	DESCRIPTION	APPR.	SYM.	DATE	DESCRIPTION	APPR.

DESIGNED BY: K.WATSON
DWN BY: E.KREINER
CKD BY: M. MACOUBRIE
SUBMITTED BY: -
DATE: APRIL 2016
SOLICITATION NO.: W9128F-16-B-0007
CONTRACT NO.: -
FILE NUMBER: AF212-220
FILE NAME: MIA8E-601
PLOT SCALE: AS INDICATED
SIZE: 34X22
PLOT DATE: 4/22/16

U.S. ARMY ENGINEER DISTRICT
CORPS OF ENGINEERS
OMAHA, NEBRASKA

BURNS & McDONNELL
8201 NORMAN CENTER DR. #300
BLOOMINGTON, MN 55437
952-656-6003

FY15 P-341 CONSTRUCT ADDITION B1134
MINOT AFB, NORTH DAKOTA
PN: QJVF143101

ELECTRICAL RISER DIAGRAM

SHEET IDENTIFICATION NUMBER
E-601

4/25/2016 4:18:34 AM
COPYRIGHT © 2016 BURNS & McDONNELL ENGINEERING COMPANY, INC.

COMMUNICATIONS - ROOM 103 PORT COUNTS					
Space: Number	Space: Name	OUTLET TYPE	OUTLET QUANTITY	DATA DROPS	VOICE DROPS
101	CORR	1A	1	1	0
102	BREAK RM	2A	5	10	5
104	LOW BAY NCOIC	2A	2	4	2
105	OFFICE 1	2A	4	8	4
106	OFFICE 2	2A	2	4	2
107	HIGH BAY NCOIC	2A	2	4	2
108	VACE VAULT	S	4	8	4
109	VACE OFFICE	2A	2	4	2
110	SINGLE MISSILE MAINTENANCE-C ADDITION	2A	2	4	2
X122	SINGLE MISSILE MAINTENANCE-C	1A	1	1	0
				48	23

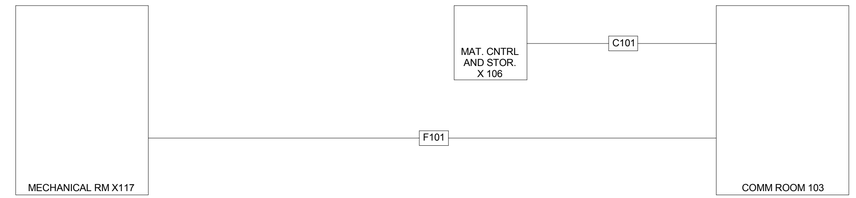

COMMUNICATIONS RISER DIAGRAM

FIBER OPTIC BACKBONE CABLE & TERMINATION SCHEDULE													
				FROM					TO				
CABLE LABEL	FO STRANDS	TYPE	DESCRIPTION	ROOM	ROW	RACK	PATCH PANEL	PORTS	ROOM	ROW	RACK	PATCH PANEL	PORTS
F101	12	SM	INTRABUILDING	X117					103				

COPPER BACKBONE CABLE & TERMINATION SCHEDULE													
				FROM					TO				
CABLE LABEL	COPPER PAIRS	TYPE	DESCRIPTION	ROOM	ROW	RACK	PATCH PANEL	PORTS	ROOM	ROW	RACK	PATCH PANEL	PORTS
C101	4	PLENUM	CATEGORY 6	103					X106				

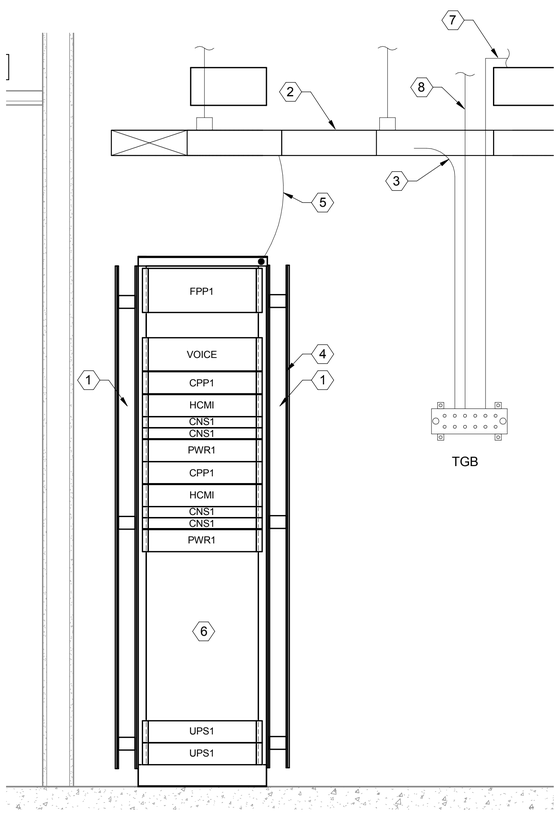

A1 RACK ELEVATION - COMM 103
SCALE: 1" = 1'-0"

KEYED NOTES THIS DETAIL:

1. PROVIDE VERTICAL CABLE MANAGEMENT BOTH SIDES OF RACK
2. PROVIDE CABLE RUN-WAY SUSPENDED AT 8'-6" AFF ABOVE EQUIPMENT RACKS.
3. PROVIDE #2 AWG INSULATED COMMON BOND NETWORK CONDUCTOR. PROVIDE ENTIRE LENGTH OF CABLE RUN-WAY.
4. PROVIDE COMMUNICATION RACK GROUNDING STRIP KIT, PROVIDE (1) PER EQUIPMENT RACK.
5. PROVIDE #6 AWG RACK JUMPER KIT, FROM COMMON BOND NETWORK TO EQUIPMENT RACK, PROVIDE (1) PER EQUIPMENT RACK.
6. SPACE FOR GFGI PHONE/VOIP EQUIPMENT.
7. TELECOMMUNICATION BONDING BACKBONE, REFER TO E-102 FOR ADDITIONAL INFORMATION
8. #6 AWG INSULATED BOND TO BUILDING STEEL.

RACK EQUIP IDENTIFICATION	EQUIPMENT DESCRIPTION
FPP1	72 PORT LC DUPLEX RACK MOUNTED FIBER ENCLOSURE
VOICE	RACK MOUNT VOICE GRAD 110 BLOCK*
CPP1	48 PORT CATEGORY 6 RACK MOUNTED PATCH PANEL
CNS1	COPPER NETWORK SWITCH*
HCMI	HORIZONTAL CABLE MANAGEMENT*
PWR1	POWER DISTRIBUTION UNIT*
UPS1	UNINTERRUPTABLE POWER SOURCE*

*DENOTES EQUIPMENT THAT IS GOVERNMENT FURNISHED, GOVERMENT INSTALLED

US ARMY CORPS OF ENGINEERS
OMAHA DISTRICT

SYM.	DATE	DESCRIPTION	APPR.

SYM.	DATE	DESCRIPTION	APPR.

U.S. ARMY ENGINEER DISTRICT
CORPS OF ENGINEERS
OMAHA, NEBRASKA

BURNS & McDONNELL
8201 NORMAN CENTER DR. #300
BLOOMINGTON, MN 55437
952-656-6003

DESIGNED BY: K WILKSON
DWN BY: E KREINER
CKD BY: M MCDUBRE
SUBMITTED BY: -
DATE: APRIL 2016
SOLICITATION NO.: W912BF-16-B-0007
CONTRACT NO.: -
FILE NAME: MIMAE-602
FILE NUMBER: AF212-220
SIZE: 34X22
PLOT SCALE: AS INDICATED
PLOT DATE: 4/22/16

FY15 P-341 CONSTRUCT ADDITION B1134
MINOT AFB, NORTH DAKOTA
PN: QJVF143101

COMMUNICATION RISER DIAGRAM

SHEET IDENTIFICATION NUMBER
E-602

4/25/2016 4:18:35 AM
COPYRIGHT © 2016 BURNS & McDONNELL ENGINEERING COMPANY, INC.

MECHANICAL/ELECTRICAL CONNECTION SCHEDULE							
			DISCONNECT TYPE				
DEVICE NAME	VOLTAGE	PHASE	MANUAL MOTOR SWITCH WITH THERMAL OVERLOAD	NON-FUSED	FUSED	STARTER / UNIT CONTROLLER	NOTES
ACCU-1	208 V	1	DIV 26	-	-	DIV 26	
ACCU-2	208 V	1	DIV 26	-	-	DIV 26	
ACCU-10	480 V	3	-	-	DIV 26	DIV 26	CONTRACTOR OPTION TO PROVIDE COMBINATION MOTOR STARTER / DISCONNECT
AHU-10	480 V	3	-	-	DIV 26	DIV 26	CONTRACTOR OPTION TO PROVIDE COMBINATION MOTOR STARTER / DISCONNECT
AHU-11	480 V	3	-	-	DIV 26	DIV 26	CONTRACTOR OPTION TO PROVIDE COMBINATION MOTOR STARTER / DISCONNECT
CRU-1	208 V	1	DIV 26	-	-	DIV 26	
CRU-2	208 V	1	DIV 26	-	-	DIV 26	
EEWH-1	480 V	3	-	DIV 23	-	-	SINGLE POINT CONNECTION. EEWH PROVIDED WITH INTEGRAL DISCONNECT
EEWH-2	480 V	3	-	DIV 23	-	-	SINGLE POINT CONNECTION. EEWH PROVIDED WITH INTEGRAL DISCONNECT
EF-1	480 V	3	-	DIV 26	-	DIV 26	CONTRACTOR OPTION TO PROVIDE COMBINATION MOTOR STARTER / DISCONNECT
EF-2	480 V	3	-	DIV 26	-	DIV 26	CONTRACTOR OPTION TO PROVIDE COMBINATION MOTOR STARTER / DISCONNECT
EWH-1	120 V	1	SEE NOTE	-	-	-	CORD AND PLUG VIA RECEPTACLE
GIH-1	120 V	1	SEE NOTE	-	-	-	CORD AND PLUG VIA RECEPTACLE
RF-10	120 V	1	DIV 26	-	-	DIV 26	

NOTES:

1. ALL ELECTRICAL EQUIPMENT TO BE PROVIDED BY DIVISION 26 CONTRACTOR UON. EQUIPMENT FURNISHED BY DIVISION 26 AND INSTALLED BY ELECTRICAL CONTRACTOR.
2. WHERE NOTED AS 'DIV 23', EQUIPMENT IS FURNISHED BY DIVISION 23 AND INSTALLED BY ELECTRICAL CONTRACTOR.
3. CONTRACTOR SHALL CONFIRM WITH APPROVED MECHANICAL EQUIPMENT SHOP DRAWINGS PRIOR TO ORDERING DISCONNECTS AND/OR CONTROLLERS.
4. PROVIDE FUSE SIZE PER MANUFACTURER'S RECOMMENDATION.

LIGHTING FIXTURE SCHEDULE									
		LAMP INFORMATION			FIXTURE INFORMATION				
TYPE	MODIFIER	QTY	WATTAGE	TYPE	WATTAGE	COLOR TEMP	MOUNTING	DESCRIPTION	MANUFACTURER & MODEL
A1	E	2	32	T8	64 W	3500 K	CEILING, SURFACE	1'x4' SURFACE MOUNT VOLUMETRIC FIXTURE. PROVIDE WITH EMERGENCY BATTERY BACK-UP	LITHONIA AVSM 2 32 MDR MVOLT GEB10IS EL
A2		2	32	T8	64 W	3500 K	CEILING, RECESSED	2'x4' RECESSED VOLUMETRIC FIXTURE TO MATCH EXISTING OFFICE FIXTURES. 2-T8 LAMPS.	LITHONIA 2AV G 2 MDR MVOLT GEB10IS
A2	E	2	32	T8	64 W	3500 K	CEILING, RECESSED	2'x4' RECESSED VOLUMETRIC FIXTURE TO MATCH EXISTING OFFICE FIXTURES. 2-T8 LAMPS. PROVIDE WITH EMERGENCY BATTERY BACK-UP.	LITHONIA 2AV G 2 MDR MVOLT GEB10IS EL14
A3		3	32	T8	64 W	3500 K	CEILING, RECESSED	2'x4' RECESSED VOLUMETRICFIXTURE TO MATCH EXISTING OFFICE FIXTURES. 3-T8 LAMPS.	LITHONIA 2AV G 3 MDR MVOLT GEB10IS
A3	E	3	32	T8	64 W	3500 K	CEILING, RECESSED	2'x4' RECESSED VOLUMETRIC FIXTURE TO MATCH EXISTING OFFICE FIXTURES. 3-T8 LAMPS. PROVIDE WITH EMERGENCY BATTERY BACK-UP	LITHONIA 2AV G 3 MDR MVOLT GEB10IS
A4		6	54	T5HO	324 W	3500 K	PENDANT	2'X4' HIGH BAY FIXTURE, WIDE DISTRIBUTION, WITH 6-T5HO LAMPS. PROVIDE WITH CLEAR ACRYLIC LENS AND WIRE GUARD.	LITHONIA IBZ 654L WD ACL WGX
A4	E	6	54	T5HO	324 W	3500 K	PENDANT	2'X4" HIGH BAY FIXTURE, WIDE DISTRIBUTION, WITH 6-T5HO LAMPS. PROVIDE WITH CLEAR ACRYLIC LENS AND WIRE GUARD. PROVIDE WITH EMERGENCY BATTERY BALLAST BACK-UP WITH SELF-DIAGNOSTICS.	LITHONIA IBZ 654L WD ACL WGX EL14SD
B1	E	2	32	T8	64 W	3500 K	PENDANT	4' HEAVY DUTY, INDUSTRIAL STRIP AND 2-T8 LAMPS. PROVIDE WITH WIRE GUARD AND EMERGENCY BATTERY BACK-UP.	LITHONIA Z 2 32 MVOLT GEB10IS EL55
B2		1	17	T8	17 W	3500 K	SURFACE	18" SURFACE MOUNTED UNDER CABINET LIGHT WITH (1) 17W T8 LAMP. ROCKER SWITCH CONTROLLED.	LITHONIA UC818
E1		1	5	LED	5 W	3500 K	WALL, CEILING	EXIT SIGN WITH BRUSHED ALUMINUM FINISH, SINGLE FACE, RED LETTERS, AND EMERGENCY BATTERY BACK-UP	LITHONIA LQC1R
H1E		1	65	LED	65 W	4000 K	WALL, SURFACE	EXTERIOR WALL PACK, TYPE 3, WITH INTEGRAL PHOTOCELL AND EMERGENCY BATTERY BACK-UP	KIM LIGHTING WD - LED 14D3 60L 4K DB
H2		1	127	LED	127 W	4000 K	WALL, SURFACE	EXTERIOR WALL PACK, TYPE 3, WITH INTEGRAL PHOTOCELL.	KIM LIGHTING WD - LED 18D3 120L 4K DB

NOTES:

1. MANUFACTURER AND MODEL SHOWN ARE THE BASIS OF DESIGN. SUBSTITUTIONS ARE ALLOWED. ALL SUBSTITUTIONS SHALL HAVE THE SAME FEATURES, RATINGS, AND STYLE AS THE MODEL LISTED. ANY DEVIATIONS FROM FIXTURE RATINGS, INCLUDING INPUT VA AND LUMEN OUTPUT, SHALL REQUIRE THE CONTRACTOR TO PERFORM A LIGHTING ANALYSIS TO DETERMINE IF THE INSTALLATION MEETS THE DESIGN INTENT.
2. SEE DRAWINGS E-001 & E-002 FOR LEGEND AND GENERAL NOTES.
3. ALL FIXTURES SHALL BE PROVIDED WITH MULTI-VOLTAGE BALLASTS.
4. WHERE DUAL LEVEL LIGHTING IS INDICATED AND THERE ARE 2 OR MORE LIGHTING FIXTURES WITH-IN THE SPACE, CONTRACTOR SHALL USE TANDEM-WIRED BALLASTS.

4/25/2016 4:18:36 AM
COPYRIGHT © 2016 BURNS & McDONNELL ENGINEERING COMPANY, INC.

US ARMY CORPS OF ENGINEERS
OMAHA DISTRICT

SYM.	DATE	DESCRIPTION	APPR.

SYM.	DATE	DESCRIPTION	APPR.

DESIGNED BY: K.WILSON
DWN BY: E.KREINER
CKD BY: M.CUBBIE
SUBMITTED BY: -
DATE: APRIL 2016
SOLICITATION NO.: W912BF-16-B-0007
CONTRACT NO.: -
FILE NAME: M9A8E-701
FILE NUMBER: AF212-220
SIZE: 34X22
PLOT SCALE: AS INDICATED
PLOT DATE: 4/22/16

U.S. ARMY ENGINEER DISTRICT
CORPS OF ENGINEERS
OMAHA, NEBRASKA

BURNS & McDONNELL
8201 NORMAN CENTER DR. #300
BLOOMINGTON, MN 55437
952-656-6003

FY15 P-341 CONSTRUCT ADDITION B1134
MINOT AFB, NORTH DAKOTA
PN: QJVF143101

ELECTRICAL SCHEDULES

SHEET IDENTIFICATION NUMBER
E-701

GENERAL NOTES:

1. SEE SHEETS E-001 AND E-002 FOR GENERAL NOTES, LEGEND AND ABBREVIATIONS.
2. SEE SHEET ED701 FOR EXISTING PANELBOARD SCHEDULES

KEYED NOTES:

(1) EXISTING CIRCUIT BREAKER TO BE RE-USED FOR NEW BRANCH CIRCUIT LOAD AS SHOWN.

PANELBOARD: A (EXISTING)

LOCATION: MECH X117 **SUPPLY FROM:** MSB **MOUNTING:** SURFACE **ENCLOSURE:** NEMA 1

VOLTAGE: 120/208 Wye **PHASE:** 3 **WIRES:** 4

A.I.C. RATING: EXISTING **MAINS TYPE:** MCB **MAINS RATING:** 400 A **MCB RATING:** 400 A

NOTES:

#	BKR	P	LOAD SERVED	WIRE / GROUND / CONDUIT	A		B		C		WIRE / GROUND / CONDUIT	LOAD SERVED	P	BKR	#
1	100	3	PANEL B		0	9281					4#1, #8G., 1 1/2" C	PANEL M	3	100	2 (1)
3	--	--	--	--			0	11800			--	--	--	--	4 (1)
5	--	--	--	--					0	7409	--	--	--	--	6 (1)
7	20	1	LTS & EF (VALVE PIT)	--	0	0					--	SPARE	1	20	8
9	20	1	RECEPTACLE	--			0	0			--	FUEL TANK MONITORING SYSTEM 600	1	20	10
11	20	1	FUEL OIL DAY TANK PUMP	--					0	0	--	FUEL RM - SPECIAL OUTLET	1	20	12
13	20	1	UH-1 & UH-8	--	0	0					--	EF-3	1	20	14
15	20	1	HONEYWELL EMS	--			0	0			--	SPARE	1	20	16
17	20	1	SPARE	--					0	0	--	RECEPTACLE	1	20	18
19	20	1	CONTROL AIR DRYER	--	0	0					--	SPARE	1	20	20
21	20	3	FUEL PUMP RM (FUEL/REFUEL)	--			0	0			--	PUMP 1 LIFT STATION	3	20	22
23	--	--	--	--					0	0	--	--	--	--	24
25	--	--	--	--	0	0					--	--	--	--	26
27	20	3	AFF CONT. AIR COMP	--			0	0			--	UNKNOWN	3	20	28
29	--	--	--	--					0	0	--	--	--	--	30
31	--	--	--	--	0	0					--	--	--	--	32
33	20	3	FLAMMABLE LIQUID STORAGE	--			0	0			--	ENGINE BLOCK HRTS RECEP.	3	20	34
35	--	--	--	--					0	0	--	--	--	--	36
37	--	--	--	--	0	0					--	--	--	--	38
39	20	3	PUMP-2 LIFT STATION	--			0	0			--	EXHAUST FAN OVERHEAD (MECH RM)	3	20	40
41	--	--	--	--					0	0	--	--	--	--	42
43	--	--	--	--	0	0					--	--	--	--	44
45	20	3	PANEL E	--			0	0			--	MAIN	3	20	46
47	--	--	--	--					0	0	--	--	--	--	48
49	--	--	--	--	0	0					--	--	--	--	50
				TOTAL LOAD:	------------		------------		------------						
				TOTAL AMPS:	------------		------------		------------						

PANEL TOTALS	
TOTAL CONNECTED LOAD:	---------------
TOTAL ESTIMATED DEMAND LOAD:	---------------
TOTAL CONNECTED CURRENT:	------------
TOTAL ESTIMATED DEMAND...	------------

DEMAND WITH EXPANSION:	------------

PANELBOARD: D1 (EXISTING)

LOCATION: MECH X117 **SUPPLY FROM:** MSB **MOUNTING:** SURFACE **ENCLOSURE:** NEMA 1

VOLTAGE: 480/277 Wye **PHASE:** 3 **WIRES:** 4

A.I.C. RATING: EXISTING **MAINS TYPE:** MLO **MAINS RATING:** 400 A

NOTES:

#	BKR	P	LOAD SERVED	WIRE / GROUND / CONDUIT	A		B		C		WIRE / GROUND / CONDUIT	LOAD SERVED	P	BKR	#
1	20	1	LIGHTING OFFICE RM 103-106	--	0	0					--	LIGHTING MECH. RM 117	1	20	2
3	20	1	LIGHTING OFFICE 108-112	--			0	0			--	LIGHTING RM 121	1	20	4
5	20	1	LIGHTING OFFICE, MEN, WOMEN	--					0	0	--	LIGHTING RM 121	1	20	6
7	20	1	LIGHTING RM 122	--	0	0					--	LIGHTING RM 121	1	20	8
9	20	1	LIGHTING RM 118	--			0	2116			2#12, #12G, 3/4"C	LIGHTING OFFICE 105	1	20	---
11	20	1	LIGHTING RM 118	--					0	3888	2#12, #12G, 3/4"C	LIGHTING SINGLE MISSILE...	1	20	12 (1)
13	20	1	EMERGENCY POWER SYSTEM	--	0	3888					2#12, #12G, 3/4"C	LIGHTING SINGLE MISSILE...	1	20	14 (1)
15	25	3	HWP-1	--			0	0			--	CWP-1	3	20	16
---	--	--	--	--					0	0	--	--	--	--	---
---	--	--	--	--	0	0					--	--	--	--	---
17	15	3	RF-1	--			0	0				SPARE	3	15	18
---	--	--	--	--					0	0	--	--	--	--	---
---	--	--	--	--	0	0					--	--	--	--	---
(1) 19	20	3	AHU-10 & AHU-11	3#12, #12G., 3/4" C.			4349	0			--	DRYER #1	3	20	20
---	--	--	--	--					4349	0	--	--	--	--	---
---	--	--	--	--	4349	0					--	--	--	--	---
21	15	3	DRYER #2	--			0	2105			3#12, #12G., 3/4" C.	EF-1	3	20	22 (1)
---	--	--	--	--					0	2105	--	--	--	--	---
---	--	--	--	--	0	2105					--	--	--	--	---
23	15	3	AHU-2/RF-2 FUEL RM	--			0	0				SPARE	3	15	24
---	--	--	--	--					0	0	--	--	--	--	---
---	--	--	--	--	0	0					--	--	--	--	---
				TOTAL LOAD:	----------------		--------------		--------------						
				TOTAL AMPS:	------------		------------		------------						

PANEL TOTALS	
TOTAL CONNECTED LOAD:	----------------
TOTAL ESTIMATED DEMAND LOAD:	----------------
TOTAL CONNECTED CURRENT:	------------
TOTAL ESTIMATED DEMAND...	------------

DEMAND WITH EXPANSION:	------------

PANELBOARD: D2 (EXISTING)

LOCATION: MECH X117 **SUPPLY FROM:** MSB **MOUNTING:** SURFACE **ENCLOSURE:** NEMA 1

VOLTAGE: 480/277 Wye **PHASE:** 3 **WIRES:** 4

A.I.C. RATING: EXISTING **MAINS TYPE:** MCB **MAINS RATING:** 400 A

NOTES:

#	BKR	P	LOAD SERVED	WIRE / GROUND / CONDUIT	A		B		C		WIRE / GROUND / CONDUIT	LOAD SERVED	P	BKR	#
25	40	3	JP FUEL PUMP NO. 3 JP-10	--	0	0					--	AHU-1	3	15	26
---	--	--	--	--			0	0			--	--	--	--	---
---	--	--	--	--					0	0	--	--	--	--	---
27	15	3	ACCU-1	--	0	0					--	JP FUEL PUMP NO. 4 JP-10	3	40	28
---	--	--	--	--			0	0			--	--	--	--	---
---	--	--	--	--					0	0	--	--	--	--	---
29	20	3	SPARE	--	0	0					--	SPARE	3	20	30
---	--	--	--	--			0	0			--	--	--	--	---
---	--	--	--	--					0	0	--	--	--	--	---
31	15	3	EF-4	--	0	0					--	CONTROL AIR COMP.	3	20	32
---	--	--	--	--			0	0			--	--	--	--	---
---	--	--	--	--					0	0	--	--	--	--	---
33	25	3	REMOTE DRY COOLER	--	0	2767					3#12, #12G., 3/4" C.	OH DOOR RM 110	3	20	34
---	--	--	--	--			0	2767			--	--	--	--	---
---	--	--	--	--					0	2767	--	--	--	--	---
35	15	3	SF-1	--	0	0					--	SF-2	3	15	36
---	--	--	--	--			0	0			--	--	--	--	---
---	--	--	--	--					0	0	--	--	--	--	---
37	15	3	BOILER	--	0	2105					3#12, #12G., 3/4" C.	EF-2	3	30	38 (1)
---	--	--	--	--			0	2105			--	--	--	--	---
---	--	--	--	--					0	2105	--	--	--	--	---
				TOTAL LOAD:	----------------		--------------		--------------						
				TOTAL AMPS:	------------		------------		------------						

PANEL TOTALS	
TOTAL CONNECTED LOAD:	---------------
TOTAL ESTIMATED DEMAND LOAD:	---------------
TOTAL CONNECTED CURRENT:	------------
TOTAL ESTIMATED DEMAND...	------------

DEMAND WITH EXPANSION:	------------

PANELBOARD: M (NEW)

LOCATION: CORR 101 **SUPPLY FROM:** A **MOUNTING:** RECESSED **ENCLOSURE:** NEMA 1

VOLTAGE: 120/208 Wye **PHASE:** 3 **WIRES:** 4

A.I.C. RATING: 10,000 RMS SYMMETRICAL **MAINS TYPE:** MCB **MAINS RATING:** 100 A **MCB RATING:** 100 A

NOTES: PROVIDE WITH EXTERNAL SURGE PROTECTION DEVICE. PANEL SHALL BE A NON-LINEAR PANELBOARD TYPE

#	BKR	P	LOAD SERVED	WIRE / GROUND / CONDUIT	A		B		C		WIRE / GROUND / CONDUIT	LOAD SERVED	P	BKR	#
1	20	1	RECEPT OFFICE 1 105	2#12, #12G, 3/4"C	1080	1080					2#12, #12G, 3/4"C	RECEPT COMM 103, LOW BAY NCOIC 104	1	20	2
3	20	1	RECEPT BREAK ROOM 102	2#12, #12G, 3/4"C			1080	720			2#12, #12G, 3/4"C	RECEPT BREAK RM 102	1	20	4
5	20	1	REFRIGERATOR BREAK RM 102	2#12, #12G, 3/4"C					1080	1080	2#12, #12G, 3/4"C	REFRIGERATOR BREAK RM 102	1	20	6
7	20	1	REFRIGERATOR BREAK RM 102	2#12, #12G, 3/4"C	1080	720					2#12, #12G, 3/4"C	EXTERIOR WP GFI RECEPTS	1	20	8
9	20	1	RECEPT CORR 101	2#12, #12G, 3/4"C			900	720			2#12, #12G, 3/4"C	RECEPT HIGH BAY NCOIC 107	1	20	10
11	20	1	RECEPT VACE OFFICE 108	2#12, #12G, 3/4"C					900	720	2#12, #12G, 3/4"C	RECEPT SINGLE MISSILE...	1	20	12
13	20	2	ACCU-1 / CRU-1	2#12, #12G, 3/4"C	752	750					2#12, #12G, 3/4"C	RECEPTACLE SINGLE MISSILE...	2	20	14
15	--	--	--	--			752	750			--	--	--	--	16
17	20	2	ACCU-2 & CRU-2	2#12, #12G, 3/4"C					392	750	2#12, #12G, 3/4"C	RECEPTACLE SINGLE MISSILE...	2	20	18
19	--	--	--	--	392	750					--	--	--	--	20
21	20	1	RECEPT VACE VAULT 108				720	1080			2#12, #12G, 3/4"C	DEDICATED RECEPT COMM 103	1	20	22
23	20	1	LIGHTING BREAK RM 102	2#12, #12G, 3/4"C					60	0		SPARE	1	20	24
25	20	1	RECEPT SINGLE MISSILE...	2#12, #12G, 3/4"C	180	1440					2#12, #12G, 3/4"C	EWH-1 BREAK RM 102	1	20	26
27	20	1	MICROWAVE BREAK RM 102	2#12, #12G, 3/4"C			1500	3000			2#12, #12G, 3/4"C	RECEPT BREAK RM 102	1	20	28
29	20	1	DEDICATED RECEPT COMM 103	2#12, #12G, 3/4"C					1080	840	2#12, #12G, 3/4"C	RECEPTACLES NORTH WALL RM 110	1	20	30
31	20	1	RECEPT SINGLE MISSILE...	2#12, #12G, 3/4"C	540	720					2#12, #12G, 3/4"C	AHU-10, AHU-11 CONTROL PANELS	1	20	32
33	20	1	SPARE				0	720			2#12, #12G, 3/4"C	DRENCH ALARM MISSILE MAINT 110	1	20	34
35	20	1	SPARE						0	696	2#12, #12G, 3/4"C	RF-10 BREAK RM 102	1	20	36
37	20	1	SPARE		0	0					--	SPACE	--	--	38
39	20	1	SPARE				0	0			--	SPACE	--	--	40
41	20	1	SPARE						0	0	--	SPACE	--	--	42
				TOTAL LOAD:	9484 VA		11942 VA		7598 VA						
				TOTAL AMPS:	81 A		102 A		63 A						

PANEL TOTALS	
TOTAL CONNECTED LOAD:	29024 VA
TOTAL ESTIMATED DEMAND LOAD:	23167 VA
TOTAL CONNECTED CURRENT:	81 A
TOTAL ESTIMATED DEMAND...	64 A
DEMAND WITH EXPANSION:	77 A

US ARMY CORPS OF ENGINEERS
OMAHA DISTRICT

SYM.	DATE	DESCRIPTION	APPR.	SYM.	DATE	DESCRIPTION	APPR.

DESIGNED BY: K.WATSON	DATE: APRIL 2016
DWN BY: E.KREINER	CKD BY: M. MACOUBRIE
SOLICITATION NO.: W9128F-16-B-0007	
SUBMITTED BY: -	CONTRACT NO.: -
FILE NAME: MIA8E-702	FILE NUMBER: AF212-220
SIZE: 34X22	PLOT SCALE: AS INDICATED
PLOT DATE: 4/22/16	

U.S. ARMY ENGINEER DISTRICT
CORPS OF ENGINEERS
OMAHA, NEBRASKA

BURNS & McDONNELL
8201 NORMAN CENTER DR. #300
BLOOMINGTON, MN 55437
952-656-6003

FY15 P-341 CONSTRUCT ADDITION B1134
MINOT AFB, NORTH DAKOTA
PN: QJVF143101

ELECTRICAL PANELBOARD SCHEDULES

SHEET IDENTIFICATION NUMBER

E-702

4/25/2016 4:18:37 AM

COPYRIGHT © 2016 BURNS & McDONNELL ENGINEERING COMPANY, INC.