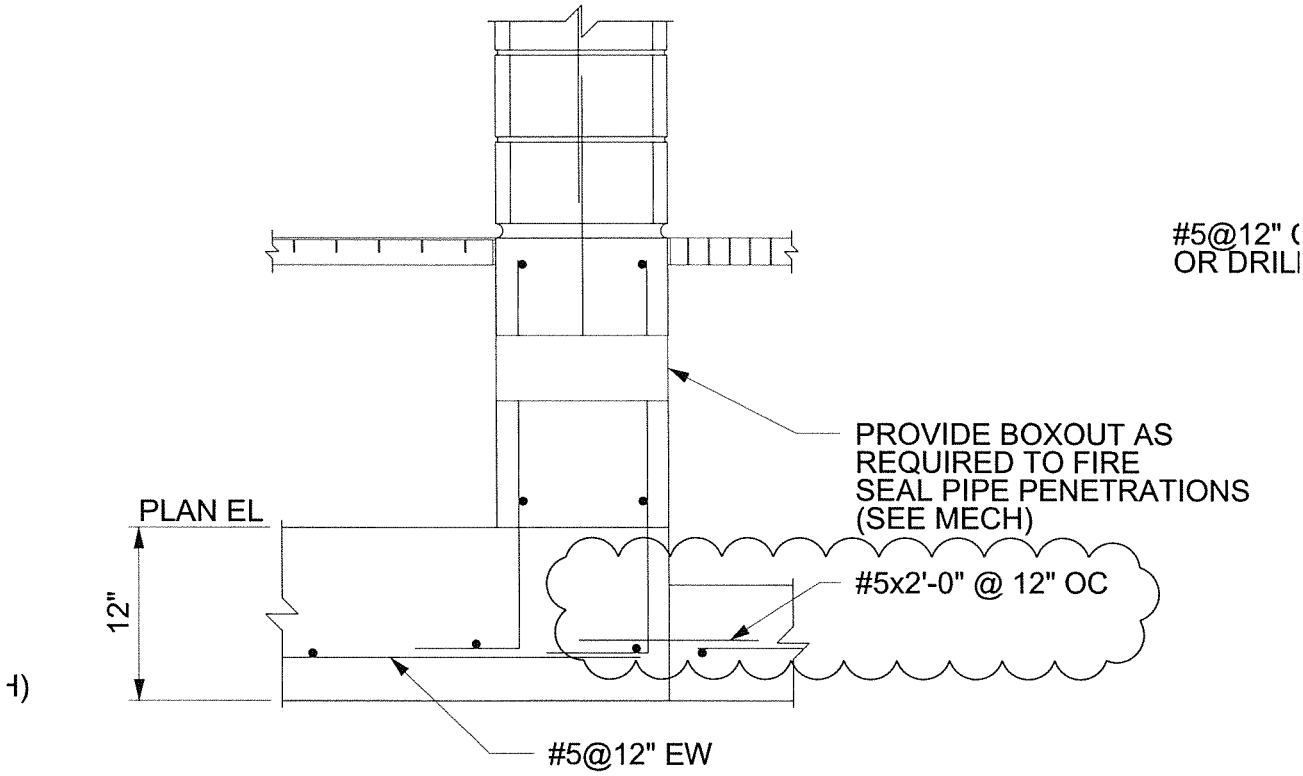

B SECTION

S2-101 S2-504 SCALE: 1" = 1'-0"

S2-102

S2-504