Statement of Work (SOW)

Naval Center for Space Technology

CODE 8212 – PROCESSING & TEST SECTION
Thermal Vacuum Control System Upgrade

05/14/2014

Version 1.5

1 Introduction 1

2 Applicable Documents 2

3 Requirements 3

Appendix C List of Acronyms 12

Figure 1 – Project Area on NRL Building A-59 First Floor 14

Figure 2 – TVAC Chamber System Diagram (current) 15

Figure 3 – Control System Block Diagram (current) 16

Attached

Appendix A TVAC I/O List

Appendix B TVAC Control System Wiring Diagram

Statement of Work (SOW)

Naval Center for Space Technology

1 Introduction

This Statement of Work (SOW) describes the requirements applicable to the upgrade of three control systems for three large thermal vacuum (TVAC) chambers in the U.S. Naval Research Laboratory (NRL) Code 8212.

1.1 Mission

The US Naval Research Laboratory's Naval Center for Space Technology – NCST (Code 800) is comprised of two Departments, the Spacecraft Engineering Department – SED (Code 8200) and the Space Systems Development Department - SSDD (Code 8100). NCST is the focal point for the Navy's in-house spacecraft bus capability, and functions as "Program Manager" for Navy space programs. Activities range from concept and feasibility studies through the on-orbit operation of Navy space systems. As Program Manager for spacecraft and space experiments, the NCST performs system engineering, and provides technical direction for Navy space programs, while maintaining an active in-house satellite development capability. The NCST functions as a prototype laboratory, and ensures that designs are transferable to industry for incorporation into subsequent satellite hardware builds. The NCST also supports the Navy Program Office by providing expert technical consultation on architectural, acquisition, and operational issues.

1.2 Background

The Test & Processing Section (Code 8212) conducts thermal vacuum testing for satellites and spacecraft components in the Payload Checkout Facility (PCF). The section operates three large thermal vacuum chambers which can simulate both the vacuum and thermal environments of space that satellites and spacecraft encounter during spaceflight. Each chamber has a standalone, non-redundant, programmable logic controller (PLC)-based control system.

The largest chamber, known as "Big Blue", has a horizontal cylindrical working envelop of 16' diameter x 30' long. The chamber is pumped by three CVI TM900 cryopumps. Roughing is by two blowers and a Stokes dry pump. This chamber has a thermal shroud that is divided into five zones, each zone having its own temperature control unit (TCU). The existing control system includes two General Electric (GE) PLCs.

The smaller ‘North” and “South” chambers measure 7’ diameter x 8’ tall. The North Chamber has a Leybold RPK 60000 cryopump and is roughed with a Stokes CD250 and Stokes blower. The South Chamber has a NRC diffusion pump and is roughed with Stokes Microvac roughing pumps. The North Chamber has a single zone shroud and one TCU. The South chamber has a single zone shroud and utilizes Big Blue’s Zone One TCU. The existing North control system includes one GE PLC for pump control and one Procidia PLC for shroud control. The existing South control system includes one GE PLC for pump control and uses the Big Blue TCU PLC for shroud control.

1.3 Scope

The objective of this project is to make upgrades to the system controllers, human machine interface (HMI), and select devices while reusing as much of the existing systems as practical. The Contractor will evaluate the existing TVAC control systems, and then design, develop, install, integrate, and test hardware and software upgrades.

All applicable TVAC equipment is located in the NRL Building A-59 North High Bay TVAC Area and adjacent TVAC Mechanical Room (see Figure 1). The current TVAC chamber system (see Figure 2) and control system (see Figure 3) will be upgraded in accordance with these requirements.

2 Applicable Documents

2.1 Department of Defense Standards

- MIL-STD-100G, DoD Standard Practice for Engineering Drawings

2.2 Non-government standards and other publications

- RFC 791 and 793, Transmission Control/Internet Protocol (TCP/IP)
- NFPA 70, National Electric Code
- UL 508, AMSE Engineering Drawing Practices

3 Requirements

3.1 The Contractor shall design and develop hardware upgrades for the TVAC control systems.

3.1.1 The Contractor shall replace the existing PLC hardware in the 3 TVAC control systems, a total of 4 GE PLCs and 1 Procidia PLC, with newest generation Allen-Bradley 1756 ControlLogics industrial Programmable Automation Controllers (PACs) with built in USB port.

3.1.1.1 Each PAC control system shall operate independently of one another.

3.1.1.2 Each PAC control system shall have a minimum of 1 spare module slot for future expansion.

3.1.1.3 Each PAC control system shall have a minimum of 10% spare input/output (I/O) capacity for each I/O type installed in that PAC for future expansion.

3.1.1.4 The hardware design shall allow the removal of modules without the removal of field signal wiring.

3.1.1.5 Each PAC control system shall include an uninterruptable power supply (UPS) capable of a minimum 30 minutes of computer run time in the event of a power outage.

3.1.1.6 The hardware design shall utilize the existing cabinet and auxiliary equipment to the greatest extent practical.

3.1.1.7 The hardware design shall incorporate all I/O in the TVAC I/O list (See Appendix A), as well as any additional I/O per Contractor's design.

The TVAC I/O list includes currently configured I/O, as well as the minimum additional I/O to support the upgrades of section 3.1.3. The current control system wiring diagram (see Appendix B) is provided for informational purposes.

3.1.2 The Contractor shall replace the 3 existing operator workstations with 3 newest generation operator workstations.

“Operator workstation” is a combination of PC hardware and HMI software. It does not include furniture, which is available at NRL.

3.1.2.1 Each operator workstation shall include a Dell desktop personal computer (PC) with mouse, keyboard, HDMI video, and gigabit ethernet.

3.1.2.2 Each operator workstation shall run the newest version of Microsoft Windows, or a version agreed to by NRL.

3.1.2.3 Each operator workstation shall include 2 touchscreen monitors of minimum 24 inch diagonal viewable area.

3.1.2.4 Each operator workstation shall include an uninterruptable power supply (UPS) capable of a minimum 30 minutes of run time in the event of a power outage.

3.1.3 The Contractor shall upgrade select components of the controlled system.

3.1.3.1 The Contractor shall replace 2 variable frequency drives (VFDs), installed to drive the original 50 hp electric motors, with VFDs designed to match the current 10 hp motors and control motor speed according to pressure.

3.1.3.2 The Contractor shall replace 12 non-monitored valves in the system with new VAT Vakuumventile AG manufactured stainless steel, bellows sealed, pneumatically operated valves with both open and closed position-sensors (see Table 1). The contractor shall helium leak test any modifications to the vacuum system with a calibrated helium leak detector to a rate not greater than 1.0 x 10-9 atm-cc/sec.

Table 1 – TVAC System Valves for Replacement

Valves (without position indicators) to upgrade	
Valve Name	Valve Size
Big Blue Chamber	
Blower Isolation Valve 1	8"
Blower Isolation Valve 2	8"
Big Blue to North chamber	6"
North Chamber	
Roughing Isolation Valve	6"
Chamber Roughing Valve	6"
Cryo Pump Roughing Valve	6"
South Chamber	
Roughing Pump Isolation Valve 1	6"
Roughing Pump Isolation Valve 2	6"
Chamber Roughing Valve	6"
Foreline Valve	6"
Holding Pump Isolation Valve	3"
Holding Pump Valve	1.5"

3.2 The Contractor shall design, develop, install and test software upgrades for the TVAC control systems.

3.2.1 The combination of PAC and HMI software shall provide a turnkey software system capable of controlling all chamber and thermal control unit functions.

3.2.2 The Contractor shall use Allen-Bradley/Rockwell Automation software and/or National Instruments LabVIEW software to program the PAC and HMI.

The current software will be made available to the Contractor for reuse or copy. It is anticipated that little original functionality will need to be programmed.

3.2.3 PAC control software shall be comprised of ladder logic, with limited usage of high level software language as approved at Critical Design Review (CDR).

3.2.4 Each operator workstation shall be capable of operating any one of the three chambers.

3.2.5 HMI displays and functions shall include, at a minimum, all displays and functions contained in the current HMI.

3.2.6 All HMI operations shall support user interface via both mouse/keyboard and touch screen.

3.2.7 All control logic, tuning parameters, and user settings shall be saved in non-volatile memory.

3.2.8 The software design shall utilize all monitoring and control signals in the TVAC I/O list (See Appendix A).

For example, some valves currently have two sensors (open and closed) physically wired to the control system, but the software design monitors one. In this example, the updated software must utilize both sensors.

3.2.9 All error messages shall be displayed in plain English with enough information that the operator can determine the cause of the alarm.

3.3 The Contractor shall deliver, install and integrate TVAC control system upgrades.

3.3.1 The Contractor shall disconnect and uninstall all components to be replaced.

3.3.2 The Contractor shall return all original equipment removed from the system to NRL.

3.3.3 The Contractor shall install all new hardware and software.

3.3.4 The Contractor shall reconnect all field signal wiring, and ensure each is properly labeled.

3.3.5 The Contractor shall supply all ancillary cables, connectors, and mounting hardware necessary to provide a turnkey hardware solution.

3.3.6 The Contractor shall set default or recommended values for all user adjustable settings.

3.3.7 The Contractor shall establish end to end communications from each TVAC device to HMI.

3.3.8 The Contractor shall tune all Proportional Integral Derivative (PID) control loops.

3.3.9 The Contractor shall supply one spare PAC computer and one spare module of each type used.

3.3.10 The Contractor shall provide an as-wired diagram for each PAC control system, to include interfaces to all TVAC devices connected to or run by the PAC. [CDRL A0004]

3.3.11 The Contractor shall provide an updated signal list which reflects any additional signals and changes to wire termination points as a result of updates. [CDRL A0005]

3.3.12 The Contractor shall provide a licensed copy of the PAC programming software, PID programming software, and HMI programming software.

3.3.13 The Contractor shall provide licenses for each instance of PAC and HMI runtime software, as applicable.

3.3.14 The Contractor shall provide fully documented software source code. [CDRL A0006, A0007]

3.4 The Contractor shall perform Inspection and Test of the TVAC control systems.

3.4.1 The Contractor shall perform factory test of control software in a simulation environment prior to installation at NRL.

3.4.1.1 Factory test shall verify each element of control logic.

3.4.1.2 Factory test shall verify the full range of each data item displayed on the HMI.

3.4.1.3 Factory test shall verify all alarm set points and indications.

3.4.2 The Contractor shall perform, after installation and before initial system startup, inspection of all work products to ensure compliance with the standards of section 2.

3.4.3 The Contractor shall conduct an acceptance test upon completion of installation and inspection.

3.4.3.1 The Contractor shall submit an acceptance test plan to be approved by NRL prior to delivery of the equipment at the final design review. [CDRL A0002]

3.4.3.2 The Contractor shall certify that all requirements are met by the delivered system through the test procedure.

3.4.3.3 The Contractor shall run the acceptance test at the Naval Research Lab with NRL personnel on hand to run the chamber, witness the test and verify operation of the system.

3.4.3.4 The Contractor shall execute all command and functions available on the HMI

3.4.3.5 The Contractor shall verify the values of inputs displayed on the HMI, to the extent allowed by safe operation of TVAC equipment.

3.4.3.6 The Contractor shall verify all logic and sequences function as designed, to the extent allowed by safe operation of TVAC equipment.

3.4.3.7 The Contractor shall submit an acceptance test report. [CDRL A0003]

3.4.3.8 The Contractor shall support an operational test of the complete TVAC chamber system to be run by the government.

Unlike the acceptance test which will largely test control system components individually, the operational test will involve operating

the TVAC chambers in a variety of modes which will simulate real world scenarios. For planning purposes, the support of one Contractor representative for two weeks will be needed.

3.5 The Contractor shall provide post-delivery support and warranty.

3.5.1 The Contractor shall provide 30 days of onsite programming support after, and within 3 years of, system commissioning.

NRL will provide a minimum of two weeks advance notice that support is needed. The support will be provided at a time agreed to by NRL and the Contractor. The minimum duration of each onsite support visit will be 5 days.

3.5.2 The Contractor shall provide a single source warranty for all supplied hardware and software to be free of defects in material and workmanship for a period of one (1) year from the date of Government acceptance.

3.6 Design Reviews & Project Schedule

3.6.1 Concept Design Review (CoDR) [CDRL A0001]

The CoDR affirms the project requirements and examines the proposed concept for meeting those requirements.

Successful completion of the CoDR is required in order to proceed into Phase I – Preliminary Design

3.6.2 Preliminary Design Review (PDR) [CDRL A0001]

The PDR demonstrates that the preliminary design meets all project requirements with acceptable risk and within the cost and schedule constraints and establishes the basis for proceeding with detailed design. It will show that the correct design options have been selected, interfaces have been identified, and verification methods have been described.

The following are pass/fail criteria of the PDR:

Certify that all system requirements have been allocated, the requirements are complete, and the flow down is adequate to verify system performance.

Demonstrate that the proposed design is expected to meet the functional and performance requirements.

Demonstrate sufficient maturity in the proposed design approach to proceed to final design.

Demonstrate that the design is verifiable and that the risks have been identified, characterized, and mitigated where appropriate.

Successful completion of the PDR is required for proceeding into Phase II – Final Design.

3.6.3 Critical Design Review (CDR) [CDRL A0001]

The CDR demonstrates that the maturity of the design is appropriate to support proceeding with formal release to manufacturing for fabrication, assembly, installation, and test. CDR determines that the technical effort is on track to complete the project specifications and performance requirements within the identified cost and schedule constraints.

The following are pass/fail criteria of the CDR:

Certify that the "build-to" baseline contains detailed hardware and software specifications that can meet functional and performance requirements.

Certify that the design has been satisfactorily audited by production, verification, operations, and other specialty engineering organizations.

Certify that the production processes and controls are sufficient to proceed to the fabrication stage.

Certify that planned Quality Assurance (QA) activities will establish perceptive verification and screening processes for producing a quality product.

Verify that the final design fulfills the specifications established at PDR.

Government approves HMI screen designs.

Successful completion of the CDR is required for proceeding into Phase III – Development.

3.6.4 Project Schedule [CDRL A0008]

The contractor shall produce and maintain a project schedule. The schedule shall at a minimum, detail the projects major milestones, key tasks/activities, critical path, and contain in sufficient detail the networked tasks and associated progress necessary to ensure successful program execution.

The schedule will be used to verify attainability of project objectives, to evaluate progress toward meeting objectives, and to integrate the activities with all related components.

Appendix C List of Acronyms

ASME	American Society of Mechanical Engineers
atm	Atmosphere
ATP	Acceptance Test Plan
CAD	Computer Aided Design
cc	Cubic Centimeter(s)
CoDR	Concept Design Review
CDR	Critical Design Review
COR	Contracting Officer Representative
GE	General Electric Company
GN_2	Gaseous Nitrogen
HMI	Human Machine Interface
I/O	Input/Output
hp	Horsepower
KO	Contracting Officer
LN_2	Liquid Nitrogen
MIL-STD	Military Standard
NAC	National Agency Check
NCST	Naval Center for Space Technology
NRL	Naval Research Laboratory
OCI	Organizational Conflict of Interest
PAC	Programmable Automation Controller
PCF	Payload Checkout Facility
PDR	Preliminary Design Review
PLC	Programmable Logic Controller

PCO	Procuring Contracting Officer
RTD	Resistive Temperature Device
sec	Second(s)
SOW	Statement of Work
STEP	Standard for the Exchange of Product model data
SVD	Software Version Description
TCP/IP	Transmission Control Protocol / Internet Protocol
TCU	Thermal Conditioning Unit
TVAC	Thermal Vacuum
QA	Quality Assurance

Figure 1 – Project Area on NRL Building A-59 First Floor

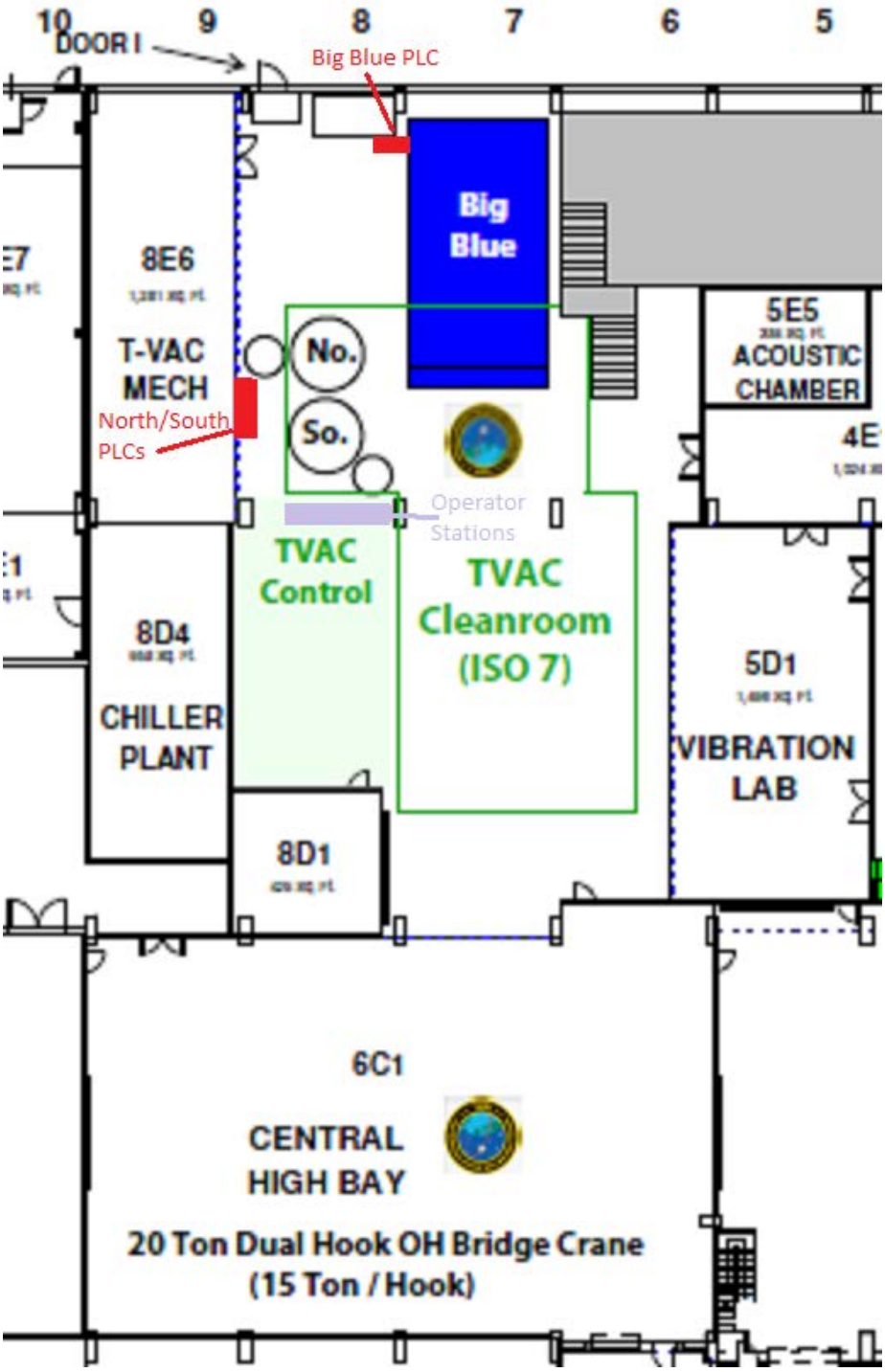

Figure 2 – TVAC Chamber System Diagram (current)

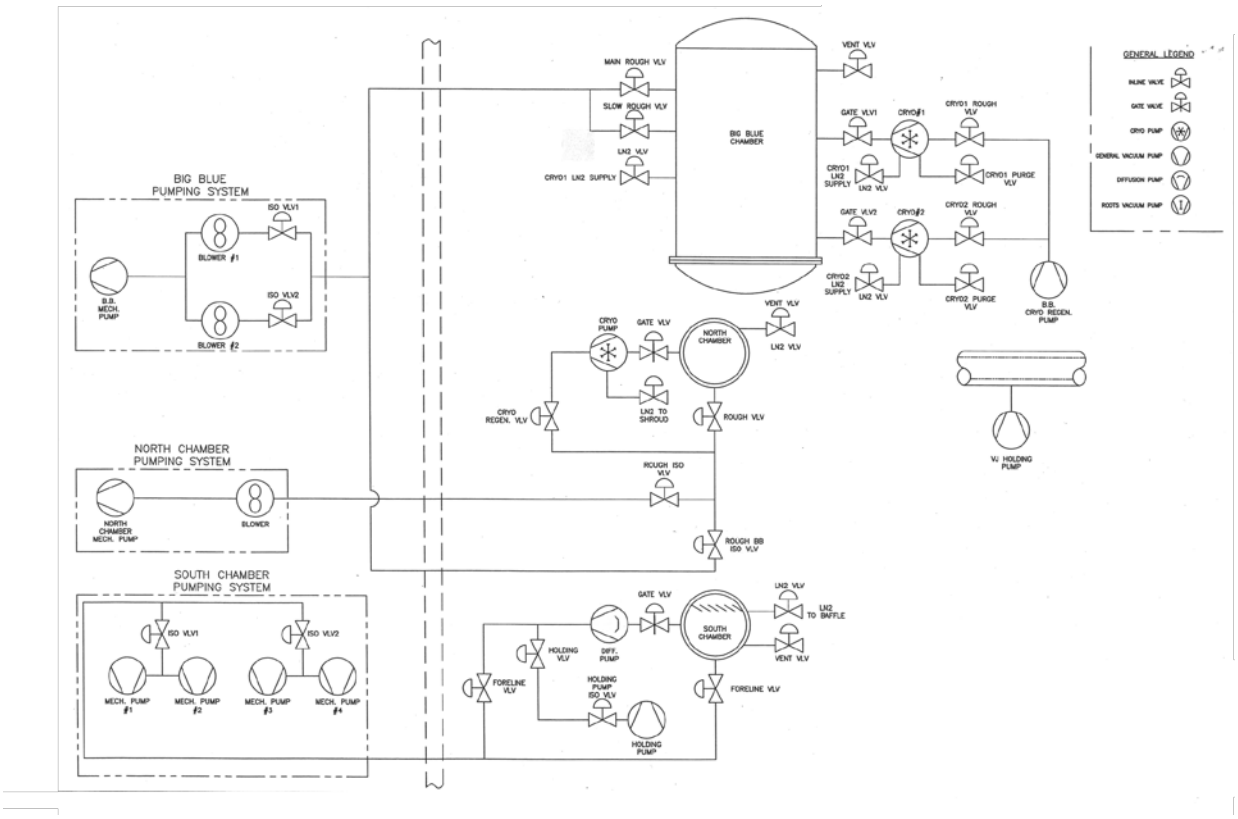
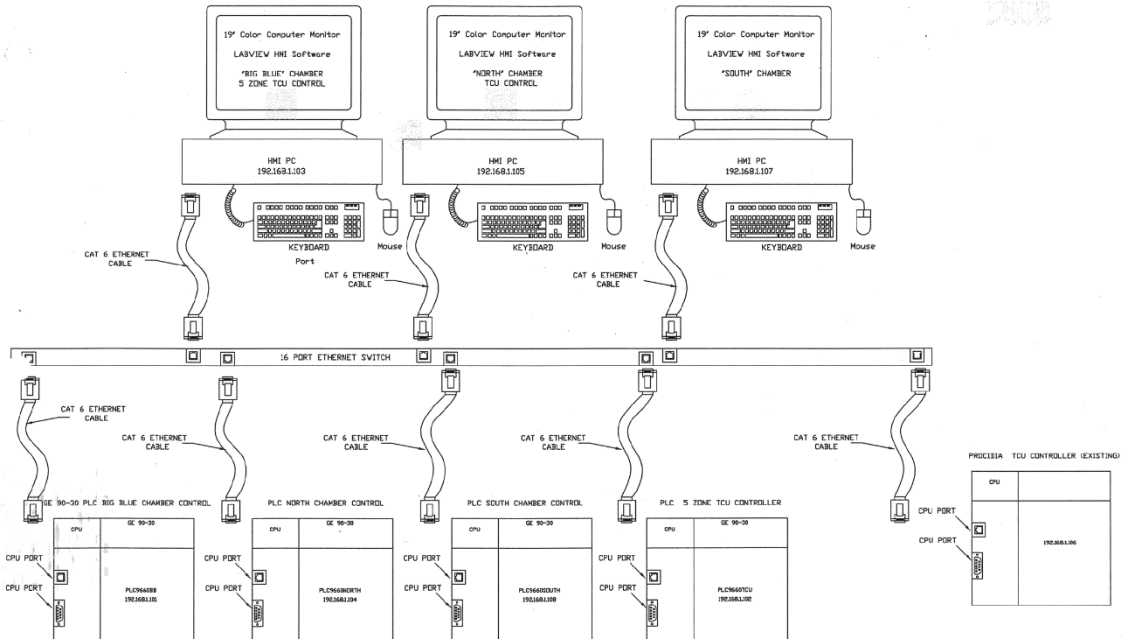
Figure 3 – Control System Block Diagram (current)