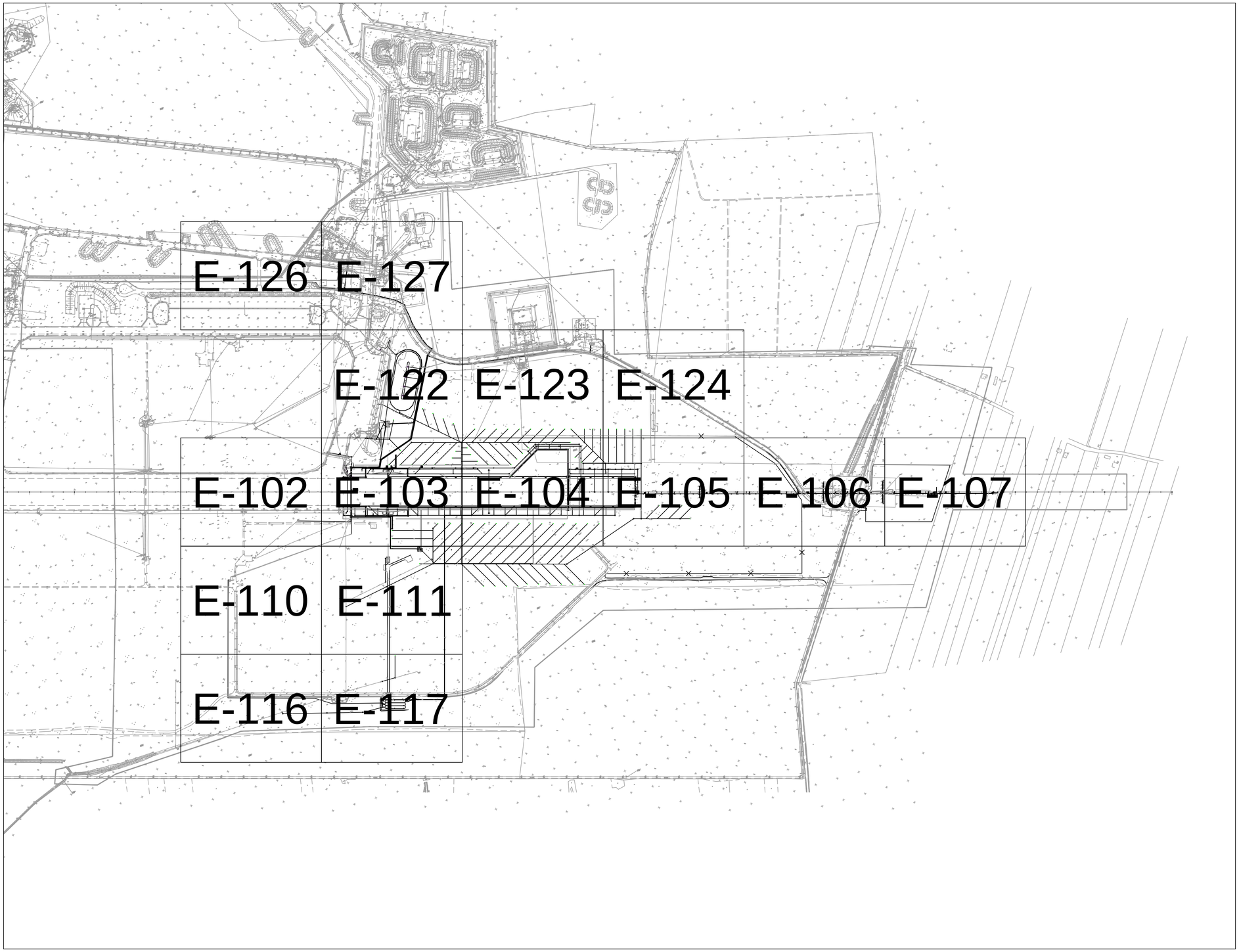

US Army Corps of Engineers®

MARK	DESCRIPTION	DATE

DESIGNED BY: K. LORENZ
DRAWN BY: M. STASIEWICZ
CHECKED BY: K. LEPERA
SUBMITTED BY: D. DIEHL
SIZE: ANSI D
ISSUE DATE: MARCH 2017
SOLICITATION NO.:
PROJECT NO.: PAY215002A

U.S. ARMY CORPS OF ENGINEERS
KONRAD ADENAUER RING 39
WIESBADEN, D-65187 / GERMANY

AECOM INTERNATIONAL, INC.
SIEMENSSTRAGE 10
NEU-ISENBURG, 63263

ERI: IMPROVE SUPPORT INFRASTRUCTURE
LASK AB, POLAND

ELECTRICAL LIGHTING PLAN - SHEET ARRANGEMENT
PLAN SYTUACYJNY - OŚWIETLENIE - R. ARKUSZY

SHEET ID
E-100

C:\PWWORKING\AECOM_EU\LLAWICKA\D0159839\15-D-0008-0003EE-103.DWG
5/12/2016 LUCYNA.LAWICKA NOT TO SCALE
100%

ABBREVIATIONS:

ADJ	ADJACENT, ADJOINING, ADJUSTABLE
AMP	AMPERE
ANSI	AMERICAN NATIONAL STANDARDS INSTITUTE
APPROX	APPROXIMATE
AVG	AVERAGE
AWG	AMERICAN WIRE GAUGE
BLW	BELOW
BTWN	BETWEEN
CAP	CAPACITY
CERT	CERTIFIED
CHFR	CHAMFER
CHK	CHECK
CKT	CIRCUIT
CKTS	CIRCUITS
CL	CENTER LINE
CLR	CLEAR
COMM	COMMUNICATION
CONN	CONNECT
CTR	CENTER
DEG	DEGREE
DEMO	DEMOLISH, DEMOLITION
DET	DETAIL
DIA	DIAMETER
DIM	DIMENSION
DIR	DIRECTION(AL)
DIST	DISTRIBUTION
DWG	DRAWING
E	EAST
EA	EACH
ELEC	ELECTRICAL
ELEV	ELEVATION
EMERG	EMERGENCY
EMH	ELECTRIC MANHOLE
EQ	EQUAL
EQUIP	EQUIPMENT
EST	ESTIMATE(D)
EW	EACH WAY
EX	EXISTING
FFM	FAR FIELD MONITOR
FLEX	FLEXIBLE
FT	FEET
GALV	GALVANIZED
GEN	GENERAL
GND	GROUND
GOVT	GOVERNMENT
GS	GLIDE SLOPE
GVL	GRAVEL
HDPE	HIGH-DENSITY POLYETHYLENE
HORIZ	HORIZONTAL
HZ	HERTZ
INCL	INCLUDE(ED)(ING)
INV	INVERT
IRDM	ILLUMINATED RUNWAY DISTANCE MARKERS
J-BOX	JUNCTION BOX
JCT	JUNCTION
KV	KILOVOLTS
KVA	KILOVOLT AMPERES
KVAR	KILOVOLT AMPERES REACTIVE
KW	KILOWATT
L	LENGTH
MAX	MAXIMUM
MH	MANHOLE
MIN	MINIMUM
MISC	MISCELLANEOUS
MM	MIDDLE MARKER
MPa	MEGAPASCALS
N	NORTH
NDB	NON DIRECTIONAL BEACON
NFM	NEAR FIELD MONITOR
NIC	NOT IN CONTRACT
NO	NUMBER
NTS	NOT TO SCALE
OC	ON CENTER
OD	OUTSIDE DIAMETER
OFF	OFFSET
ORIG	ORIGINAL
OVRN	OVERRUN
PVC	POLYVINYL CHLORIDE
R	RADIUS
REQD	REQUIRED
RRP	RECOMMENDED RETAIL PRICE
RWY	RUNWAY
S	SOUTH
SCHED	SCHEDULE
SHT	SHEET
SPEC	SPECIFICATIONS
SQ	SQUARE
STA	STATION
STD	STANDARD
STL	STEEL
TWY	TAXIWAY
THRE	THRESHOLD
TYP	TYPICAL
UON	UNLESS OTHERWISE NOTED
UTIL	UTILITY
V	VOLT
VAR	VARIABLE, VARIES
VIF	VERIFY IN FIELD
VERT	VERTICAL
W	WEST
W/	WITH
W/O	WITHOUT
WT	WEIGHT

ELECTRICAL CIRCUITS:

CIRCUIT NUMBER	CIRCUIT DESCRIPTION
1	RUNWAY 28 CALVERT SYSTEM
2	RUNWAY 28 CALVERT SYSTEM
3	RUNWAY 28 THRESHOLD LIGHTS
4	RUNWAY 28 THRESHOLD LIGHTS
5	RUNWAY 28 EDGE&END LIGHTS
6	RUNWAY 28 EDGE&END LIGHTS
21	TAXIWAY EDGE LIGHTS
22	TAXIWAY EDGE LIGHTS
AF	APRON FLOODLIGHTING
PCKT 1	NAVAID (POWER SUPPLY)
PCKT 2	FAR FIELD MONITOR (POWER SUPPLY)
PCKT 3	CEILOMETER (POWER SUPPLY)
PCKT 4	NAVAID (POWER SUPPLY)
PCKT 5	NDB SHELTER (POWER SUPPLY)
PCKT 6	MIDDLE MARKER (POWER SUPPLY)
PCKT 7	AWOS (POWER SUPPLY)
PCKT 8	AWOS (POWER SUPPLY)
PCKT 9	BAK SYSTEM (POWER SUPPLY)
PCKT 10	ZK1 (POWER SUPPLY)
PCKT 11	ZK2 (POWER SUPPLY)

TELECOMMUNICATION CIRCUITS:

CIRCUIT NUMBER	CIRCUIT DESCRIPTION
TCKT 1	SK-B4 - BAK SYSTEM
TCKT 2	SK-B4 - AWOS
TCKT 3	SK-B4 - T-25
TCKT 4	T-25 - FFM
TCKT 5	T-25 - CEILOMETER
TCKT 6	T-25 - T-27
TCKT 7	T-27 - NDB
TCKT 8	T-27 - MM

GENERAL NOTES:

1. IN THE PRESENCE OF THE CONTRACTING OFFICER, PERFORM A SURVEY OF EXISTING EDGE LIGHTS, THRESHOLD LIGHTS AND RUNWAY DISTANCE REMAINING SIGNS TO DETERMINE AND LOG THE LOCATION OF ANY NON-FUNCTIONAL OR DAMAGED UNITS PRIOR TO REMOVAL OR ALTERATION. ANY DAMAGE OR LOSS OF FUNCTION SHOWN TO HAVE OCCURRED DURING CONSTRUCTION SHALL BE PROMPTLY REPAIRED BY THE CONTRACTOR AT NO EXPENSE TO THE GOVERNMENT.
2. BEFORE PERFORMING ANY WORK TO THE AIRFIELD LIGHTING CIRCUITS, COORDINATE WITH THE BASE ELECTRICAL TO LOCK-OUT/TAG-OUT ALL CIRCUITS AT THE AIRFIELD LIGHTING VAULT. PERFORM LOCK-OUT/TAG-OUT PROCEDURES IN ACCORDANCE WITH THE BASE REQUIREMENTS.
3. THE CONTRACTOR SHALL COORDINATE WITH BASE PERSONNEL TO LOCATE EXISTING UNDERGROUND UTILITIES. THE CONTRACTOR IS RESPONSIBLE FOR ALL STAKE OUT OF UTILITIES.
4. BEFORE AND AT THE END OF CONSTRUCTION, MEGGER® ALL CIRCUITS AFFECTED BY THIS PROJECT AND PROVIDE THE OHM RESISTANCE RESULTS TO THE CONTRACTING OFFICER. ANY READINGS TAKEN AT THE END OF CONSTRUCTION THAT ARE BELOW THE INITIAL READINGS WILL REQUIRE THE CONTRACTOR TO LOCATE AND IDENTIFY THE FAULT(S), AND MUST BE REPAIRED BY THE CONTRACTOR AT NO EXPENSE TO THE GOVERNMENT.
5. THE LOCATIONS OF UNDERGROUND UTILITIES AND FACILITIES SHOWN ON THE PLANS HAVE BEEN OBTAINED FROM AVAILABLE RECORDS AND ARE BELIEVED TO BE CORRECT. NO GUARANTEE IS MADE AS TO THEIR ACCURACY OR COMPLETENESS. THE CONTRACTOR SHALL LOCATE AND IDENTIFY ALL UNDERGROUND UTILITIES IN THE WORK AREA PRIOR TO CONSTRUCTION. ANY UNDERGROUND UTILITIES LOCATED WHICH DO NOT APPEAR ON THE PLANS SHALL BE BROUGHT TO THE ATTENTION OF THE CONTRACTING OFFICER REPRESENTATIVE AND AIRFIELD OPERATIONS. ANY DAMAGE TO UTILITIES CAUSED BY THE CONTRACTOR SHALL BE PROMPTLY REPAIRED AT THE CONTRACTORS EXPENSE.
6. NOT ALL FIXTURES ARE DRAWN ON THEIR EXACT LOCATION - DO NOT SCALE OFF DRAWING WHILE DETERMINING STATION OR OFFSET.
7. IF NOT STATED OTHERWISE CONTRACTOR MAY USE INT'L EQUIVALENT FOR AWG CABLE SIZES ACCORDING TO PROPER TABLE ON SHEET E-128.

SECURITY:

1. THE CONTRACTOR SHALL ENSURE COMPLIANCE WITH ALL SECURITY REGULATIONS AND ACCESS REQUIREMENTS FOR ALL CONTRACTOR PERSONNEL ENTERING THE PROJECT SITE. CONTRACTOR SHALL BE RESPONSIBLE FOR ALL BADGING AND TRAINING REQUIRED FOR BASE AND AIRFIELD ACCESS.
2. CLOSE COORDINATION WITH BASE, AIRFIELD OPERATIONS, AND SECURITY OPERATIONS IS A REQUIREMENT OF THE CONTRACT.
3. CONTRACTOR VEHICLES SHALL ABIDE BY BASE TRAFFIC REGULATIONS INCLUDING SPEED LIMITS AND RESTRICTIONS ON CELL PHONE USAGE. COMMERCIAL VEHICLES AND HEAVY EQUIPMENT MUST TRAVEL ALONG PREDETERMINED HAUL ROUTES AND PASS THROUGH SECURITY ACCESS POINTS AS SHOWN ON THE DRAWINGS.
4. ACCESS TO AREAS IN CLOSE PROXIMITY TO THE AIRFIELD SHALL BE STRICTLY CONTROLLED AT ALL TIMES. TEMPORARY AIRFIELD ACCESS POINTS ARE SUBJECT TO ADJUSTMENT ACCORDING TO THE STAGES OF CONSTRUCTION AS SHOWN ON THE PHASING PLAN. ALL CONTRACTOR PERSONNEL SHALL REMAIN INFORMED OF ACTIVE AND CLOSED AIRFIELD ACCESS POINTS.
5. ALL AIRFIELD SECURITY RULES AND REGULATIONS SHALL APPLY EQUALLY TO THE CONTRACTOR AND ITS SUBCONTRACTORS EMPLOYED ON THE PROJECT.
6. ALL CONTRACTOR PERSONNEL SHALL BE BRIEFED ON FOD, APPROVED HAUL ROUTES, RESTRICTED AREAS, AND RED SECURITY LINE.
7. CONTRACTOR VEHICLES PERMITTED TO TRAVEL WITHIN THE AIRFIELD MUST PROPERLY DISPLAY APPROVED I.D. PLACARDS.
8. VISITORS TO THE PROJECT SITE MUST BE ACCOMPANIED BY AN APPROVED SPONSOR AT ALL TIMES.
9. ANY CONTRACTOR PERSONNEL FOUND TO BE IN VIOLATION OF SECURITY REGULATIONS AND ACCESS RESTRICTIONS ARE SUBJECT TO DETAINMENT AND SEARCH BY BASE SECURITY FORCES.

ENVIRONMENTAL:

1. THE CONTRACTOR, AT HIS OWN EXPENSE, SHALL KEEP THE PROJECT AREA AND SURROUNDING AREA FREE FROM DUST NUISANCE.

LEGEND:

- ELEC DUCTBANK / KANALIZACJA KABLOWA
- COMM ELEC & COMM DUCTBANK / KANALIZACJA KABLOWA
- REFER TO SHEETS E-535 TO E-537 FOR DUCTBANK SCHEDULE
- E ELEC SERIES CKT / OBWÓD SZEREGOWY
- E TWO ELEC SERIES CKTS / DWA OBWODY SZEREGOWE
- E-1 (E) ELEC MANHOLE / STUDNIA ELE. (4 / E-520)
- J-1 (J) ELEC JUNCTION BOX / SKRZYNKA PRZYŁĄCZENIOWA (2 / E-510)
- EH-1 [E] ELEC HANDHOLE / STUDZIENKA ELE.
- 3-1 UNIDIR.THRESHOLD INSET LIGHT / JEDNOKIER. ZAGŁ. ŚWIATŁO PROGU
- 4-1 BIDIR. THRE&RWY END INSET LIGHT / DWUKIER. ZAGŁ. ŚWIATŁO PROGU I KOŃCA DS
- 5-1 BIDIR. RWY EDGE ELEVATED LIGHT / DWUKIER. NAZIEMNE ŚWIATŁO KRAW.DS
- 6-1 BIDIR. RWY EDGE SEMI FLUSH LIGHT / DWUKIER. ZAGŁĘBIONE ŚWIATŁO KRAWĘDZI DS
- 5-1 UNIDIR. OVRN EDGE ELEVATED LIGHT / NAZIEMNE ŚWIATŁO KRAW. WYBIEGU
- 21-1 OMNIDIR. TWY EDGE ELEVATED LIGHT / NAZIEMNE ŚWIATŁO KRAWĘDZI DK
- 22-1 OMNIDIR. TWY EDGE SEMI FLUSH LIGHT / ZAGŁĘBIONE ŚWIATŁO KRAWĘDZI DK
- 1-1 SEMI FLUSH APPROACH LIGHT / ZAGŁĘBIONE ŚWIATŁO PODEJŚCIA
- 2-1 SINGLE ELEVATED APPROACH LIGHT / POJEDYNCZE ŚWIATŁO PODEJŚCIA
- 1-1 APPROACH LIGHTS - ONE CROSSBAR / POPRZECZKA ŚWIATEŁ PODEJŚCIA
- 1-1 AREA LIGHT POLE / ŚWIATŁO NAZIEMNE
- IRDM, IACM, IGS SIGN / ZNACZNIK IRDM, IACM, IGS
- DUCTBANK SIMPLIFIED SECTION / UPROSZCZONY PRZEKRÓJ KANALIZACJI
- 1-1 CKT NUMBER - LIGHT NUMBER / NUMER OBWODU - NUMER OPRAWY
- 5A LIGHT BAR NUMBER / NUMER MASZTU
- P PAPI UNIT / JEDNOSTKA PAPI
- COMM COMM CKT / OBWÓD TELEKOM.
- T-1 (E) COMM MANHOLE / STUDNIA TELEKOM.
- T-5 [E] COMM HANDHOLE / STUDZIENKA TELEKOM.

SECTION / DETAIL SYMBOLS

9 / E-501 — DETAIL OR SECTION IDENTIFICATION NUMBER / NUMER SZCZEÓŁU LUB PRZEKROJU

SHEET ON WHICH DETAIL OR SECTION OF THE CONDITION IS DRAWN / NUMER RYSYUNKU NA KTÓRYM ZNAJDUJE SIĘ SZCZEGÓŁ LUB PRZEKRÓJ

9 / E-501 — DETAIL OR SECTION IDENTIFICATION NUMBER / NUMER SZCZEÓŁU LUB PRZEKROJU

TITLE

SCALE:

SHEET ON WHICH DETAIL OR SECTION OF THE CONDITION IS DRAWN / NUMER RYSYUNKU NA KTÓRYM ZNAJDUJE SIĘ SZCZEGÓŁ LUB PRZEKRÓJ

US Army Corps of Engineers®

MARK	DESCRIPTION	DATE

ISSUE DATE: MARCH 2017
SOLICITATION NO.:
PROJECT NO.: PAY215002A

DESIGNED BY: K. LOPEZ
DRAWN BY: L. ŁAWICKA
CHECKED BY: K. LEPERA
SUBMITTED BY: D. DIEHL
SIZE: ANSI D

U.S. ARMY CORPS OF ENGINEERS
KONRAD ADENAUER RING 39
WIESBADEN, D-65187 / GERMANY

AECOM INTERNATIONAL, INC.
SIEMENSSTRAAE 10
NEU-ISENBURG, 63263

ERI: IMPROVE SUPPORT INFRASTRUCTURE
ŁASK AB, POLAND

ELECTRICAL ABBREVIATIONS, LEGEND & NOTES
BRANŻA ELEKTRYCZNA - SKRÓTY, LEGENDA I UWAGI

SHEET ID
E-101

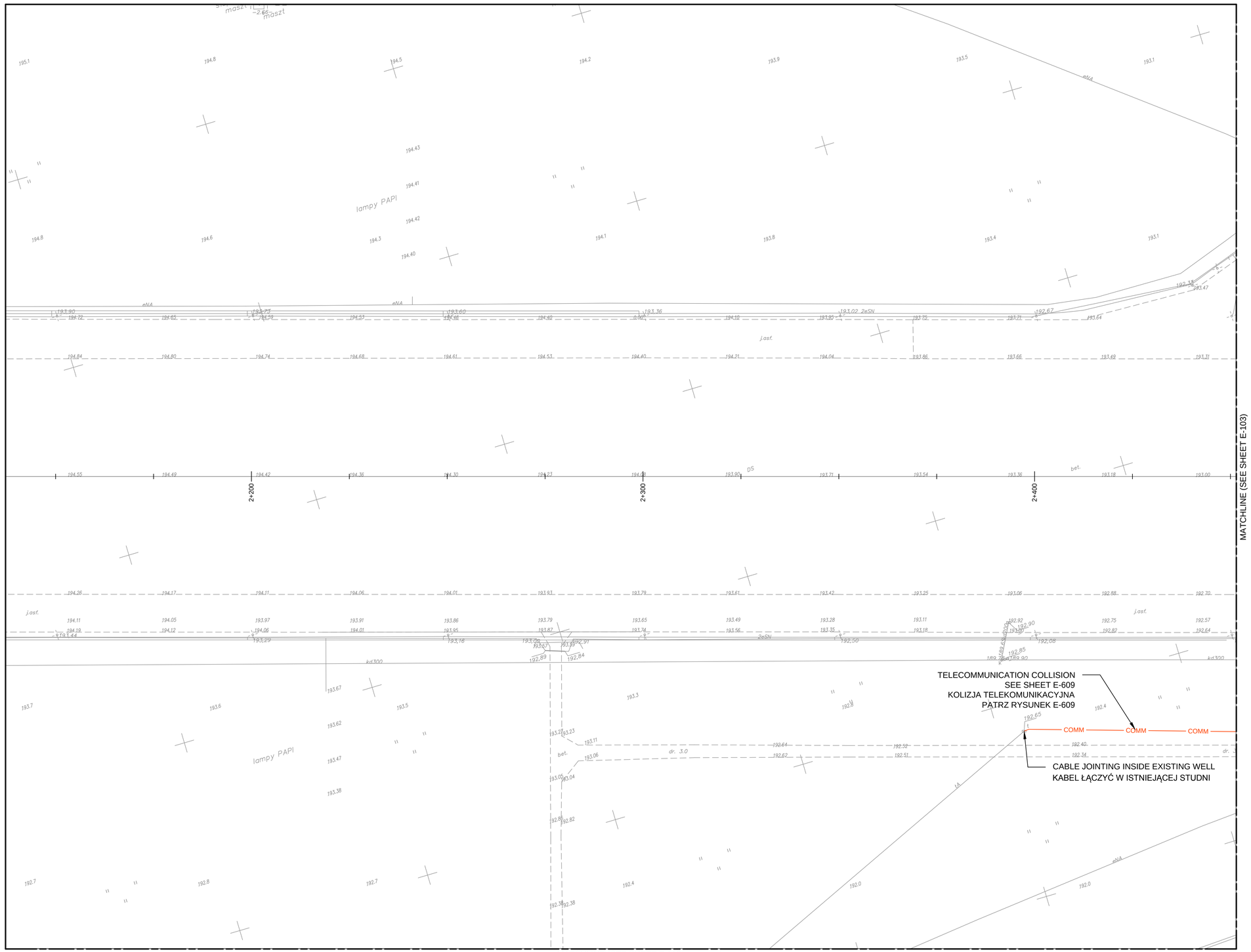

N

LEGEND:

- ELEC DUCTBANK KANALIZACJA KABLOWA
- ELEC & COMM DUCTBANK KANALIZACJA KABLOWA
- REFER TO SHEETS E-535 TO E-537 FOR DUCTBANK SCHEDULE
- ELEC SERIES CKT OBWÓD SZEREGOWY
- TWO ELEC SERIES CKTS DWA OBWODY SZEREGOWE
- E-1 ELEC MANHOLE STUDNIA ELE. (4 / E-520)
- J-1 ELEC JUNCTION BOX SKRZYNKA PRZYŁĄCZENIOWA (2 / E-510)
- EH-1 ELEC HANDHOLE STUDZIENKA ELE.
- 3-1 UNIDIR.THRESHOLD INSET LIGHT JEDNOKIER. ZAGŁ. ŚWIATŁO PROGU
- 4-1 BIDIR. THRE&RWY END INSET LIGHT DWUKIER. ZAGŁ. ŚWIATŁO PROGU I KOŃCA DS
- 5-1 BIDIR. RWY EDGE ELEVATED LIGHT DWUKIER. NAZIEMNE ŚWIATŁO KRAW.DS
- 6-1 BIDIR. RWY EDGE SEMI FLUSH LIGHT DWUKIER. ZAGŁĘBIONE ŚWIATŁO KRAWĘDZI DS
- 5-1 UNIDIR. OVRN EDGE ELEVATED LIGHT NAZIEMNE ŚWIATŁO KRAW. WYBIEGU
- 21-1 OMNIDIR. TWY EDGE ELEVATED LIGHT NAZIEMNE ŚWIATŁO KRAWĘDZI DK
- 22-1 OMNIDIR. TWY EDGE SEMI FLUSH LIGHT ZAGŁĘBIONE ŚWIATŁO KRAWĘDZI DK
- 1-1 SEMI FLUSH APPROACH LIGHT ZAGŁĘBIONE ŚWIATŁO PODEJŚCIA
- 2-1 SINGLE ELEVATED APPROACH LIGHT POJEDYNCZE ŚWIATŁO PODEJŚCIA
- 1-1 APPROACH LIGHTS - ONE CROSSBAR POPRZECZKA ŚWIATEŁ PODEJŚCIA
- 1-1 AREA LIGHT POLE ŚWIATŁO NAZIEMNE
- IRDM, IACM, IGS SIGN ZNACZNIK IRDM, IACM, IGS
- DUCTBANK SIMPLIFIED SECTION UPROSZCZONY PRZEKRÓJ KANALIZACJI
- 1-1 CKT NUMBER - LIGHT NUMBER NUMER OBWODU - NUMER OPRAWY
- 5A LIGHT BAR NUMBER NUMER MASZTU
- P PAPI UNIT JEDNOSTKA PAPI
- COMM COMM CKT OBWÓD TELEKOM.
- T-1 COMM MANHOLE STUDNIA TELEKOM.
- T-5 COMM HANDHOLE STUDZIENKA TELEKOM.

E-126	E-127				
	E-122	E-123	E-124		
E-102	E-103	E-104	E-105	E-106	E-107
E-110	E-111				
E-116	E-117				

0 25
SCALE IN METERS

US Army Corps of Engineers®

MARK	DESCRIPTION	DATE

DESIGNED BY: K. LORENZ
DRAWN BY: M. STASIEWICZ
CHECKED BY: K. LEPERA
SUBMITTED BY: D. DIEHL
SIZE: ANSI D
ISSUE DATE: MARCH 2017
SOLICITATION NO.:
PROJECT NO.: PAY215002A

U.S. ARMY CORPS OF ENGINEERS
KONRAD ADENAUER RING 39
WIESBADEN, D-65187 / GERMANY

AECOM INTERNATIONAL, INC.
SIEMENSSTRASE 10
NEU-ISENBURG, 63263

ERI: IMPROVE SUPPORT INFRASTRUCTURE
ŁASK AB, POLAND

ELECTRICAL LIGHTING&POWER PLAN
PLAN SYTUACYJNY - OŚWIETLENIE I ZASILANIE

SHEET ID
E-102

C:\PWWORKING\AECOM_EU\LLAWICKA\D0159839\15-D-0008-0003EE-103.DWG
5/12/2016 LUCYNA.LAWICKA 1:500

100%

MATCHLINE (SEE SHEET E-122)

EXISTING MANHOLE S-26, POINT OF CONNECTION WITH EXISTING PAPI CKT NO 8 & 9
ISTNIEJĄCA STUDNIA S-26, PUNKT WŁĄCZENIA DO ISTN. OBWODÓW PAPI NR 8,9

DIRECTIONAL DRILL

CKT 8 & 9

COLLISION NO 1
SEE SHEET E-605
KOLIZJA NR 1
PATRZ RYSUNEK E-605

TWO MANHOLES TO SEPERATE LOW AND MEDIUM VOLTAGE
SEE SHEET E-531 & E-537

EXISTING MANHOLE Z-1, POINT OF CONNECTION WITH EXISTING CKTS NO 1, 2, 3, 4, 5, 6, 21, 22
ISTNIEJĄCA STUDNIA Z-1, PUNKT WŁĄCZENIA DO ISTN. OBWODÓW NR 1, 2, 3, 4, 5, 6, 21, 22

CKT 21

CKT 22

PCKT 7

TCKT 2

PCKT 7

1
E-555

CKT 8 & 9

FOR DETAILS SEE SHEET E-535

CKT 5

CKT 6

EXISTING RWY POE
RWY EXTENSION POB
2+499.16

MATCHLINE (SEE SHEET E-102)

MATCHLINE (SEE SHEET E-104)

CABLE JOINTING INSIDE EXISTING HANDHOLE 6-20, CONNECT NEW CKT NO 5&6 WITH EXISTING CKT NO 5&6 BY CABLE SOCKET, REFER TO SHEET E-601
POŁĄCZYĆ PROJEKTOWANE OBWODY NR 5, 6 Z ISTN. W STUDZIENCE 6-20, PATRZ RYSUNEK E-601

CKT 6

CKT 5

COLLISION NO 3
SEE SHEET E-607
KOLIZJA NR 3
PATRZ RYSUNEK E-607

TCKT 2

PCKT 7

TWO MANHOLES TO SEPERATE LOW AND MEDIUM VOLTAGE
SEE SHEET E-531 & E-537

COLLISION NO 4
SEE SHEET E-608
KOLIZJA NR 4
PATRZ RYSUNEK E-608

2
E-555

PCKT 7

COLLISION NO 2
SEE SHEET E-606
KOLIZJA NR 2
PATRZ RYSUNEK E-606

MATCHLINE (SEE SHEET E-111)

N

LEGEND:

- ELEC DUCTBANK KANALIZACJA KABLOWA
- ELEC & COMM DUCTBANK KANALIZACJA KABLOWA
- REFER TO SHEETS E-535 TO E-537 FOR DUCTBANK SCHEDULE
- ELEC SERIES CKT OBWÓD SZEREGOWY
- TWO ELEC SERIES CKTS DWA OBWODY SZEREGOWE
- E-1 ELEC MANHOLE STUDNIA ELE. (4 / E-520)
- J-1 ELEC JUNCTION BOX SKRZYNKA PRZYŁĄCZENIOWA (2 / E-510)
- EH-1 ELEC HANDHOLE STUDZIENKA ELE.
- 3-1 UNIDIR.THRESHOLD INSET LIGHT JEDNOKIER. ZAGŁ. ŚWIATŁO PROGU
- 4-1 BIDIR. THRE&RWY END INSET LIGHT DWUKIER. ZAGŁ. ŚWIATŁO PROGU I KOŃCA DS
- 5-1 BIDIR. RWY EDGE ELEVATED LIGHT DWUKIER. NAZIEMNE ŚWIATŁO KRAW.DS
- 6-1 BIDIR. RWY EDGE SEMI FLUSH LIGHT DWUKIER. ZAGŁĘBIONE ŚWIATŁO KRAWĘDZI DS
- 5-1 UNIDIR. OVRN EDGE ELEVATED LIGHT NAZIEMNE ŚWIATŁO KRAW. WYBIEGU
- 21-1 OMNIDIR. TWY EDGE ELEVATED LIGHT NAZIEMNE ŚWIATŁO KRAWĘDZI DK
- 22-1 OMNIDIR. TWY EDGE SEMI FLUSH LIGHT ZAGŁĘBIONE ŚWIATŁO KRAWĘDZI DK
- 1-1 SEMI FLUSH APPROACH LIGHT ZAGŁĘBIONE ŚWIATŁO PODEJŚCIA
- 2-1 SINGLE ELEVATED APPROACH LIGHT POJEDYNCZE ŚWIATŁO PODEJŚCIA
- 1-1 APPROACH LIGHTS - ONE CROSSBAR POPRZECZKA ŚWIATEŁ PODEJŚCIA
- 1-1 AREA LIGHT POLE ŚWIATŁO NAZIEMNE
- IRDM, IACM, IGS SIGN ZNACZNIK IRDM, IACM, IGS
- DUCTBANK SIMPLIFIED SECTION UPROSZCZONY PRZEKRÓJ KANALIZACJI
- 1-1 CKT NUMBER - LIGHT NUMBER NUMER OBWODU - NUMER OPRAWY
- 5A LIGHT BAR NUMBER NUMER MASZTU
- P PAPI UNIT JEDNOSTKA PAPI
- COMM COMM CKT OBWÓD TELEKOM.
- T-1 COMM MANHOLE STUDNIA TELEKOM.
- T-5 COMM HANDHOLE STUDZIENKA TELEKOM.

E-126	E-127				
	E-122	E-123	E-124		
E-102	E-103	E-104	E-105	E-106	E-107
E-110	E-111				
E-116	E-117				

0 25
SCALE IN METERS

US Army Corps of Engineers®

MARK	DESCRIPTION	DATE

ISSUE DATE: MARCH 2017
SOLICITATION NO.:
PROJECT NO.: PAY215002A

DESIGNED BY: K. LOPEZ
DRAWN BY: M. STASIEWICZ
CHECKED BY: K. LEPERA
SUBMITTED BY: D. DIEHL
SIZE: ANSI D

U.S. ARMY CORPS OF ENGINEERS
KONRAD ADENAUER RING 29
WIESBADEN, D-65187 / GERMANY

AECOM INTERNATIONAL, INC.
SIEMENSSTRAGE 10
NEU-ISENBURG, 63263

ERI: IMPROVE SUPPORT INFRASTRUCTURE
ŁASK AB, POLAND

ELECTRICAL LIGHTING&POWER PLAN
PLAN SYTUACYJNY - OŚWIETLENIE I ZASILANIE

SHEET ID
E-103

C:\PWWORKING\AECOM_EU\LLAWICKA\D0159839\15-D-0008-0003EE-103.DWG
5/12/2016 LUCYNA.LAWICKA 1:500

100%

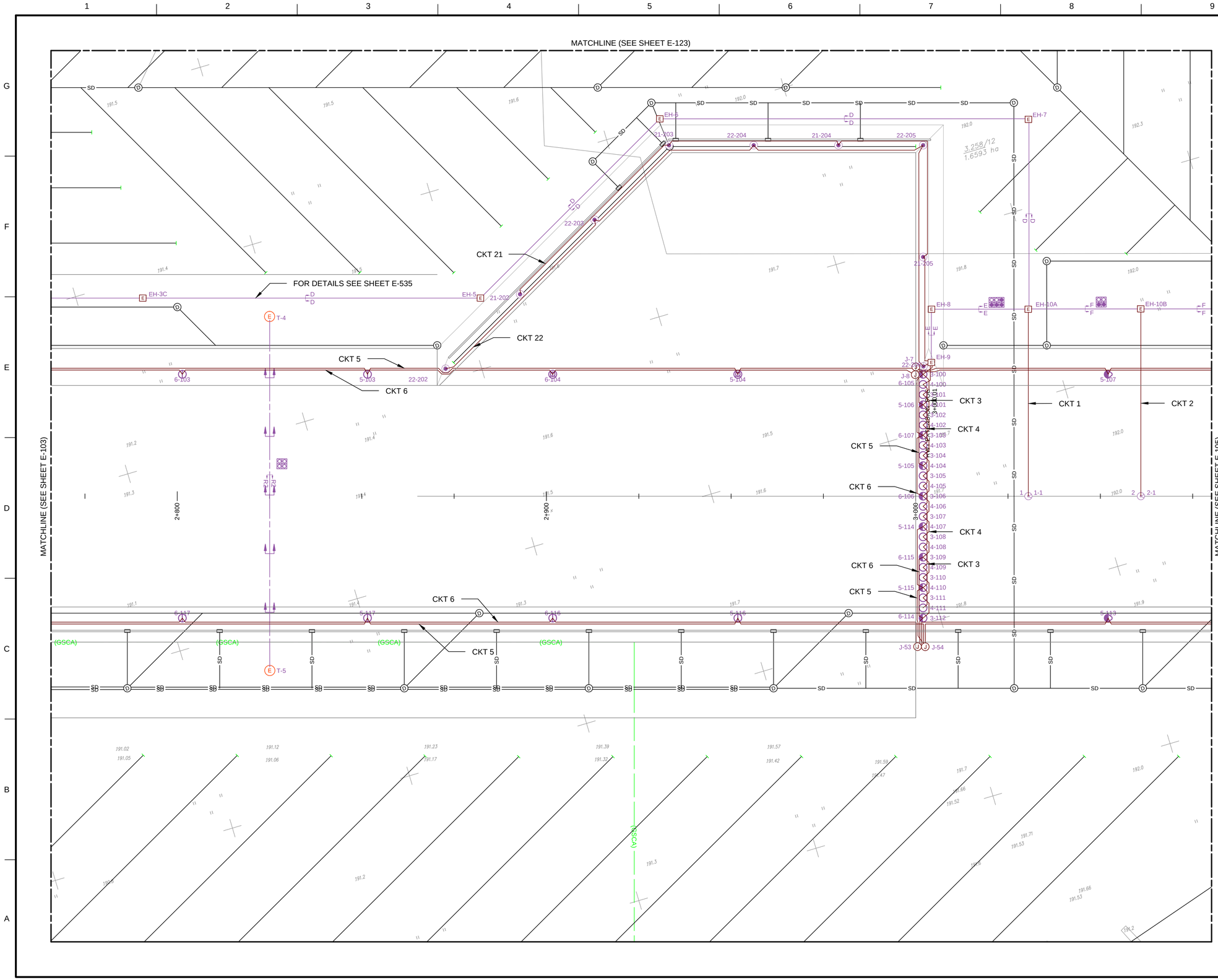

N

LEGEND:

- ELEC DUCTBANK KANALIZACJA KABLOWA
- ELEC & COMM DUCTBANK KANALIZACJA KABLOWA
- REFER TO SHEETS E-535 TO E-537 FOR DUCTBANK SCHEDULE
- ELEC SERIES CKT OBWÓD SZEREGOWY
- TWO ELEC SERIES CKTS DWA OBWODY SZEREGOWE
- E-1 ELEC MANHOLE STUDNIA ELE. (4 / E-520)
- J-1 ELEC JUNCTION BOX SKRZYNKA PRZYŁĄCZENIOWA (2 / E-510)
- EH-1 ELEC HANDHOLE STUDZIENKA ELE.
- 3-1 UNIDIR.THRESHOLD INSET LIGHT JEDNOKIER. ZAGŁ. ŚWIATŁO PROGU
- 4-1 BIDIR. THRE&RWY END INSET LIGHT DWUKIER. ZAGŁ. ŚWIATŁO PROGU I KOŃCA DS
- 5-1 BIDIR. RWY EDGE ELEVATED LIGHT DWUKIER. NAZIEMNE ŚWIATŁO KRAW.DS
- 6-1 BIDIR. RWY EDGE SEMI FLUSH LIGHT DWUKIER. ZAGŁĘBIONE ŚWIATŁO KRAWĘDZI DS
- 5-1 UNIDIR. OVRN EDGE ELEVATED LIGHT NAZIEMNE ŚWIATŁO KRAW. WYBIEGU
- 21-1 OMNIDIR. TWY EDGE ELEVATED LIGHT NAZIEMNE ŚWIATŁO KRAWĘDZI DK
- 22-1 OMNIDIR. TWY EDGE SEMI FLUSH LIGHT ZAGŁĘBIONE ŚWIATŁO KRAWĘDZI DK
- 1-1 SEMI FLUSH APPROACH LIGHT ZAGŁĘBIONE ŚWIATŁO PODEJŚCIA
- 2-1 SINGLE ELEVATED APPROACH LIGHT POJEDYNCZE ŚWIATŁO PODEJŚCIA
- 1-1 APPROACH LIGHTS - ONE CROSSBAR POPRZECZKA ŚWIATEŁ PODEJŚCIA
- 1-1 AREA LIGHT POLE ŚWIATŁO NAZIEMNE
- IRDM, IACM, IGS SIGN ZNACZNIK IRDM, IACM, IGS
- DUCTBANK SIMPLIFIED SECTION UPROSZCZONY PRZEKRÓJ KANALIZACJI
- 1-1 CKT NUMBER - LIGHT NUMBER NUMER OBWODU - NUMER OPRAWY
- 5A LIGHT BAR NUMBER NUMER MASZTU
- P PAPI UNIT JEDNOSTKA PAPI
- COMM COMM CKT OBWÓD TELEKOM.
- T-1 COMM MANHOLE STUDNIA TELEKOM.
- T-5 COMM HANDHOLE STUDZIENKA TELEKOM.

E-126	E-127				
	E-122	E-123	E-124		
E-102	E-103	E-104	E-105	E-106	E-107
E-110	E-111				
E-116	E-117				

0 25
SCALE IN METERS

US Army Corps of Engineers®

MARK	DESCRIPTION	DATE

DESIGNED BY: K. LORENZ
DRAWN BY: M. STASIEWICZ
CHECKED BY: K. LEPERA
SUBMITTED BY: D. DIEHL
SIZE: ANSI D
ISSUE DATE: MARCH 2017
SOLICITATION NO.:
PROJECT NO.: PAY215002A

U.S. ARMY CORPS OF ENGINEERS
KONRAD ADENAUER RING 39
WIESBADEN, D-65187 / GERMANY

AECOM INTERNATIONAL, INC.
SIEMENSSTRAE 10
NEU-ISENBURG, 63263

ERI: IMPROVE SUPPORT INFRASTRUCTURE
ŁASK AB, POLAND

ELECTRICAL LIGHTING&POWER PLAN
PLAN SYTUACYJNY - OŚWIETLENIE I ZASILANIE

SHEET ID
E-104

C:\PWWORKING\AECOM_EU\LLAWICKA\D0159839\15-D-0008-0003EE-103.DWG
5/12/2016 LUCYNA.LAWICKA 1:500

100%

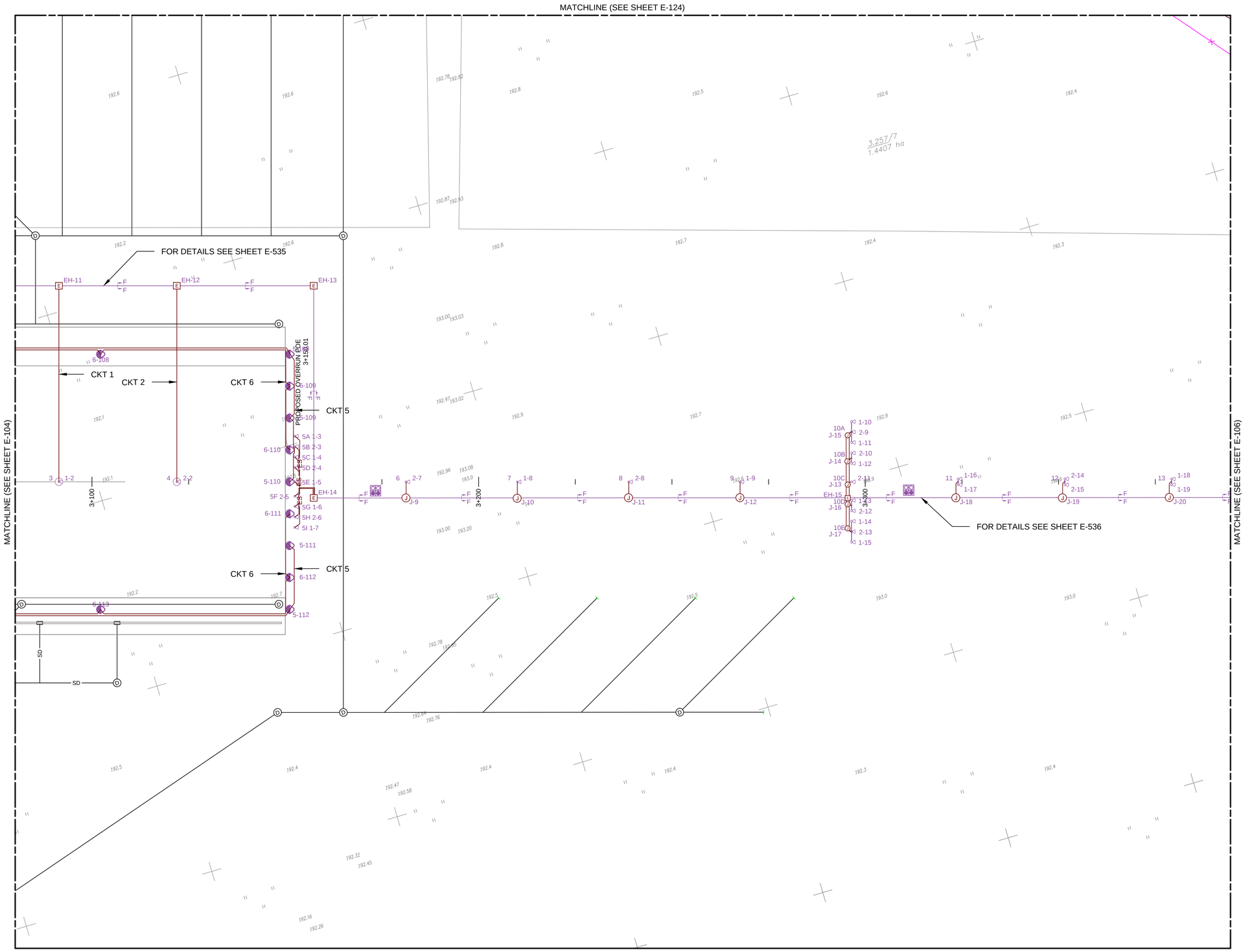

LEGEND:

- ELEC DUCTBANK / KANALIZACJA KABLOWA
- ELEC & COMM DUCTBANK / KANALIZACJA KABLOWA
- REFER TO SHEETS E-535 TO E-537 FOR DUCTBANK SCHEDULE
- ELEC SERIES CKT / OBWÓD SZEREGOWY
- TWO ELEC SERIES CKTS / DWA OBWODY SZEREGOWE
- E-1 ELEC MANHOLE / STUDNIA ELE. (4 / E-520)
- J-1 ELEC JUNCTION BOX / SKRZYNKA PRZYŁĄCZENIOWA (2 / E-510)
- EH-1 ELEC HANDHOLE / STUDZIENKA ELE.
- 3-1 UNIDIR.THRESHOLD INSET LIGHT / JEDNOKIER. ZAGŁ. ŚWIATŁO PROGU
- 4-1 BIDIR. THRE&RWY END INSET LIGHT / DWUKIER. ZAGŁ. ŚWIATŁO PROGU I KOŃCA DS
- 5-1 BIDIR. RWY EDGE ELEVATED LIGHT / DWUKIER. NAZIEMNE ŚWIATŁO KRAW.DS
- 6-1 BIDIR. RWY EDGE SEMI FLUSH LIGHT / DWUKIER. ZAGŁĘBIONE ŚWIATŁO KRAWĘDZI DS
- 5-1 UNIDIR. OVRN EDGE ELEVATED LIGHT / NAZIEMNE ŚWIATŁO KRAW. WYBIEGU
- 21-1 OMNIDIR. TWY EDGE ELEVATED LIGHT / NAZIEMNE ŚWIATŁO KRAWĘDZI DK
- 22-1 OMNIDIR. TWY EDGE SEMI FLUSH LIGHT / ZAGŁĘBIONE ŚWIATŁO KRAWĘDZI DK
- 1-1 SEMI FLUSH APPROACH LIGHT / ZAGŁĘBIONE ŚWIATŁO PODEJŚCIA
- 2-1 SINGLE ELEVATED APPROACH LIGHT / POJEDYNCZE ŚWIATŁO PODEJŚCIA
- 1-1 APPROACH LIGHTS - ONE CROSSBAR / POPRZECZKA ŚWIATEŁ PODEJŚCIA
- 1-1 AREA LIGHT POLE / ŚWIATŁO NAZIEMNE
- IRDM, IACM, IGS SIGN / ZNACZNIK IRDM, IACM, IGS
- DUCTBANK SIMPLIFIED SECTION / UPROSZCZONY PRZEKRÓJ KANALIZACJI
- 1-1 CKT NUMBER - LIGHT NUMBER / NUMER OBWODU - NUMER OPRAWY
- 5A LIGHT BAR NUMBER / NUMER MASZTU
- P PAPI UNIT / JEDNOSTKA PAPI
- COMM COMM CKT / OBWÓD TELEKOM.
- T-1 COMM MANHOLE / STUDNIA TELEKOM.
- T-5 COMM HANDHOLE / STUDZIENKA TELEKOM.

E-126	E-127				
	E-122	E-123	E-124		
E-102	E-103	E-104	E-105	E-106	E-107
E-110	E-111				
E-116	E-117				

0 25
SCALE IN METERS

US Army Corps of Engineers®

MARK	DESCRIPTION	DATE

DESIGNED BY: K. LORENZ	ISSUE DATE: MARCH 2017
DRAWN BY: M. STASIEWICZ	SOLICITATION NO.:
CHECKED BY: K. LEPERA	PROJECT NO.: PAY215002A
SUBMITTED BY: D. DIEHL	
SIZE: ANSI D	

U.S. ARMY CORPS OF ENGINEERS
KONRAD ADENAUER RING 39
WIESBADEN, D-65187 / GERMANY

AECOM INTERNATIONAL, INC.
SIEMENSSTRASE 10
NEU-ISENBURG, 63263

ERI: IMPROVE SUPPORT INFRASTRUCTURE
ŁASK AB, POLAND

ELECTRICAL LIGHTING&POWER PLAN
PLAN SYTUACYJNY - OŚWIETLENIE I ZASILANIE

SHEET ID
E-105

C:\PWWORKING\AECOM_EU\LLAWICKA\D0159839\15-D-0008-0003EE-103.DWG
5/12/2016 LUCYNA.LAWICKA 1:500

100%

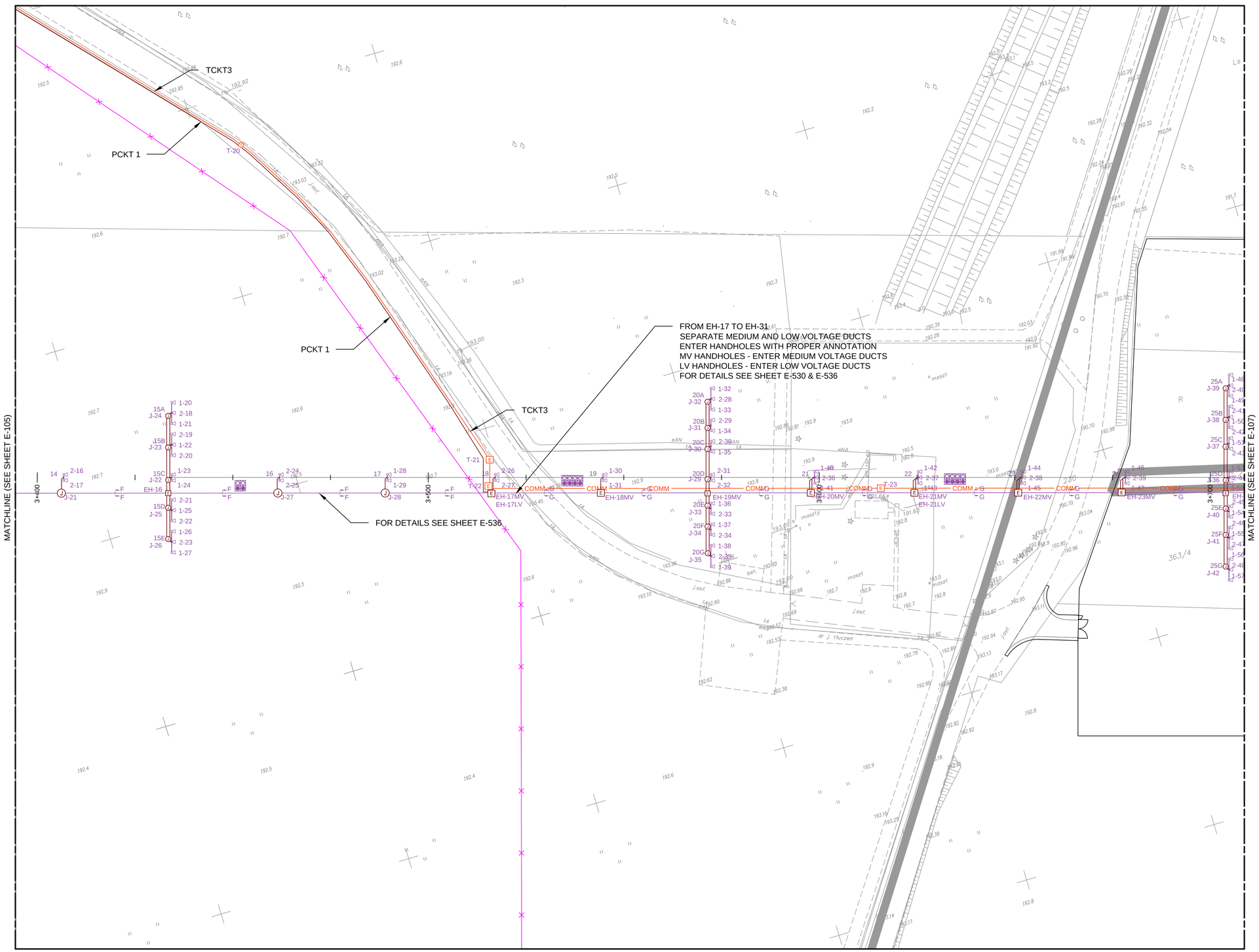

N

LEGEND:

- ELEC DUCTBANK / KANALIZACJA KABLOWA
- ELEC & COMM DUCTBANK / KANALIZACJA KABLOWA
- REFER TO SHEETS E-535 TO E-537 FOR DUCTBANK SCHEDULE
- ELEC SERIES CKT / OBWÓD SZEREGOWY
- TWO ELEC SERIES CKTS / DWA OBWODY SZEREGOWE
- E-1 ELEC MANHOLE / STUDNIA ELE. (4 / E-520)
- J-1 ELEC JUNCTION BOX / SKRZYNKA PRZYŁĄCZENIOWA (2 / E-510)
- EH-1 ELEC HANDHOLE / STUDZIENKA ELE.
- 3-1 UNIDIR.THRESHOLD INSET LIGHT / JEDNOKIER. ZAGŁ. ŚWIATŁO PROGU
- 4-1 BIDIR. THRE&RWY END INSET LIGHT / DWUKIER. ZAGŁ. ŚWIATŁO PROGU I KOŃCA DS
- 5-1 BIDIR. RWY EDGE ELEVATED LIGHT / DWUKIER. NAZIEMNE ŚWIATŁO KRAW.DS
- 6-1 BIDIR. RWY EDGE SEMI FLUSH LIGHT / DWUKIER. ZAGŁĘBIONE ŚWIATŁO KRAWĘDZI DS
- 5-1 UNIDIR. OVRN EDGE ELEVATED LIGHT / NAZIEMNE ŚWIATŁO KRAW. WYBIEGU
- 21-1 OMNIDIR. TWY EDGE ELEVATED LIGHT / NAZIEMNE ŚWIATŁO KRAWĘDZI DK
- 22-1 OMNIDIR. TWY EDGE SEMI FLUSH LIGHT / ZAGŁĘBIONE ŚWIATŁO KRAWĘDZI DK
- 1-1 SEMI FLUSH APPROACH LIGHT / ZAGŁĘBIONE ŚWIATŁO PODEJŚCIA
- 2-1 SINGLE ELEVATED APPROACH LIGHT / POJEDYNCZE ŚWIATŁO PODEJŚCIA
- 1-1 APPROACH LIGHTS - ONE CROSSBAR / POPRZECZKA ŚWIATEŁ PODEJŚCIA
- 1-1 AREA LIGHT POLE / ŚWIATŁO NAZIEMNE
- IRDM, IACM, IGS SIGN / ZNACZNIK IRDM, IACM, IGS
- DUCTBANK SIMPLIFIED SECTION / UPROSZCZONY PRZEKRÓJ KANALIZACJI
- 1-1 CKT NUMBER - LIGHT NUMBER / NUMER OBWODU - NUMER OPRAWY
- 5A LIGHT BAR NUMBER / NUMER MASZTU
- PAPI UNIT / JEDNOSTKA PAPI
- COMM CKT / OBWÓD TELEKOM.
- T-1 COMM MANHOLE / STUDNIA TELEKOM.
- T-5 COMM HANDHOLE / STUDZIENKA TELEKOM.

E-126	E-127				
	E-122	E-123	E-124		
E-102	E-103	E-104	E-105	E-106	E-107
E-110	E-111				
E-116	E-117				

0 25
SCALE IN METERS

US Army Corps of Engineers®

MARK	DESCRIPTION	DATE

ISSUE DATE: MARCH 2017
SOLICITATION NO.:
PROJECT NO.: PAYZ15002A
DESIGNED BY: K. LORENZ
DRAWN BY: M. STASIEWICZ
CHECKED BY: K. LEPERA
SUBMITTED BY: D. DIEHL
SIZE: ANSI D

U.S. ARMY CORPS OF ENGINEERS
KONRAD ADENAUER RING 39
WIESBADEN, D-65187 / GERMANY

AECOM INTERNATIONAL, INC.
SIEMENSSTRAßE 10
NEU-ISENBURG, 63263

ERI: IMPROVE SUPPORT INFRASTRUCTURE
ŁASK AB, POLAND

ELECTRICAL LIGHTING&POWER PLAN
PLAN SYTUACYJNY - OŚWIETLENIE I ZASILANIE

SHEET ID
E-106

C:\PWWORKING\AECOM_EU\LLAWICKA\D0159839\15-D-0008-0003EE-103.DWG
5/12/2016 LUCYNA.LAWICKA 1:500

100%

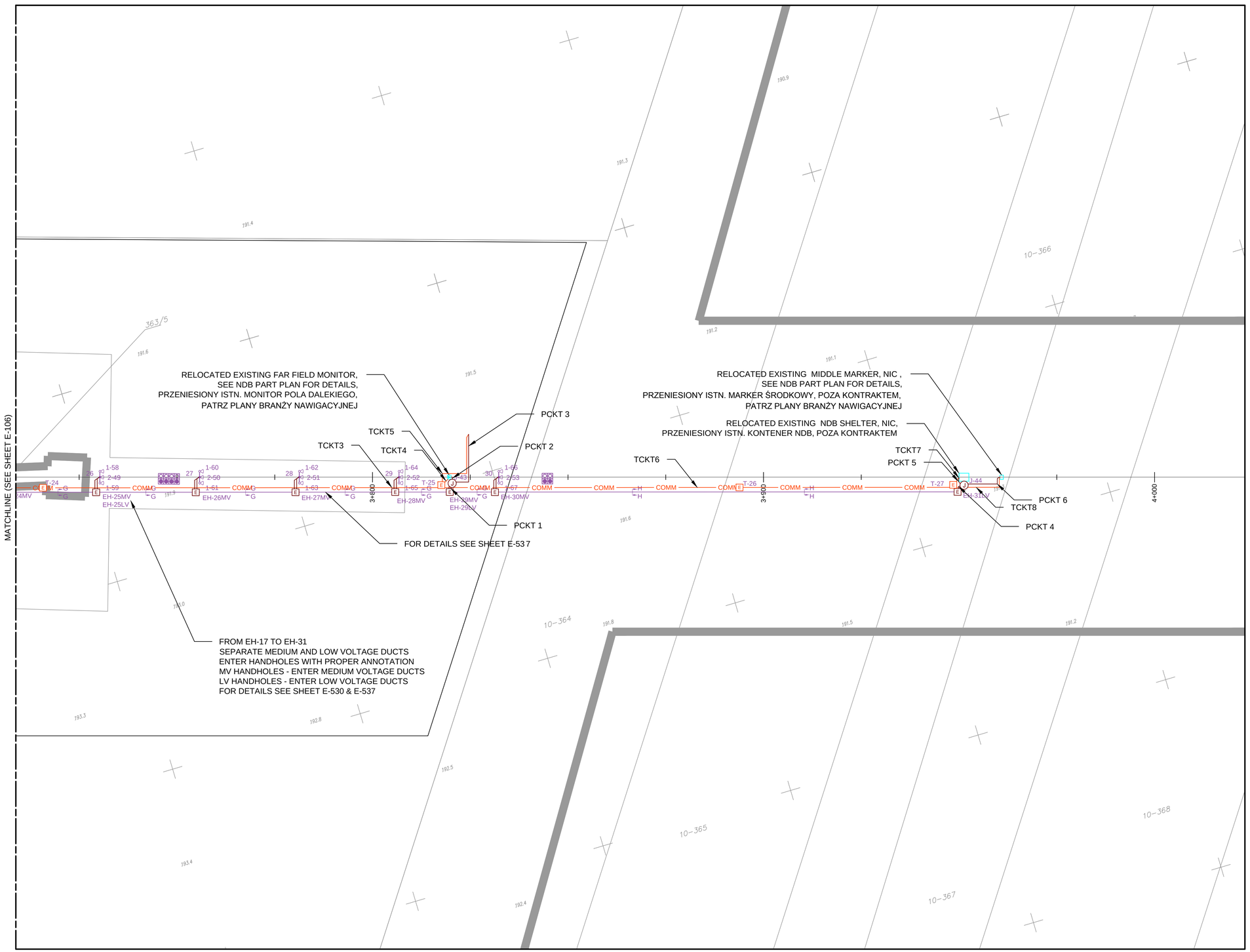

LEGEND:

- ELEC DUCTBANK / KANALIZACJA KABLOWA
- ELEC & COMM DUCTBANK / KANALIZACJA KABLOWA
- REFER TO SHEETS E-535 TO E-537 FOR DUCTBANK SCHEDULE
- ELEC SERIES CKT / OBWÓD SZEREGOWY
- TWO ELEC SERIES CKTS / DWA OBWODY SZEREGOWE
- E-1 ELEC MANHOLE / STUDNIA ELE. (4 / E-520)
- J-1 ELEC JUNCTION BOX / SKRZYNKA PRZYŁĄCZENIOWA (2 / E-510)
- EH-1 ELEC HANDHOLE / STUDZIENKA ELE.
- 3-1 UNIDIR.THRESHOLD INSET LIGHT / JEDNOKIER. ZAGŁ. ŚWIATŁO PROGU
- 4-1 BIDIR. THRE&RWY END INSET LIGHT / DWUKIER. ZAGŁ. ŚWIATŁO PROGU I KOŃCA DS
- 5-1 BIDIR. RWY EDGE ELEVATED LIGHT / DWUKIER. NAZIEMNE ŚWIATŁO KRAW.DS
- 6-1 BIDIR. RWY EDGE SEMI FLUSH LIGHT / DWUKIER. ZAGŁĘBIONE ŚWIATŁO KRAWĘDZI DS
- 5-1 UNIDIR. OVRN EDGE ELEVATED LIGHT / NAZIEMNE ŚWIATŁO KRAW. WYBIEGU
- 21-1 OMNIDIR. TWY EDGE ELEVATED LIGHT / NAZIEMNE ŚWIATŁO KRAWĘDZI DK
- 22-1 OMNIDIR. TWY EDGE SEMI FLUSH LIGHT / ZAGŁĘBIONE ŚWIATŁO KRAWĘDZI DK
- 1-1 SEMI FLUSH APPROACH LIGHT / ZAGŁĘBIONE ŚWIATŁO PODEJŚCIA
- 2-1 SINGLE ELEVATED APPROACH LIGHT / POJEDYNCZE ŚWIATŁO PODEJŚCIA
- 1-1 APPROACH LIGHTS - ONE CROSSBAR / POPRZECZKA ŚWIATEŁ PODEJŚCIA
- 1-1 AREA LIGHT POLE / ŚWIATŁO NAZIEMNE
- IRDM, IACM, IGS SIGN / ZNACZNIK IRDM, IACM, IGS
- DUCTBANK SIMPLIFIED SECTION / UPROSZCZONY PRZEKRÓJ KANALIZACJI
- 1-1 CKT NUMBER - LIGHT NUMBER / NUMER OBWODU - NUMER OPRAWY
- 5A LIGHT BAR NUMBER / NUMER MASZTU
- P PAPI UNIT / JEDNOSTKA PAPI
- COMM COMM CKT / OBWÓD TELEKOM.
- T-1 COMM MANHOLE / STUDNIA TELEKOM.
- T-5 COMM HANDHOLE / STUDZIENKA TELEKOM.

E-126	E-127				
	E-122	E-123	E-124		
E-102	E-103	E-104	E-105	E-106	E-107
E-110	E-111				
E-116	E-117				

0 25
SCALE IN METERS

US Army Corps of Engineers®

MARK	DESCRIPTION	DATE

DESIGNED BY: K. LORENZ
DRAWN BY: M. STASIEWICZ
CHECKED BY: K. LEPERA
SUBMITTED BY: D. DIEHL
SIZE: ANSI D
ISSUE DATE: MARCH 2017
SOLICITATION NO.:
PROJECT NO.: PAYZ150002A

U.S. ARMY CORPS OF ENGINEERS
KONRAD ADENAUER RING 39
WIESBADEN, D-65187 / GERMANY

AECOM INTERNATIONAL, INC.
SIEMENSSTRAGE 10
NEU-ISENBURG, 63263

ERI: IMPROVE SUPPORT INFRASTRUCTURE
ŁASK AB, POLAND

ELECTRICAL LIGHTING&POWER PLAN
PLAN SYTUACYJNY - OŚWIETLENIE I ZASILANIE

SHEET ID
E-107

C:\PWWORKING\AECOM_EU\LLAWICKA\D0159839\15-D-0008-0003EE-103.DWG
5/12/2016 LUCYNA.LAWICKA 1:500

100%

MATCHLINE (SEE SHEET E-102)

LOW VOLTAGE DISTIRBUTION CABINET "KRASULA"
ROZDZIELNIA nn "KRASULA"

PCKT 10

MATCHLINE (SEE SHEET E-111)

MATCHLINE (SEE SHEET E-116)

LEGEND:

- ELEC DUCTBANK / KANALIZACJA KABLOWA
- ELEC & COMM DUCTBANK / KANALIZACJA KABLOWA
- REFER TO SHEETS E-535 TO E-537 FOR DUCTBANK SCHEDULE
- ELEC SERIES CKT / OBWÓD SZEREGOWY
- TWO ELEC SERIES CKTS / DWA OBWODY SZEREGOWE
- E-1 ELEC MANHOLE / STUDNIA ELE. (4 / E-520)
- J-1 ELEC JUNCTION BOX / SKRZYNKA PRZYŁĄCZENIOWA (2 / E-510)
- EH-1 ELEC HANDHOLE / STUDZIENKA ELE.
- 3-1 UNIDIR.THRESHOLD INSET LIGHT / JEDNOKIER. ZAGŁ. ŚWIATŁO PROGU
- 4-1 BIDIR. THRE&RWY END INSET LIGHT / DWUKIER. ZAGŁ. ŚWIATŁO PROGU I KOŃCA DS
- 5-1 BIDIR. RWY EDGE ELEVATED LIGHT / DWUKIER. NAZIEMNE ŚWIATŁO KRAW.DS
- 6-1 BIDIR. RWY EDGE SEMI FLUSH LIGHT / DWUKIER. ZAGŁĘBIONE ŚWIATŁO KRAWĘDZI DS
- 5-1 UNIDIR. OVRN EDGE ELEVATED LIGHT / NAZIEMNE ŚWIATŁO KRAW. WYBIEGU
- 21-1 OMNIDIR. TWY EDGE ELEVATED LIGHT / NAZIEMNE ŚWIATŁO KRAWĘDZI DK
- 22-1 OMNIDIR. TWY EDGE SEMI FLUSH LIGHT / ZAGŁĘBIONE ŚWIATŁO KRAWĘDZI DK
- 1-1 SEMI FLUSH APPROACH LIGHT / ZAGŁĘBIONE ŚWIATŁO PODEJŚCIA
- 2-1 SINGLE ELEVATED APPROACH LIGHT / POJEDYNCZE ŚWIATŁO PODEJŚCIA
- 1-1 APPROACH LIGHTS - ONE CROSSBAR / POPRZECZKA ŚWIATEŁ PODEJŚCIA
- 1-1 AREA LIGHT POLE / ŚWIATŁO NAZIEMNE
- IRDM, IACM, IGS SIGN / ZNACZNIK IRDM, IACM, IGS
- DUCTBANK SIMPLIFIED SECTION / UPROSZCZONY PRZEKRÓJ KANALIZACJI
- 1-1 CKT NUMBER - LIGHT NUMBER / NUMER OBWODU - NUMER OPRAWY
- 5A LIGHT BAR NUMBER / NUMER MASZTU
- P PAPI UNIT / JEDNOSTKA PAPI
- COMM COMM CKT / OBWÓD TELEKOM.
- T-1 COMM MANHOLE / STUDNIA TELEKOM.
- T-5 COMM HANDHOLE / STUDZIENKA TELEKOM.

E-126	E-127				
	E-122	E-123	E-124		
E-102	E-103	E-104	E-105	E-106	E-107
E-110	E-111				
E-116	E-117				

0 25
SCALE IN METERS

US Army Corps of Engineers®

MARK	DESCRIPTION	DATE

DESIGNED BY: K. LORENZ
DRAWN BY: M. STASIEWICZ
CHECKED BY: K. LEPERA
SUBMITTED BY: D. DIEHL
SIZE: ANSI D
ISSUE DATE: MARCH 2017
SOLICITATION NO.:
PROJECT NO.: PAY215002A

U.S. ARMY CORPS OF ENGINEERS
KONRAD ADENAUER RING 39
WIESBADEN, D-65187 / GERMANY

AECOM INTERNATIONAL, INC.
SIEMENSSTRAAE 10
NEU-ISENBURG, 63263

ERI: IMPROVE SUPPORT INFRASTRUCTURE
ŁASK AB, POLAND

ELECTRICAL LIGHTING&POWER PLAN
PLAN SYTUACYJNY - OŚWIETLENIE I ZASILANIE

SHEET ID
E-110

C:\PWWORKING\AECOM_EU\LLAWICKA\D0159839\15-D-0008-0003EE-103.DWG
5/12/2016 LUCYNA.LAWICKA 1:500

100%

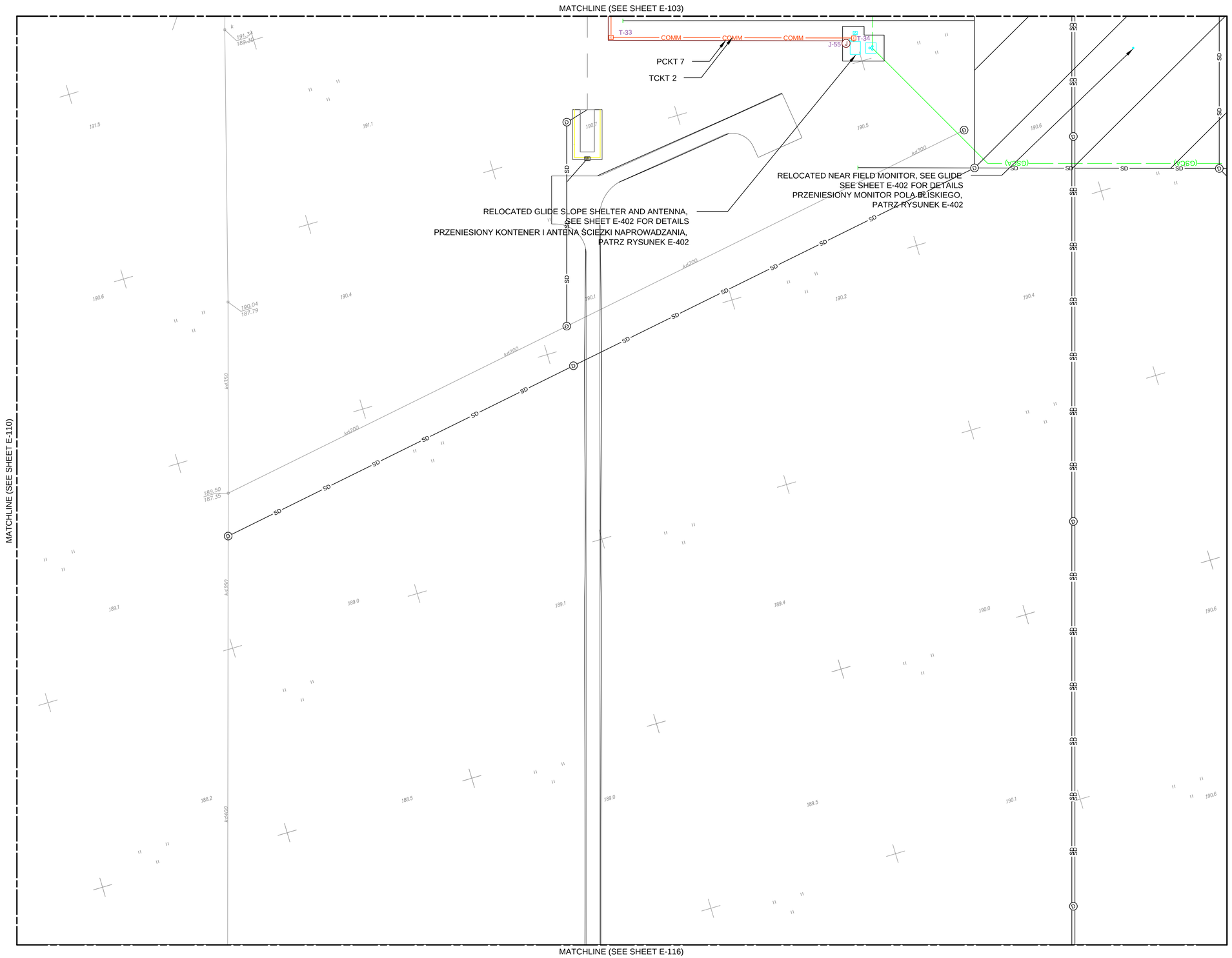

LEGEND:

- ELEC DUCTBANK — KANALIZACJA KABLOWA
- ELEC & COMM DUCTBANK — KANALIZACJA KABLOWA
  REFER TO SHEETS E-535 TO E-537 FOR DUCTBANK SCHEDULE
- ELEC SERIES CKT — OBWÓD SZEREGOWY
- TWO ELEC SERIES CKTS — DWA OBWODY SZEREGOWE
- E-1 ELEC MANHOLE — STUDNIA ELE. (4 / E-520)
- J-1 ELEC JUNCTION BOX — SKRZYNKA PRZYŁĄCZENIOWA (2 / E-510)
- EH-1 ELEC HANDHOLE — STUDZIENKA ELE.
- 3-1 UNIDIR.THRESHOLD INSET LIGHT — JEDNOKIER. ZAGŁ. ŚWIATŁO PROGU
- 4-1 BIDIR. THRE&RWY END INSET LIGHT — DWUKIER. ZAGŁ. ŚWIATŁO PROGU I KOŃCA DS
- 5-1 BIDIR. RWY EDGE ELEVATED LIGHT — DWUKIER. NAZIEMNE ŚWIATŁO KRAW.DS
- 6-1 BIDIR. RWY EDGE SEMI FLUSH LIGHT — DWUKIER. ZAGŁĘBIONE ŚWIATŁO KRAWĘDZI DS
- 5-1 UNIDIR. OVRN EDGE ELEVATED LIGHT — NAZIEMNE ŚWIATŁO KRAW. WYBIEGU
- 21-1 OMNIDIR. TWY EDGE ELEVATED LIGHT — NAZIEMNE ŚWIATŁO KRAWĘDZI DK
- 22-1 OMNIDIR. TWY EDGE SEMI FLUSH LIGHT — ZAGŁĘBIONE ŚWIATŁO KRAWĘDZI DK
- 1-1 SEMI FLUSH APPROACH LIGHT — ZAGŁĘBIONE ŚWIATŁO PODEJŚCIA
- 2-1 SINGLE ELEVATED APPROACH LIGHT — POJEDYNCZE ŚWIATŁO PODEJŚCIA
- 1-1 APPROACH LIGHTS - ONE CROSSBAR — POPRZECZKA ŚWIATEŁ PODEJŚCIA
- 1-1 AREA LIGHT POLE — ŚWIATŁO NAZIEMNE
- IRDM, IACM, IGS SIGN — ZNACZNIK IRDM, IACM, IGS
- DUCTBANK SIMPLIFIED SECTION — UPROSZCZONY PRZEKRÓJ KANALIZACJI
- 1-1 CKT NUMBER - LIGHT NUMBER — NUMER OBWODU - NUMER OPRAWY
- 5A LIGHT BAR NUMBER — NUMER MASZTU
- P PAPI UNIT — JEDNOSTKA PAPI
- COMM COMM CKT — OBWÓD TELEKOM.
- T-1 COMM MANHOLE — STUDNIA TELEKOM.
- T-5 COMM HANDHOLE — STUDZIENKA TELEKOM.

E-126	E-127				
	E-122	E-123	E-124		
E-102	E-103	E-104	E-105	E-106	E-107
E-110	E-111				
E-116	E-117				

0 — 25
SCALE IN METERS

US Army Corps of Engineers®

MARK	DESCRIPTION	DATE

ISSUE DATE: MARCH 2017
SOLICITATION NO.:
PROJECT NO.: PAYZ150024

DESIGNED BY: K. LORENZ
DRAWN BY: M. STASIEWICZ
CHECKED BY: K. LEPERA
SUBMITTED BY: D. DIEHL
SIZE: ANSI D

U.S. ARMY CORPS OF ENGINEERS
KONRAD ADENAUER RING 39
WIESBADEN, D-65187 / GERMANY

AECOM INTERNATIONAL, INC.
SIEMENSSTRASE 10
NEU-ISENBURG, 63263

ERI: IMPROVE SUPPORT INFRASTRUCTURE
ŁASK AB, POLAND

ELECTRICAL LIGHTING&POWER PLAN
PLAN SYTUACYJNY - OŚWIETLENIE I ZASILANIE

SHEET ID
E-111

C:\PWWORKING\AECOM_EU\LLAWICKA\D0159839\15-D-0008-0003EE-103.DWG
5/12/2016 LUCYNA.LAWICKA 1:500

100%

MATCHLINE (SEE SHEET E-110)

PCKT 10

PCKT 10

MATCHLINE (SEE SHEET E-117)

LEGEND:

- ELEC DUCTBANK KANALIZACJA KABLOWA
- ELEC & COMM DUCTBANK KANALIZACJA KABLOWA
- REFER TO SHEETS E-535 TO E-537 FOR DUCTBANK SCHEDULE
- ELEC SERIES CKT OBWÓD SZEREGOWY
- TWO ELEC SERIES CKTS DWA OBWODY SZEREGOWE
- E-1 ELEC MANHOLE STUDNIA ELE. (4 / E-520)
- J-1 ELEC JUNCTION BOX SKRZYNKA PRZYŁĄCZENIOWA (2 / E-510)
- EH-1 ELEC HANDHOLE STUDZIENKA ELE.
- 3-1 UNIDIR.THRESHOLD INSET LIGHT JEDNOKIER. ZAGŁ. ŚWIATŁO PROGU
- 4-1 BIDIR. THRE&RWY END INSET LIGHT DWUKIER. ZAGŁ. ŚWIATŁO PROGU I KOŃCA DS
- 5-1 BIDIR. RWY EDGE ELEVATED LIGHT DWUKIER. NAZIEMNE ŚWIATŁO KRAW.DS
- 6-1 BIDIR. RWY EDGE SEMI FLUSH LIGHT DWUKIER. ZAGŁĘBIONE ŚWIATŁO KRAWĘDZI DS
- 5-1 UNIDIR. OVRN EDGE ELEVATED LIGHT NAZIEMNE ŚWIATŁO KRAW. WYBIEGU
- 21-1 OMNIDIR. TWY EDGE ELEVATED LIGHT NAZIEMNE ŚWIATŁO KRAWĘDZI DK
- 22-1 OMNIDIR. TWY EDGE SEMI FLUSH LIGHT ZAGŁĘBIONE ŚWIATŁO KRAWĘDZI DK
- 1-1 SEMI FLUSH APPROACH LIGHT ZAGŁĘBIONE ŚWIATŁO PODEJŚCIA
- 2-1 SINGLE ELEVATED APPROACH LIGHT POJEDYNCZE ŚWIATŁO PODEJŚCIA
- 1-1 APPROACH LIGHTS - ONE CROSSBAR POPRZECZKA ŚWIATEŁ PODEJŚCIA
- 1-1 AREA LIGHT POLE ŚWIATŁO NAZIEMNE
- IRDM, IACM, IGS SIGN ZNACZNIK IRDM, IACM, IGS
- DUCTBANK SIMPLIFIED SECTION UPROSZCZONY PRZEKRÓJ KANALIZACJI
- 1-1 CKT NUMBER - LIGHT NUMBER NUMER OBWODU - NUMER OPRAWY
- 5A LIGHT BAR NUMBER NUMER MASZTU
- P PAPI UNIT JEDNOSTKA PAPI
- COMM COMM CKT OBWÓD TELEKOM.
- T-1 COMM MANHOLE STUDNIA TELEKOM.
- T-5 COMM HANDHOLE STUDZIENKA TELEKOM.

E-126	E-127				
	E-122	E-123	E-124		
E-102	E-103	E-104	E-105	E-106	E-107
E-110	E-111				
E-116	E-117				

0 25
SCALE IN METERS

US Army Corps of Engineers®

MARK	DESCRIPTION	DATE

DESIGNED BY: K. LORENZ
DRAWN BY: M. STASIEWICZ
CHECKED BY: K. LEPERA
SUBMITTED BY: D. DIEHL
SIZE: ANSI D
ISSUE DATE: MARCH 2017
SOLICITATION NO.:
PROJECT NO.: PAYZ150024

U.S. ARMY CORPS OF ENGINEERS
KONRAD ADENAUER RING 39
WIESBADEN, D-65187 / GERMANY

AECOM INTERNATIONAL, INC.
SIEMENSSTRABE 10
NEU-ISENBURG, 63263

ERI: IMPROVE SUPPORT INFRASTRUCTURE
ŁASK AB, POLAND

ELECTRICAL LIGHTING&POWER PLAN
PLAN SYTUACYJNY - OŚWIETLENIE I ZASILANIE

SHEET ID
E-116

C:\PWWORKING\AECOM_EU\LLAWICKA\D0159839\15-D-0008-0003EE-103.DWG
5/12/2016 LUCYNA.LAWICKA 1:500

100%

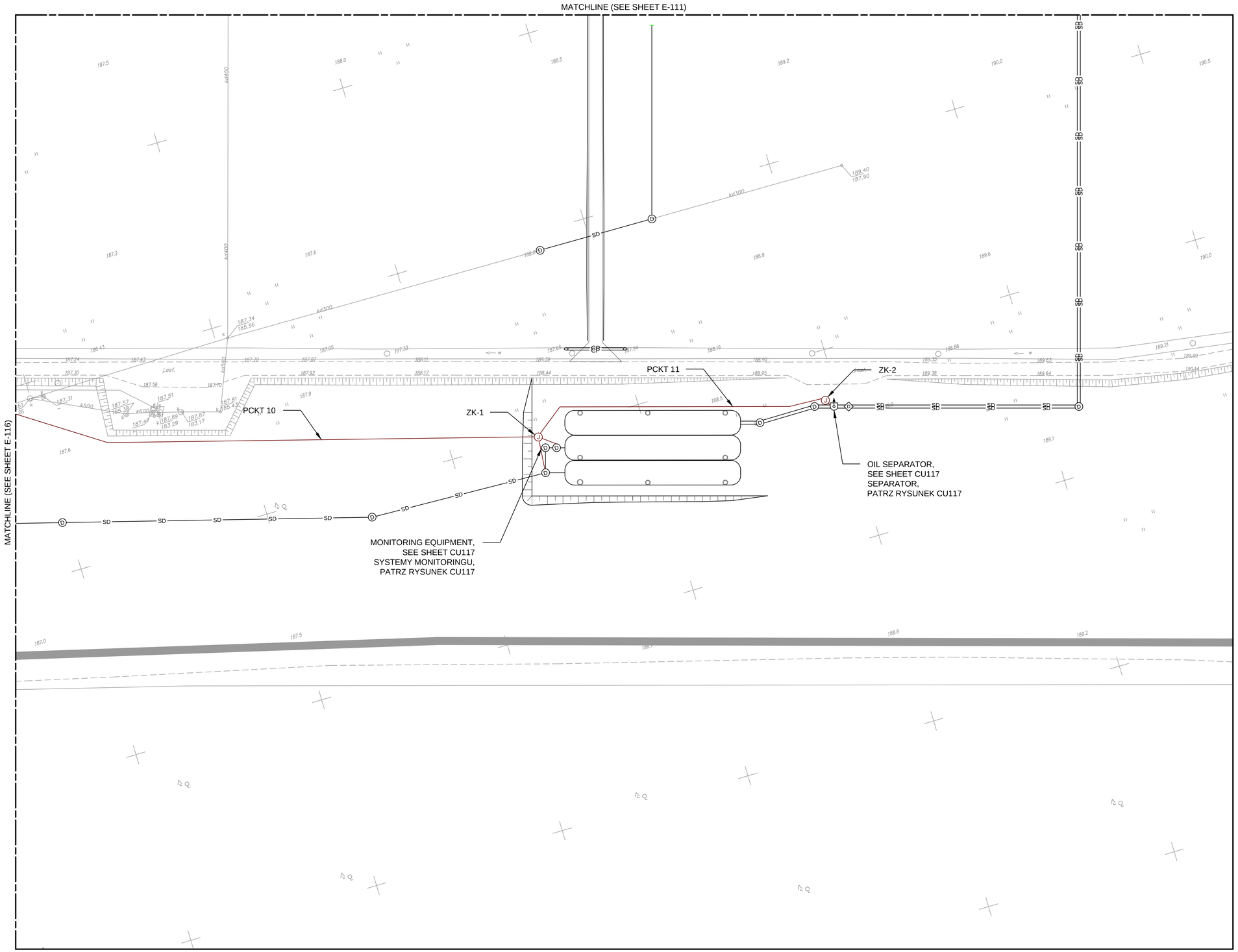

N

LEGEND:

- ELEC DUCTBANK / KANALIZACJA KABLOWA
- COMM ELEC & COMM DUCTBANK / KANALIZACJA KABLOWA
- REFER TO SHEETS E-535 TO E-537 FOR DUCTBANK SCHEDULE
- E ELEC SERIES CKT / OBWÓD SZEREGOWY
- TWO ELEC SERIES CKTS / DWA OBWODY SZEREGOWE
- E-1 (E) ELEC MANHOLE / STUDNIA ELE. (4 / E-520)
- J-1 (J) ELEC JUNCTION BOX / SKRZYNKA PRZYŁĄCZENIOWA (2 / E-510)
- EH-1 [E] ELEC HANDHOLE / STUDZIENKA ELE.
- 3-1 UNIDIR.THRESHOLD INSET LIGHT / JEDNOKIER. ZAGŁ. ŚWIATŁO PROGU
- 4-1 BIDIR. THRE&RWY END INSET LIGHT / DWUKIER. ZAGŁ. ŚWIATŁO PROGU I KOŃCA DS
- 5-1 BIDIR. RWY EDGE ELEVATED LIGHT / DWUKIER. NAZIEMNE ŚWIATŁO KRAW.DS
- 6-1 BIDIR. RWY EDGE SEMI FLUSH LIGHT / DWUKIER. ZAGŁĘBIONE ŚWIATŁO KRAWĘDZI DS
- 5-1 UNIDIR. OVRN EDGE ELEVATED LIGHT / NAZIEMNE ŚWIATŁO KRAW. WYBIEGU
- 21-1 OMNIDIR. TWY EDGE ELEVATED LIGHT / NAZIEMNE ŚWIATŁO KRAWĘDZI DK
- 22-1 OMNIDIR. TWY EDGE SEMI FLUSH LIGHT / ZAGŁĘBIONE ŚWIATŁO KRAWĘDZI DK
- 1-1 SEMI FLUSH APPROACH LIGHT / ZAGŁĘBIONE ŚWIATŁO PODEJŚCIA
- 2-1 SINGLE ELEVATED APPROACH LIGHT / POJEDYNCZE ŚWIATŁO PODEJŚCIA
- 1-1 APPROACH LIGHTS - ONE CROSSBAR / POPRZECZKA ŚWIATEŁ PODEJŚCIA
- 1-1 AREA LIGHT POLE / ŚWIATŁO NAZIEMNE
- IRDM, IACM, IGS SIGN / ZNACZNIK IRDM, IACM, IGS
- DUCTBANK SIMPLIFIED SECTION / UPROSZCZONY PRZEKRÓJ KANALIZACJI
- 1-1 CKT NUMBER - LIGHT NUMBER / NUMER OBWODU - NUMER OPRAWY
- 5A LIGHT BAR NUMBER / NUMER MASZTU
- P PAPI UNIT / JEDNOSTKA PAPI
- COMM COMM CKT / OBWÓD TELEKOM.
- T-1 (E) COMM MANHOLE / STUDNIA TELEKOM.
- T-5 [E] COMM HANDHOLE / STUDZIENKA TELEKOM.

E-126	E-127				
	E-122	E-123	E-124		
E-102	E-103	E-104	E-105	E-106	E-107
E-110	E-111				
E-116	E-117				

0 25
SCALE IN METERS

US Army Corps of Engineers®

MARK	DESCRIPTION	DATE

DESIGNED BY: K. LORENZ
DRAWN BY: M. STASIEWICZ
CHECKED BY: K. LEPERA
SUBMITTED BY: D. DIEHL
SIZE: ANSI D
ISSUE DATE: MARCH 2017
SOLICITATION NO.:
PROJECT NO.: PAYZ150024

U.S. ARMY CORPS OF ENGINEERS
KONRAD ADENAUER RING 39
WIESBADEN, D-65187 / GERMANY

AECOM INTERNATIONAL, INC.
SIEMENSSTRAGE 10
NEU-ISENBURG, 63263

ERI: IMPROVE SUPPORT INFRASTRUCTURE
ŁASK AB, POLAND

ELECTRICAL LIGHTING&POWER PLAN
PLAN SYTUACYJNY - OŚWIETLENIE I ZASILANIE

SHEET ID
E-117

C:\PWWORKING\AECOM_EU\LLAWICKA\D0159839\15-D-0008-0003EE-103.DWG
5/12/2016 LUCYNA.LAWICKA 1:500

100%

MATCHLINE (SEE SHEET E-127)

CONNECT DESIGNED LIGHTING CKT
INTO EXISTING OUTDOOR ELECTRICAL CABINET
PODŁĄCZYĆ PROJEKTOWANY OBWÓD OŚW.
W ISTNIEJĄCEJ SZAFIE KABLOWEJ

AF CKT

PCKT 9

TCKT1
TCKT2
TCKT3

DIRECTIONAL
DRILL

TCKT3

AF CKT

TCKT1
TCKT2

PCKT 7

PCKT 7

PCKT 9

AF-1
AF-2
AF-3
AF-4
AF-5

J-45
J-46
J-47
J-48

T-6
T-1
T-28

COMM

CONNECT WITH EXISTING LIGHTING CKT
POŁĄCZYĆ Z ISTNIEJĄCYM OBWODEM OŚW.

COLLISION NO. 2
FOR DETAILS SEE SHEET E-606

AF CKT

BAK ABSORBER

TCKT1

PCKT 9

PCKT 7

TCKT 2

SD

MATCHLINE (SEE SHEET E-123)

MATCHLINE (SEE SHEET E-103)

N

LEGEND:

- ELEC DUCTBANK — KANALIZACJA KABLOWA
- COMM ELEC & COMM DUCTBANK — KANALIZACJA KABLOWA
- REFER TO SHEETS E-535 TO E-537 FOR DUCTBANK SCHEDULE
- E ELEC SERIES CKT — OBWÓD SZEREGOWY
- E TWO ELEC SERIES CKTS — DWA OBWODY SZEREGOWE
- E-1 E ELEC MANHOLE — STUDNIA ELE. (4 / E-520)
- J-1 J ELEC JUNCTION BOX — SKRZYNKA PRZYŁĄCZENIOWA (2 / E-510)
- EH-1 E ELEC HANDHOLE — STUDZIENKA ELE.
- 3-1 UNIDIR.THRESHOLD INSET LIGHT — JEDNOKIER. ZAGŁ. ŚWIATŁO PROGU
- 4-1 BIDIR. THRE&RWY END INSET LIGHT — DWUKIER. ZAGŁ. ŚWIATŁO PROGU I KOŃCA DS
- 5-1 BIDIR. RWY EDGE ELEVATED LIGHT — DWUKIER. NAZIEMNE ŚWIATŁO KRAW.DS
- 6-1 BIDIR. RWY EDGE SEMI FLUSH LIGHT — DWUKIER. ZAGŁĘBIONE ŚWIATŁO KRAWĘDZI DS
- 5-1 UNIDIR. OVRN EDGE ELEVATED LIGHT — NAZIEMNE ŚWIATŁO KRAW. WYBIEGU
- 21-1 OMNIDIR. TWY EDGE ELEVATED LIGHT — NAZIEMNE ŚWIATŁO KRAWĘDZI DK
- 22-1 OMNIDIR. TWY EDGE SEMI FLUSH LIGHT — ZAGŁĘBIONE ŚWIATŁO KRAWĘDZI DK
- 1-1 SEMI FLUSH APPROACH LIGHT — ZAGŁĘBIONE ŚWIATŁO PODEJŚCIA
- 2-1 SINGLE ELEVATED APPROACH LIGHT — POJEDYNCZE ŚWIATŁO PODEJŚCIA
- 1-1 APPROACH LIGHTS - ONE CROSSBAR — POPRZECZKA ŚWIATEŁ PODEJŚCIA
- 1-1 AREA LIGHT POLE — ŚWIATŁO NAZIEMNE
- IRDM, IACM, IGS SIGN — ZNACZNIK IRDM, IACM, IGS
- DUCTBANK SIMPLIFIED SECTION — UPROSZCZONY PRZEKRÓJ KANALIZACJI
- 1-1 CKT NUMBER - LIGHT NUMBER — NUMER OBWODU - NUMER OPRAWY
- 5A LIGHT BAR NUMBER — NUMER MASZTU
- P PAPI UNIT — JEDNOSTKA PAPI
- COMM COMM CKT — OBWÓD TELEKOM.
- T-1 E COMM MANHOLE — STUDNIA TELEKOM.
- T-5 E COMM HANDHOLE — STUDZIENKA TELEKOM.

E-126	E-127				
	E-122	E-123	E-124		
E-102	E-103	E-104	E-105	E-106	E-107
E-110	E-111				
E-116	E-117				

0 25
SCALE IN METERS

US Army Corps of Engineers®

MARK	DESCRIPTION	DATE

DESIGNED BY: K. LOPEZ
DRAWN BY: M. STASIEWICZ
CHECKED BY: K. LEPERA
SUBMITTED BY: D. DIEHL
SIZE: ANSI D
ISSUE DATE: MARCH 2017
SOLICITATION NO.:
PROJECT NO.: PAY215002A

U.S. ARMY CORPS OF ENGINEERS
KONRAD ADENAUER RING 39
WIESBADEN, D-65187 / GERMANY

AECOM INTERNATIONAL, INC.
SIEMENSSTRAAE 10
NEU-ISENBURG, 63263

ERI: IMPROVE SUPPORT INFRASTRUCTURE
ŁASK AB, POLAND

ELECTRICAL LIGHTING&POWER PLAN
PLAN SYTUACYJNY - OŚWIETLENIE I ZASILANIE

SHEET ID
E-122

C:\PWWORKING\AECOM_EU\LLAWICKA\D0159839\15-D-0008-0003EE-103.DWG
5/12/2016 LUCYNA.LAWICKA 1:500

100%

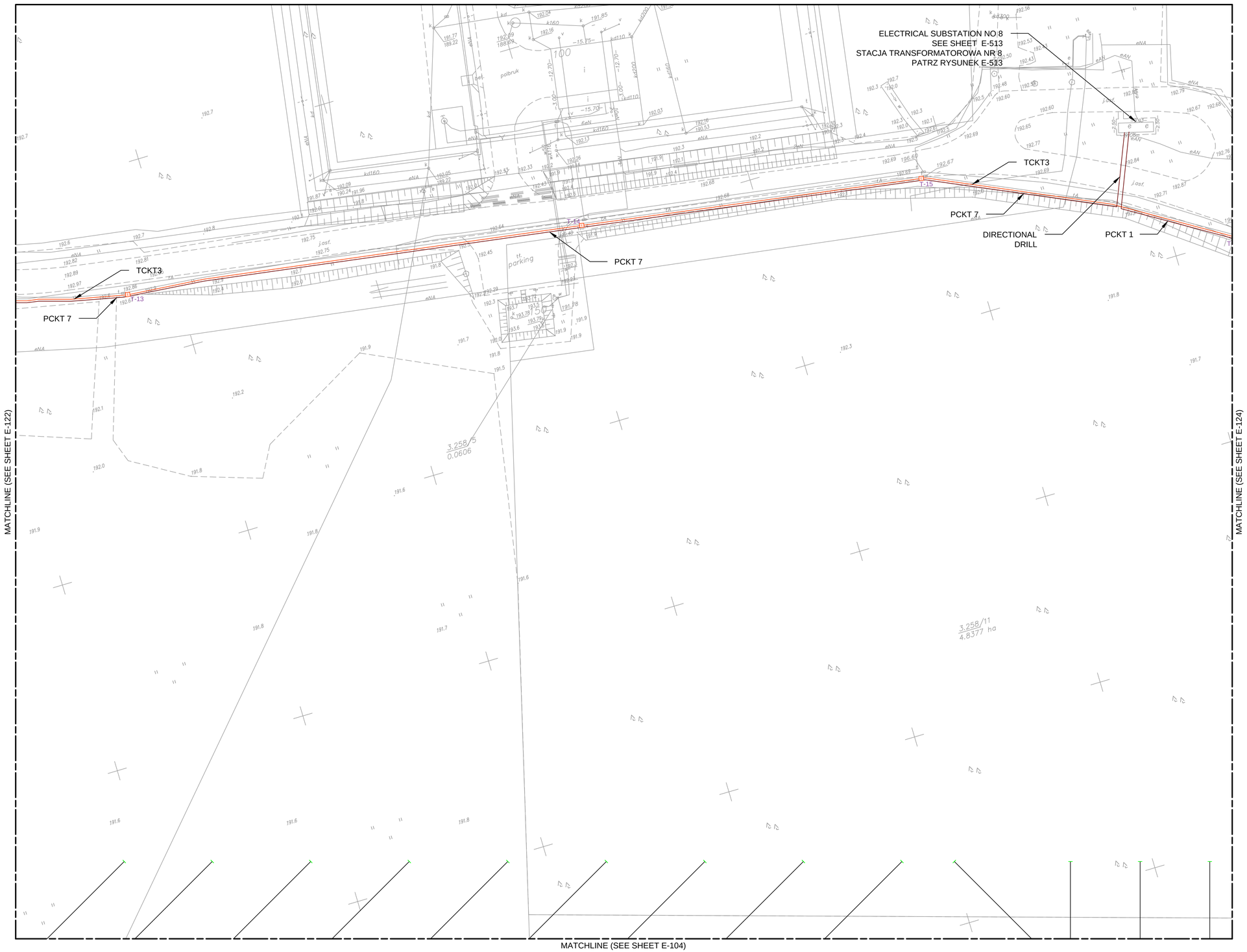

N

LEGEND:

- ELEC DUCTBANK / KANALIZACJA KABLOWA
- COMM ELEC & COMM DUCTBANK / KANALIZACJA KABLOWA
- REFER TO SHEETS E-535 TO E-537 FOR DUCTBANK SCHEDULE
- ELEC SERIES CKT / OBWÓD SZEREGOWY
- TWO ELEC SERIES CKTS / DWA OBWODY SZEREGOWE
- E-1 ELEC MANHOLE / STUDNIA ELE. (4 / E-520)
- J-1 ELEC JUNCTION BOX / SKRZYNKA PRZYŁĄCZENIOWA (2 / E-510)
- EH-1 ELEC HANDHOLE / STUDZIENKA ELE.
- 3-1 UNIDIR.THRESHOLD INSET LIGHT / JEDNOKIER. ZAGŁ. ŚWIATŁO PROGU
- 4-1 BIDIR. THRE&RWY END INSET LIGHT / DWUKIER. ZAGŁ. ŚWIATŁO PROGU I KOŃCA DS
- 5-1 BIDIR. RWY EDGE ELEVATED LIGHT / DWUKIER. NAZIEMNE ŚWIATŁO KRAW.DS
- 6-1 BIDIR. RWY EDGE SEMI FLUSH LIGHT / DWUKIER. ZAGŁĘBIONE ŚWIATŁO KRAWĘDZI DS
- 5-1 UNIDIR. OVRN EDGE ELEVATED LIGHT / NAZIEMNE ŚWIATŁO KRAW. WYBIEGU
- 21-1 OMNIDIR. TWY EDGE ELEVATED LIGHT / NAZIEMNE ŚWIATŁO KRAWĘDZI DK
- 22-1 OMNIDIR. TWY EDGE SEMI FLUSH LIGHT / ZAGŁĘBIONE ŚWIATŁO KRAWĘDZI DK
- 1-1 SEMI FLUSH APPROACH LIGHT / ZAGŁĘBIONE ŚWIATŁO PODEJŚCIA
- 2-1 SINGLE ELEVATED APPROACH LIGHT / POJEDYNCZE ŚWIATŁO PODEJŚCIA
- 1-1 APPROACH LIGHTS - ONE CROSSBAR / POPRZECZKA ŚWIATEŁ PODEJŚCIA
- 1-1 AREA LIGHT POLE / ŚWIATŁO NAZIEMNE
- IRDM, IACM, IGS SIGN / ZNACZNIK IRDM, IACM, IGS
- DUCTBANK SIMPLIFIED SECTION / UPROSZCZONY PRZEKRÓJ KANALIZACJI
- 1-1 CKT NUMBER - LIGHT NUMBER / NUMER OBWODU - NUMER OPRAWY
- 5A LIGHT BAR NUMBER / NUMER MASZTU
- P PAPI UNIT / JEDNOSTKA PAPI
- COMM COMM CKT / OBWÓD TELEKOM.
- T-1 COMM MANHOLE / STUDNIA TELEKOM.
- T-5 COMM HANDHOLE / STUDZIENKA TELEKOM.

E-126	E-127				
	E-122	E-123	E-124		
E-102	E-103	E-104	E-105	E-106	E-107
E-110	E-111				
E-116	E-117				

0 25
SCALE IN METERS

US Army Corps of Engineers®

MARK	DESCRIPTION	DATE

DESIGNED BY: K. LORENZ
DRAWN BY: M. STASIEWICZ
CHECKED BY: K. LEPERA
SUBMITTED BY: D. DIEHL
SIZE: ANSI D
ISSUE DATE: MARCH 2017
SOLICITATION NO.:
PROJECT NO.: PAYZ150024

U.S. ARMY CORPS OF ENGINEERS
KONRAD ADENAUER RING 39
WIESBADEN, D-65187 / GERMANY

AECOM INTERNATIONAL, INC.
SIEMENSSTRAGE 10
NEU-ISENBURG, 63263

ERI: IMPROVE SUPPORT INFRASTRUCTURE
ŁASK AB, POLAND

ELECTRICAL LIGHTING&POWER PLAN
PLAN SYTUACYJNY - OŚWIETLENIE I ZASILANIE

SHEET ID
E-123

C:\PWWORKING\AECOM_EU\LLAWICKA\D0159839\15-D-0008-0003EE-103.DWG
5/12/2016 LUCYNA.LAWICKA 1:500

100%

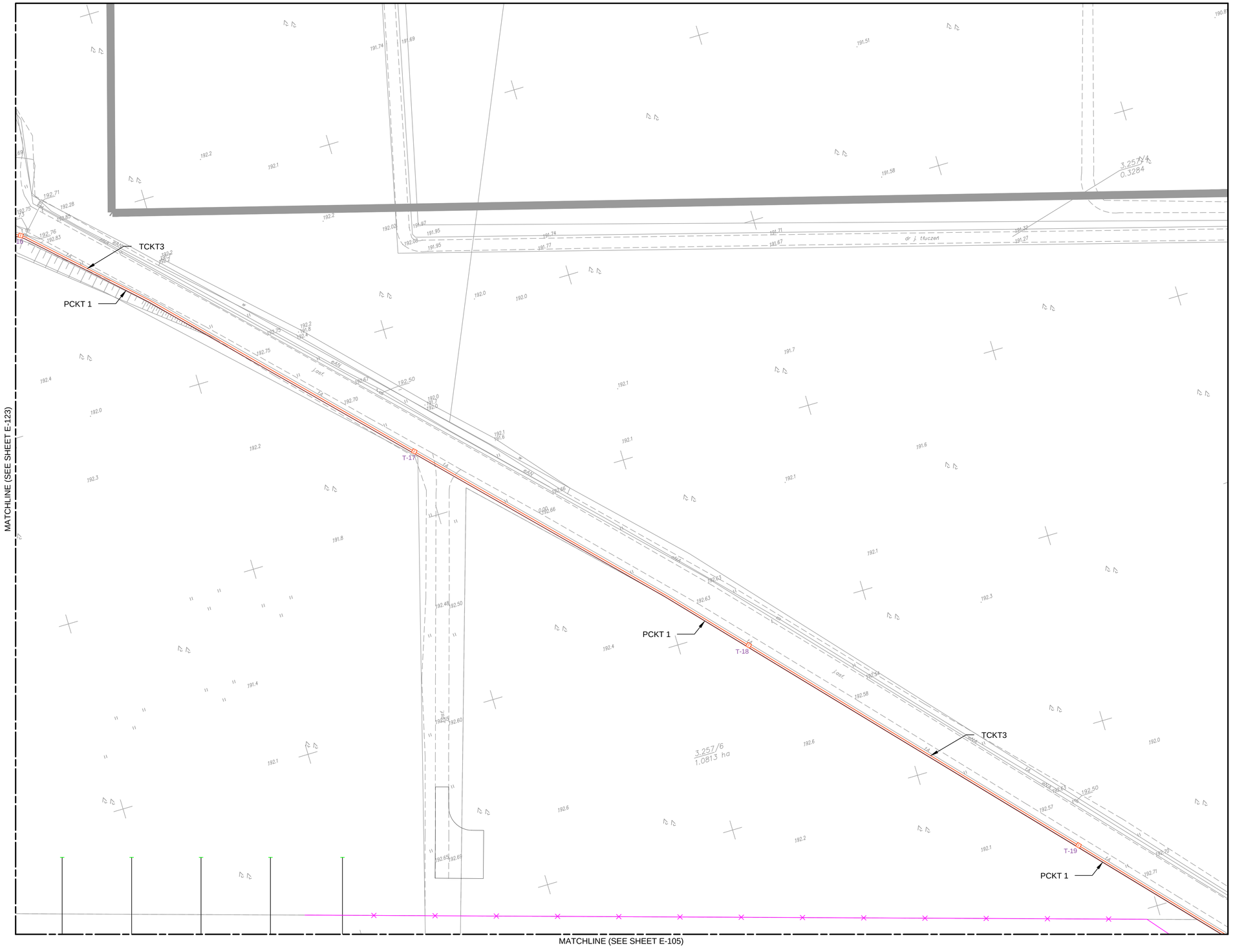

N

LEGEND:

- ELEC DUCTBANK — KANALIZACJA KABLOWA
- COMM ELEC & COMM DUCTBANK — KANALIZACJA KABLOWA
- REFER TO SHEETS E-535 TO E-537 FOR DUCTBANK SCHEDULE
- E — ELEC SERIES CKT — OBWÓD SZEREGOWY
- E — TWO ELEC SERIES CKTS — DWA OBWODY SZEREGOWE
- E-1 (E) — ELEC MANHOLE — STUDNIA ELE. (4 / E-520)
- J-1 (J) — ELEC JUNCTION BOX — SKRZYNKA PRZYŁĄCZENIOWA (2 / E-510)
- EH-1 [E] — ELEC HANDHOLE — STUDZIENKA ELE.
- 3-1 — UNIDIR.THRESHOLD INSET LIGHT — JEDNOKIER. ZAGŁ. ŚWIATŁO PROGU
- 4-1 — BIDIR. THRE&RWY END INSET LIGHT — DWUKIER. ZAGŁ. ŚWIATŁO PROGU I KOŃCA DS
- 5-1 — BIDIR. RWY EDGE ELEVATED LIGHT — DWUKIER. NAZIEMNE ŚWIATŁO KRAW.DS
- 6-1 — BIDIR. RWY EDGE SEMI FLUSH LIGHT — DWUKIER. ZAGŁĘBIONE ŚWIATŁO KRAWĘDZI DS
- 5-1 — UNIDIR. OVRN EDGE ELEVATED LIGHT — NAZIEMNE ŚWIATŁO KRAW. WYBIEGU
- 21-1 — OMNIDIR. TWY EDGE ELEVATED LIGHT — NAZIEMNE ŚWIATŁO KRAWĘDZI DK
- 22-1 — OMNIDIR. TWY EDGE SEMI FLUSH LIGHT — ZAGŁĘBIONE ŚWIATŁO KRAWĘDZI DK
- 1-1 — SEMI FLUSH APPROACH LIGHT — ZAGŁĘBIONE ŚWIATŁO PODEJŚCIA
- 2-1 — SINGLE ELEVATED APPROACH LIGHT — POJEDYNCZE ŚWIATŁO PODEJŚCIA
- 1-1 — APPROACH LIGHTS - ONE CROSSBAR — POPRZECZKA ŚWIATEŁ PODEJŚCIA
- 1-1 — AREA LIGHT POLE — ŚWIATŁO NAZIEMNE
- IRDM, IACM, IGS SIGN — ZNACZNIK IRDM, IACM, IGS
- DUCTBANK SIMPLIFIED SECTION — UPROSZCZONY PRZEKRÓJ KANALIZACJI
- 1-1 — CKT NUMBER - LIGHT NUMBER — NUMER OBWODU - NUMER OPRAWY
- 5A — LIGHT BAR NUMBER — NUMER MASZTU
- P — PAPI UNIT — JEDNOSTKA PAPI
- COMM — COMM CKT — OBWÓD TELEKOM.
- T-1 (E) — COMM MANHOLE — STUDNIA TELEKOM.
- T-5 [E] — COMM HANDHOLE — STUDZIENKA TELEKOM.

E-126	E-127				
	E-122	E-123	E-124		
E-102	E-103	E-104	E-105	E-106	E-107
E-110	E-111				
E-116	E-117				

0 — 25
SCALE IN METERS

US Army Corps of Engineers®

MARK	DESCRIPTION	DATE

ISSUE DATE: MARCH 2017
SOLICITATION NO.:
PROJECT NO.: PAYZ150024

DESIGNED BY: K. LORENZ
DRAWN BY: M. STASIEWICZ
CHECKED BY: K. LEPERA
SUBMITTED BY: D. DIEHL
SIZE: ANSI D

U.S. ARMY CORPS OF ENGINEERS
KONRAD ADENAUER RING 39
WIESBADEN, D-65187 / GERMANY

AECOM INTERNATIONAL, INC.
SIEMENSSTRAGE 10
NEU-ISENBURG, 63263

ERI: IMPROVE SUPPORT INFRASTRUCTURE
ŁASK AB, POLAND

ELECTRICAL LIGHTING&POWER PLAN
PLAN SYTUACYJNY - OŚWIETLENIE I ZASILANIE

SHEET ID
E-124

C:\PWWORKING\AECOM_EU\LLAWICKA\D0159839\15-D-0008-0003EE-103.DWG
5/12/2016 LUCYNA.LAWICKA 1:500

100%

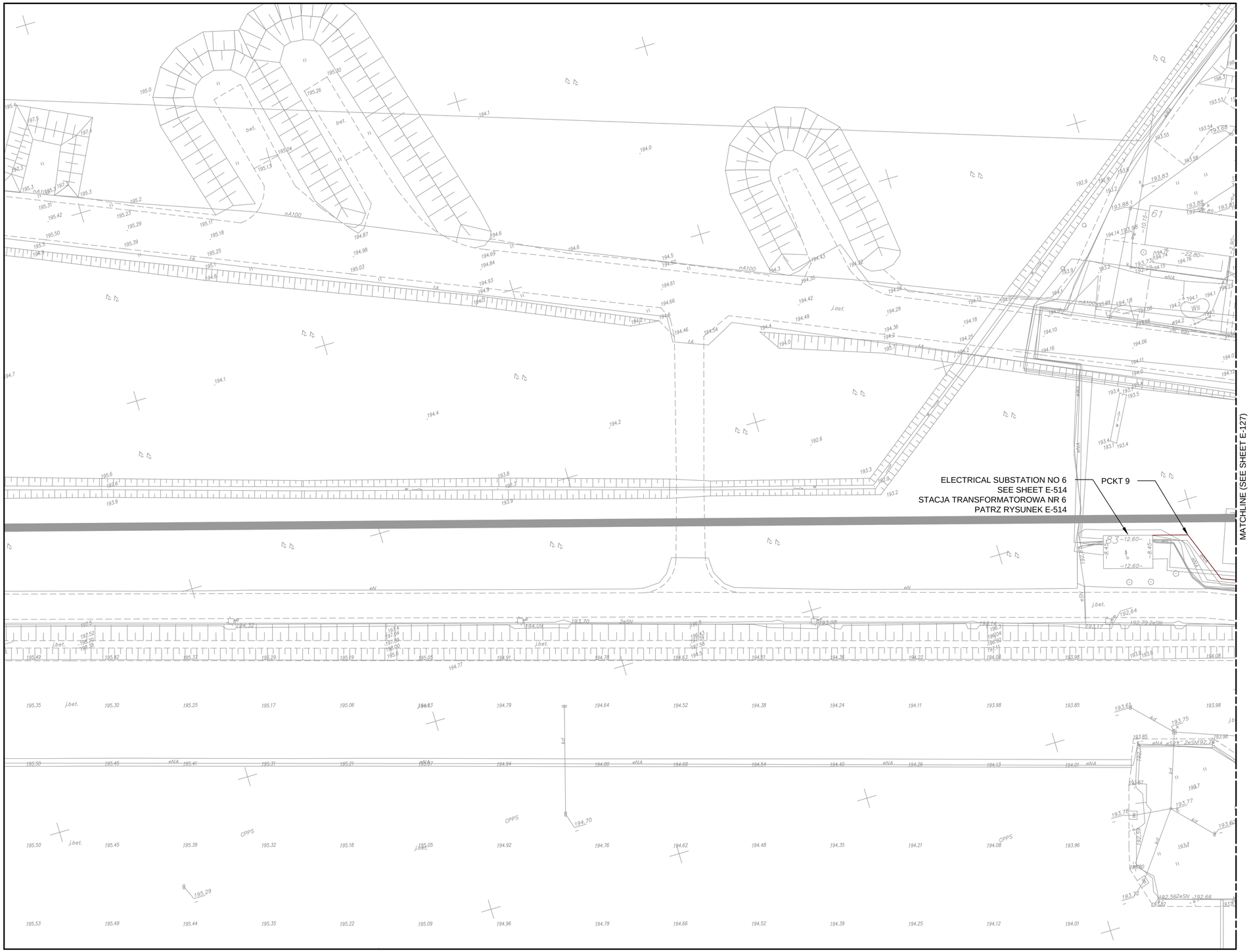

N

LEGEND:

- ELEC DUCTBANK / KANALIZACJA KABLOWA
- COMM ELEC & COMM DUCTBANK / KANALIZACJA KABLOWA
- REFER TO SHEETS E-535 TO E-537 FOR DUCTBANK SCHEDULE
- E ELEC SERIES CKT / OBWÓD SZEREGOWY
- TWO ELEC SERIES CKTS / DWA OBWODY SZEREGOWE
- E-1 (E) ELEC MANHOLE / STUDNIA ELE. (4 / E-520)
- J-1 (J) ELEC JUNCTION BOX / SKRZYNKA PRZYŁĄCZENIOWA (2 / E-510)
- EH-1 [E] ELEC HANDHOLE / STUDZIENKA ELE.
- 3-1 UNIDIR.THRESHOLD INSET LIGHT / JEDNOKIER. ZAGŁ. ŚWIATŁO PROGU
- 4-1 BIDIR. THRE&RWY END INSET LIGHT / DWUKIER. ZAGŁ. ŚWIATŁO PROGU I KOŃCA DS
- 5-1 BIDIR. RWY EDGE ELEVATED LIGHT / DWUKIER. NAZIEMNE ŚWIATŁO KRAW.DS
- 6-1 BIDIR. RWY EDGE SEMI FLUSH LIGHT / DWUKIER. ZAGŁĘBIONE ŚWIATŁO KRAWĘDZI DS
- 5-1 UNIDIR. OVRN EDGE ELEVATED LIGHT / NAZIEMNE ŚWIATŁO KRAW. WYBIEGU
- 21-1 OMNIDIR. TWY EDGE ELEVATED LIGHT / NAZIEMNE ŚWIATŁO KRAWĘDZI DK
- 22-1 OMNIDIR. TWY EDGE SEMI FLUSH LIGHT / ZAGŁĘBIONE ŚWIATŁO KRAWĘDZI DK
- 1-1 SEMI FLUSH APPROACH LIGHT / ZAGŁĘBIONE ŚWIATŁO PODEJŚCIA
- 2-1 SINGLE ELEVATED APPROACH LIGHT / POJEDYNCZE ŚWIATŁO PODEJŚCIA
- 1-1 APPROACH LIGHTS - ONE CROSSBAR / POPRZECZKA ŚWIATEŁ PODEJŚCIA
- 1-1 AREA LIGHT POLE / ŚWIATŁO NAZIEMNE
- IRDM, IACM, IGS SIGN / ZNACZNIK IRDM, IACM, IGS
- DUCTBANK SIMPLIFIED SECTION / UPROSZCZONY PRZEKRÓJ KANALIZACJI
- 1-1 CKT NUMBER - LIGHT NUMBER / NUMER OBWODU - NUMER OPRAWY
- 5A LIGHT BAR NUMBER / NUMER MASZTU
- P PAPI UNIT / JEDNOSTKA PAPI
- COMM COMM CKT / OBWÓD TELEKOM.
- T-1 (E) COMM MANHOLE / STUDNIA TELEKOM.
- T-5 [E] COMM HANDHOLE / STUDZIENKA TELEKOM.

E-126	E-127				
	E-122	E-123	E-124		
E-102	E-103	E-104	E-105	E-106	E-107
E-110	E-111				
E-116	E-117				

0 25
SCALE IN METERS

US Army Corps of Engineers®

MARK	DESCRIPTION	DATE

DESIGNED BY: K. LORENZ
DRAWN BY: M. STASIEWICZ
CHECKED BY: K. LEPERA
SUBMITTED BY: D. ZIEHL
SCALE: ANSI D

ISSUE DATE: MARCH 2017
SOLICITATION NO.:
PROJECT NO.: PAYZ150024

U.S. ARMY CORPS OF ENGINEERS
KONRAD ADENAUER RING 39
WIESBADEN, D-65187 / GERMANY

AECOM INTERNATIONAL, INC.
SIEMENSSTRABE 10
NEU-ISENBURG, 63263

ERI: IMPROVE SUPPORT INFRASTRUCTURE
ŁASK AB, POLAND

ELECTRICAL LIGHTING&POWER PLAN
PLAN SYTUACYJNY - OŚWIETLENIE I ZASILANIE

SHEET ID
E-126

C:\PWWORKING\AECOM_EU\LLAWICKA\D0159839\15-D-0008-0003EE-103.DWG
5/12/2016 LUCYNA.LAWICKA 1:500

100%

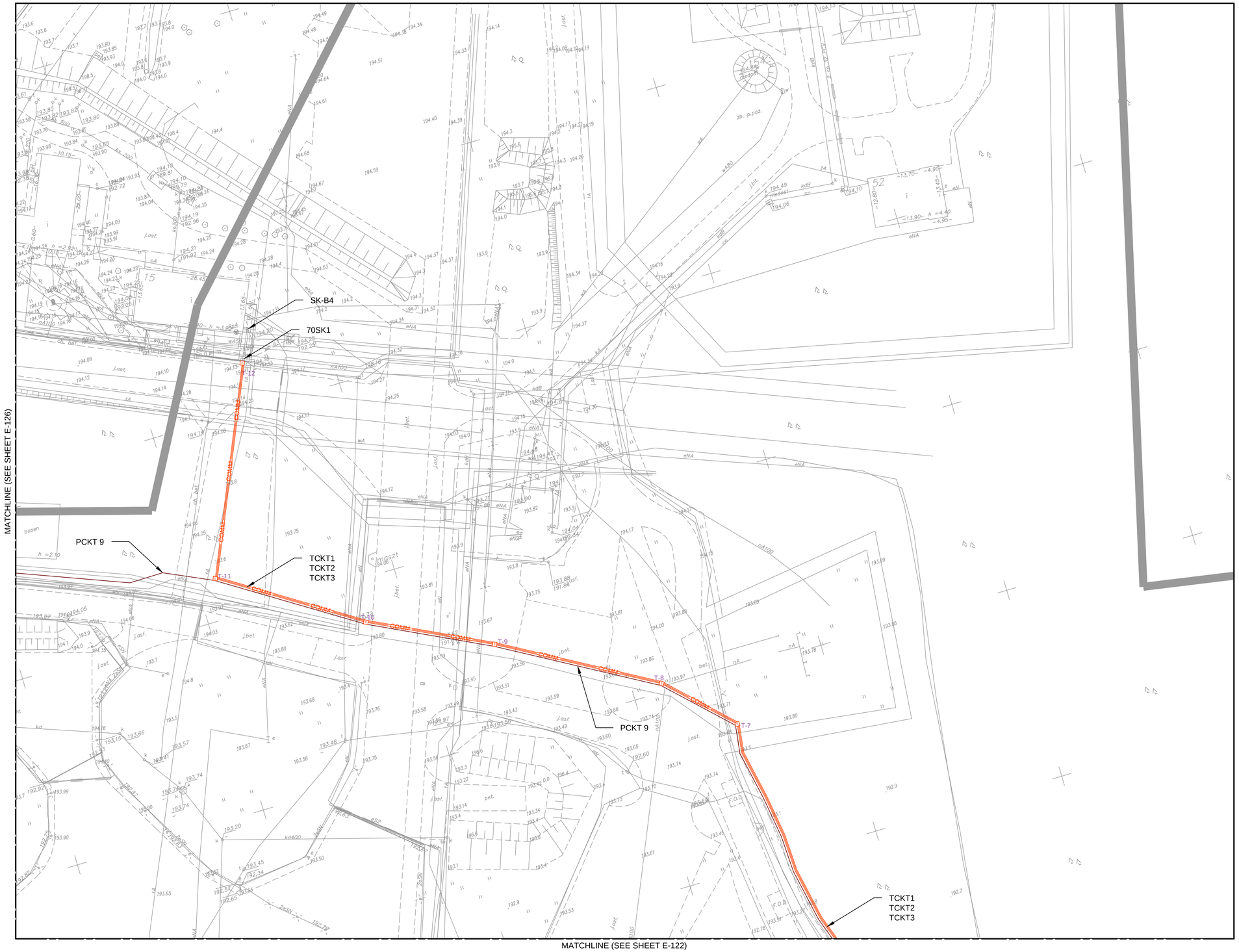

N

LEGEND:

- ELEC DUCTBANK / KANALIZACJA KABLOWA
- COMM ELEC & COMM DUCTBANK / KANALIZACJA KABLOWA
- REFER TO SHEETS E-535 TO E-537 FOR DUCTBANK SCHEDULE
- E ELEC SERIES CKT / OBWÓD SZEREGOWY
- TWO ELEC SERIES CKTS / DWA OBWODY SZEREGOWE
- E-1 (E) ELEC MANHOLE / STUDNIA ELE. (4 / E-520)
- J-1 (J) ELEC JUNCTION BOX / SKRZYNKA PRZYŁĄCZENIOWA (2 / E-510)
- EH-1 [E] ELEC HANDHOLE / STUDZIENKA ELE.
- 3-1 UNIDIR.THRESHOLD INSET LIGHT / JEDNOKIER. ZAGŁ. ŚWIATŁO PROGU
- 4-1 BIDIR. THRE&RWY END INSET LIGHT / DWUKIER. ZAGŁ. ŚWIATŁO PROGU I KOŃCA DS
- 5-1 BIDIR. RWY EDGE ELEVATED LIGHT / DWUKIER. NAZIEMNE ŚWIATŁO KRAW.DS
- 6-1 BIDIR. RWY EDGE SEMI FLUSH LIGHT / DWUKIER. ZAGŁĘBIONE ŚWIATŁO KRAWĘDZI DS
- 5-1 UNIDIR. OVRN EDGE ELEVATED LIGHT / NAZIEMNE ŚWIATŁO KRAW. WYBIEGU
- 21-1 OMNIDIR. TWY EDGE ELEVATED LIGHT / NAZIEMNE ŚWIATŁO KRAWĘDZI DK
- 22-1 OMNIDIR. TWY EDGE SEMI FLUSH LIGHT / ZAGŁĘBIONE ŚWIATŁO KRAWĘDZI DK
- 1-1 SEMI FLUSH APPROACH LIGHT / ZAGŁĘBIONE ŚWIATŁO PODEJŚCIA
- 2-1 SINGLE ELEVATED APPROACH LIGHT / POJEDYNCZE ŚWIATŁO PODEJŚCIA
- 1-1 APPROACH LIGHTS - ONE CROSSBAR / POPRZECZKA ŚWIATEŁ PODEJŚCIA
- 1-1 AREA LIGHT POLE / ŚWIATŁO NAZIEMNE
- IRDM, IACM, IGS SIGN / ZNACZNIK IRDM, IACM, IGS
- DUCTBANK SIMPLIFIED SECTION / UPROSZCZONY PRZEKRÓJ KANALIZACJI
- 1-1 CKT NUMBER - LIGHT NUMBER / NUMER OBWODU - NUMER OPRAWY
- 5A LIGHT BAR NUMBER / NUMER MASZTU
- P PAPI UNIT / JEDNOSTKA PAPI
- COMM COMM CKT / OBWÓD TELEKOM.
- T-1 (E) COMM MANHOLE / STUDNIA TELEKOM.
- T-5 [E] COMM HANDHOLE / STUDZIENKA TELEKOM.

E-126	E-127				
	E-122	E-123	E-124		
E-102	E-103	E-104	E-105	E-106	E-107
E-110	E-111				
E-116	E-117				

0 25
SCALE IN METERS

US Army Corps of Engineers®

MARK	DESCRIPTION	DATE

ISSUE DATE: MARCH 2017
SOLICITATION NO.:
PROJECT NO.: PAYZ15002A

DESIGNED BY: K. LORENZ
DRAWN BY: M. STASIEWICZ
CHECKED BY: K. LEPERA
SUBMITTED BY: D. ZIEHL
SIZE: ANSI D

U.S. ARMY CORPS OF ENGINEERS
KONRAD ADENAUER RING 39
WIESBADEN, D-65187 / GERMANY

AECOM INTERNATIONAL, INC.
SIEMENSSTRASE 10
NEU-ISENBURG, 63263

ERI: IMPROVE SUPPORT INFRASTRUCTURE
ŁASK AB, POLAND

ELECTRICAL LIGHTING&POWER PLAN
PLAN SYTUACYJNY - OŚWIETLENIE I ZASILANIE

SHEET ID
E-127

C:\PWWORKING\AECOM_EU\LLAWICKA\D0159839\15-D-0008-0003EE-103.DWG
5/12/2016 LUCYNA.LAWICKA 1:500

100%

ELECTRICAL POWER & TELECOMMUNICATION CIRCUITS - SCHEDULE

POWER SUPPLY CIRCUITS												
OBWODY ZASILAJĄCE												
CKT NO.	FROM	TO	CABLE DITCH	CABLE SECTION IN DUCT BANK	CABLE SECTION IN PIPE	RESERVE PIPE	CABLE SECTION IN PIPE	RESERVE PIPE	PROTECTIVE PIPE	PROTECTIVE PIPE	CABLE LENGTH	CABLE TYPE
OBW. NR	OD	DO	WYKOP	ODCINEK KABLA W KANALIZACJI	ODCINEK KABLA W RURZE OSŁONOWEJ	RURA REZERWOWA	ODCINEK KABLA W RURZE OSŁONOWEJ	RURA REZERWOWA	RURA OSŁONOWA	RURA OSŁONOWA	DŁUGOŚĆ KABLA	TYP KABLA
			[M]	[M]	RHDPE(110)	RHDPE(110)	RHDPE(160)	RHDPE(160)	HDPE(110)	HDPE(160)	[M]	
PCKT1	station no. 8	ZK1	592	300	25	25			2		990	YKY 4x120
PCKT2	ZK1	ZK FFM	3								5	YKY 3x35
PCKT3	ZK1	ZK Celiometr	17								25	YKY 4x10
PCKT4	ZK1	ZK2	6	130							155	YKY 4x120
PCKT5	ZK2	ZK NDB	3								5	YKY 4x50
PCKT6	ZK2	ZK MM	11								25	YKY 4x10
PCKT7	station no. 8	ZK	769	138	46	46			18		1010	YKY 4x120
PCKT8	ZK	ZK AWOS	3								5	YKY 4x10
PCKT9	station no. 6	ZK BAK	556				66	66		32	620	YKY 4x300
PCKT10	RnN "Krasula"	ZK1 PV	620		11	11			6		680	YAKY 4x25
PCKT11	ZK1 PV	ZK2 MS	81								90	YAKY 3x10

TELECOMMUNICATION CIRCUITS								
OBWODY TELEKOMUNIKACYJNE								
CKT NO.	FROM	TO	CABLE DITCH	CABLE SECTION IN DUCT BANK	CABLE SECTION IN PIPE	PROTECTIVE PIPE	CABLE LENGTH	CABLE TYPE
OBW. NR	OD	DO	WYKOP	ODCINEK KABLA W KANALIZACJI	ODCINEK KABLA W RURZE OSŁONOWEJ	RURA OSŁONOWA	DŁUGOŚĆ KABLA	TYP KABLA
			[M]	[M]	RHDPE(110)	HDPE(110)	[M]	
TCKT1	SK-B4	BAK-14	546		194	26	4000	XzTKMXpw2x2x0,8
TCKT2	SK-B4	AWOS	718	138	194	30	945	XzTKMXpw4x2x0,8
TCKT3	SK-B4	T-25	1272	431	286	20	1732	XzTKMXpw20x2x0,8
TCKT4	T-25	FFM	3				5	XzTKMXpw4x2x0,8
TCKT5	T-25	Ceilometer	20				25	XzTKMXpw4x2x0,8
TCKT6	T-25	T-27		130			145	XzTKMXpw8x2x0,8
TCKT7	T-27	NDB	3				5	XzTKMXpw4x2x0,8
TCKT8	T-27	MM	15				20	XzTKMXpw4x2x0,8

CABLE SIZE: METRIC CROSS SECTIONAL AREA

CABLE SIZE: METRIC CROSS SECTIONAL AREA		
SZEREG AWG I ODPOWIEDNIKI METRYCZNE		
CABLE SIZE (AWG)	EQUIVALENT SIZE (MM2)	STANDARD INT'L SIZE (MM2)
6	13.3	10
5	16.8	16
4	21.1	25
3	26.7	25
2	33.6	35
1	42.4	50
1/0	53.5	50
2/0	67.4	70
3/0	85.0	95
4/0	107.2	120

US Army Corps of Engineers®

MARK	DESCRIPTION	DATE

ISSUE DATE: MARCH 2017
SOLICITATION NO.:
PROJECT NO.: PAY215002A

DESIGNED BY: K. LOPEZ
DRAWN BY: L. ŁAWICKA
CHECKED BY: K. LEPERA
SUBMITTED BY: D. DIEHL
SIZE: ANSI D

U.S. ARMY CORPS OF ENGINEERS
KONRAD ADENAUER RING 39
WIESBADEN, D-65187 / GERMANY

AECOM INTERNATIONAL, INC.
SIEMENSSTRAAE 10
NEU-ISENBURG, 63263

ERI: IMPROVE SUPPORT INFRASTRUCTURE
ŁASK AB, POLAND

ELECTRICAL POWER & TELECOMMUNICATION CIRCUITS - SCHEDULE
OBW. ZASILAJĄCE I TELEKOMUNIKACJNE - ZEST.

SHEET ID
E-128

C:\PWWORKING\AECOM_EU\LLAWICKA\D0159839\15-D-0008-0003EEA507.DWG
5/13/2016 LUCYNA.LAWICKA SCALE: NTS

100%

RUNWAY 10/28 PLAN

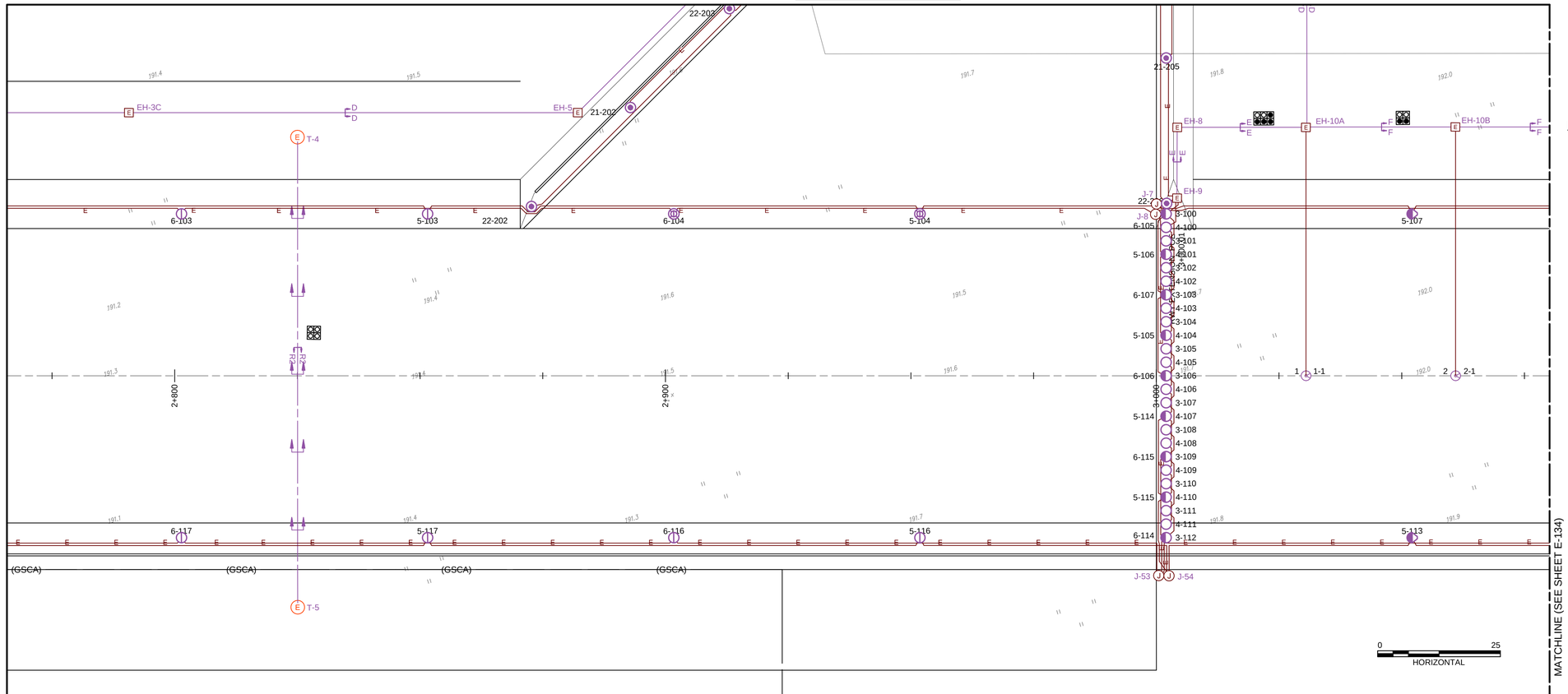

LEGEND:

- ELEC SERIES CKT — OBWÓD SZEREGOWY
- TWO ELEC SERIES CKTS — DWA OBWODY SZEREGOWE
- ELEC MANHOLE — STUDNIA ELE. (4 / E-520)
- ELEC JUNCTION BOX — SKRZYNKA PRZYŁĄCZENIOWA (2 / E-510)
- ELEC HANDHOLE — STUDZIENKA ELE.
- UNIDIR.THRESHOLD INSET LIGHT — JEDNOKIER. ZAGŁĘBIONE ŚWIATŁO PROGU
- BIDIR. THRESHOLD&RWY END INSET LIGHT — DWUKIER. ZAGŁĘBIONE ŚWIATŁO PROGU I KOŃCA DS
- BIDIR. RWY EDGE ELEVATED LIGHT — DWUKIER. NAZIEMNE ŚWIATŁO KRAWĘDZI DS
- BIDIR. RWY EDGE SEMI FLUSH LIGHT — DWUKIER. ZAGŁĘBIONE ŚWIATŁO KRAWĘDZI DS
- UNIDIR. OVERRUN EDGE ELEVATED LIGHT — NAZIEMNE ŚWIATŁO KRAWĘDZI WYBIEGU
- OMNIDIR. TWY EDGE ELEVATED LIGHT — NAZIEMNE ŚWIATŁO KRAWĘDZI DK
- OMNIDIR. TWY EDGE SEMI FLUSH LIGHT — ZAGŁĘBIONE ŚWIATŁO KRAWĘDZI DK
- SEMI FLUSH APPROACH LIGHT — ZAGŁĘBIONE ŚWIATŁO PODEJŚCIA
- SINGLE APPROACH LIGHT — POJEDYNCZE ŚWIATŁO PODEJŚCIA
- APPROACH LIGHTS - ONE CROSSBAR — POPRZECZKA ŚWIATEŁ PODEJŚCIA
- AREA LIGHT POLE — ŚWIATŁO NAZIEMNE
- 1-1 CKT NUMBER - LIGHT NUMBER — NUMER OBWODU - NUMER OPRAWY
- 5A LIGHT BAR NUMBER — NUMER MASZTU

RUNWAY 10/28 CENTERLINE PROFILE

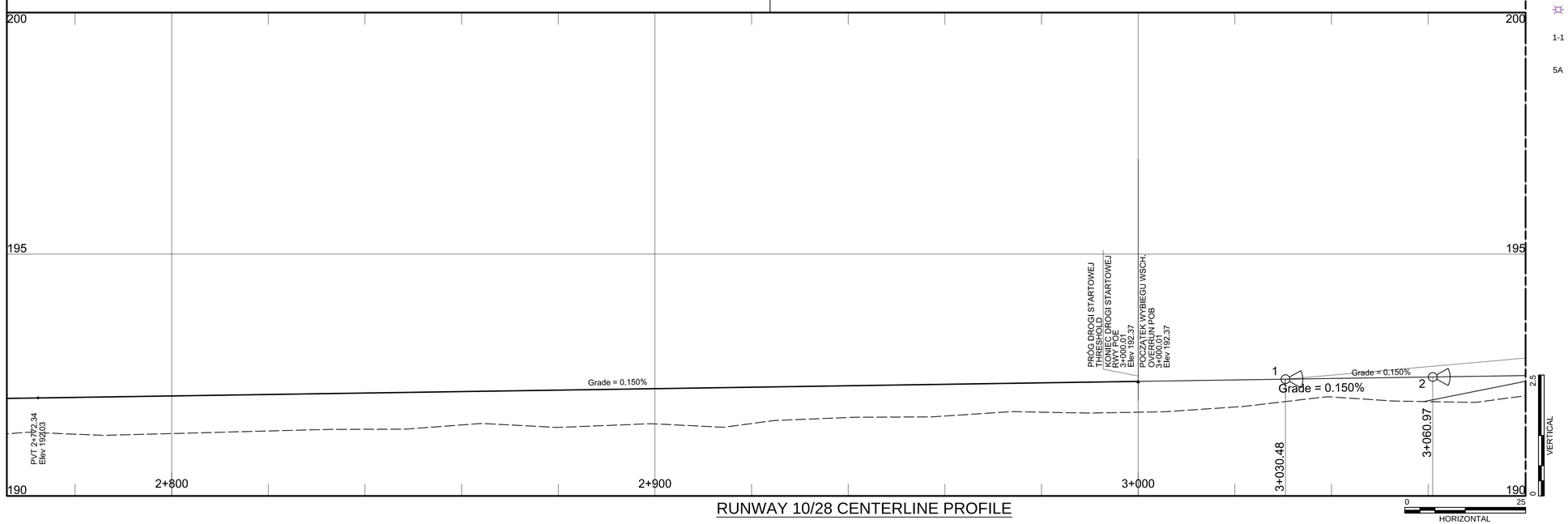

E-133	E-134	E-135	E-136

US Army Corps of Engineers®

MARK	DESCRIPTION	DATE

ISSUE DATE: MARCH 2017
SOLICITATION NO.:
PROJECT NO.: PAY215002A

DESIGNED BY: K. LORENZ
DRAWN BY: M. STASIEWICZ
CHECKED BY: K. LEPERA
SUBMITTED BY: D. DIEHL
SIZE: ANSI D

U.S. ARMY CORPS OF ENGINEERS
KONRAD ADENAUER RING 39
WIESBADEN, D-65187 / GERMANY

AECOM INTERNATIONAL, INC.
SIEMENSSTRAGE 10
NEU-ISENBURG, 63263

ERI: IMPROVE SUPPORT INFRASTRUCTURE
ŁASK AB, POLAND

RUNWAY 28 CALVERT SYSTEM, PLAN AND PROFILE
DS 10/28 PLAN I PROFIL ŚWIATEŁ PODEJŚCIA

SHEET ID
E-133

C:\PWWORKING\AECOM_EU\LLAWICKA\D0159839\15-D-0008-0003EEA201.DWG
5/13/2016 LUCYNA.LAWICKA 1:500 & 1:50/500

100%

RUNWAY 10/28 PLAN

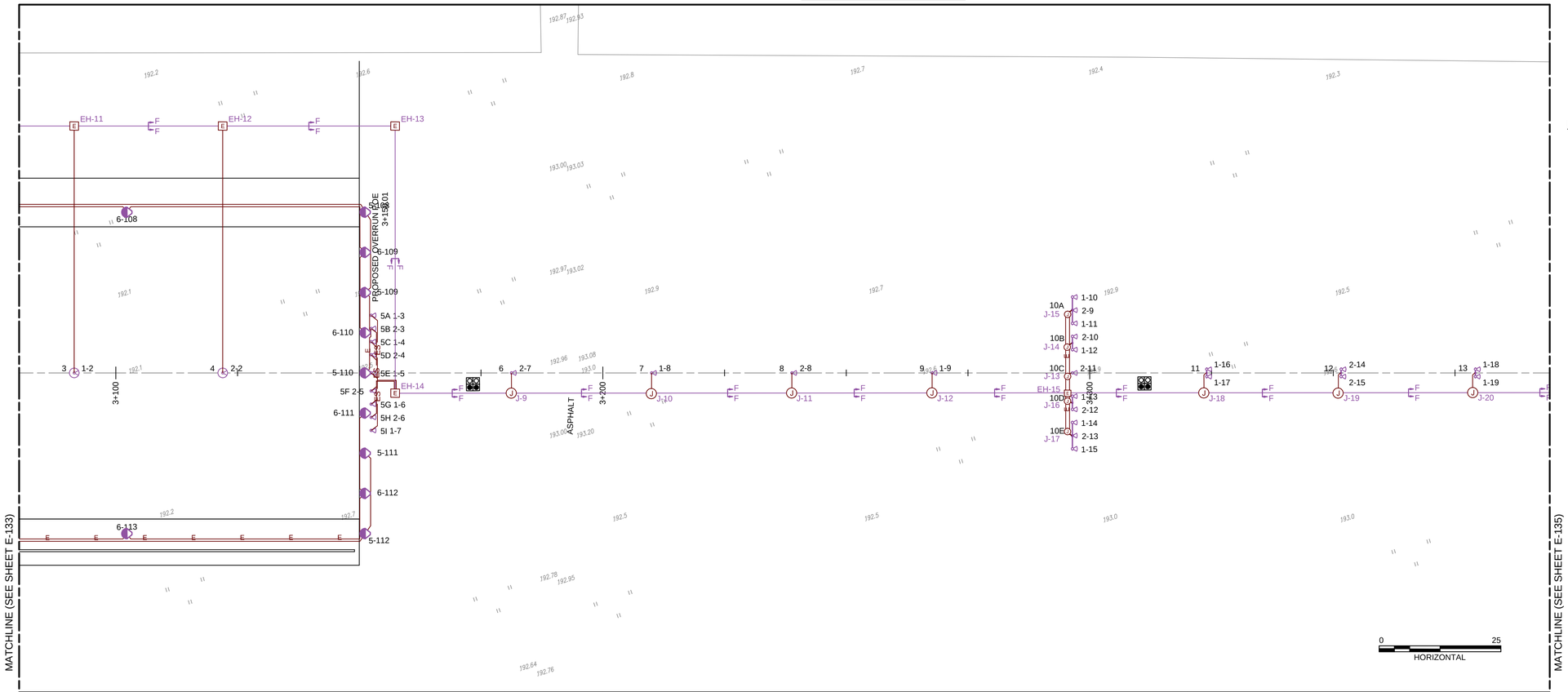

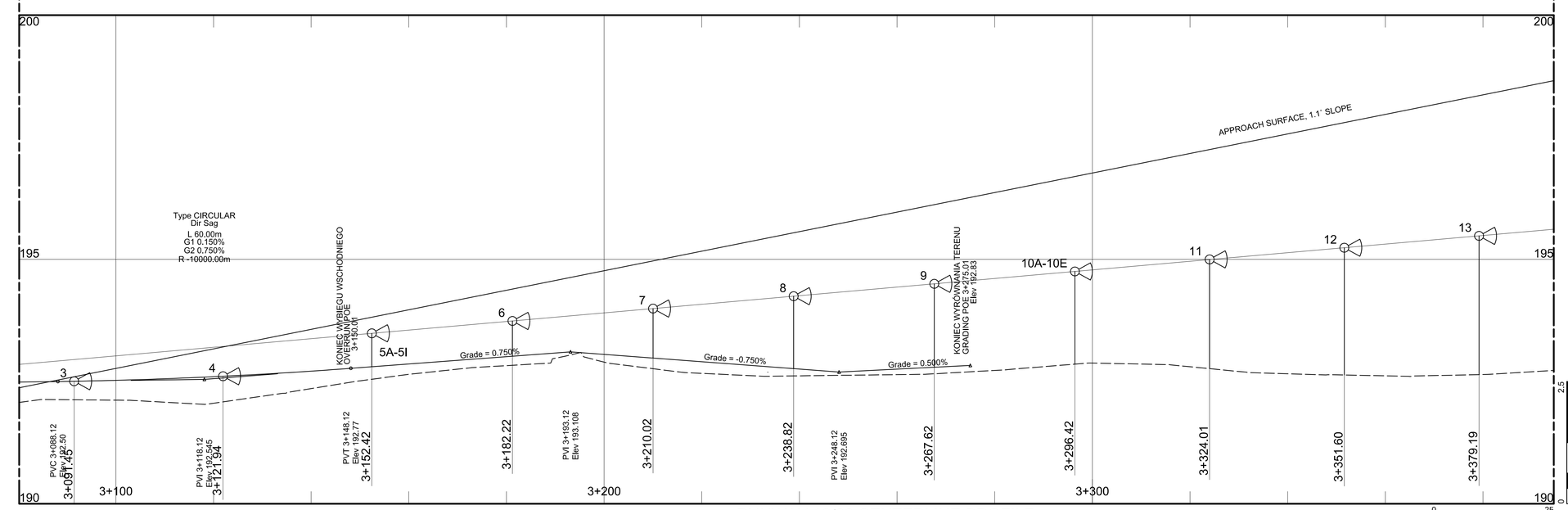

RUNWAY 10/28 CENTERLINE PROFILE

LEGEND:

- ELEC SERIES CKT — OBWÓD SZEREGOWY
- TWO ELEC SERIES CKTS — DWA OBWODY SZEREGOWE
- ELEC MANHOLE — STUDNIA ELE. (4 / E-520)
- ELEC JUNCTION BOX — SKRZYNKA PRZYŁĄCZENIOWA (2 / E-510)
- ELEC HANDHOLE — STUDZIENKA ELE.
- UNIDIR.THRESHOLD INSET LIGHT — JEDNOKIER. ZAGŁĘBIONE ŚWIATŁO PROGU
- BIDIR. THRESHOLD&RWY END INSET LIGHT — DWUKIER. ZAGŁĘBIONE ŚWIATŁO PROGU I KOŃCA DS
- BIDIR. RWY EDGE ELEVATED LIGHT — DWUKIER. NAZIEMNE ŚWIATŁO KRAWĘDZI DS
- BIDIR. RWY EDGE SEMI FLUSH LIGHT — DWUKIER. ZAGŁĘBIONE ŚWIATŁO KRAWĘDZI DS
- UNIDIR. OVERRUN EDGE ELEVATED LIGHT — NAZIEMNE ŚWIATŁO KRAWĘDZI WYBIEGU
- OMNIDIR. TWY EDGE ELEVATED LIGHT — NAZIEMNE ŚWIATŁO KRAWĘDZI DK
- OMNIDIR. TWY EDGE SEMI FLUSH LIGHT — ZAGŁĘBIONE ŚWIATŁO KRAWĘDZI DK
- SEMI FLUSH APPROACH LIGHT — ZAGŁĘBIONE ŚWIATŁO PODEJŚCIA
- SINGLE APPROACH LIGHT — POJEDYNCZE ŚWIATŁO PODEJŚCIA
- APPROACH LIGHTS - ONE CROSSBAR — POPRZECZKA ŚWIATEŁ PODEJŚCIA
- AREA LIGHT POLE — ŚWIATŁO NAZIEMNE
- 1-1 CKT NUMBER - LIGHT NUMBER — NUMER OBWODU - NUMER OPRAWY
- 5A LIGHT BAR NUMBER — NUMER MASZTU

US Army Corps of Engineers®

MARK	DESCRIPTION	DATE

DESIGNED BY: K. LORENZ
DRAWN BY: M. STASIEWICZ
CHECKED BY: K. LEPERA
SUBMITTED BY: D. DIEHL
SIZE: ANSI D
ISSUE DATE: MARCH 2017
SOLICITATION NO.:
PROJECT NO.: PAY215002A

U.S. ARMY CORPS OF ENGINEERS
KONRAD ADENAUER RING 39
WIESBADEN, D-65187 / GERMANY

AECOM INTERNATIONAL, INC.
SIEMENSSTRAE 10
NEU-ISENBURG, 63263

ERI: IMPROVE SUPPORT INFRASTRUCTURE
LASK AB, POLAND

RUNWAY 28 CALVERT SYSTEM, PLAN AND PROFILE
DS 10/28 PLAN I PROFIL ŚWIATEŁ PODEJŚCIA

SHEET ID
E-134

RUNWAY 10/28 PLAN

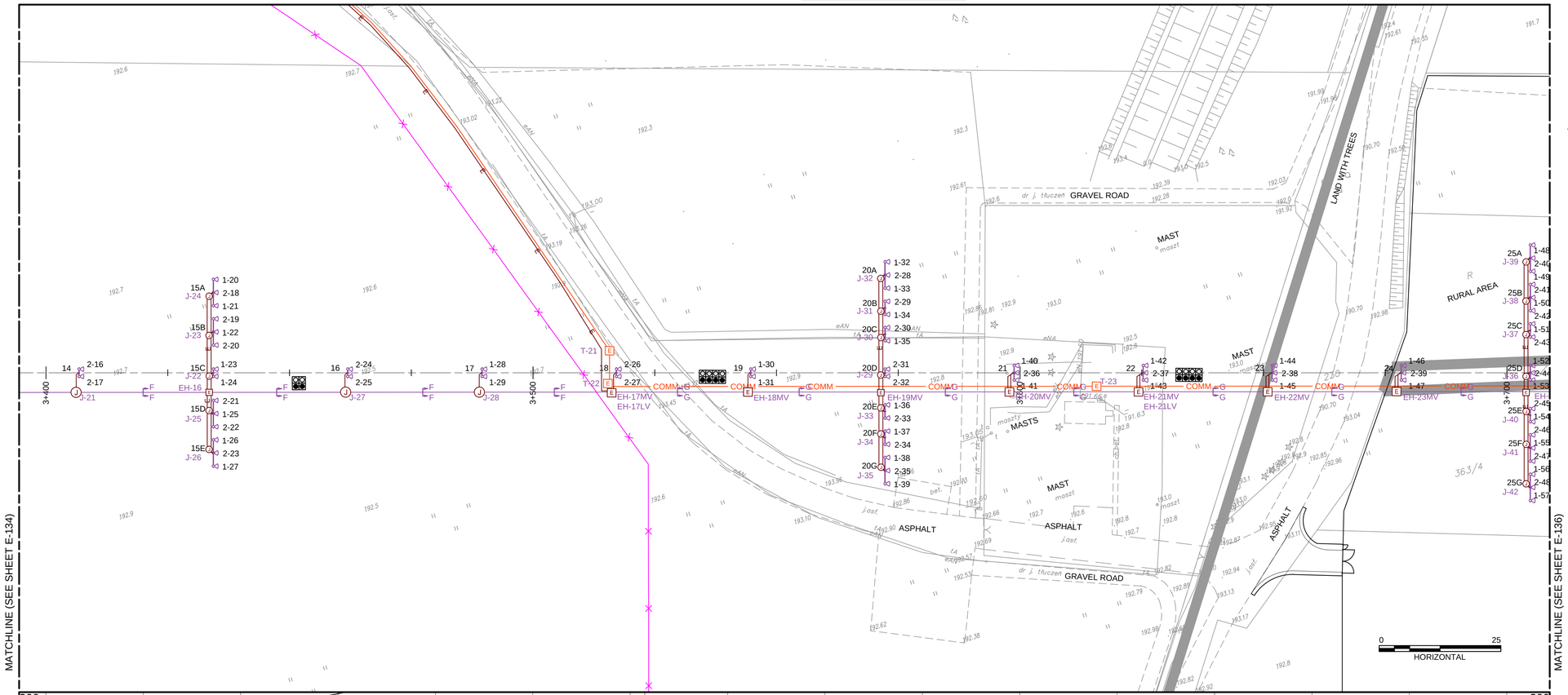

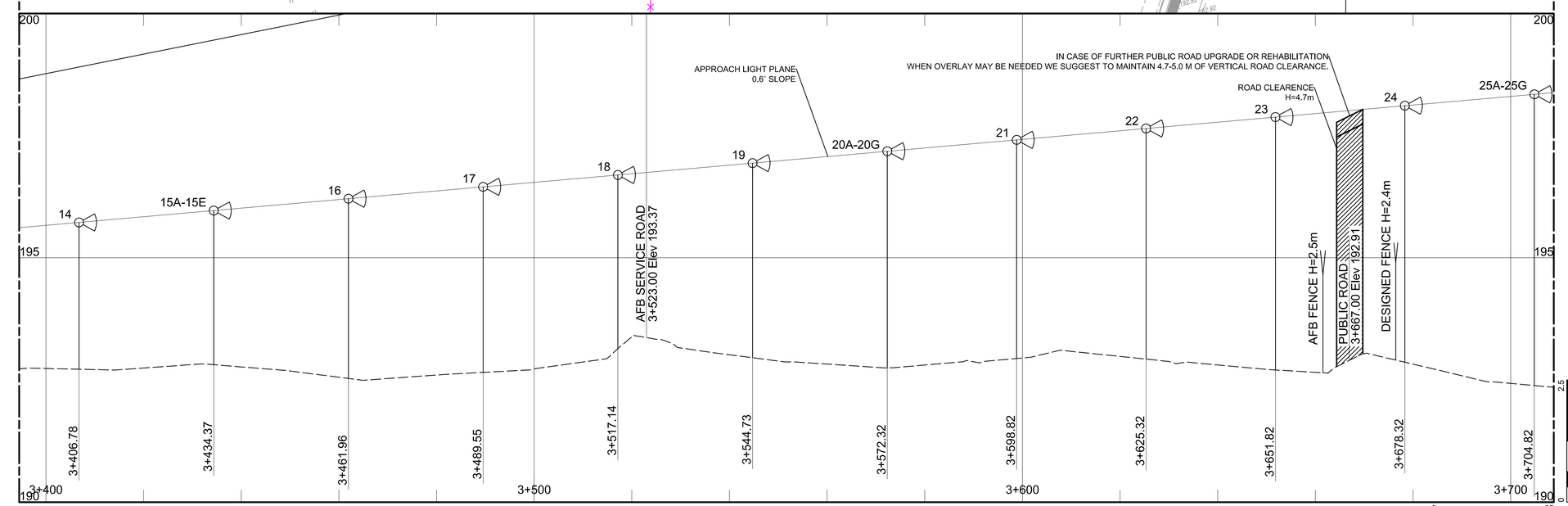

RUNWAY 28 CENTERLINE PROFILE

LEGEND:

- ELEC SERIES CKT — OBWÓD SZEREGOWY
- TWO ELEC SERIES CKTS — DWA OBWODY SZEREGOWE
- ELEC MANHOLE — STUDNIA ELE. (4 / E-520)
- ELEC JUNCTION BOX — SKRZYNKA PRZYŁĄCZENIOWA (2 / E-510)
- ELEC HANDHOLE — STUDZIENKA ELE.
- UNIDIR.THRESHOLD INSET LIGHT — JEDNOKIER. ZAGŁĘBIONE ŚWIATŁO PROGU
- BIDIR. THRESHOLD&RWY END INSET LIGHT — DWUKIER. ZAGŁĘBIONE ŚWIATŁO PROGU I KOŃCA DS
- BIDIR. RWY EDGE ELEVATED LIGHT — DWUKIER. NAZIEMNE ŚWIATŁO KRAWĘDZI DS
- BIDIR. RWY EDGE SEMI FLUSH LIGHT — DWUKIER. ZAGŁĘBIONE ŚWIATŁO KRAWĘDZI DS
- UNIDIR. OVERRUN EDGE ELEVATED LIGHT — NAZIEMNE ŚWIATŁO KRAWĘDZI WYBIEGU
- OMNIDIR. TWY EDGE ELEVATED LIGHT — NAZIEMNE ŚWIATŁO KRAWĘDZI DK
- OMNIDIR. TWY EDGE SEMI FLUSH LIGHT — ZAGŁĘBIONE ŚWIATŁO KRAWĘDZI DK
- SEMI FLUSH APPROACH LIGHT — ZAGŁĘBIONE ŚWIATŁO PODEJŚCIA
- SINGLE APPROACH LIGHT — POJEDYNCZE ŚWIATŁO PODEJŚCIA
- APPROACH LIGHTS - ONE CROSSBAR — POPRZECZKA ŚWIATEŁ PODEJŚCIA
- AREA LIGHT POLE — ŚWIATŁO NAZIEMNE
- 1-1 CKT NUMBER - LIGHT NUMBER — NUMER OBWODU - NUMER OPRAWY
- 5A LIGHT BAR NUMBER — NUMER MASZTU

US Army Corps of Engineers®

MARK	DESCRIPTION	DATE

DESIGNED BY: K. LORENZ
DRAWN BY: M. STASIEWICZ
CHECKED BY: K. LEPERA
SUBMITTED BY: D. DIEHL
SIZE: ANSI D
ISSUE DATE: MARCH 2017
SOLICITATION NO.:
PROJECT NO.: PAY215002A

U.S. ARMY CORPS OF ENGINEERS
KONRAD ADENAUER RING 39
WIESBADEN, D-65187 / GERMANY

AECOM INTERNATIONAL, INC.
SIEMENSSTRAE 10
NEU-ISENBURG, 63263

ERI: IMPROVE SUPPORT INFRASTRUCTURE
LASK AB, POLAND

RUNWAY 28 CALVERT SYSTEM, PLAN AND PROFILE
DS 10/28 PLAN I PROFIL ŚWIATEŁ PODEJŚCIA

SHEET ID
E-135

E-133 | E-134 | E-135 | E-136

C:\PWWORKING\AECOM_EU\LLAWICKA\D0159839\15-D-0008-0003EEA201.DWG
5/13/2016 LUCYNA.LAWICKA 1:500 & 1:50/500

100%

RUNWAY 10/28 PLAN

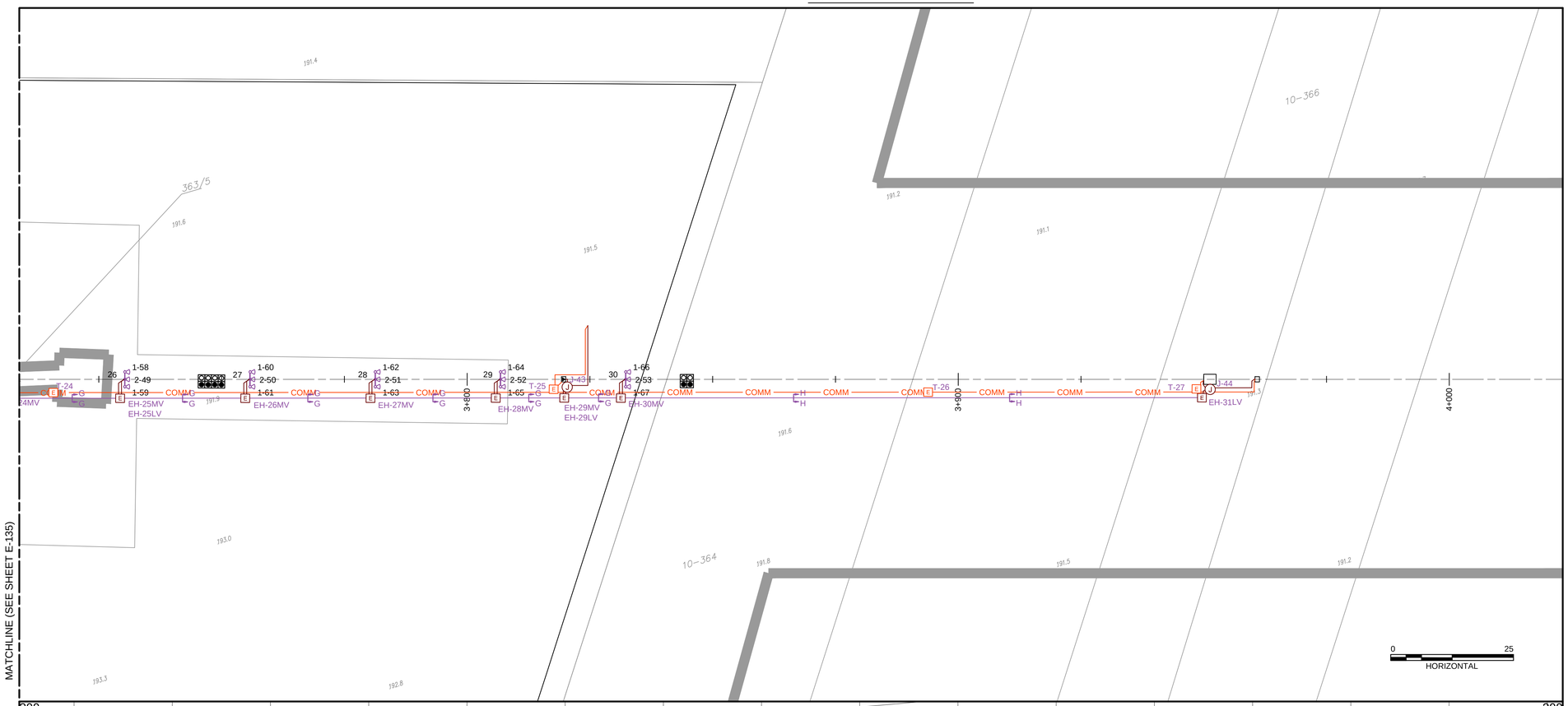

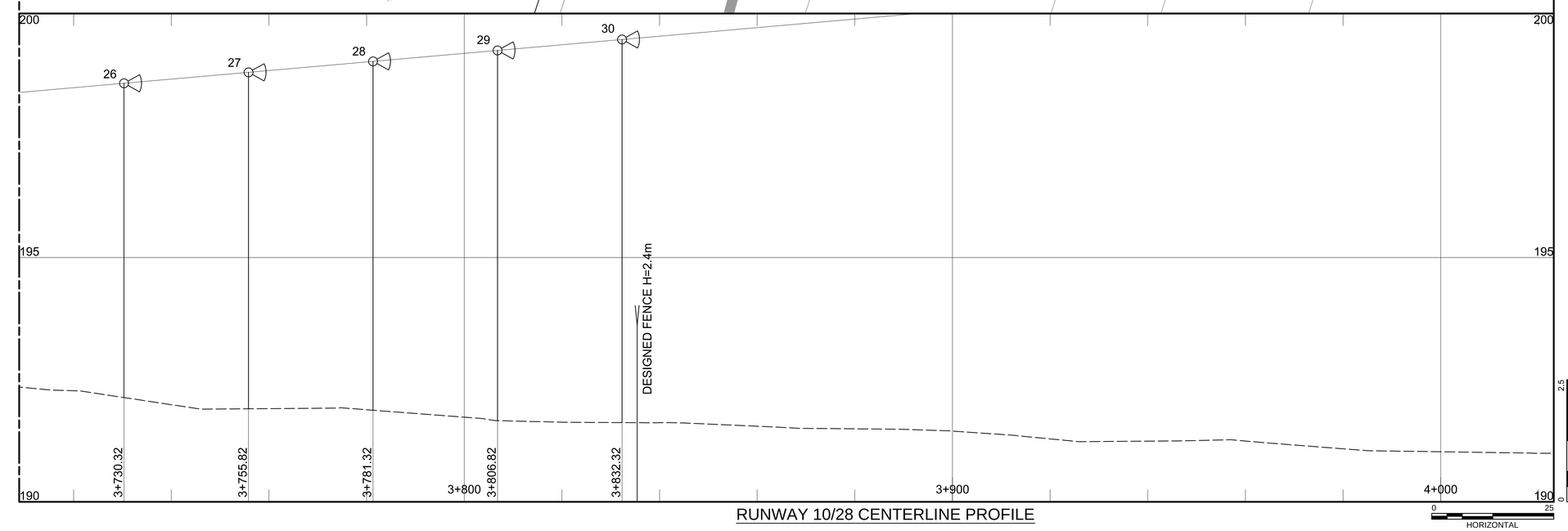

RUNWAY 10/28 CENTERLINE PROFILE

N

LEGEND:

- ELEC SERIES CKT — OBWÓD SZEREGOWY
- TWO ELEC SERIES CKTS — DWA OBWODY SZEREGOWE
- ELEC MANHOLE — STUDNIA ELE. (4 / E-520)
- ELEC JUNCTION BOX — SKRZYNKA PRZYŁĄCZENIOWA (2 / E-510)
- ELEC HANDHOLE — STUDZIENKA ELE.
- UNIDIR.THRESHOLD INSET LIGHT — JEDNOKIER. ZAGŁĘBIONE ŚWIATŁO PROGU
- BIDIR. THRESHOLD&RWY END INSET LIGHT — DWUKIER. ZAGŁĘBIONE ŚWIATŁO PROGU I KOŃCA DS
- BIDIR. RWY EDGE ELEVATED LIGHT — DWUKIER. NAZIEMNE ŚWIATŁO KRAWĘDZI DS
- BIDIR. RWY EDGE SEMI FLUSH LIGHT — DWUKIER. ZAGŁĘBIONE ŚWIATŁO KRAWĘDZI DS
- UNIDIR. OVERRUN EDGE ELEVATED LIGHT — NAZIEMNE ŚWIATŁO KRAWĘDZI WYBIEGU
- OMNIDIR. TWY EDGE ELEVATED LIGHT — NAZIEMNE ŚWIATŁO KRAWĘDZI DK
- OMNIDIR. TWY EDGE SEMI FLUSH LIGHT — ZAGŁĘBIONE ŚWIATŁO KRAWĘDZI DK
- SEMI FLUSH APPROACH LIGHT — ZAGŁĘBIONE ŚWIATŁO PODEJŚCIA
- SINGLE APPROACH LIGHT — POJEDYNCZE ŚWIATŁO PODEJŚCIA
- APPROACH LIGHTS - ONE CROSSBAR — POPRZECZKA ŚWIATEŁ PODEJŚCIA
- AREA LIGHT POLE — ŚWIATŁO NAZIEMNE
- 1-1 CKT NUMBER - LIGHT NUMBER — NUMER OBWODU - NUMER OPRAWY
- 5A LIGHT BAR NUMBER — NUMER MASZTU

E-133	E-134	E-135	E-136

US Army Corps of Engineers®

MARK	DESCRIPTION	DATE

DESIGNED BY: K. LORENZ
DRAWN BY: M. STASIEWICZ
CHECKED BY: K. LEPERA
SUBMITTED BY: D. DIEHL
SIZE: ANSI D
ISSUE DATE: MARCH 2017
SOLICITATION NO.:
PROJECT NO.: PAY215002A

U.S. ARMY CORPS OF ENGINEERS
KONRAD ADENAUER RING 39
WIESBADEN, D-65187 / GERMANY

AECOM INTERNATIONAL, INC.
SIEMENSSTRAAE 10
NEU-ISENBURG, 63263

ERI: IMPROVE SUPPORT INFRASTRUCTURE
LASK AB, POLAND

RUNWAY 28 CALVERT SYSTEM, PLAN AND PROFILE
DS 10/28 PLAN I PROFIL ŚWIATEŁ PODEJŚCIA

SHEET ID
E-136

C:\PWWORKING\AECOM_EU\LLAWICKA\D0159839\15-D-0008-0003EEA201.DWG
5/13/2016 LUCYNA.LAWICKA 1:500 & 1:50/500

100%

APPROACH LIGHTING*

ŚWIATŁA PODEJŚCIA

Light bar number / Numer masztu	Light number / Numer oprawy	Centerline Station / Kilometr montażu	Offset	Lamp elevation / Wyniesienie oprawy [m]	Power [W] / Moc [W]
1	1-1	3+030.48	0	Ground mounted	150
2	2-1	3+060.97	0		
3	1-2	3+091.45	0		
4	2-2	3+121.94	0		
5A	1-3	3+152.42	11.82L	0.10	
5B	2-3		9.12L	0.12	
5C	1-4		6.42L	0.15	
5D	2-4		3.72L	0.18	
5E	1-5		0	0.21	
5F	2-5		3.72R	0.25	
5G	1-6		6.42R	0.28	
5H	2-6		9.12R	0.30	
5I	1-7		11.82R	0.33	
6	2-7	3+182.22	0	0.25	
7	1-8	3+210.02	0	0.53	
8	2-8	3+238.82	0	0.89	
9	1-9	3+267.62	0	1.25	
10A	1-10	3+296.42	15.58L	1.39	
	2-9		12.88L		
	1-11		10.18L		
10B	2-10		7.48L	1.41	
	1-12		4.78L		
10C	2-11		0	1.44	
10D	1-13		4.78R	1.52	
	2-12		7.48R		
10E	1-14		10.18R	1.47	
	2-13		12.88R		
	1-15		15.58R		
11	1-16	3+324.01	0.75L	1.81	
	1-17		0.75R		
12	2-14	3+351.60	0.75L	2.21	
	2-15		0.75R		
13	1-18	3+379.19	0.75L	2.48	
	1-19		0.75R		
14	2-16	3+406.78	0.75L	2.68	
	2-17		0.75R		

Light bar number / Numer masztu	Light number / Numer oprawy	Centerline Station / Kilometr montażu	Offset	Lamp elevation / Wyniesienie oprawy [m]	Power [W] / Moc [W]
15A	1-20	3+434.37	19.18L	2.91	150
	2-18		16.39L		
	1-21		13.78L		
15B	2-19		11.08L	2.88	
	1-22		8.39L		
	2-20		5.69L		
15C	1-23		0.75L	2.86	
	1-24		0.75R		
15D	2-21		5.69R	2.79	
	1-25		8.38R		
	2-22		11.08R		
15E	1-26		13.78R	2.75	
	2-23		16.48R		
	1-27		19.18R		
16	2-24	3+461.96	0.75L	3.42	
	2-25		0.75R		
17	1-28	3+489.55	0.75L	3.57	
	1-29		0.75R		
18	2-26	3+517.14	0.75L	3.37	
	2-27		0.75R		
19	1-30	3+554.73	0.75L	3.83	
	1-31		0.75R		
20A	1-32	3+572.32	22.79L	4.41	
	2-28		20.09L		
	1-33		17.39L		
20B	2-29		14.69L	4.38	
	1-34		11.99L		
20C	2-30		9.29L	4.35	
	1-35		6.59L		
20D	2-31		0.75L	4.31	
	2-32		0.75R		
20E	1-36		6.59R	4.28	
	2-33		9.29R		
20F	1-37		11.99R	4.27	
	2-34		14.69R		
20G	1-38		17.4R	4.24	
	2-35		20.09R		
	1-39		22.8R		
21	1-40	3+598.82	1.5L	4.39	
	2-36		0		
	1-41		1.5R		

*FAA AC 150/5345 - 46D
ICAO ANNEX 14, VOL 1, P5.3.4

US Army Corps of Engineers®

MARK	DESCRIPTION	DATE

DESIGNED BY: K. LOPEZ
DRAWN BY: M. STASIEWICZ
CHECKED BY: K. LEPERA
SUBMITTED BY: D. DIEHL
SIZE: ANSI D
ISSUE DATE: MARCH 2017
SOLICITATION NO.:
PROJECT NO.: PAY215002A

U.S. ARMY CORPS OF ENGINEERS
KONRAD ADENAUER RING 29
WIESBADEN, D-65187 / GERMANY

AECOM INTERNATIONAL, INC.
SIEMENSSTRAGE 10
NEU-ISENBURG, 63263

ERI: IMPROVE SUPPORT INFRASTRUCTURE
ŁASK AB, POLAND

APPROACH LIGHTS - NOTES
ŚWIATŁA PODEJŚCIA - NOTATKI

SHEET ID
E-137

C:\PWWORKING\AECOM_EU\LLAWICKA\D0159839\15-D-0008-0003EEA201.DWG
5/13/2016 LUCYNA.LAWICKA SCALE: NTS

100%

APPROACH LIGHTING*
ŚWIATŁA PODEJŚCIA

Light bar number Numer masztu	Light number Numer oprawy	Centerline Station Kilometr montażu	Offset	Lamp elevation Wyniesienie oprawy [m]	Power [W] Moc [W]
22	1-42	3+625.32	1.5L	4.67	150
	2-37		0		
	1-43		1.5R		
23	1-44	3+651.82	1.5L	5.15	
	2-38		0		
	1-45		1.5R		
24	1-46	3+678.32	1.5L	5.26	
	2-39		0		
	1-47		1.5R		
25A	1-48	3+704.82	26.25L	6.48	
	2-40		23.55L		
	1-39		20.85L		
25B	2-41		18.15L	6.32	
	1-50		15.46L		
	2-42		12.75L		
25C	1-51		10.06L	6.18	
	2-43		7.36L		
25D	1-52		1.5L	6.01	
	2-44		0		
	1-53		1.5R		
25E	2-45		7.35R	5.92	
	1-54		10.05R		
25F	2-46		12.75R	5.88	
	1-55		15.44R		
	2-47		18.15R		
25G	1-56		20.85R	5.71	
	2-48		23.54R		
	1-57		26.25R		

Light bar number Numer masztu	Light number Numer oprawy	Centerline Station Kilometr montażu	Offset	Lamp elevation Wyniesienie oprawy [m]	Power [W] Moc [W]
26		3+730.32		6.51	150
	2-49		0		
	1-59		1.5R		
27	1-60	3+755.82	1.5L	7.00	
	2-50		0		
	1-61		1.5R		
28	1-62	3+781.32	1.5L	7.28	
	2-51		0		
	1-63		1.5R		
29	1-64	3+806.82	1.5L	7.75	
	2-52		0		
	1-65		1.5R		
30	1-66	3+832.32	1.5L	8.05	
	2-53		0		
	1-67		1.5R		

*FAA AC 150/5345 - 46E
ICAO ANNEX 14, VOL 1, P5.3.4

US Army Corps of Engineers®

MARK	DESCRIPTION	DATE

DESIGNED BY: K. LOPEREZ
DRAWN BY: M. STASIEWICZ
CHECKED BY: K. LEPERA
SUBMITTED BY: D. DIEHL
SIZE: ANSI D
ISSUE DATE: MARCH 2017
SOLICITATION NO.:
PROJECT NO.: PAY215002A

U.S. ARMY CORPS OF ENGINEERS
KONRAD ADENAUER RING 39
WIESBADEN, D-65187 / GERMANY

AECOM INTERNATIONAL, INC.
SIEMENSSTRAGE 10
NEU-ISENBURG, 63263

ERI: IMPROVE SUPPORT INFRASTRUCTURE
ŁASK AB, POLAND

APPROACH LIGHTS - NOTES
ŚWIATŁA PODEJŚCIA - NOTATKI

SHEET ID
E-138

C:\PWWORKING\AECOM_EU\LLAWICKA\D0159839\15-D-0008-0003EEA201.DWG
5/13/2016 LUCYNA.LAWICKA SCALE: NTS

100%

RWY Edge & End Lights*, OVRN Edge Lights*							
No.	Centerline Station	Offset	Mounting Type	Directionality	Lens color(s)	Power [W]	Notes
6-100	2+500.48	33L	In-pavement	Bi	Y/W	150	
5-100	2+550.63	33L	In-pavement	Bi	Y/W	150	
6-101	2+603	33L	In-pavement	Bi	Y/W	150	
5-101	2+650.93	33L	In-pavement	Bi	Y/W	150	
6-102	2+701.08	33L	In-pavement	Bi	Y/W	150	
5-102	2+751.23	33L	Elevated	Bi	Y/W	150	
6-103	2+801.38	33L	Elevated	Bi	Y/W	150	
5-103	2+851.53	33L	Elevated	Bi	Y/W	150	
6-104	2+901.68	33L	In-pavement	Bi	Y/W	150	
5-104	2+951.83	33L	In-pavement	Bi	Y/W	150	
6-105	3+001.97	33L	In-pavement	Uni	R	105	Combined with threshold light
5-105	3+001.97	8.25L	In-pavement	Uni	R	105	
6-106	3+001.97	0	In-pavement	Uni	G	105	
5-106	3+001.97	24.75L	In-pavement	Uni	R	105	
6-107	3+001.97	16.5L	In-pavement	Uni	R	105	
5-107	3+052.13	33L	Elevated	Uni	R	150	
6-108	3+102.28	33L	Elevated	Uni	R	150	
5-108	3+151.21	33L	Elevated	Uni	R	150	
6-109	3+151.21	24.75L	Elevated	Uni	R	150	
5-109	3+151.21	16.5L	Elevated	Uni	R	150	
6-110	3+151.21	8.25L	Elevated	Uni	R	150	
5-110	3+151.21	0	Elevated	Uni	R	150	
6-111	3+151.21	8.25R	Elevated	Uni	R	150	
5-111	3+151.21	16.5R	Elevated	Uni	R	150	
6-112	3+151.21	24.75R	Elevated	Uni	R	150	
5-112	3+151.21	33R	Elevated	Uni	R	150	
6-113	3+102.28	33R	Elevated	Uni	R	150	
5-113	3+052.13	33R	Elevated	Uni	R	150	
6-114	3+001.97	33R	In-pavement	Uni	R	150	Combined with threshold light
5-114	3+001.97	8.25R	In-pavement	Uni	R	105	
6-115	3+001.97	16.5R	In-pavement	Uni	R	105	
5-115	3+001.97	24.75R	In-pavement	Uni	R	105	
5-116	2+951.83	33R	Elevated	Bi	Y/W	150	
6-116	2+901.68	33R	Elevated	Bi	Y/W	150	
5-117	2+851.53	33R	Elevated	Bi	Y/W	150	
6-117	2+801.38	33R	Elevated	Bi	Y/W	150	
5-118	2+751.23	33R	Elevated	Bi	Y/W	150	
6-118	2+701.08	33R	In-pavement	Bi	Y/W	150	
5-119	2+650.93	33R	In-pavement	Bi	Y/W	150	
6-119	2+603	33R	In-pavement	Bi	Y/W	150	
5-120	2+550.63	33R	In-pavement	Bi	Y/W	150	
6-120	2+500.48	33R	In-pavement	Bi	Y/W	150	

*FAA AC 150/5345 - 46E
FAA AC 150/5345 - 46E L-862

US Army Corps of Engineers®

MARK	DESCRIPTION	DATE

DESIGNED BY: K. LOPEZ
DRAWN BY: M. STASIEWICZ
CHECKED BY: K. LEPERA
SUBMITTED BY: D. DIEHL
SIZE: ANSI D
ISSUE DATE: MARCH 2017
SOLICITATION NO.:
PROJECT NO.: PAY215002A

U.S. ARMY CORPS OF ENGINEERS
KONRAD ADENAUER RING 39
WIESBADEN, D-65187 / GERMANY

AECOM INTERNATIONAL, INC.
SIEMENSSTRAGE 10
NEU-ISENBURG, 63263

ERI: IMPROVE SUPPORT INFRASTRUCTURE
ŁASK AB, POLAND

LIGHT FIXTURE SCHEDULE AND DIMENSIONS
ZESTAWIENIE OPRAW OŚWIETLENIOWYCH

SHEET ID
E-150

C:\PWWORKING\AECOM_EU\LLAWICKA\D0159839\15-D-0008-0003EEA201.DWG
5/13/2016 LUCYNA.LAWICKA SCALE: NTS

100%

Taxiway Lights*						
No.	Centerline Station	Offset	Mounting Type	Directionality	Lens color(s)	Power [W]
22-200	2+502.83	59.962L	Elevated	Omni	B	45
21-200	2+503.52	49.187L	Elevated			
22-201	2+509.05	39.914L	Elevated			
21-201	2+518.2	34.168L	In-pavement			
22-202	2+872.68	34.499L	Elevated			
21-202	2+892.85	54.666L	Elevated			
22-203	2+913.01	74.833L	Elevated			
21-203	2+933.18	95L	Elevated			
22-204	2+956.12	95L	Elevated			
21-204	2+979.07	95L	Elevated			
22-205	3+002.01	95L	Elevated			
21-205	3+002.01	64.753L	Elevated			
22-206	3+002.01	34.5L	Elevated			

Threshold Lights*						
No.	Centerline Station	Offset	Mounting Type	Directionality	Lens color(s)	Power [W]
3-100	3+001.97	33L	In-pavement	Bi	G	210
4-100	3+001.97	30.25L		Uni		
3-101	3+001.97	27.5L		Uni		
4-101	3+001.97	24.75		Bi		
3-102	3+001.97	22L		Uni		
4-102	3+001.97	19.25L		Uni		
3-103	3+001.97	16.5L		Bi		
4-103	3+001.97	13.75L		Uni		
3-104	3+001.97	11L		Uni		
4-104	3+001.97	8.25L		Bi		
3-105	3+001.97	5.5L		Uni		
4-105	3+001.97	2.75L		Uni		
3-106	3+001.97	0		Bi		
4-106	3+001.97	2.75L		Uni		
3-107	3+001.97	5.5L		Uni		
4-107	3+001.97	8.25L		Bi		
3-108	3+001.97	11L		Uni		
4-108	3+001.97	13.75L		Uni		
3-109	3+001.97	16.5L		Bi		
4-109	3+001.97	19.25L		Uni		
3-110	3+001.97	22L		Uni		
4-110	3+001.97	24.75		Bi		
3-111	3+001.97	27.5L		Uni		
4-111	3+001.97	30.25L		Uni		
3-112	3+001.97	33L		Bi		

*FAA AC 150/5345 - 46B
FAA AC 150/5345 - 46E
FAA AC 150/5345 - 46E L-852T

US Army Corps of Engineers®

MARK	DESCRIPTION	DATE

DESIGNED BY: K. LOPEZ
DRAWN BY: M. STASIEWICZ
CHECKED BY: K. LEPERA
SUBMITTED BY: D. DIEHL
SIZE: ANSI D
ISSUE DATE: MARCH 2017
SOLICITATION NO.:
PROJECT NO.: PAY215002A

U.S. ARMY CORPS OF ENGINEERS
KONRAD ADENAUER RING 39
WIESBADEN, D-65187 / GERMANY

AECOM INTERNATIONAL, INC.
SIEMENSSTRAGE 10
NEU-ISENBURG, 63263

ERI: IMPROVE SUPPORT INFRASTRUCTURE
ŁASK AB, POLAND

LIGHT FIXTURE SCHEDULE AND DIMENSIONS
ZESTAWIENIE OPRAW OŚWIETLENIOWYCH

SHEET ID
E-151

C:\PWWORKING\AECOM_EU\LLAWICKA\D0159839\15-D-0008-0003EEA201.DWG
5/13/2016 LUCYNA.LAWICKA SCALE: NTS

100%

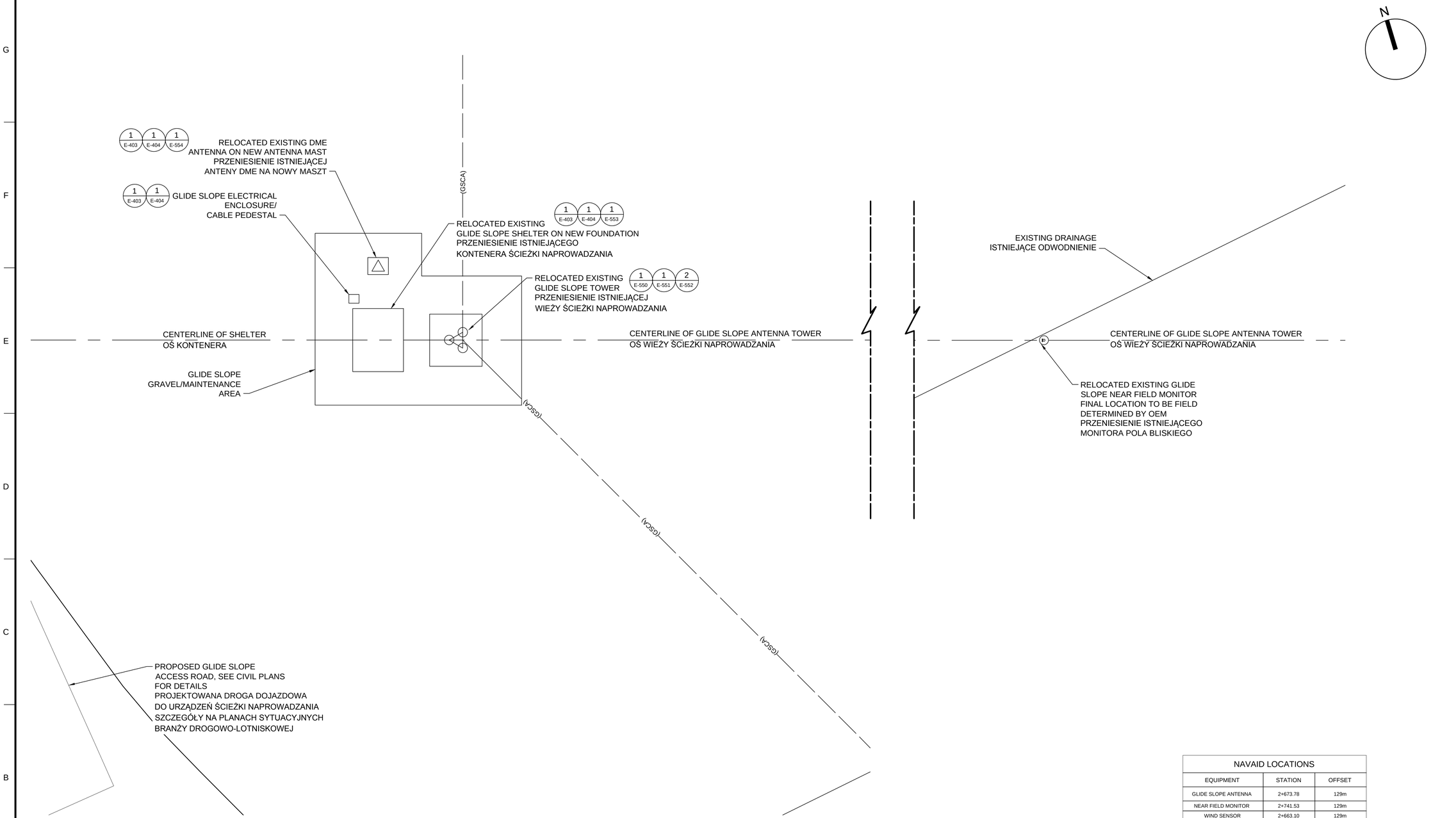

NAVAID LOCATIONS		
EQUIPMENT	STATION	OFFSET
GLIDE SLOPE ANTENNA	2+673.78	129m
NEAR FIELD MONITOR	2+741.53	129m
WIND SENSOR	2+663.10	129m

NOTE: STATION AND OFFSET INFORMATION IS REFERENCED FROM THE RUNWAY 28 BASELINE

UWAGA: WARTOŚCI KILOMETRAŻU I ODSUNIĘCIA ODNOSZĄ SIĘ DO LINII BAZOWEJ DROGI STARTOWEJ 28

5 0 5 10
1:100 (SCALE IN METERS)

US Army Corps of Engineers ®

MARK	DESCRIPTION	DATE

U.S. ARMY CORPS OF ENGINEERS
KONRAD ADENAUER RING 39
WIESBADEN, D-65187 / GERMANY

AECOM INTERNATIONAL, INC.
SIEMENSSTRABE 10
NEU-ISENBURG, 63263

DESIGNED BY: K. THOMAS
DRAWN BY: D. BAUMGARDNER
CHECKED BY: D. HUGHES
SUBMITTED BY: D. DEHL
SIZE: ANSI D
ISSUE DATE: MARCH 2017
SOLICITATION NO.:
CONTRACT NO.: PAYZ15002A

ERI: IMPROVE SUPPORT INFRASTRUCTURE
ŁASK AB, POLAND

GLIDE SLOPE SITE PLAN - RUNWAY 28
ŚCIEŻKA SCHODZENIA PLAN SYTUACYJNY
DROGA STARTOWA 28

SHEET ID
E-402

C:\PWWORKING\AECOM_EU\DBAUMGARDNER_TM\D0159839\15-D-0008-0003EEA403.DWG
8/3/2016 DAVID.BAUMGARDNER

100%

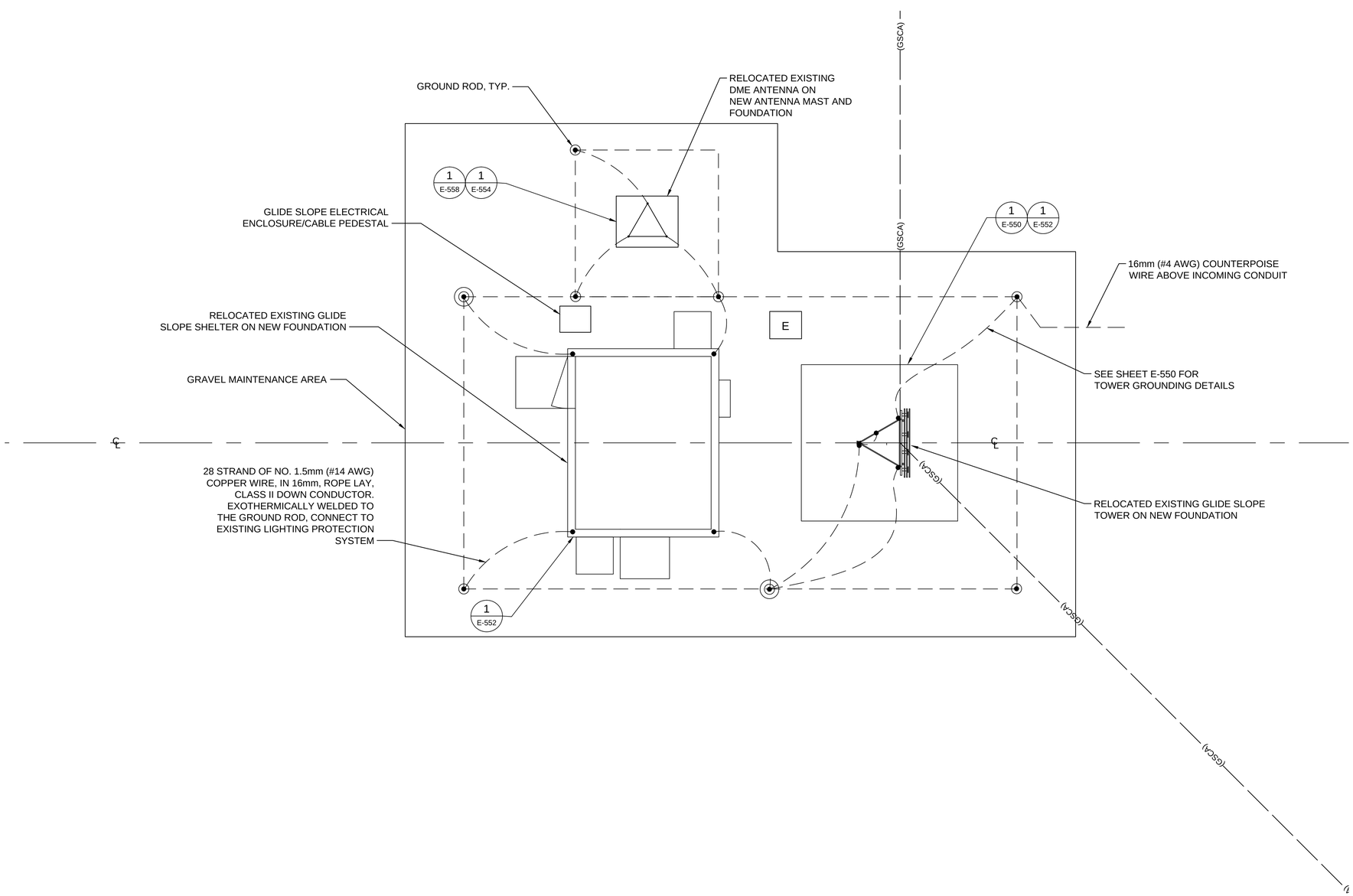

LEGEND:

- 21mm X 3m (3/4" X 10 FOOT) GROUND ROD.
- NO. 95mm (NO. 4/0 AWG) GROUND WIRE UON, EARTH ELECTRODE SYSTEM.
- GROUND WELL

2 0 2 4
1:40 (SCALE IN METERS)

US Army Corps of Engineers®

MARK	DESCRIPTION	DATE

DESIGNED BY: K. THOMAS
DRAWN BY: D. BAUMGARDNER
CHECKED BY: D. HUGHES
SUBMITTED BY: D. DIEHL
SIZE: ANSI D
ISSUE DATE: MARCH 2017
SOLICITATION NO.:
CONTRACT NO.: PAYZ15002A

U.S. ARMY CORPS OF ENGINEERS
KONRAD ADENAUER RING 39
WIESBADEN, D-65187 / GERMANY

AECOM INTERNATIONAL, INC.
SIEMENSSTRAGE 10
NEU-ISENBURG, 63263

ERI: IMPROVE SUPPORT INFRASTRUCTURE
LASK AB, POLAND

GLIDE SLOPE GROUNDING PART PLAN - RUNWAY 23

SHEET ID
E-403

C:\PWWORKING\AECOM_EU\DBAUMGARDNER_TM\D0159839\15-D-0008-0003EEA503.DWG
5/12/2016 DAVID.BAUMGARDNER 1:500

100%

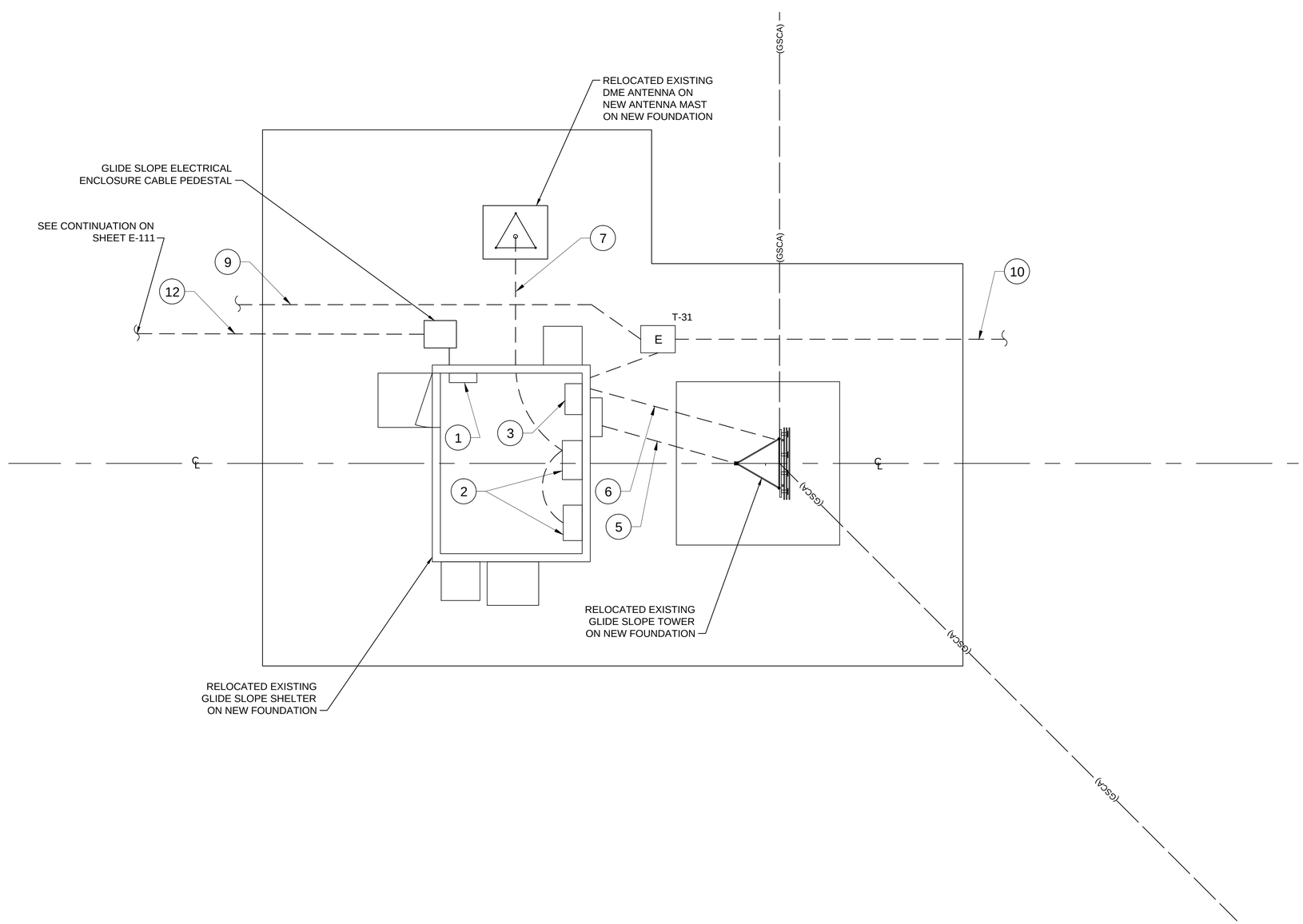

DRAWING NOTES:

1. MAIN PANELBOARD.
2. DME EQUIPMENT.
3. GLIDE SLOPE ELECTRONICS.
4. NOT USED.

DRAWING NOTES CONTINUED:

5. GLIDE SLOPE COMMUNICATION CABLE IN 53mm (2") RGS OVERHEAD CONDUIT.
6. GLIDE SLOPE ANTENNA TOWER POWER CABLE IN 27mm (1") RGS OVERHEAD CONDUIT.
7. NEW SELEX ES DME POWER AND CONTROL CABLE ASSEMBLIES COMMUNICATION CABLE IN 53mm (2") OVERHEAD RGS CONDUIT AN EXPOSED IN SHELTER FROM ANTENNA TO ELECTRONICS.
8. NOT USED
9. NAVAIDS SHELTER COMMUNICATIONS CONTROL CABLE
10. NEW SELEX ES NEAR FIELD MONITOR RF SIGNAL CABLE IN 53mm (2") SCH 40 PVC TO NEAR FIELD MONITOR
11. NOT USED
12. NAVAID SHELTER SITE POWER CABLE

2 0 2 4
1:40 (SCALE IN METERS)

US Army Corps of Engineers®

MARK	DESCRIPTION	DATE

DESIGNED BY: K. THOMAS
DRAWN BY: D. BAUMGARDNER
CHECKED BY: D. HUGHES
SUBMITTED BY: D. DIEHL
SIZE: ANSI D
ISSUE DATE: MARCH 2017
SOLICITATION NO.:
CONTRACT NO.: PAYZ15002A

U.S. ARMY CORPS OF ENGINEERS
KONRAD ADENAUER RING 39
WIESBADEN, D-65187 / GERMANY

AECOM INTERNATIONAL, INC.
SIEMENSSTRAGE 10
NEU-ISENBURG, 63263

ERI: IMPROVE SUPPORT INFRASTRUCTURE
LASK AB, POLAND

GLIDE SLOPE SITE - POWER AND COMMUNICATION PLAN - RUNWAY 28

SHEET ID
E-404

C:\PWWORKING\AECOM_EU\DBAUMGARDNER_TM\D0159839\15-D-0008-0003EEA404.DWG
5/12/2016 DAVID.BAUMGARDNER 1:500

100%

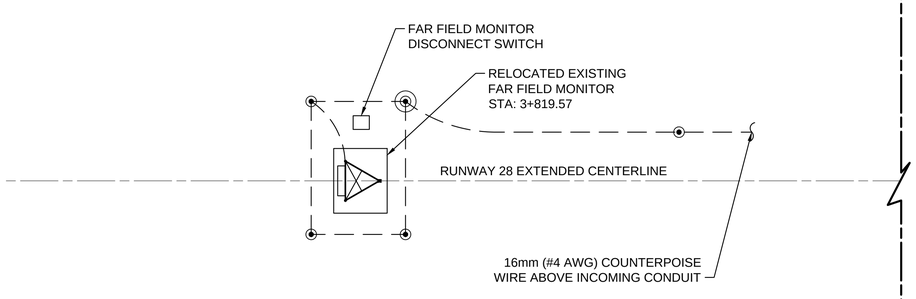

1 E-405 PLAN - FFM SITE - GROUNDING PART PLAN - ON AIRPORT PROPERTY
SCALE: 1:50

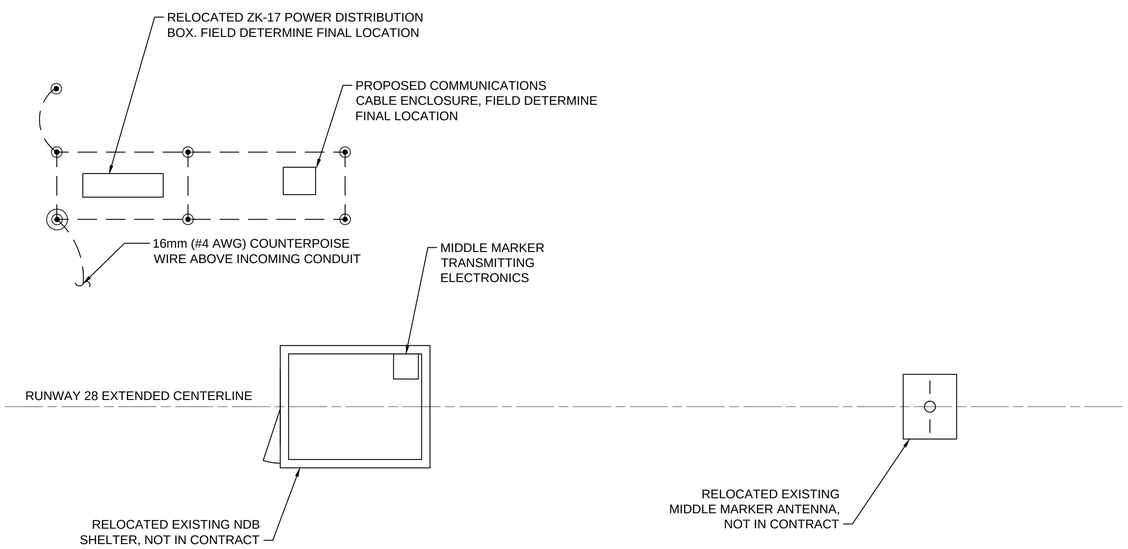

2 E-405 PLAN - NDB SITE - GROUNDING PART PLAN - OFF AIRPORT PROPERTY
SCALE: 1:50

GENERAL NOTES:

1. SEE SHEET E-107 FOR ADDITIONAL INFORMATION ON POWER AND CONTROL CABLES TO THE RELOCATED FFM AND NDB SITES.

LEGEND:

- 21mm X 3m (3/4" X 10 FOOT) GROUND ROD.
- NO. 95mm (NO. 4/0 AWG) GROUND WIRE UON, EARTH ELECTRODE SYSTEM.
- GROUND WELL

2.5 0 2.5 5
1:50 (SCALE IN METERS)

US Army Corps of Engineers®

MARK	DESCRIPTION	DATE

DESIGNED BY: K. THOMAS
DRAWN BY: D. BAUMGARDNER
CHECKED BY: D. HUGHES
SUBMITTED BY: D. DIEHL
SIZE: ANSI D
ISSUE DATE: MARCH 2017
SOLICITATION NO.:
CONTRACT NO.: PAYZ15002A

U.S. ARMY CORPS OF ENGINEERS
KONRAD ADENAUER RING 39
WIESBADEN, D-65187 / GERMANY

AECOM INTERNATIONAL, INC.
SIEMENSSTRAGE 10
NEU-ISENBURG, 63263

ERI: IMPROVE SUPPORT INFRASTRUCTURE
LASK AB, POLAND

NDB SITE - GROUNDING PART PLAN - RUNWAY 28

SHEET ID
E-405

C:\PWWORKING\AECOM_EU\DBAUMGARDNER_TM\D0159839\15-D-0008-0003EEA506.DWG
5/12/2016 DAVID.BAUMGARDNER 1:500

100%

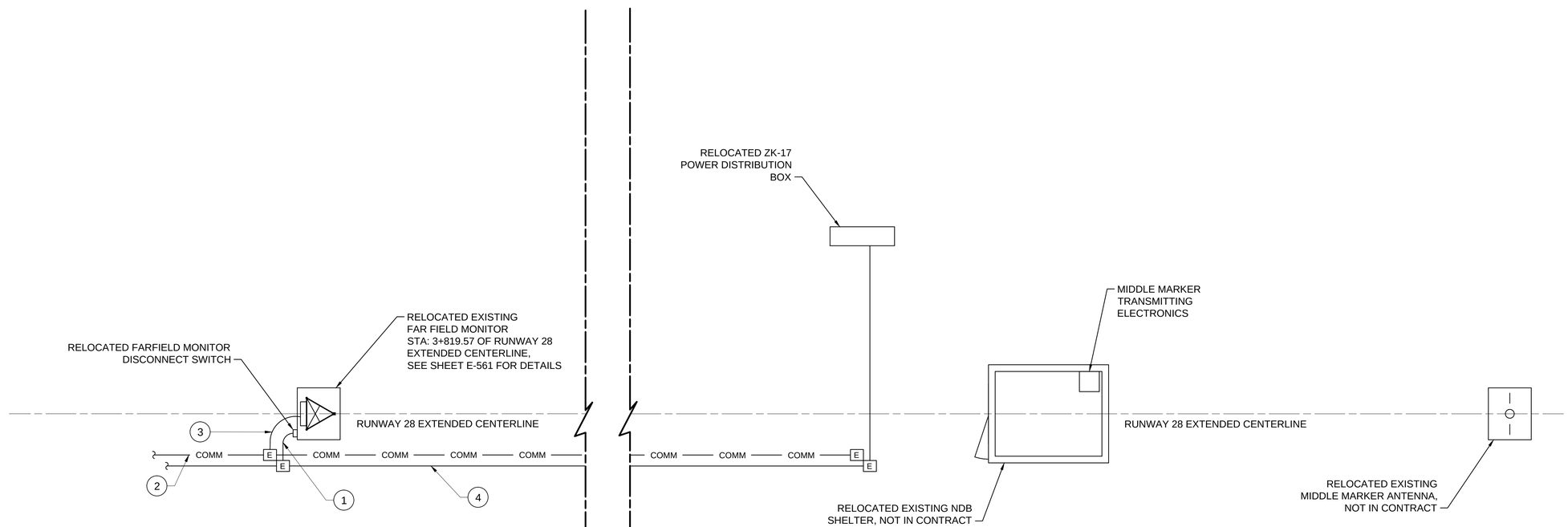

1 E-406 PLAN - FFM SITE - POWER AND COMMUNICATION PART PLAN - ON AIRPORT PROPERTY
SCALE: 1:50

2 E-406 PLAN - NDB SITE - POWER AND COMMUNICATION PART PLAN - OFF AIRPORT PROPERTY
SCALE: 1:50

GENERAL NOTES:

1. SEE SHEET E-107 FOR ADDITIONAL INFORMATION ON POWER AND CONTROL CABLES TO THE RELOCATED FFM AND NDB SITES.

2. POWER OR COMMUNICATION CABLE CONNECTIONS TO NDB EQUIPMENT ARE NIC AND TO BE PERFORMED BY THE POLISH AIRBASE CONTRACTOR. THE RUNWAY EXTENSION CONTRACTOR IS RESPONSIBLE FOR COORDINATING WORK WITH OTHER CONTRACTORS PERFORMING WORK IN THE AREA.

DRAWING NOTES:

1. FAR FIELD MONITOR POWER CONDUIT
2. FAR FIELD MONITOR AND NDB SITE CONTROL CONDUIT
3. FAR FIELD MONITOR CONTROL CONDUIT
4. NDB SITE POWER CONDUIT

2.5 0 2.5 5
1:50 (SCALE IN METERS)

US Army Corps of Engineers®

MARK	DESCRIPTION	DATE

DESIGNED BY: K. THOMAS
DRAWN BY: D. BAUMGARDNER
CHECKED BY: D. HUGHES
SUBMITTED BY: D. WIEHL
SIZE: ANSI D
ISSUE DATE: MARCH 2017
SOLICITATION NO.:
CONTRACT NO.: PAYZ15002A

U.S. ARMY CORPS OF ENGINEERS
KONRAD ADENAUER RING 39
WIESBADEN, D-65187 / GERMANY

AECOM INTERNATIONAL, INC.
SIEMENSSTRAGE 10
NEU-ISENBURG, 63263

ERI: IMPROVE SUPPORT INFRASTRUCTURE
LASK AB, POLAND

NDB SITE - POWER AND COMMUNICATION
PART PLAN - RUNWAY 28

SHEET ID
E-406

C:\PWWORKING\AECOM_EU\DBAUMGARDNER_TM\D0159839\15-D-0008-0003EEA504.DWG
5/12/2016 DAVID.BAUMGARDNER 1:500

100%

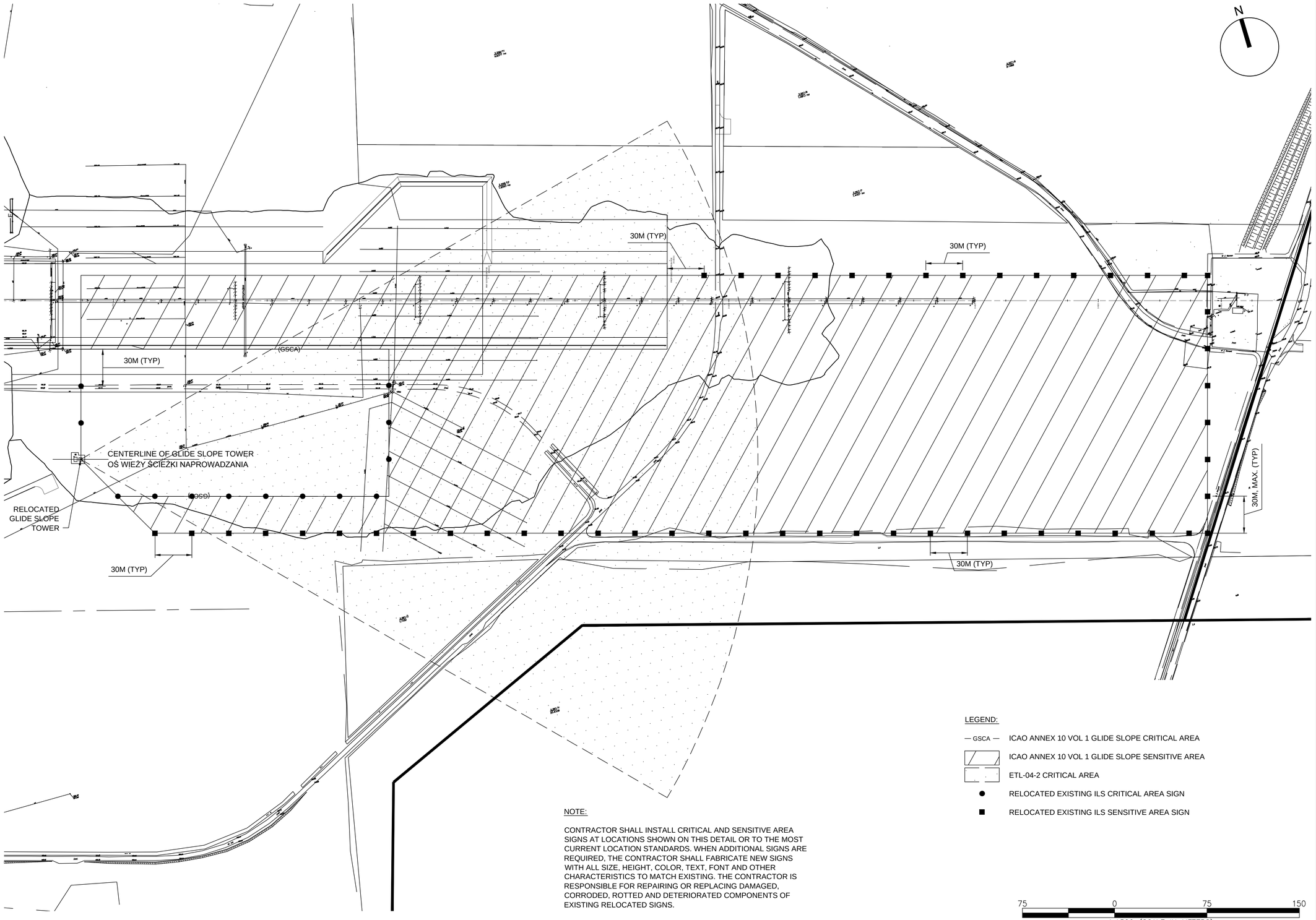

LEGEND:

— GSCA — ICAO ANNEX 10 VOL 1 GLIDE SLOPE CRITICAL AREA

ICAO ANNEX 10 VOL 1 GLIDE SLOPE SENSITIVE AREA

ETL-04-2 CRITICAL AREA

● RELOCATED EXISTING ILS CRITICAL AREA SIGN

■ RELOCATED EXISTING ILS SENSITIVE AREA SIGN

NOTE:

CONTRACTOR SHALL INSTALL CRITICAL AND SENSITIVE AREA SIGNS AT LOCATIONS SHOWN ON THIS DETAIL OR TO THE MOST CURRENT LOCATION STANDARDS. WHEN ADDITIONAL SIGNS ARE REQUIRED, THE CONTRACTOR SHALL FABRICATE NEW SIGNS WITH ALL SIZE, HEIGHT, COLOR, TEXT, FONT AND OTHER CHARACTERISTICS TO MATCH EXISTING. THE CONTRACTOR IS RESPONSIBLE FOR REPAIRING OR REPLACING DAMAGED, CORRODED, ROTTED AND DETERIORATED COMPONENTS OF EXISTING RELOCATED SIGNS.

75 0 75 150

1:1500 (SCALE IN METERS)

US Army Corps of Engineers ®

MARK	DESCRIPTION	DATE

ISSUE DATE: MARCH 2017
SOLICITATION NO.:

DESIGNED BY: K. THOMAS
DRAWN BY: D. BAUMGARDNER
CHECKED BY: D. HUGHES
SUBMITTED BY: O'NEIL
SIZE: ANSI D

PROJECT NO.: PAYZ15002A

U.S. ARMY CORPS OF ENGINEERS
KONRAD ADENAUER RING 29
WIESBADEN, D-65187 / GERMANY

AECOM INTERNATIONAL, INC.
SIEMENSSTRAßE 10
NEU-ISENBURG, 63263

ERI: IMPROVE SUPPORT INFRASTRUCTURE
ŁASK AB, POLAND

GLIDE SLOPE ILS AREAS AND SIGNS PLAN

SHEET ID

E-407

C:\PWWORKING\AECOM_EU\DBAUMGARDNER_TM\D0159839\15-D-0008-0003EEA411.DWG
8/3/2016 DAVID.BAUMGARDNER

100%

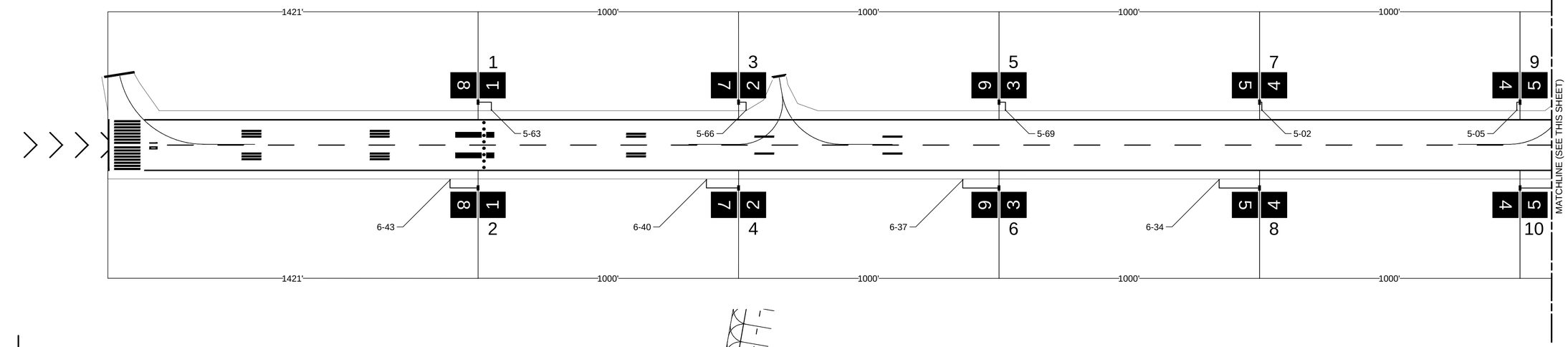

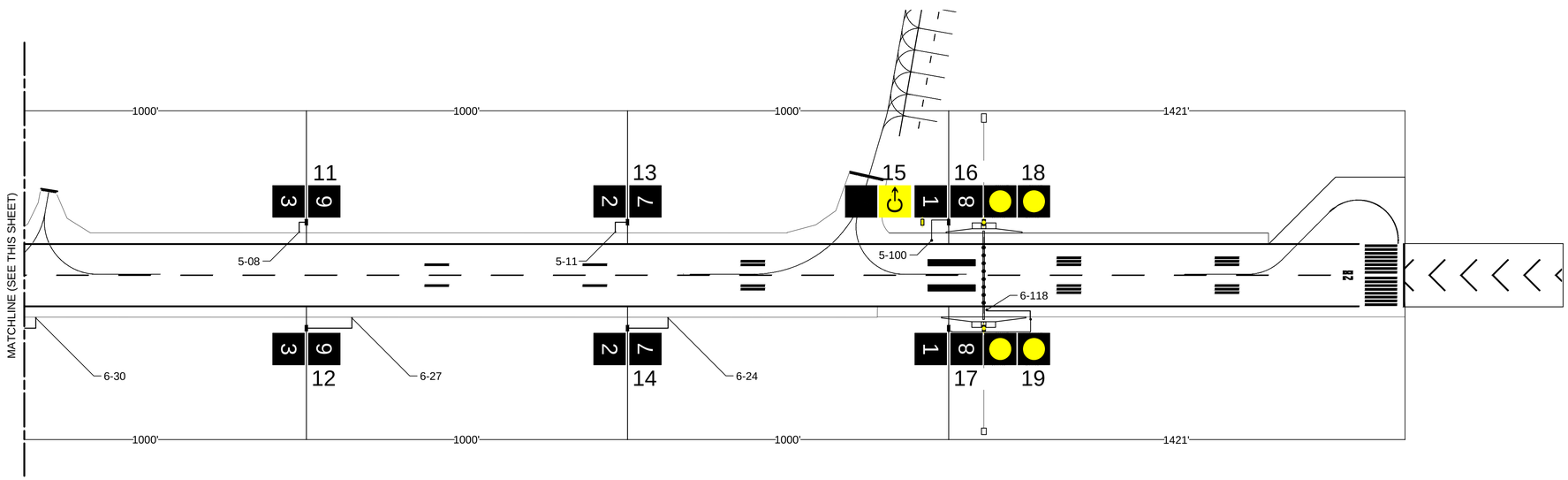

LEGEND:

- IRDM SIGN
- IACM SIGN
- IGS SIGN
- 15 SIGN ID ACCORDING TO SCHEDULE BELOW

NOTES:

THE CONTRACTOR SHALL PROVIDE THE FOLLOWING TO PROVIDE POWER FROM EDGE LIGHTS TO SIGNS

1. 2#8 AND #GROUND WIRE IN 50MM (2") RIGID PVC CONDUIT FROM SIGN TO EDGE LIGHT, CONDUIT SHALL BE CONCRETE ENCASED UNDER PAVED AREAS.
2. ALL EXCAVATION IN BOTH GRASS AREA AND PAVED AREA.
3. RESTORATION OF EXCAVATED PAVEMENT AREA.
4. NECESSARY CORE DRILLING INTO EXISTING LIGHT BASES FOR PROPOSED CONDUIT ENTRY.
5. SPLICE KITS AND ALL OTHER INCIDENTALS TO PROVIDE A WORKING SYSTEM.

PROPOSED SIGN SCHEDULE

	LOCATION		LEGEND		TYPE						
SIGN ID	STATION	OFFSET	FRONT	BACK	FRONT	BACK	TYPE	SIZE	CLASS	MODE	CIRCUIT
1	433.20	50.00L	8	1	W/B	W/B	L-858B	4	2	2	5
2	433.18	50.00P	8	1	W/B	W/B	L-858B	4	2	2	6
3	738.00	50.00L	7	2	W/B	W/B	L-858B	4	2	2	5
4	737.98	50.00P	7	2	W/B	W/B	L-858B	4	2	2	6
5	1042.80	50.00L	6	3	W/B	W/B	L-858B	4	2	2	5
6	1042.80	50.00P	6	3	W/B	W/B	L-858B	4	2	2	6
7	1347.60	50.00L	5	4	W/B	W/B	L-858B	4	2	2	5
8	1347.60	50.00P	5	4	W/B	W/B	L-858B	4	2	2	6
9	1652.40	50.00L	4	5	W/B	W/B	L-858B	4	2	2	5

PROPOSED SIGN SCHEDULE

	LOCATION		LEGEND		TYPE						
SIGN ID	STATION	OFFSET	FRONT	BACK	FRONT	BACK	TYPE	SIZE	CLASS	MODE	CIRCUIT
10	1652.40	50.00P	4	5	W/B	W/B	L-858B	4	2	2	6
11	1957.20	50.00L	3	6	W/B	W/B	L-858B	4	2	2	5
12	1957.20	50.00P	3	6	W/B	W/B	L-858B	4	2	2	6
13	2262.00	50.00L	2	7	W/B	W/B	L-858B	4	2	2	5
14	2262.00	50.00P	2	7	W/B	W/B	L-858B	4	2	2	6
15	2541.90	50.00L		C →	B	B/Y	L-858Y	3	2	2	5
16	2566.80	50.00L	1	8	W/B	W/B	L-858B	4	2	2	5
17	2566.80	50.00P	1	8	W/B	W/B	L-858B	4	2	2	6
18	2600.00	50.00L			Y/B	Y/B	L-858B	4	2	2	5
19	2600.00	50.00P			Y/B	Y/B	L-858B	4	2	2	6

US Army Corps of Engineers®

MARK	DESCRIPTION	DATE

ISSUE DATE: MARCH 2017
SOLICITATION NO.:
PROJECT NO.: PAY215002A

DESIGNED BY: K. LOPEREZ
DRAWN BY: L. LAWICKA
CHECKED BY: K. LEPERA
SUBMITTED BY: D. DIEHL
SIZE: ANSI D

U.S. ARMY CORPS OF ENGINEERS
KONRAD ADENAUER RING 39
WIESBADEN, D-65187 / GERMANY

AECOM INTERNATIONAL, INC.
SIEMENSSTRAGE 10
NEU-ISENBURG, 63263

ERI: IMPROVE SUPPORT INFRASTRUCTURE
ŁASK AB, POLAND

SIGN LOCATION PLAN & SCHEDULE
PLAN I TABLICA USYTUOWANIA ZNAKÓW

SHEET ID
E-410

C:\PWWORKING\AECOM_EU\MAREK.TARKOWSKI\D0159839\15-D-0008-0003EEA410.DWG
5/13/2016 MAREK.TARKOWSKI 1:2500 & 1:2500

100%

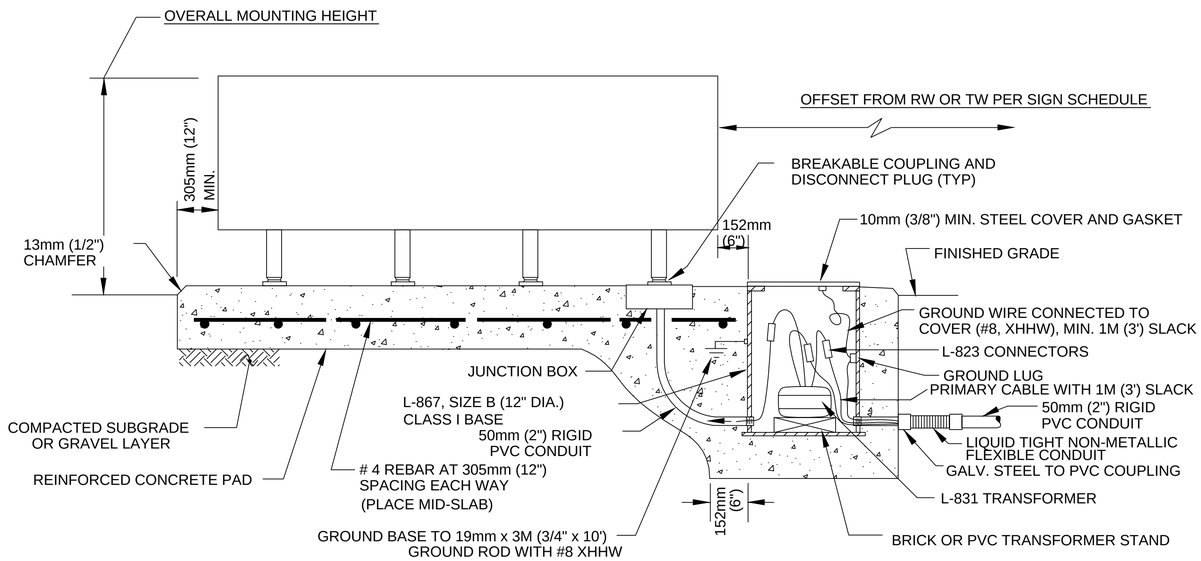

1 / E-411 DETAIL - RUNWAY DISTANCE MARKER/TAXIWAY GUIDANCE SIGN - PER SPECIFICATIONS
NOT TO SCALE

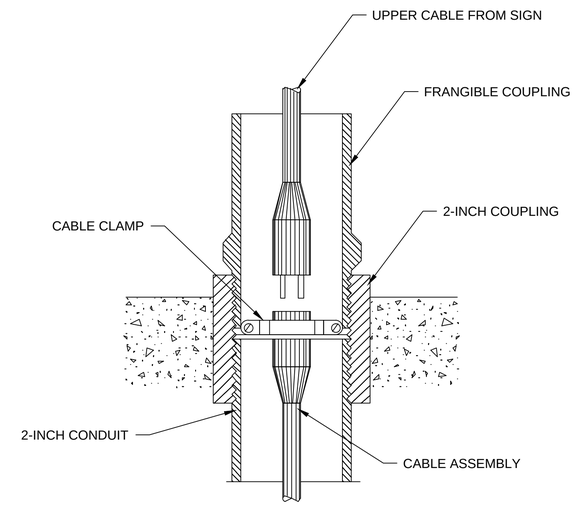

2 / E-411 DETAIL - GUIDANCE SIGN FRANGIBLE COUPLING CONNECTION
NOT TO SCALE

NOTES:

1. FOR SIGN SCHEDULE REFER TO SHEET E-410.
2. DO NOT CONNECT COUNTERPOISE ABOVE CONDUIT LEADING TO SIGN TO THE BASE. CONNECT COUNTERPOISE TO SEPARATE GROUND ROD.
3. FOUNDATION: THICKNESS = 305MM (12")
   WIDTH = MIN. 1M (3'). PROVIDE 305MM (12") CLEAR ON ALL SIDES OF SIGN.
   SLOPE FOUNDATION SURFACE TO DRAIN AWAY FROM SIGN, APPROX. 2% (1/4"/FT)
4. MAXIMUM OVERALL SIGN LENGTH:
5. PROVIDE TETHERS, MINIMUM 2 PER SIGN.
6. CONSIDER 76MM (3") ASPHALT OR 102 (4") GRAVEL STRIP, 1M (3') WIDE AROUND FOUNDATION FOR PROTECTION FROM MOWERS.
7. CONCRETE FOUNDATION SHALL BE FLUSH WITH FINISHED GRADE.

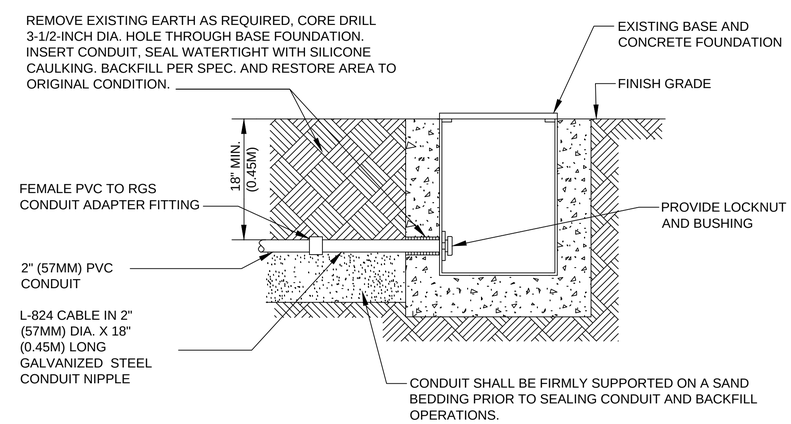

3 / E-521 DETAIL - NEW CONDUIT INTO EXISTING BASE
NOT TO SCALE

US Army Corps of Engineers®

MARK	DESCRIPTION	DATE

DESIGNED BY: K. LOPEZ
DRAWN BY: L. LAWICKA
CHECKED BY: K. LEPERA
SUBMITTED BY: D. DIEHL
SIZE: ANSI D
ISSUE DATE: MARCH 2017
SOLICITATION NO.:
PROJECT NO.: PAY215002A

U.S. ARMY CORPS OF ENGINEERS
KONRAD ADENAUER RING 39
WIESBADEN, D-65187 / GERMANY

AECOM INTERNATIONAL, INC.
SIEMENSSTRAGE 10
NEU-ISENBURG, 63263

ERI: IMPROVE SUPPORT INFRASTRUCTURE
ŁASK AB, POLAND

SIGN DETAILS
ZNAKI - SZCZEGÓŁY

SHEET ID
E-411

C:\PWWORKING\AECOM_EU\LLAWICKA\D0159839\15-D-0008-0003EEA507.DWG
5/13/2016 LUCYNA.LAWICKA SCALE: NTS
100%

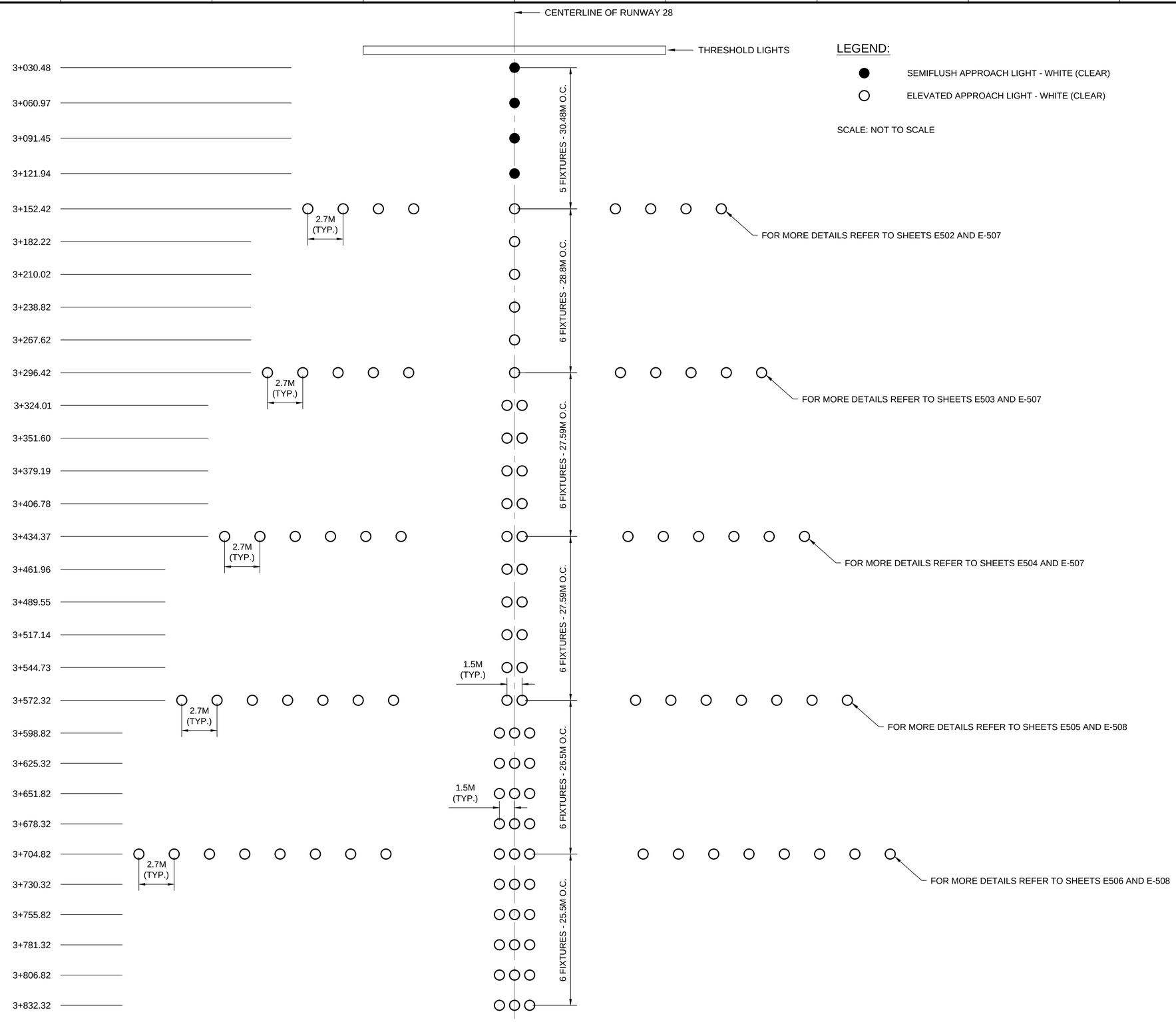

US Army Corps of Engineers®

MARK	DESCRIPTION	DATE

DESIGNED BY: K. LORENZ
DRAWN BY: L. ŁAWICKA
CHECKED BY: K. LEPERA
SUBMITTED BY: D. DIEHL
SIZE: ANSI D
ISSUE DATE: MARCH 2017
SOLICITATION NO.:
PROJECT NO.: PAY215002A

U.S. ARMY CORPS OF ENGINEERS
KONRAD ADENAUER RING 39
WIESBADEN, D-65187 / GERMANY

AECOM INTERNATIONAL, INC.
SIEMENSSTRAGE 10
NEU-ISENBURG, 63263

ERI: IMPROVE SUPPORT INFRASTRUCTURE
ŁASK AB, POLAND

APPROACH LIGHTS - DETAILS 1
ŚWIATŁA PODEJŚCIA - SZCZEGÓŁY 1

SHEET ID
E-501

C:\PWWORKING\AECOM_EU\LLAWICKA\D0159839\15-D-0008-0003EEA507.DWG
5/13/2016 LUCYNA.LAWICKA SCALE: NTS

100%

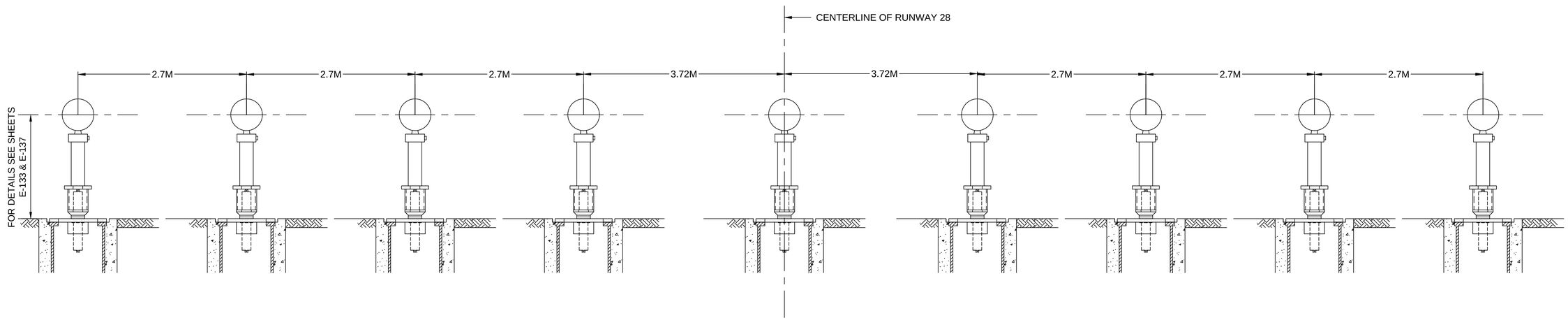

1 / E-502 BAR AT STA. 3+152 ELEVATION VIEW
NOT TO SCALE

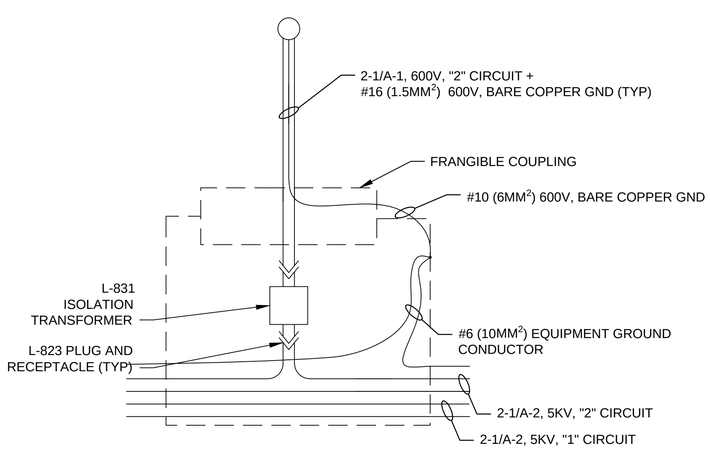

2 / E-502 WIRING DIAGRAM
NOT TO SCALE

US Army Corps of Engineers®

MARK	DESCRIPTION	DATE

DESIGNED BY: K. LOPEZ
DRAWN BY: L. LAWICKA
CHECKED BY: K. LEPERA
SUBMITTED BY: D. DIEHL
SIZE: ANSI D
ISSUE DATE: MARCH 2017
SOLICITATION NO.:
PROJECT NO.: PAY215002A

U.S. ARMY CORPS OF ENGINEERS
KONRAD ADENAUER RING 39
WIESBADEN, D-65187 / GERMANY

AECOM INTERNATIONAL, INC.
SIEMENSSTRAGE 10
NEU-ISENBURG, 63263

ERI: IMPROVE SUPPORT INFRASTRUCTURE
ŁASK AB, POLAND

BAR AT STA. 3+152 - DETAILS
POPRZECZKA W KM 3+152 - SZCZEGÓŁY

SHEET ID
E-502

C:\PWWORKING\AECOM_EU\LLAWICKA\D0159839\15-D-0008-0003EEA507.DWG
5/13/2016 LUCYNA.LAWICKA SCALE: NTS

100%

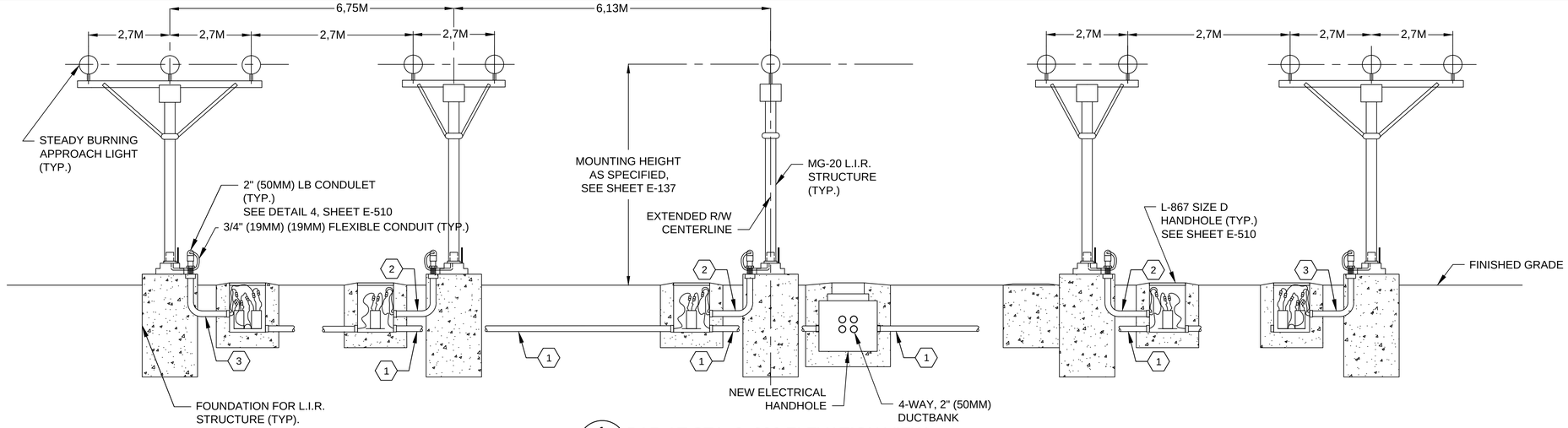

1 E-503 BAR AT STA. 3+296 ELEVATION VIEW
NOT TO SCALE

KEYNOTES:

1. 2-1/A-2, 5KV, "1" CIRCUIT + 2-1/A-2, 5KV, "2" CIRCUIT + #6 (10MM^2) GND IN 2" (50MM) PVC CONDUIT
2. 2-1/A-1, 600V, "1" CIRCUIT + 2-1/A-2, 600V, "2" CIRCUIT + #10 (6MM^2) BARE COPPER GND IN CONDUIT TO LIGHT FIXTURES
3. 2-1/A-1, 600V, "1" CIRCUIT + 2-1/A-2, 600V, "2" CIRCUIT + #10 (6MM^2) BARE COPPER GND IN CONDUIT TO LIGHT FIXTURES

NOTES:

1. QUANTITY OF L-831 ISOLATION TRANSFORMERS PER WIRING DIAGRAMS, SHEET E-602.
2. SECONDARY CONDUCTORS SHALL BE INSTALLED FROM L-831 ISOLATION TRANSFORMERS IN BASE CAN UP TO LIGHT FIXTURES. ROUTE CONDUCTORS FROM EACH LIGHT FIXTURE TO THE ISOLATION TRANSFORMERS VIA T-BAR ASSEMBLY, MAST, 3/4" (19MM) FLEXIBLE CONDUIT, AND 2" (50MM) UNDERGROUND CONDUIT. PROVIDE LENGTH OF CONDUCTORS AS REQUIRED FOR THIS INSTALLATION. CONNECT CONDUCTORS TO ISOLATION TRANSFORMER VIA KD-500 SERIES CONNECTOR.
3. ELEVATION VIEW IS LOOKING AWAY FROM THE RUNWAY THRESHOLD. DETAIL IS NOT TO SCALE AND EQUIPMENT LOCATIONS ARE DIAGRAMMATIC IN NATURE.
4. A LAMP SHORTING DEVICE SHALL BE PROVIDED WHEN ONE ISOLATION TRANSFORMER IS USED FOR MULTIPLE LIGHT FIXTURES.
5. L-867 HANDHOLES SHALL BE INSTALLED NOT MORE THAN 3M FROM L.I.R. STRUCTURES.

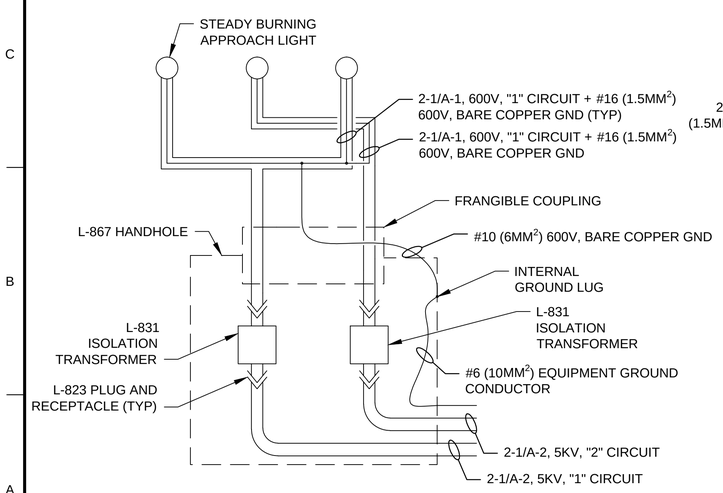

2 E-503 WIRING DIAGRAM - OUTER L.I.R. STRUCTURES
NOT TO SCALE

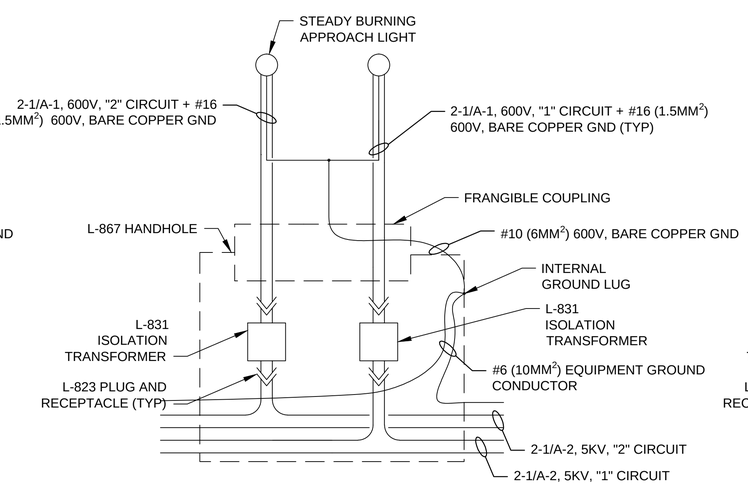

3 E-503 WIRING DIAGRAM - INNER L.I.R. STRUCTURES
NOT TO SCALE

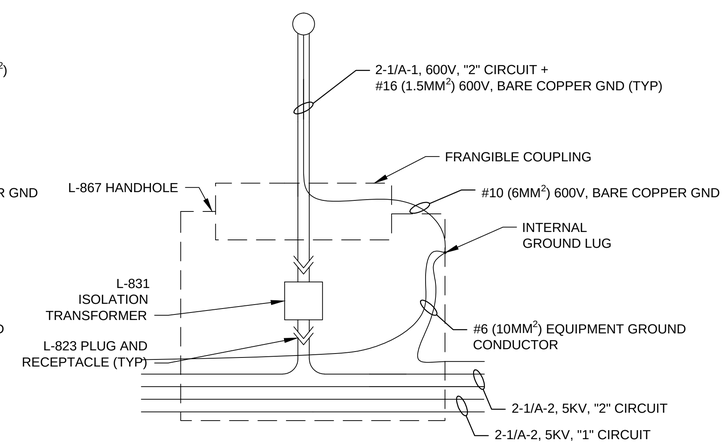

4 E-503 WIRING DIAGRAM - CENTER L.I.R. STRUCTURES
NOT TO SCALE

US Army Corps of Engineers®

MARK	DESCRIPTION	DATE

DESIGNED BY: K. LOPEZ
DRAWN BY: L. LAWICKA
CHECKED BY: K. LEPERA
SUBMITTED BY: D. DIEHL
SIZE: ANSI D
ISSUE DATE: MARCH 2017
SOLICITATION NO.:
PROJECT NO.: PAY215002A

U.S. ARMY CORPS OF ENGINEERS
KONRAD ADENAUER RING 39
WIESBADEN, D-65187 / GERMANY

AECOM INTERNATIONAL, INC.
SIEMENSSTRASE 10
NEU-ISENBURG, 63263

ERI: IMPROVE SUPPORT INFRASTRUCTURE
ŁASK AB, POLAND

BAR AT STA. 3+296 - DETAILS
POPRZECZKA W KM 3+296 - SZCZEGÓŁY

SHEET ID
E-503

C:\PWWORKING\AECOM_EU\LLAWICKA\D0159839\15-D-0008-0003EEA507.DWG
5/13/2016 LUCYNA.LAWICKA SCALE: NTS

100%

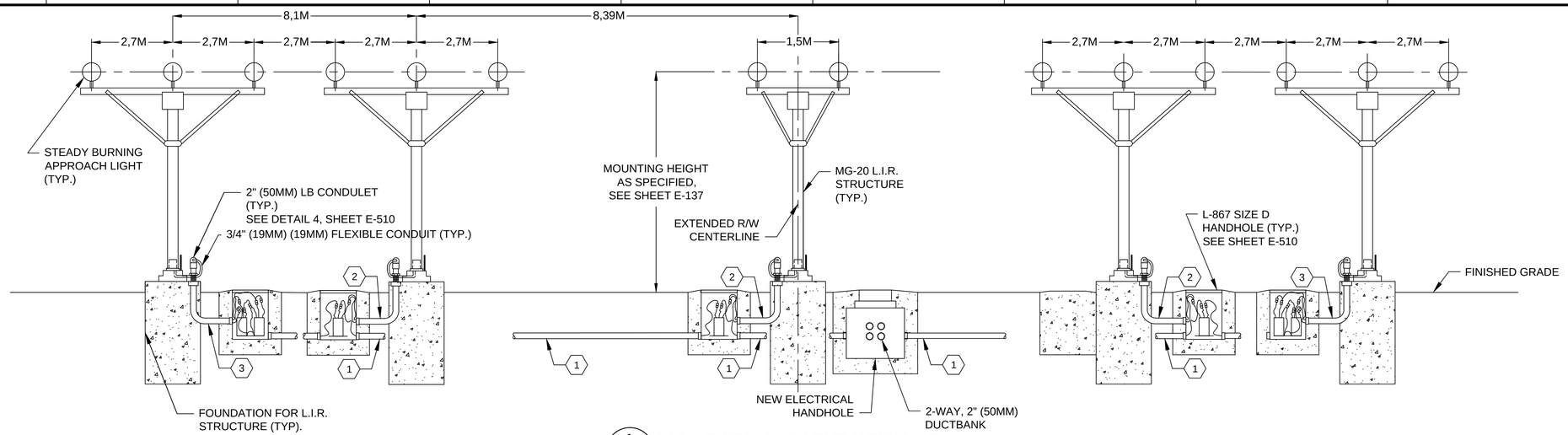

1 / E-504 BAR AT STA. 3+434 ELEVATION VIEW
NOT TO SCALE

KEYNOTES:

1. 2-1/A-2, 5KV, "1" CIRCUIT + 2-1/A-2, 5KV, "2" CIRCUIT + #6 (10MM^2) GND IN 2" (50MM) PVC CONDUIT
2. 2-1/A-1, 600V, "1" CIRCUIT + 2-1/A-2, 600V, "2" CIRCUIT + #10 (6MM^2) BARE COPPER GND IN CONDUIT TO LIGHT FIXTURES
3. 2-1/A-1, 600V, "1" CIRCUIT + 2-1/A-2, 600V, "2" CIRCUIT + #10 (6MM^2) BARE COPPER GND IN CONDUIT TO LIGHT FIXTURES

NOTES:

1. QUANTITY OF L-831 ISOLATION TRANSFORMERS PER WIRING DIAGRAMS, SHEET E-602.
2. SECONDARY CONDUCTORS SHALL BE INSTALLED FROM L-831 ISOLATION TRANSFORMERS IN BASE CAN UP TO LIGHT FIXTURES. ROUTE CONDUCTORS FROM EACH LIGHT FIXTURE TO THE ISOLATION TRANSFORMERS VIA T-BAR ASSEMBLY, MAST, 3/4" (19MM) FLEXIBLE CONDUIT, AND 2" (50MM) UNDERGROUND CONDUIT. PROVIDE LENGTH OF CONDUCTORS AS REQUIRED FOR THIS INSTALLATION. CONNECT CONDUCTORS TO ISOLATION TRANSFORMER VIA KD-500 SERIES CONNECTOR.
3. ELEVATION VIEW IS LOOKING AWAY FROM THE RUNWAY THRESHOLD. DETAIL IS NOT TO SCALE AND EQUIPMENT LOCATIONS ARE DIAGRAMMATIC IN NATURE.
4. A LAMP SHORTING DEVICE SHALL BE PROVIDED WHEN ONE ISOLATION TRANSFORMER IS USED FOR MULTIPLE LIGHT FIXTURES.
5. L-867 HANDHOLES SHALL BE INSTALLED NOT MORE THAN 3M FROM L.I.R. STRUCTURES.

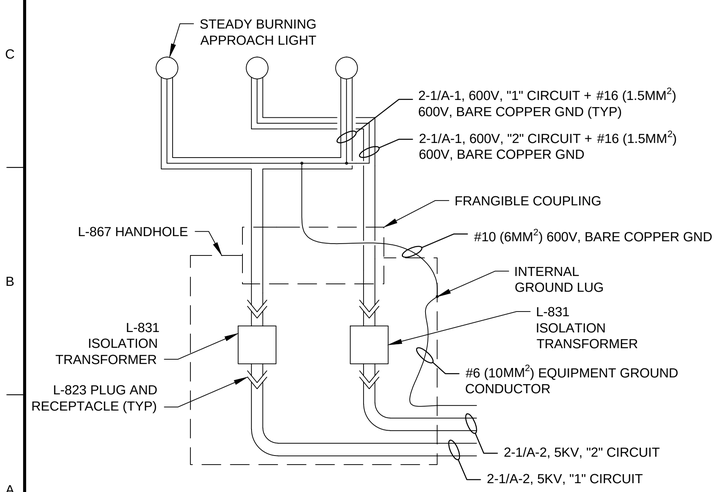

2 / E-504 WIRING DIAGRAM - OUTER L.I.R. STRUCTURES
NOT TO SCALE

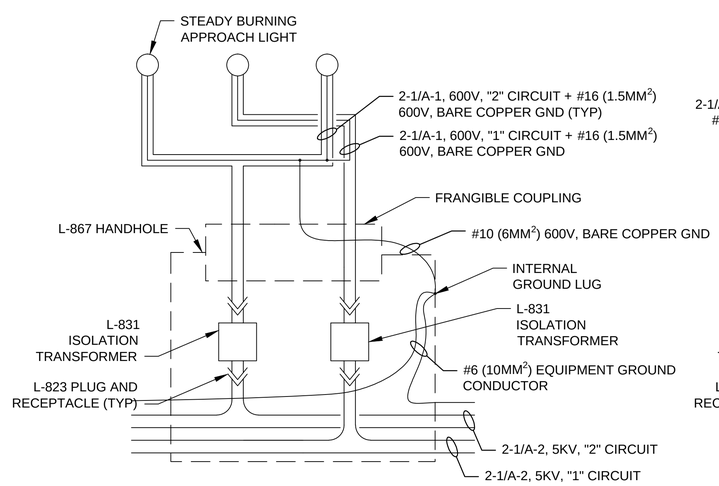

3 / E-504 WIRING DIAGRAM - INNER L.I.R. STRUCTURES
NOT TO SCALE

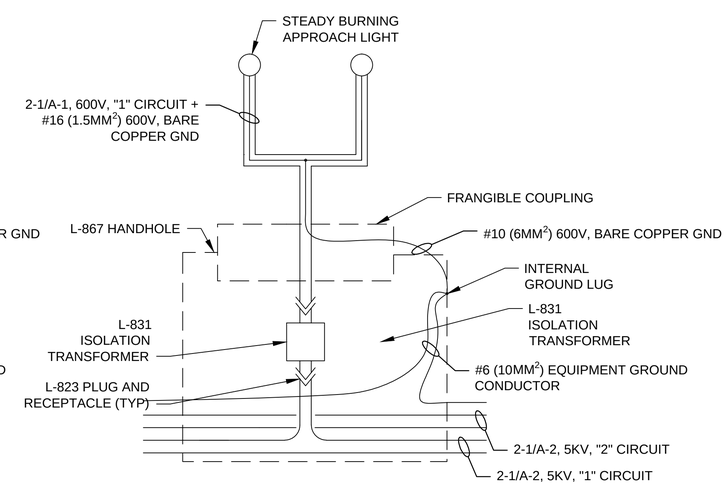

4 / E-504 WIRING DIAGRAM - CENTER L.I.R. STRUCTURES
NOT TO SCALE

US Army Corps of Engineers®

MARK	DESCRIPTION	DATE

DESIGNED BY: K. LOPEREZ
DRAWN BY: L. LAWICKA
CHECKED BY: K. LEPERA
SUBMITTED BY: D. DIEHL
SIZE: ANSI D
ISSUE DATE: MARCH 2017
SOLICITATION NO.:
PROJECT NO.: PAY215002A

U.S. ARMY CORPS OF ENGINEERS
KONRAD ADENAUER RING 39
WIESBADEN, D-65187 / GERMANY

AECOM INTERNATIONAL, INC.
SIEMENSSTRASE 10
NEU-ISENBURG, 63263

ERI: IMPROVE SUPPORT INFRASTRUCTURE
ŁASK AB, POLAND

BAR AT STA. 3+434 - DETAILS
POPRZECZKA W KM 3+434 - SZCZEGÓŁY

SHEET ID
E-504

C:\PWWORKING\AECOM_EU\LLAWICKA\D0159839\15-D-0008-0003EEA507.DWG
5/13/2016 LUCYNA.LAWICKA SCALE: NTS

100%

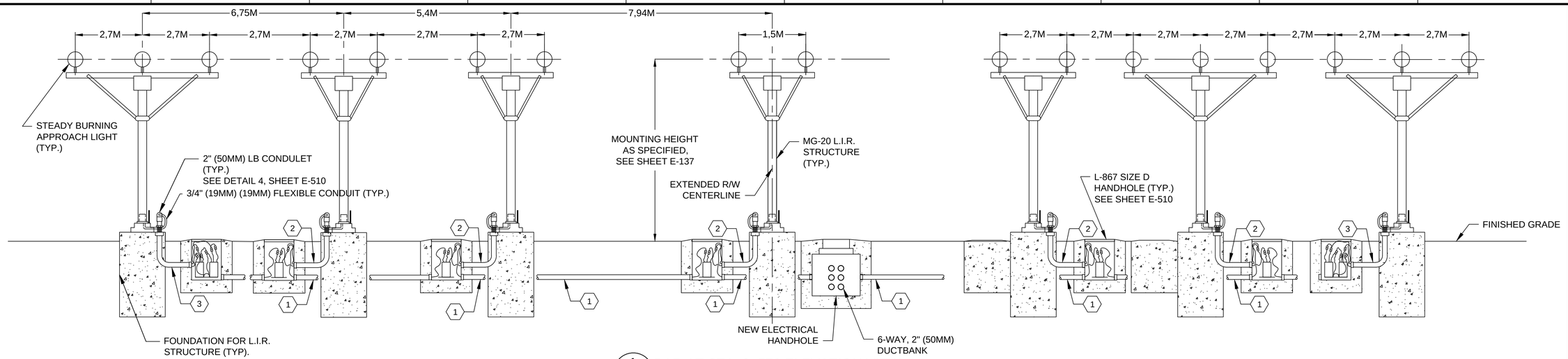

1 / E-505 BAR AT STA. 3+572 ELEVATION VIEW
NOT TO SCALE

KEYNOTES:

1. 2-1/A-2, 5KV, "1" CIRCUIT + 2-1/A-2, 5KV, "2" CIRCUIT + #6 (10MM^2) GND IN 2" (50MM) PVC CONDUIT
2. 2-1/A-1, 600V, "1" CIRCUIT + 2-1/A-2, 600V, "2" CIRCUIT + #10 (6MM^2) BARE COPPER GND IN CONDUIT TO LIGHT FIXTURES
3. 2-1/A-1, 600V, "1" CIRCUIT + 2-1/A-2, 600V, "2" CIRCUIT + #10 (6MM^2) BARE COPPER GND IN CONDUIT TO LIGHT FIXTURES

NOTES:

1. QUANTITY OF L-831 ISOLATION TRANSFORMERS PER WIRING DIAGRAMS, SHEET E-602.
2. SECONDARY CONDUCTORS SHALL BE INSTALLED FROM L-831 ISOLATION TRANSFORMERS IN BASE CAN UP TO LIGHT FIXTURES. ROUTE CONDUCTORS FROM EACH LIGHT FIXTURE TO THE ISOLATION TRANSFORMERS VIA T-BAR ASSEMBLY, MAST, 3/4" (19MM) FLEXIBLE CONDUIT, AND 2" (50MM) UNDERGROUND CONDUIT. PROVIDE LENGTH OF CONDUCTORS AS REQUIRED FOR THIS INSTALLATION. CONNECT CONDUCTORS TO ISOLATION TRANSFORMER VIA KD-500 SERIES CONNECTOR.
3. ELEVATION VIEW IS LOOKING AWAY FROM THE RUNWAY THRESHOLD. DETAIL IS NOT TO SCALE AND EQUIPMENT LOCATIONS ARE DIAGRAMMATIC IN NATURE.
4. A LAMP SHORTING DEVICE SHALL BE PROVIDED WHEN ONE ISOLATION TRANSFORMER IS USED FOR MULTIPLE LIGHT FIXTURES.
5. L-867 HANDHOLES SHALL BE INSTALLED NOT MORE THAN 3M FROM L.I.R. STRUCTURES.

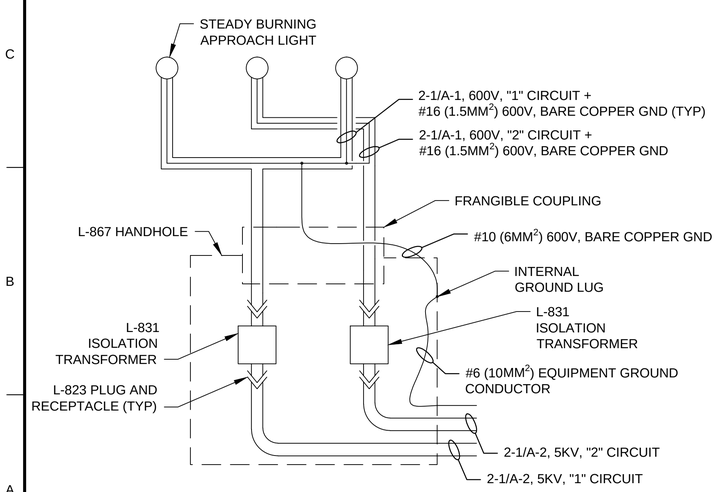

2 / E-505 WIRING DIAGRAM - OUTER L.I.R. STRUCTURES
NOT TO SCALE

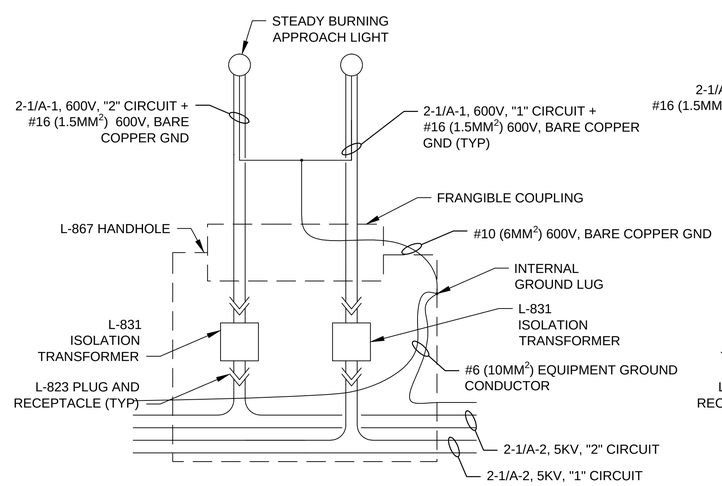

3 / E-505 WIRING DIAGRAM - INNER L.I.R. STRUCTURES
NOT TO SCALE

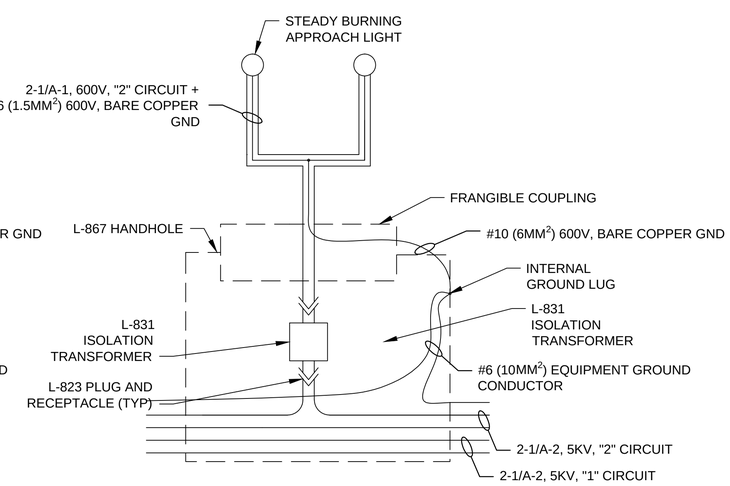

4 / E-505 WIRING DIAGRAM - CENTER L.I.R. STRUCTURES
NOT TO SCALE

US Army Corps of Engineers®

MARK	DESCRIPTION	DATE

DESIGNED BY: K. LOPEZ
DRAWN BY: L. LAWICKA
CHECKED BY: K. LEPERA
SUBMITTED BY: D. DIEHL
SIZE: ANSI D
ISSUE DATE: MARCH 2017
SOLICITATION NO.:
PROJECT NO.: PAY215002A

U.S. ARMY CORPS OF ENGINEERS
KONRAD ADENAUER RING 39
WIESBADEN, D-65187 / GERMANY

AECOM INTERNATIONAL, INC.
SIEMENSSTRASE 10
NEU-ISENBURG, 63263

ERI: IMPROVE SUPPORT INFRASTRUCTURE
ŁASK AB, POLAND

BAR AT STA. 3+572 - DETAILS
POPRZECZKA W KM 3+572 - SZCZEGÓŁY

SHEET ID
E-505

C:\PWWORKING\AECOM_EU\LLAWICKA\D0159839\15-D-0008-0003EEA507.DWG
5/13/2016 LUCYNA.LAWICKA SCALE: NTS

100%

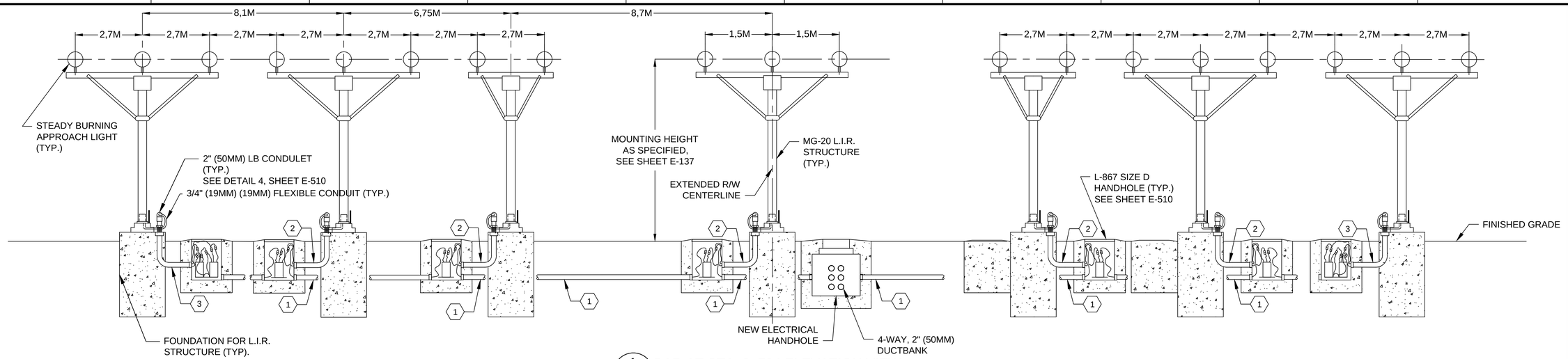

1 E-506 BAR AT STA. 3+704 ELEVATION VIEW
NOT TO SCALE

KEYNOTES:

1. 2-1/A-2, 5KV, "1" CIRCUIT + 2-1/A-2, 5KV, "2" CIRCUIT + #6 (10MM^2) GND IN 2" (50MM) PVC CONDUIT
2. 2-1/A-1, 600V, "1" CIRCUIT + 2-1/A-2, 600V, "2" CIRCUIT + #10 (6MM^2) BARE COPPER GND IN CONDUIT TO LIGHT FIXTURES
3. 2-1/A-1, 600V, "1" CIRCUIT + 2-1/A-2, 600V, "2" CIRCUIT + #10 (6MM^2) BARE COPPER GND IN CONDUIT TO LIGHT FIXTURES

NOTES:

1. QUANTITY OF L-831 ISOLATION TRANSFORMERS PER WIRING DIAGRAMS, SHEET E-602.
2. SECONDARY CONDUCTORS SHALL BE INSTALLED FROM L-831 ISOLATION TRANSFORMERS IN BASE CAN UP TO LIGHT FIXTURES. ROUTE CONDUCTORS FROM EACH LIGHT FIXTURE TO THE ISOLATION TRANSFORMERS VIA T-BAR ASSEMBLY, MAST, 3/4" (19MM) FLEXIBLE CONDUIT, AND 2" (50MM) UNDERGROUND CONDUIT. PROVIDE LENGTH OF CONDUCTORS AS REQUIRED FOR THIS INSTALLATION. CONNECT CONDUCTORS TO ISOLATION TRANSFORMER VIA KD-500 SERIES CONNECTOR.
3. ELEVATION VIEW IS LOOKING AWAY FROM THE RUNWAY THRESHOLD. DETAIL IS NOT TO SCALE AND EQUIPMENT LOCATIONS ARE DIAGRAMMATIC IN NATURE.
4. A LAMP SHORTING DEVICE SHALL BE PROVIDED WHEN ONE ISOLATION TRANSFORMER IS USED FOR MULTIPLE LIGHT FIXTURES.
5. L-867 HANDHOLES SHALL BE INSTALLED NOT MORE THAN 3M FROM L.I.R. STRUCTURES.

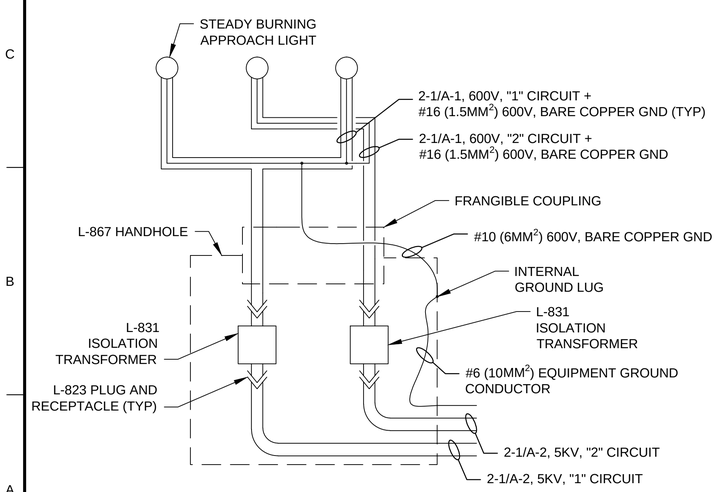

2 E-506 WIRING DIAGRAM - OUTER L.I.R. STRUCTURES
NOT TO SCALE

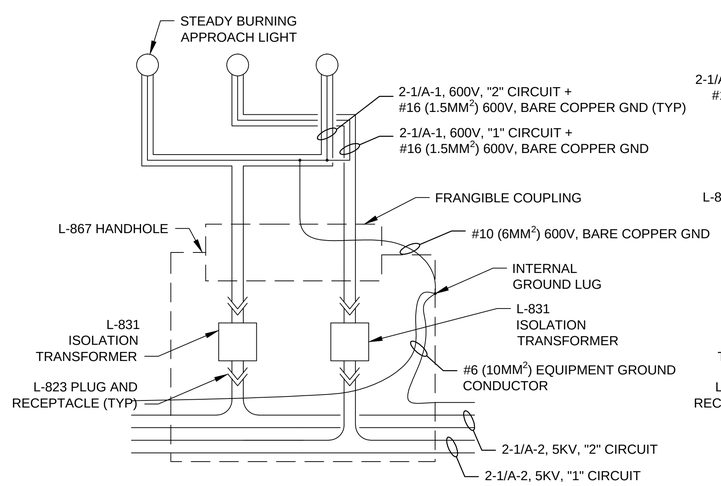

3 E-506 WIRING DIAGRAM - INNER L.I.R. STRUCTURES (3 FIXTURES)
NOT TO SCALE

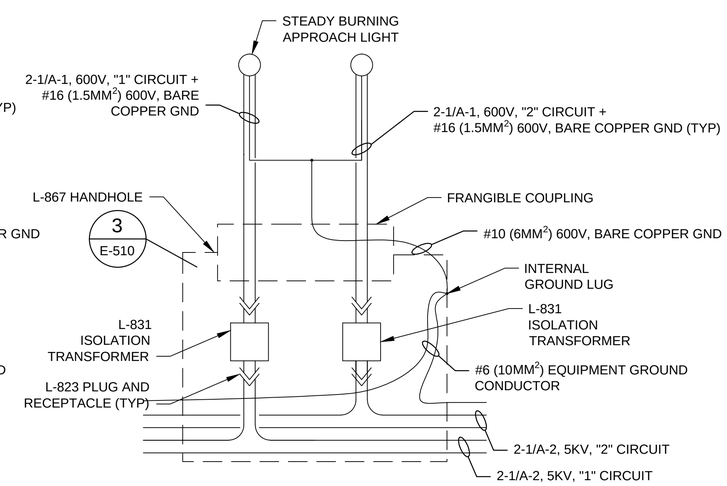

4 E-506 WIRING DIAGRAM - INNER L.I.R. STRUCTURES (2 FIXTURES)
NOT TO SCALE

US Army Corps of Engineers®

MARK	DESCRIPTION	DATE

DESIGNED BY: K. LOPEZ
DRAWN BY: L. LAWICKA
CHECKED BY: K. LEPERA
SUBMITTED BY: D. DIEHL
SIZE: ANSI D
ISSUE DATE: MARCH 2017
SOLICITATION NO.:
PROJECT NO.: PAY215002A

U.S. ARMY CORPS OF ENGINEERS
KONRAD ADENAUER RING 39
WIESBADEN, D-65187 / GERMANY

AECOM INTERNATIONAL, INC.
SIEMENSSTRASE 10
NEU-ISENBURG, 63263

ERI: IMPROVE SUPPORT INFRASTRUCTURE
ŁASK AB, POLAND

BAR AT STA. 3+704 - DETAILS
POPRZECZKA W KM 3+704 - SZCZEGÓŁY

SHEET ID
E-506

C:\PWWORKING\AECOM_EU\LLAWICKA\D0159839\15-D-0008-0003EEA507.DWG
5/13/2016 LUCYNA.LAWICKA SCALE: NTS

100%

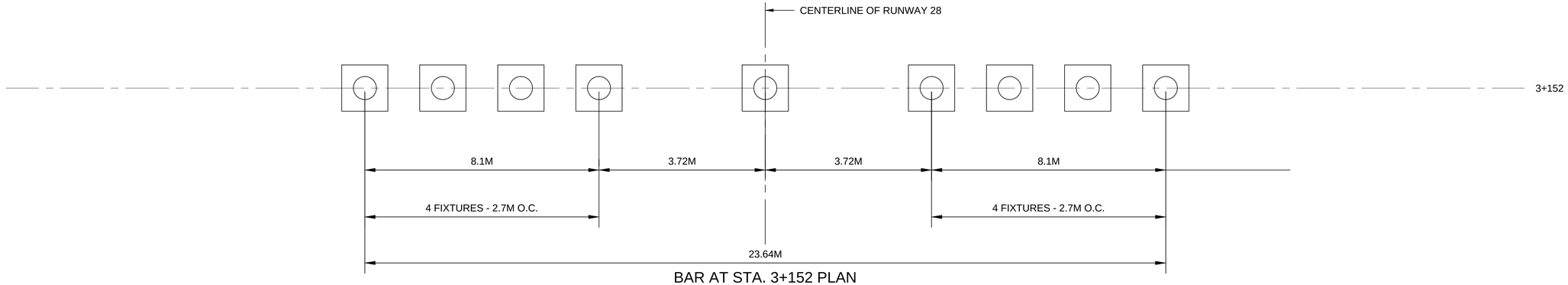

BAR AT STA. 3+152 PLAN

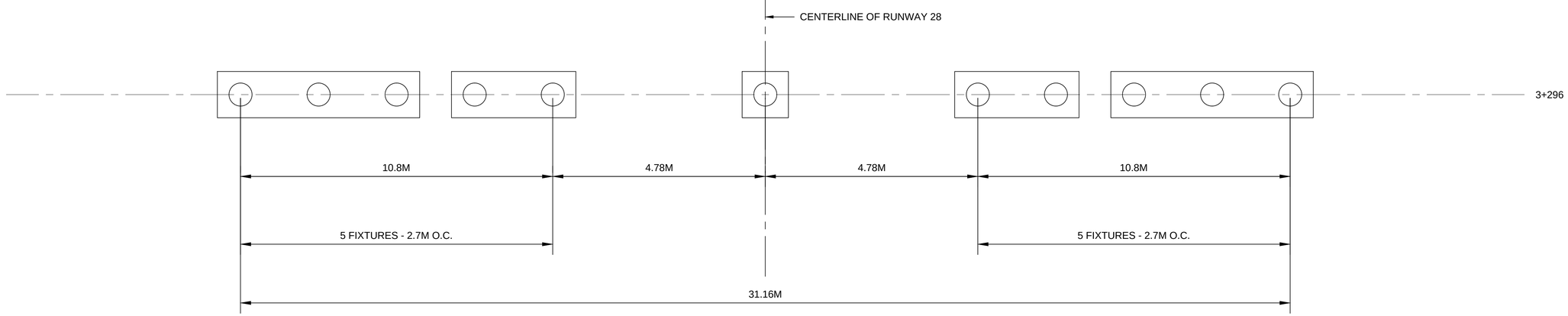

BAR AT STA. 3+296 PLAN

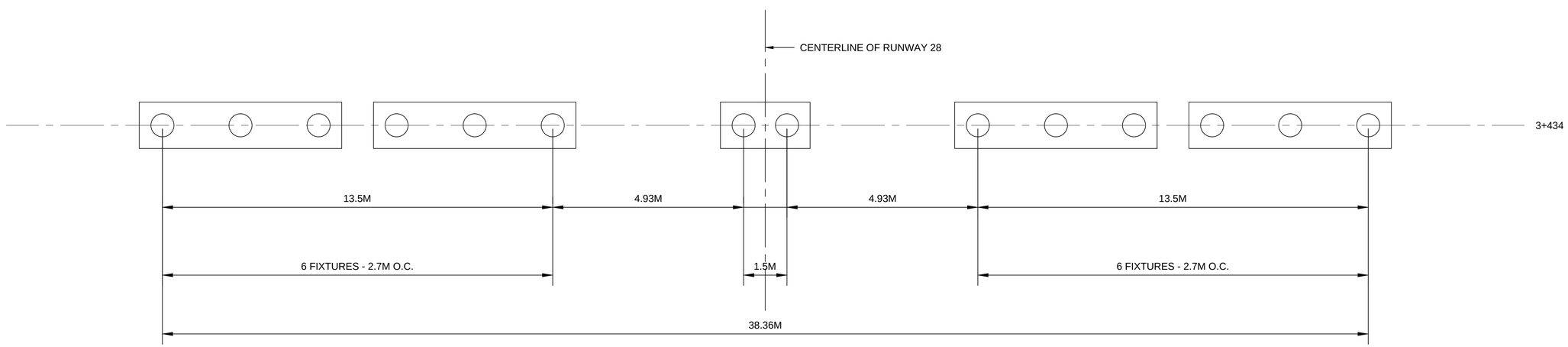

BAR AT STA. 3+434 PLAN

US Army Corps of Engineers®

MARK	DESCRIPTION	DATE

DESIGNED BY: K. LOPEZ
DRAWN BY: L. LAWICKA
CHECKED BY: K. LEPERA
SUBMITTED BY: D. DIEHL
SIZE: ANSI D
ISSUE DATE: MARCH 2017
SOLICITATION NO.:
PROJECT NO.: PAY215002A

U.S. ARMY CORPS OF ENGINEERS
KONRAD ADENAUER RING 39
WIESBADEN, D-65187 / GERMANY

AECOM INTERNATIONAL, INC.
SIEMENSSTRAGE 10
NEU-ISENBURG, 63263

ERI: IMPROVE SUPPORT INFRASTRUCTURE
ŁASK AB, POLAND

APPROACH BAR LIGHTS - DETAILS 1
POPRZECZKI ŚWIATEŁ PODEJŚCIA - SZCZEGÓŁY 1

SHEET ID
E-507

C:\PWWORKING\AECOM_EU\LLAWICKA\D0159839\15-D-0008-0003EEA507.DWG
5/13/2016 LUCYNA.LAWICKA SCALE: NTS

100%

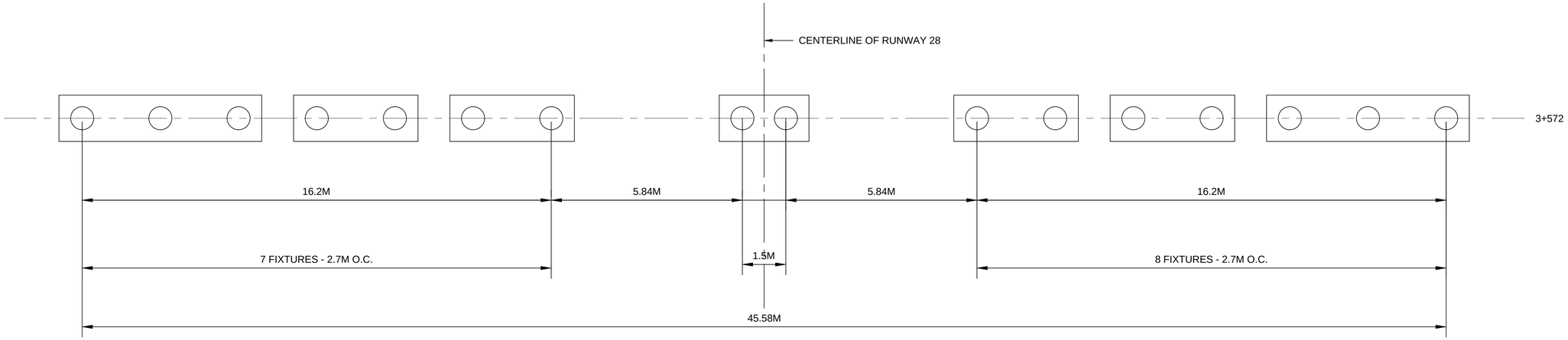

BAR AT STA. 3+572 PLAN

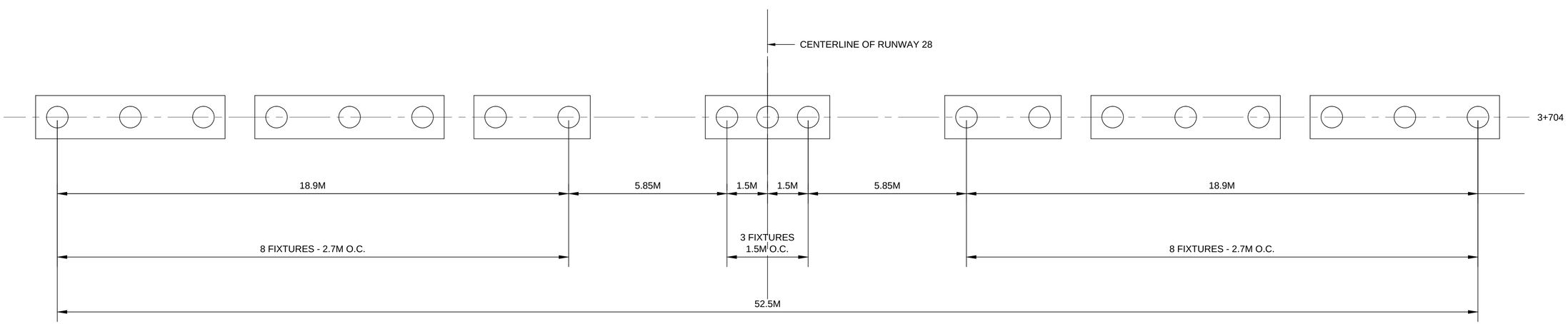

BAR AT STA. 3+704 PLAN

US Army Corps of Engineers®

MARK	DESCRIPTION	DATE

DESIGNED BY: K. LOPEZ
DRAWN BY: L. LAWICKA
CHECKED BY: K. LEPERA
SUBMITTED BY: D. DIEHL
SIZE: ANSI D
ISSUE DATE: MARCH 2017
SOLICITATION NO.:
PROJECT NO.: PAY215002A

U.S. ARMY CORPS OF ENGINEERS
KONRAD ADENAUER RING 39
WIESBADEN, D-65187 / GERMANY

AECOM INTERNATIONAL, INC.
SIEMENSSTRAGE 10
NEU-ISENBURG, 63263

ERI: IMPROVE SUPPORT INFRASTRUCTURE
ŁASK AB, POLAND

APPROACH BAR LIGHTS - DETAILS 2
POPRZECZKI ŚWIATEŁ PODEJŚCIA - SZCZEGÓŁY 2

SHEET ID
E-508

C:\PWWORKING\AECOM_EU\LLAWICKA\D0159839\15-D-0008-0003EEA507.DWG
5/13/2016 LUCYNA.LAWICKA SCALE: NTS

100%

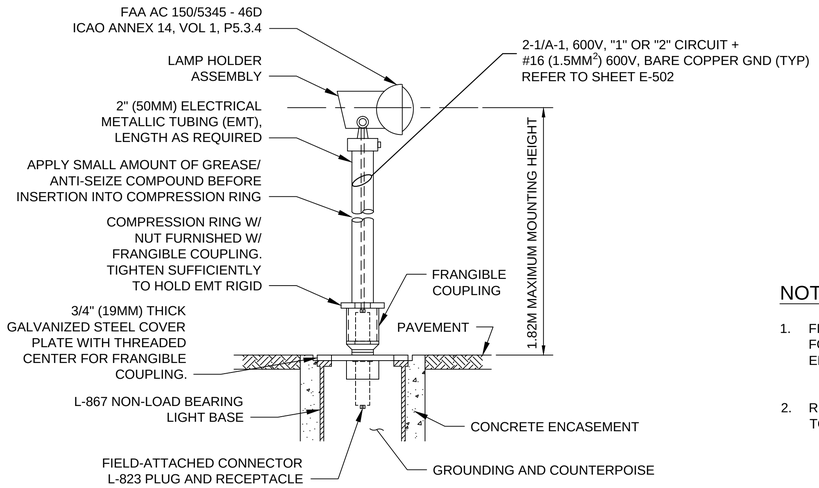

1 / E-509 DETAIL - TYP HIGH INTENSITY ELEVATED APPROACH LIGHT
NOT TO SCALE

NOTES:

1. FINAL MOUNTING HEIGHT OF LIGHT FIXTURE SHALL BE AS SPECIFIED. REFER TO SHEET E-137 FOR DETAILS. CONTRACTOR IS RESPONSIBLE FOR SIZING NECESSARY LENGTH OF EMT TO ENSURE PROPER MOUNTING HEIGHT OF FIXTURES.

2. REFER TO SHEET E-137 FOR PROPOSED LIGHT FIXTURE STATION NUMBERS. CONSTRUCTION TOLERANCES FOR AIMING ANGLES ARE ±0.2 DEGREES.

US Army Corps of Engineers®

MARK	DESCRIPTION	DATE

DESIGNED BY: K. LOPEZ
DRAWN BY: L. LAWICKA
CHECKED BY: K. LEPERA
SUBMITTED BY: D. DIEHL
SIZE: ANSI D
ISSUE DATE: MARCH 2017
SOLICITATION NO.:
PROJECT NO.: PAY215002A

U.S. ARMY CORPS OF ENGINEERS
KONRAD ADENAUER RING 39
WIESBADEN, D-65187 / GERMANY

AECOM INTERNATIONAL, INC.
SIEMENSSTRAGE 10
NEU-ISENBURG, 63263

ERI: IMPROVE SUPPORT INFRASTRUCTURE
ŁASK AB, POLAND

APPROACH LIGHTS - DETAILS 2
ŚWIATŁA PODEJŚCIA - SZCZEGÓŁY 2

SHEET ID
E-509

C:\PWWORKING\AECOM_EU\LLAWICKA\D0159839\15-D-0008-0003EEA507.DWG
5/13/2016 LUCYNA.LAWICKA SCALE: NTS
100%

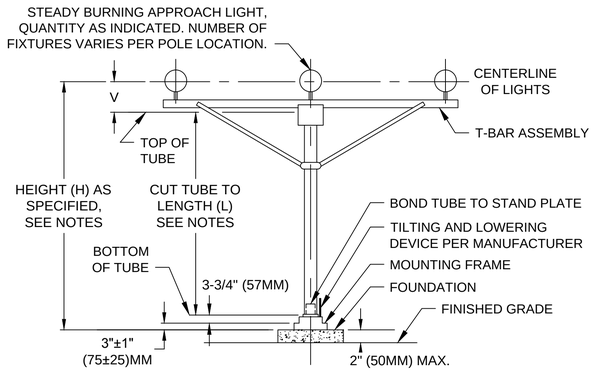

1 / E-510 TYP MG-20 L.I.R. STRUCTURE
NOT TO SCALE

NOTES:

1. MG-20 L.I.R. STRUCTURES SHALL BE INSTALLED AT APPROACH LIGHT CROSSBAR, OUTSIDE OF THE PAVED AREA, AT LOCATIONS INDICATED ON THE DRAWINGS.

2. NO COLOR FILTER SHALL BE PROVIDED FOR ELEVATED LIGHTS. A LAMP SHORTING DEVICE SHALL BE PROVIDED WHEN ONE ISOLATION TRANSFORMER IS USED FOR MULTIPLE LIGHT FIXTURES.

3. THE FINAL ELEVATION OF STEADY-BURNING LIGHT FIXTURES AT EVERY CROSSBAR SHALL COMPLY WITH SHEET E-137. THE CONTRACTOR IS RESPONSIBLE FOR SIZING NECESSARY LENGTH OF TUBE TO ENSURE PROPER MOUNTING HEIGHT OF FIXTURES FROM FINAL GRADE. LENGTH OF TUBE SHALL BE DETERMINED AS FOLLOWS:

   L = H - V - 6.75"

   WHERE:
   L = LENGTH OF TUBE REQUIRED
   H = LIGHT MOUNTING HEIGHT
   V = DISTANCE FROM CENTERLINE OF LIGHT FIXTURE TO TOPE OF FIBERGLASS TUBE. THIS DISTANCE MUST BE DETERMINED USING ACTUAL HARDWARE TO BE INSTALLED.

4. PROVIDE A PORTABLE WINCH TILT DEVICE FOR LOWERING L.I.R. STRUCTURE.

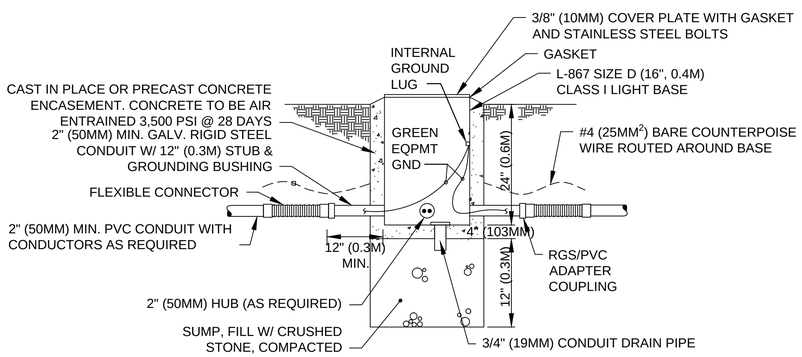

2 / E-510 L-867 SIZE D HANDHOLE (ELEC JUNCTIONBOX)
NOT TO SCALE

NOTES:

1. THE EQUIPMENT GROUND SHALL BE ROUTED WITH THE SYSTEM CONDUCTORS IN THE CONDUIT AND CONNECTED TO THE GROUND LUG IN EACH LIGHT BASE. IT SHALL ALSO BE BONDED TO THE ELECTRICAL GROUND AT THE SYSTEM'S SUBSTATION (VAULT) POWER SUPPLY GROUND BUS.

2. THE FLEXIBLE CONNECTOR SHALL BE LIQUID TIGHT NON-METALLIC.

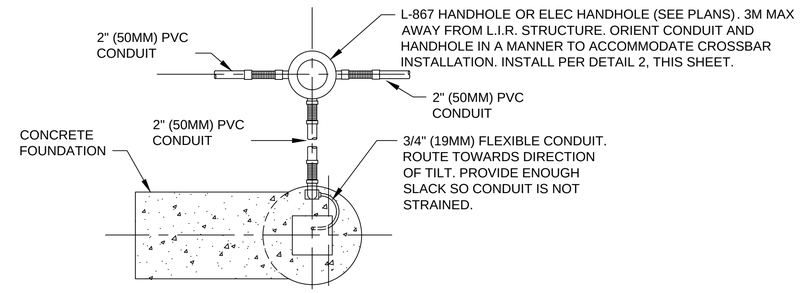

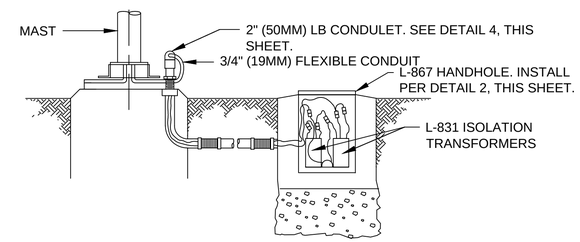

3 / E-510 TYP MG-20 L.I.R. STRUCTURE TOWER WIRING DETAIL
NOT TO SCALE

NOTES:

1. SECONDARY CONDUCTORS SHALL BE INSTALLED FROM L-831 ISOLATION TRANSFORMERS IN BASE CAN UP TO LIGHT FIXTURES. ROUTE CONDUCTORS FROM EACH LIGHT FIXTURE TO THE ISOLATION TRANSFORMERS VIA T-BAR ASSEMBLY, MAST, 3/4" (19MM) FLEXIBLE CONDUIT, AND 2" (50MM) UNDERGROUND CONDUIT. PROVIDE LENGTH OF CONDUCTORS AS REQUIRED FOR THIS INSTALLATION. CONNECT CONDUCTORS TO ISOLATION TRANSFORMER VIA KD-500 SERIES CONNECTOR.

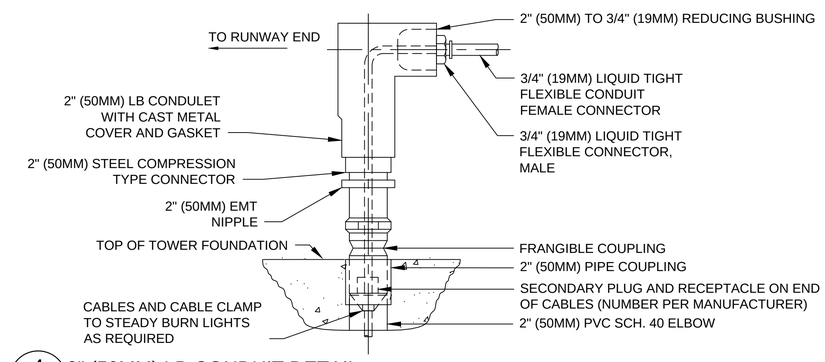

4 / E-510 2" (50MM) LB CONDUIT DETAIL
NOT TO SCALE

NOTES:

1. PROVIDE NUMBER OF CABLES AS REQUIRED. REFER TO SYSTEM WIRING DIAGRAMS.

2. FACE CONDULET AWAY FROM RUNWAY END AND TOWARD APPROACH.

US Army Corps of Engineers®

MARK	DESCRIPTION	DATE

DESIGNED BY: K. LOPEZ
DRAWN BY: L. LAWICKA
CHECKED BY: K. LEPERA
SUBMITTED BY: D. DIEHL
SIZE: ANSI D
ISSUE DATE: MARCH 2017
SOLICITATION NO.:
PROJECT NO.: PAY215002A

U.S. ARMY CORPS OF ENGINEERS
KONRAD ADENAUER RING 39
WIESBADEN, D-65187 / GERMANY

AECOM INTERNATIONAL, INC.
SIEMENSSTRAGE 10
NEU-ISENBURG, 63263

ERI: IMPROVE SUPPORT INFRASTRUCTURE
ŁASK AB, POLAND

APPROACH LIGHTS - DETAILS 3
ŚWIATŁA PODEJŚCIA - SZCZEGÓŁY 3

SHEET ID
E-510

C:\PWWORKING\AECOM_EU\LLAWICKA\D0159839\15-D-0008-0003EEA507.DWG
5/13/2016 LUCYNA.LAWICKA SCALE: NTS

100%

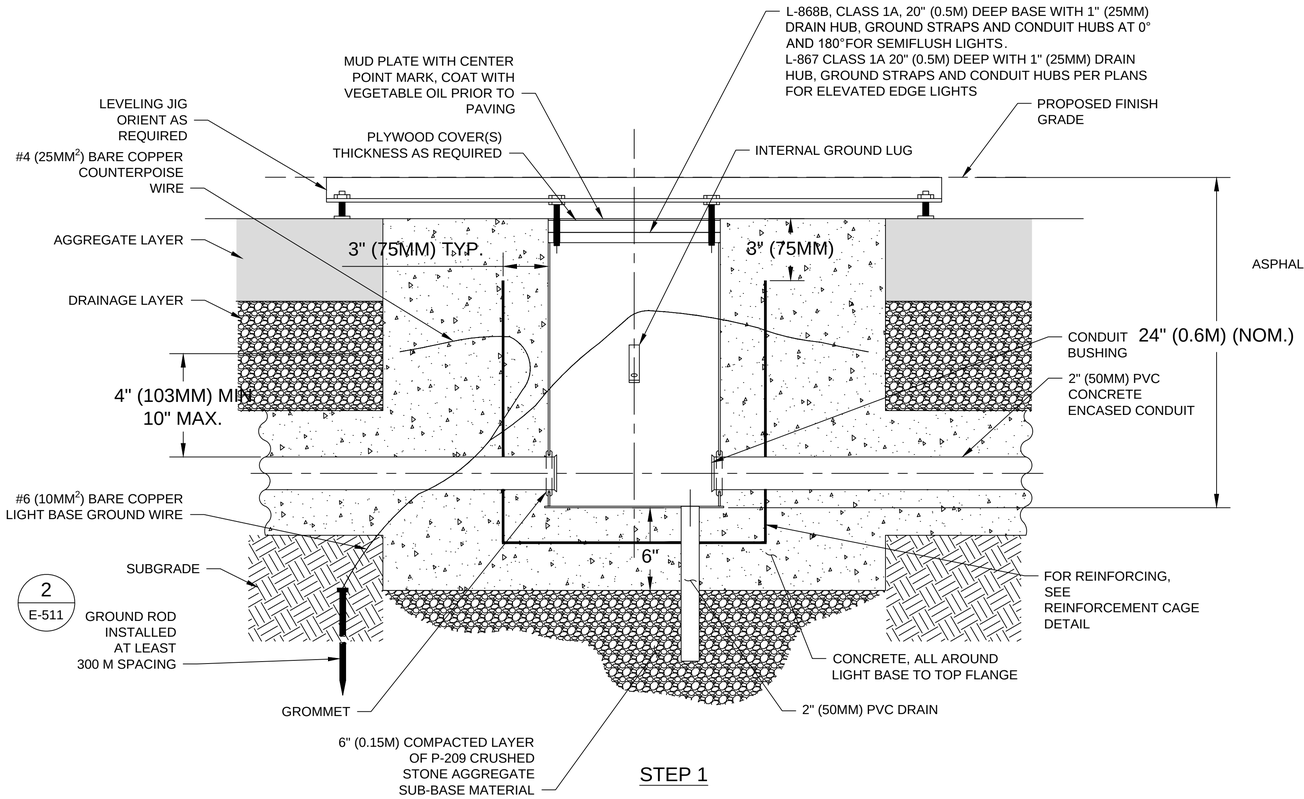

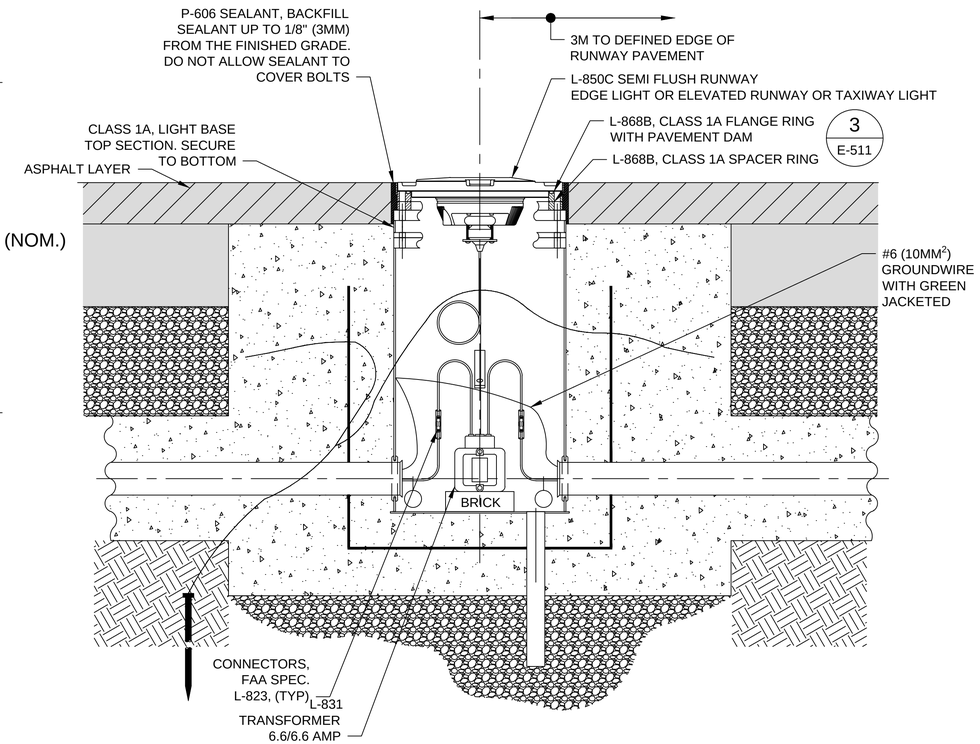

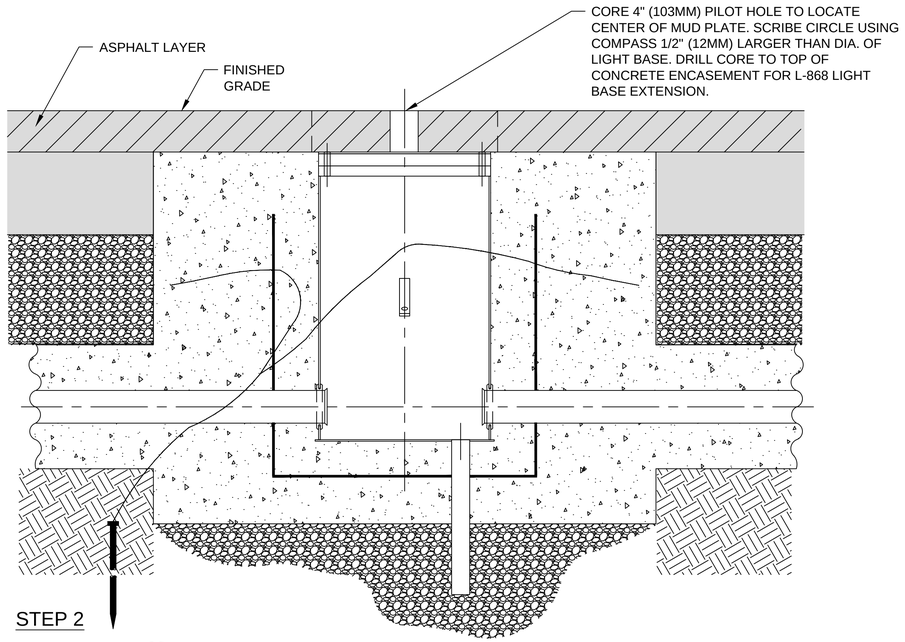

1 E-511 DETAIL - RUNWAY ELEVATED OR IN-PAVEMENT LIGHT INSTALLATION IN NEW PAVEMENT
NOT TO SCALE

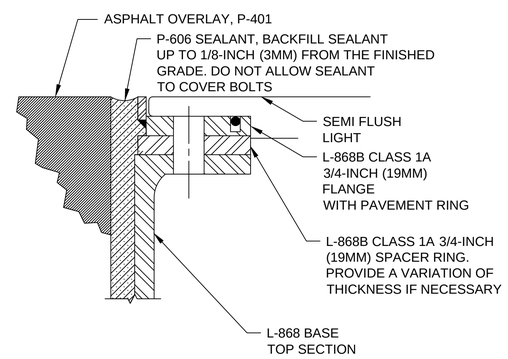

NOTES:

1. DEPTH OF P-606 SEALANT SHALL BE EQUAL TO L-868 LIGHT BASE TOP SECTION HEIGHT.
2. CONTRACTOR SHALL HAVE A SUPPLY OF SPACER RINGS WITH DIFFERENT THICKNESSES TO ACCOMMODATE VARYING ASPHALT OVERLAY THICKNESSES.

4 E-511 DETAIL - B - SEMI FLUSH LIGHT
NOT TO SCALE

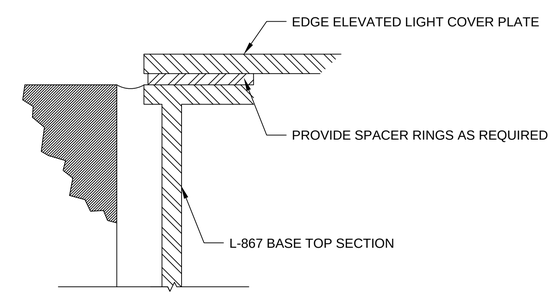

NOTES:

1. CONTRACTOR SHALL HAVE A SUPPLY OF SPACER RINGS WITH DIFFERENT THICKNESSES TO ACCOMMODATE VARYING ASPHALT OVERLAY THICKNESSES.

5 E-511 DETAIL - C - ELEVATED LIGT
NOT TO SCALE

US Army Corps of Engineers®

MARK	DESCRIPTION	DATE

DESIGNED BY: K. LOPEZ
DRAWN BY: L. LAWICKA
CHECKED BY: K. LEPERA
SUBMITTED BY: D. DIEHL
SIZE: ANSI D
ISSUE DATE: MARCH 2017
SOLICITATION NO.:
PROJECT NO.: PAY215002A

U.S. ARMY CORPS OF ENGINEERS
KONRAD ADENAUER RING 29
WIESBADEN, D-65187 / GERMANY

AECOM INTERNATIONAL, INC.
SIEMENSSTRAGE 10
NEU-ISENBURG, 63263

ERI: IMPROVE SUPPORT INFRASTRUCTURE
ŁASK AB, POLAND

SEMIFLUSH & ELEVATED LIGHTS - DETAILS
ŚWIATŁA ZAGŁĘBIONE I WYNIESIONE - SZCZEGÓŁY

SHEET ID
E-511

C:\PWWORKING\AECOM_EU\LLAWICKA\D0159839\15-D-0008-0003EEA507.DWG
5/13/2016 LUCYNA.LAWICKA SCALE: NTS

100%

EXISTING VAULT PLAN

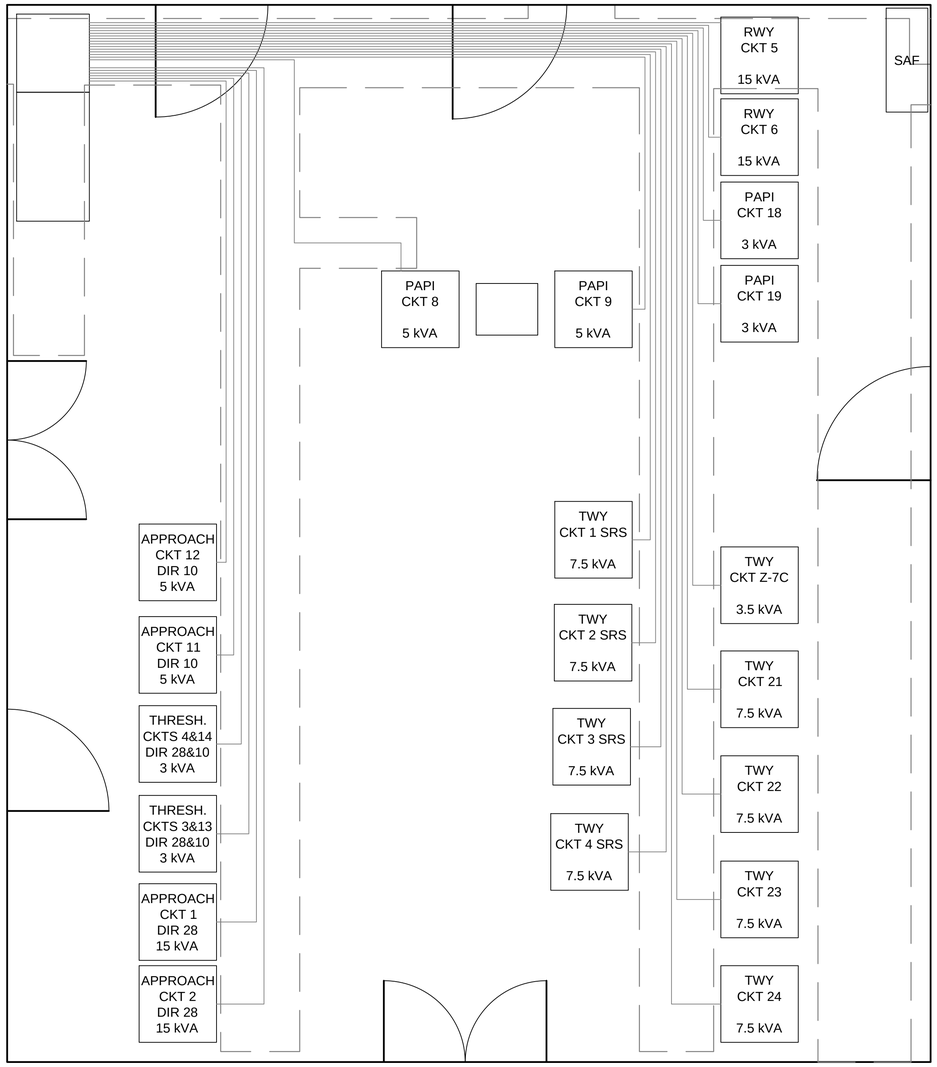

PROPOSED VAULT PLAN

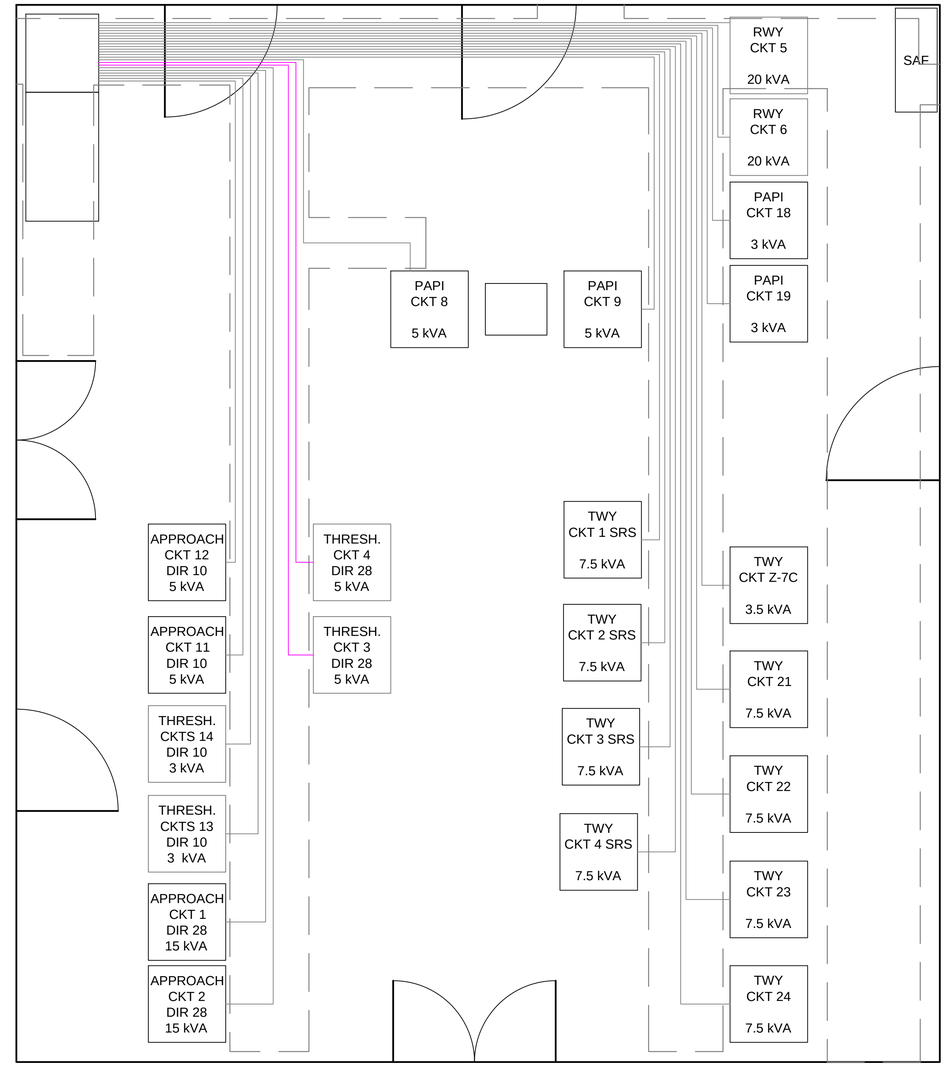

CKT No.	Regulator (CCR)	Designed CCR Rating @ .9 PF	Cable YKY 4x10mm2 Length	Cable YKY 4x25mm2 Length	Fuse switch disconnector
	(Runway or Taxiway, etc.)	kVA	m	m	A
5	Runway 10-28 Edge, End & IRDM	20,0	-	10	100
6	Runway 10-28 Edge, End & IRDM	20,0	-	11	100
3	Runway 10-28 Threshold	5,0	10	-	35
4	Runway 10-28 Threshold	5,0	9	-	35
1	Runway 10-28 Approach	15,0	existing	existing	existing
2	Runway 10-28 Approach	15,0	existing	existing	existing
21	Runway 10-28 Taxiway	7,5	existing	existing	existing
22	Runway 10-28 Taxiway	7,5	existing	existing	existing

TYPICAL CCR DIMENSIONS: 0,6M X 0,6M, INPUT ACTUAL SIZE AFTER CHOOSING CCR PROVIDER

STANDARDOWY WYMIAR REGULATORA: 0,6M X 0,6M, DOKŁADNY WYMIAR SKORYGOWAĆ PO WYBORZE DOSTAWCY URZĄDZEŃ

NOTES:

CCR NO.	COMMENT
5	REMOVE EXISTING CCR AND INSTALL NEW 20 KVA CCR *PROPOSAL TO USE DISMANTLED CONTROLLER FOR CIRCUIT NO. 1
6	REMOVE EXISTING CCR AND INSTALL NEW 20 KVA CCR *PROPOSAL TO USE DISMANTLED CONTROLLER FOR CIRCUIT NO. 2
3	INSTALL NEW 5 KVA CCR EXISTING CCR, WORKING FOR BOTH 28&10 DIR WILL REMAIN FOR THE 10 DIR
4	INSTALL NEW 5 KVA CCR EXISTING CCR, WORKING FOR BOTH 28&10 DIR WILL REMAIN FOR THE 10 DIR
1	EXISTING 15 KVA CCR *PROPOSAL TO REMOVE THE CCR NO. 1 (ADB/SIEMENS) AND INSTALL CCR NO. 5 ON THE CIRCUIT NO. 1, FOR SAFETY REASONS, SEE BELOW
2	EXISTING 15 KVA CCR *PROPOSAL TO REMOVE THE CCR NO. 2 (ADB/SIEMENS) AND INSTALL CCR NO. 6 ON THE CIRCUIT NO. 2, FOR SAFETY REASONS, SEE BELOW
21	NO CHANGES
22	NO CHANGES

*EXISTING REGULATORS OF ADB.SIEMENS OUT OF PRODUCTION, NOT ALL SPARE PARTS TO REGULATORS ARE AVAILABLE, BESIDES IT IS NOT UNIFORM PROTOCOL FOR COMMUNICATION BETWEEN THE CONTROL SYSTEM AND THE REGULATORS, WHICH RESULTS IN INCORRECT ALARMS FROM REGULATORS

UWAGI:

REGULATOR NR	KOMENTARZ
5	DEMONTAŻ*, MONTAŻ REGULATORA 20 KVA *PROPONUJE SIĘ WYKORZYSTAĆ ZDEMONTOWANY REGULATOR DO OBW. NR 1
6	DEMONTAŻ*, MONTAŻ REGULATORA 20 KVA *PROPONUJE SIĘ WYKORZYSTAĆ ZDEMONTOWANY REGULATOR DO OBW. NR 2
3	MONTAŻ REGULATORA 5 KVA ISTN. REGULATOR, DZIAŁAJĄCY DLA KIER. 28 I 10, POZOSTANIE DLA KIER. 10
4	MONTAŻ REGULATORA 5 KVAR ISTN. REGULATOR, DZIAŁAJĄCY DLA KIER. 28 I 10, POZOSTANIE DLA KIER. 10
1	ISTNIEJĄCY REGULATOR 15 KVA* *PROPONUJE SIĘ DEMONTAŻ REGULATORA NR 1 (ADB/SIEMENS) I MONTAŻ REGULATORA NR 5 NA OBWÓD NR 1, Z POWODÓW BEZP., PATRZ NIŻEJ
2	EXISTING 15 KVA CCR *PROPONUJE SIĘ DEMONTAŻ REGULATORA NR 1 (ADB/SIEMENS) I MONTAŻ REGULATORA NR 5 NA OBWÓD NR 1, Z POWODÓW BEZP., PATRZ NIŻEJ
21	BEZ ZMIAN
22	BEZ ZMIAN

*ISTN. REGULATORY FIRMY ADB/SIEMENS WYCOFANE Z PRODUKCJI, NIE WSZYSTKIE CZ. ZAPASOWE DO REGULATORÓW SĄ DOSTĘPNE, POZA TYM- NIEJEDNOLITY PROTOKÓŁ KOMUNIKACJI POMIĘDZY SYSTEMEM STEROWANIA, A TYMI REGULATORAMI, CO SKUTKUJE BŁĘDNYMI ALARMAMI

US Army Corps of Engineers®

MARK	DESCRIPTION	DATE

DESIGNED BY: K. LOPEREZ
DRAWN BY: L. LAWICKA
CHECKED BY: K. LEPERA
SUBMITTED BY: D. DIEHL
SIZE: ANSI D
ISSUE DATE: MARCH 2017
SOLICITATION NO.:
PROJECT NO.: PAY215002A

U.S. ARMY CORPS OF ENGINEERS
KONRAD ADENAUER RING 39
WIESBADEN, D-65187 / GERMANY

AECOM INTERNATIONAL, INC.
SIEMENSSTRAGE 10
NEU-ISENBURG, 63263

ERI: IMPROVE SUPPORT INFRASTRUCTURE
ŁASK AB, POLAND

ELECTRICAL VAULT PLAN
PLAN POMIESZCZENIA REGULATORÓW CCR

SHEET ID
E-512

C:\PWWORKING\AECOM_EU\LLAWICKA\D0159839\15-D-0008-0003EEA507.DWG
5/13/2016 LUCYNA.LAWICKA SCALE: NTS

100%

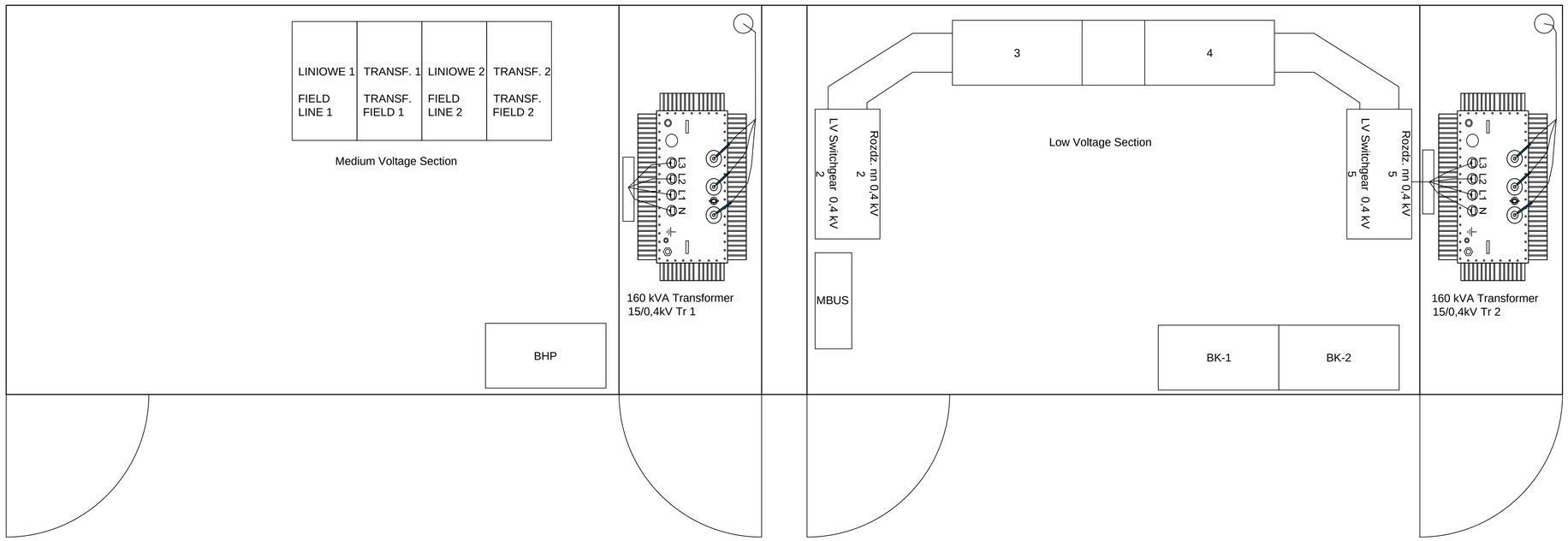

US Army Corps of Engineers®

MARK	DESCRIPTION	DATE

DESIGNED BY: K. LORENZ
DRAWN BY: L. LAWICKA
CHECKED BY: K. LEPERA
SUBMITTED BY: D. DIEHL
SIZE: ANSI D
ISSUE DATE: MARCH 2017
SOLICITATION NO.:
PROJECT NO.: PAY215002A

U.S. ARMY CORPS OF ENGINEERS
KONRAD ADENAUER RING 39
WIESBADEN, D-65187 / GERMANY

AECOM INTERNATIONAL, INC.
SIEMENSSTRAGE 10
NEU-ISENBURG, 63263

ERI: IMPROVE SUPPORT INFRASTRUCTURE
LASK AB, POLAND

EXISTING ELECTRICAL SUBSTATION ST8
ISTNIEJĄCA STACJA TRANSFORMATOROWA ST8

SHEET ID
E-513

C:\PWWORKING\AECOM_EU\LLAWICKA\ID0159839\15-D-0008-0003EEA507.DWG
5/13/2016 LUCYNA.LAWICKA SCALE: NTS

100%

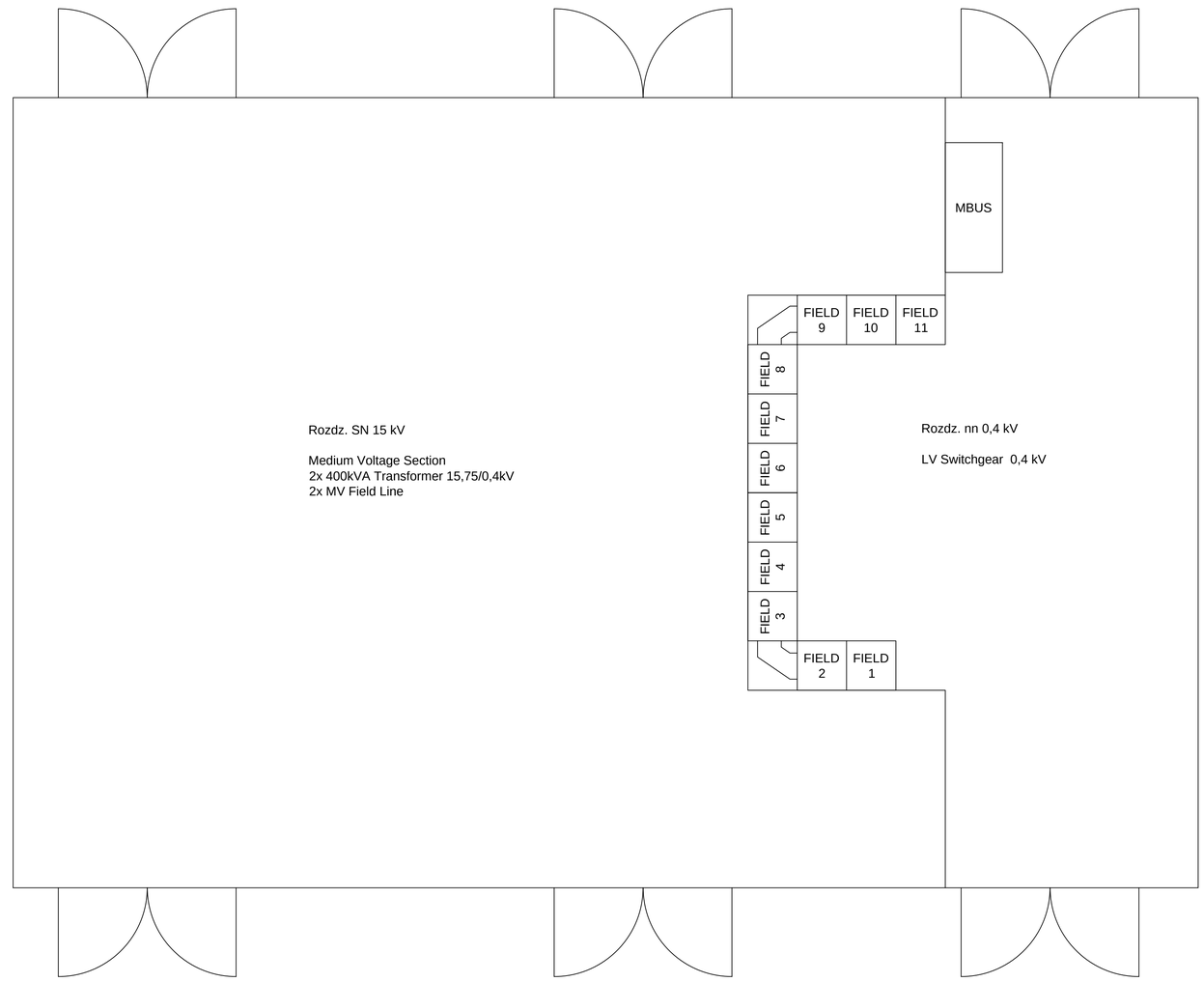

US Army Corps of Engineers®

MARK	DESCRIPTION	DATE

DESIGNED BY: K. LOPEZ
DRAWN BY: L. LAWICKA
CHECKED BY: K. LEPERA
SUBMITTED BY: D. DIEHL
SIZE: ANSI D
ISSUE DATE: MARCH 2017
SOLICITATION NO.:
PROJECT NO.: PAY215002A

U.S. ARMY CORPS OF ENGINEERS
KONRAD ADENAUER RING 29
WIESBADEN, D-65187 / GERMANY

AECOM INTERNATIONAL, INC.
SIEMENSSTRAGE 10
NEU-ISENBURG, 63263

ERI: IMPROVE SUPPORT INFRASTRUCTURE
ŁASK AB, POLAND

EXISTING ELECTRICAL SUBSTATION ST6
ISTNIEJĄCA STACJA TRANSFORMATOROWA ST6

SHEET ID
E-514

C:\PWWORKING\AECOM_EU\LLAWICKA\D0159839\15-D-0008-0003EEA507.DWG
5/13/2016 LUCYNA.LAWICKA SCALE: NTS

100%

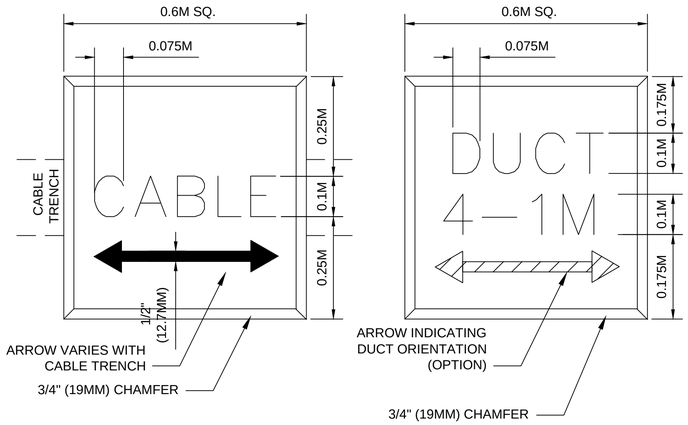

1 E-520 DETAIL - CABLE AND DUCT MARKERS
NOT TO SCALE

NOTES:

1. HAND LETTERING NOT ALLOWED ON MARKERS. LINE WIDTH AND DEPTH SHALL BE (1/2") (12MM) MINIMUM.
2. ARROW ON CABLE MARKER TO INDICATE DIRECTION OF CABLES (WHERE APPLICABLE).
3. DUCT MARKER SHALL INDICATE NUMBER AND SIZE OF DUCTS INSTALLED IN DUCT BANK. (4 - 1M SHOWN FOR EXAMPLE)
4. ALL MARKERS SHALL BE CONCRETE WITH A MINIMUM OF (0.1M) IN THICKNESS.

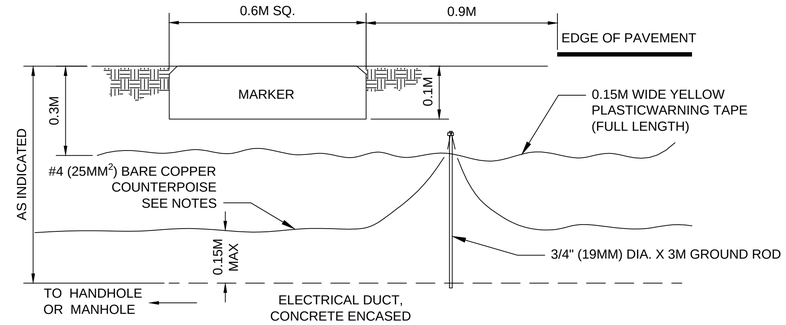

2 E-520 DETAIL - DUCT MARKER INSTALLATION AT PAVEMENT EDGE
NOT TO SCALE

NOTES:

1. TOP OF MARKER SHALL BE SET FLUSH WITH GRADE.
2. FOR INSTALLATION OF GROUND ROD AND COUNTERPOISE, REFER TO DETAIL 3, THIS SHEET.
3. COUNTERPOISE CABLES SHALL BE INSTALLED NOT MORE THAN 0.15M ABOVE THE UPPERMOST ELECTRICAL CABLE AND ALL CONDUIT AND DUCT SYSTEMS.

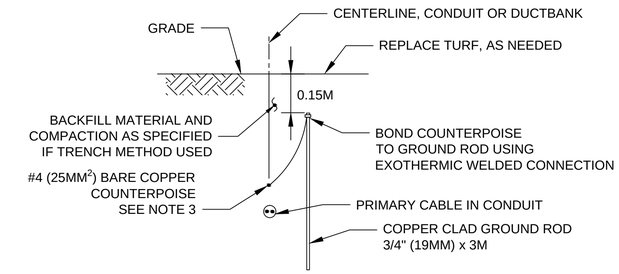

INSTALLATION ABOVE CONDUIT OR DUCT BANK

3 E-520 DETAIL - COUNTERPOISE AND GROUNDING ROD INSTALLATION
NOT TO SCALE

NOTES:

1. DO NOT CONNECT COUNTERPOISE TO LIGHT BASES OR MANHOLES/ HANDHOLES GROUNDING COMPONENTS.
2. PROVIDE GROUND RODS SPACED MAX. 300M.
3. COUNTERPOISE LOCATION FOR DIRECT BURIED DUCT/CONDUIT NOT RUNNING PARALLEL TO PAVEMENT.
4. COUNTERPOISE CABLES SHALL BE INSTALLED NOT MORE THAN 0.15M ABOVE THE UPPERMOST ELECTRICAL CABLE.

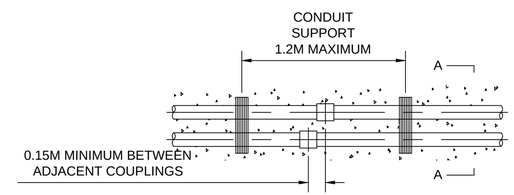

PLAN

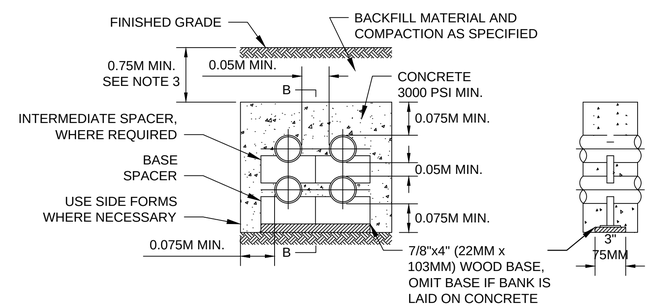

SECTION A-A SECTION B-B

5 E-520 DETAIL - TYP CONCRETE ENCASED DUCT BANK
NOT TO SCALE

NOTES:

1. FOR NON-METALLIC CONDUITS, TERMINATE WITH PLASTIC COUPLINGS SET FLUSH WITH END OF CONCRETE ENVELOPE AND INSTALL PLASTIC PLUGS. FOR METALLIC CONDUITS, TERMINATE WITH METALLIC COUPLINGS SET FLUSH WITH END OF CONCRETE ENVELOPE AND INSTALL WELL-GREASED PLUMBERS PLUGS OR THREADED PLASTIC PLUGS.
2. COUNTERPOISE AND WARNING TAPE NOT SHOWN FOR CLARITY.
3. MINIMUM DEPTH SHALL BE 0.75M OR 0.3M BELOW FROST LINE IN FROST SUSCEPTIBLE AREAS, WHICHEVER IS GREATER.
4. REFER TO ELECTRICAL LIGHTING PLANS FOR SIZE AND QUANTITY OF CONDUITS.
5. CONCRETE ON TOP, BOTTOM AND SIDES SHALL BE 0.075M MINIMUM FOR ALL DUCT BANKS.

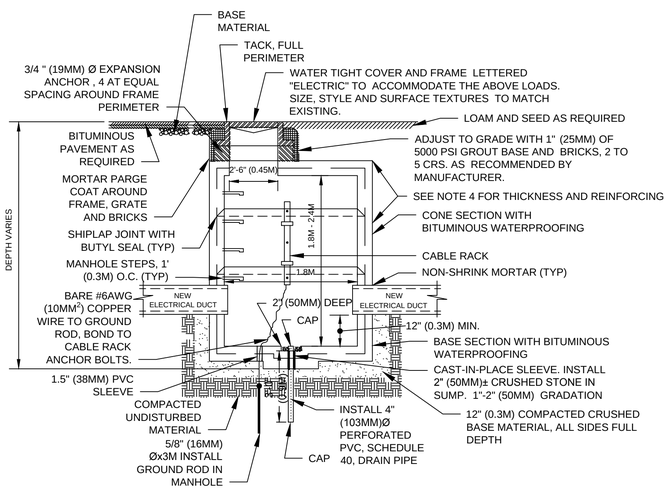

4 E-520 DETAIL - PRECAST ELECTRICAL MANHOLE
NOT TO SCALE

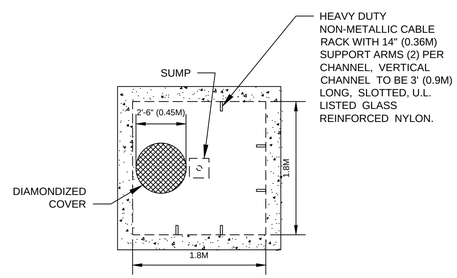

ELECTRICAL MANHOLE - TOP VIEW

NOTES:

1. FRAMES AND GRATES SHALL BE PAINTED WITH TWO (2) COATS OF RUST RESISTANT, AVIATION YELLOW PAINT.
2. MANHOLE COVERS SHALL BE NUMBERED AS DIRECTED WITH BLACK PAINT. LETTERING SHALL BE 6" (0.15M) HIGH, BLOCK LETTERING.
3. THE INSIDE CONE OF ALL MANHOLES SHALL ALSO BE NUMBERED.
4. CONCRETE TO BE 5000 PSI. @ 28 DAYS. STEEL TO BE ASTM A6150 GRADE 60, 60000 PSI.YIELD. MINIMUM WALL THICKNESS SHALL BE 5" (0.12M). MINIMUM TOP AND FLOOR THICKNESS SHALL BE 8" (0.2M).

US Army Corps of Engineers®

MARK	DESCRIPTION	DATE

DESIGNED BY: K. LOPEZ
DRAWN BY: L. LAWICKA
CHECKED BY: K. LEPERA
SUBMITTED BY: D. DIEHL
SIZE: ANSI D
ISSUE DATE: MARCH 2017
SOLICITATION NO.:
PROJECT NO.: PAY215002A

U.S. ARMY CORPS OF ENGINEERS
KONRAD ADENAUER RING 39
WIESBADEN, D-65187 / GERMANY

AECOM INTERNATIONAL, INC.
SIEMENSSTRAE 10
NEU-ISENBURG, 63263

ERI: IMPROVE SUPPORT INFRASTRUCTURE
ŁASK AB, POLAND

DUCT BANKS - DETAILS
KANALIZACJA KABLOWA - SZCZEGÓŁY

SHEET ID
E-520

C:\PWWORKING\AECOM_EU\LLAWICKA\D0159839\15-D-0008-0003EEA507.DWG
5/13/2016 LUCYNA.LAWICKA SCALE: NTS

100%

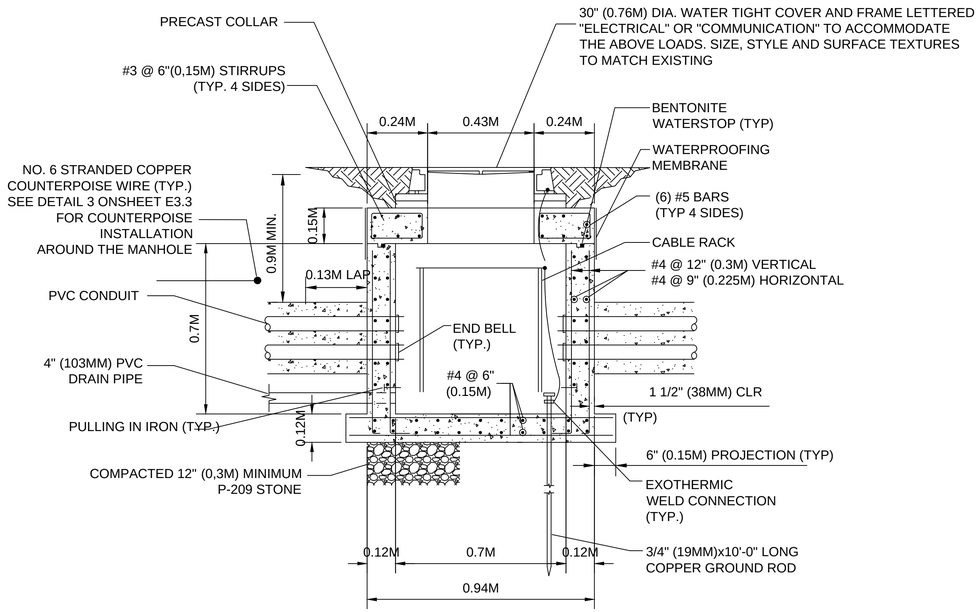

A / E-521 SECTION - A
NOT TO SCALE

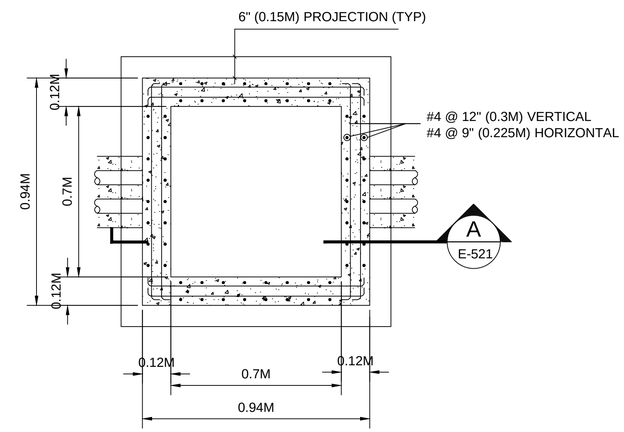

1 / E-521 DETAIL - ELECTRICAL HANDHOLE TYPE - 4x4x4 PLAN (TOP SLAB NOT SHOWN)
NOT TO SCALE

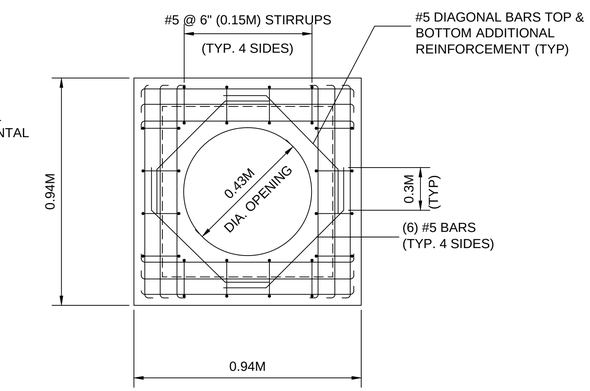

2 / E-521 TOP SLAB REINFORCEMENT PLAN
NOT TO SCALE

US Army Corps of Engineers®

MARK	DESCRIPTION	DATE

DESIGNED BY: K. LOPEZ
DRAWN BY: L. LAWICKA
CHECKED BY: K. LEPERA
SUBMITTED BY: D. DIEHL
SIZE: ANSI D
ISSUE DATE: MARCH 2017
SOLICITATION NO.:
PROJECT NO.: PAY215002A

U.S. ARMY CORPS OF ENGINEERS
KONRAD ADENAUER RING 39
WIESBADEN, D-65187 / GERMANY

AECOM INTERNATIONAL, INC.
SIEMENSSTRAGE 10
NEU-ISENBURG, 63263

ERI: IMPROVE SUPPORT INFRASTRUCTURE
ŁASK AB, POLAND

DUCT BANKS - DETAILS 2
KANALIZACJA KABLOWA - SZCZEGÓLY 2

SHEET ID
E-521

C:\PWWORKING\AECOM_EU\LLAWICKA\D0159839\15-D-0008-0003EEA507.DWG
5/13/2016 LUCYNA.LAWICKA SCALE: NTS
100%

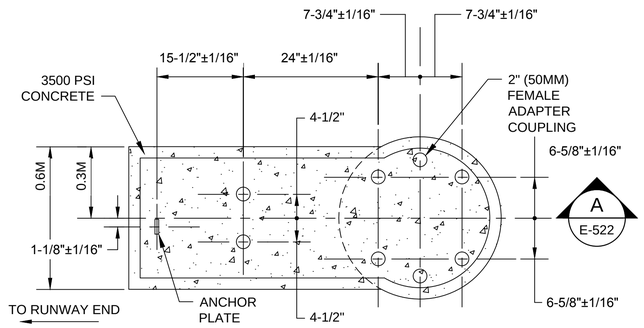

1 E-522 FOUNDATION FOR L.I.R. STRUCTURE MG-20 PLAN VIEW
NOT TO SCALE

NOTES:

1. ACTUAL DIMENSIONS MAY VARY. COORDINATE WITH MANUFACTURER PRIOR TO CONSTRUCTION AND CONSTRUCT PER MANUFACTURER'S REQUIREMENTS.

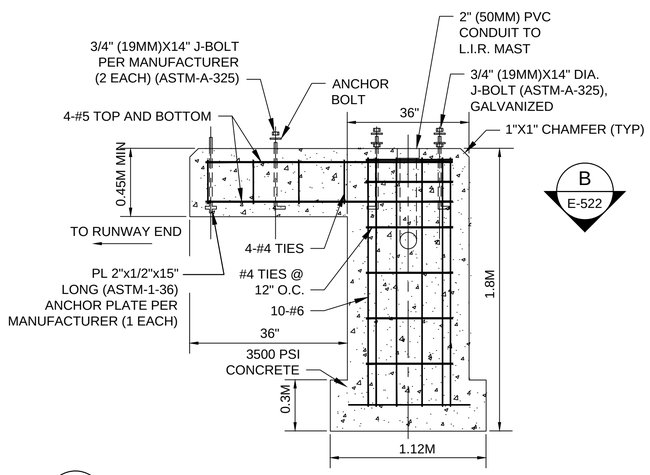

A E-522 FOUNDATION FOR L.I.R. STRUCTURE MG-20 SECTION - A
NOT TO SCALE

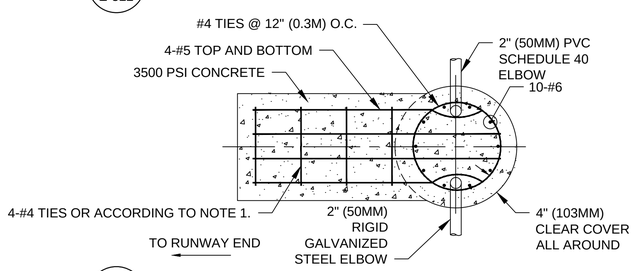

B E-522 FOUNDATION FOR L.I.R. STRUCTURE MG-20 SECTION - B
NOT TO SCALE

NOTES:

1. REINFORCING SHALL BE PER THE MANUFACTURER'S WRITTEN REQUIREMENTS.

US Army Corps of Engineers®

MARK	DESCRIPTION	DATE

ISSUE DATE: MARCH 2017
SOLICITATION NO.:
PROJECT NO.: PAY215002A

DESIGNED BY: K. LOPEZ
DRAWN BY: L. ŁAWICKA
CHECKED BY: K. LEPERA
SUBMITTED BY: D. DIEHL
SIZE: ANSI D

U.S. ARMY CORPS OF ENGINEERS
KONRAD ADENAUER RING 39
WIESBADEN, D-65187 / GERMANY

AECOM INTERNATIONAL, INC.
SIEMENSSTRAAE 10
NEU-ISENBURG, 63263

ERI: IMPROVE SUPPORT INFRASTRUCTURE
ŁASK AB, POLAND

FOUNDATION FOR L.I.R. STRUCTURES - DETAILS
FUNDAMENTY DLA MASZTÓW L.I.R. - SZCZEGÓŁY

SHEET ID
E-522

C:\PWWORKING\AECOM_EU\LLAWICKA\D0159839\15-D-0008-0003EEA507.DWG
5/13/2016 LUCYNA.LAWICKA SCALE: NTS

100%

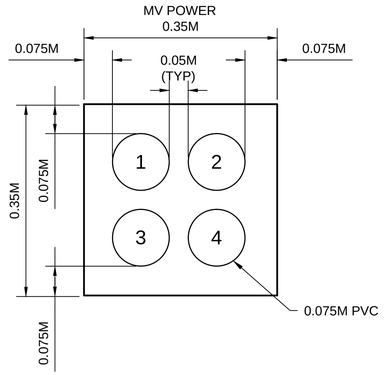

SECTION A-A 4 WAY - 0.075M MV POWER
SECTION F-F 4 WAY - 0.075M MV POWER

NOT TO SCALE

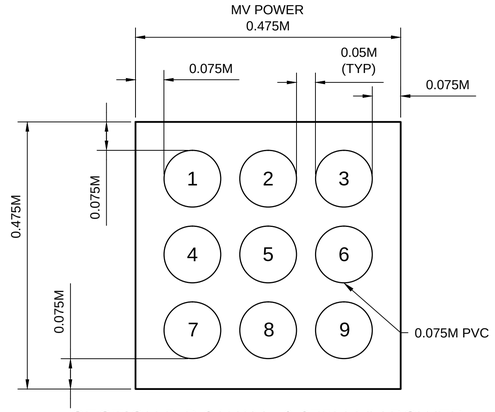

SECTION B-B 9 WAY - 0.075M MV POWER
SECTION D-D 9 WAY - 0.075M MV POWER

NOT TO SCALE

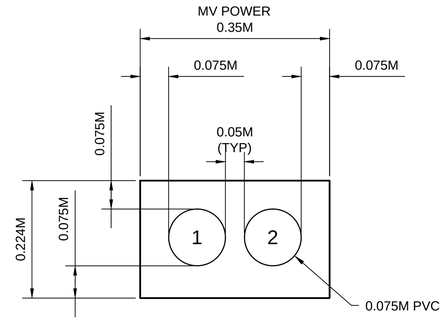

SECTION C-C 2 WAY - 0.075M MV POWER

NOT TO SCALE

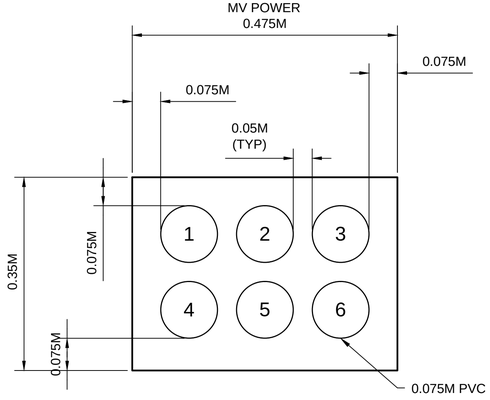

SECTION E-E 6 WAY 0.075M MV POWER

NOT TO SCALE

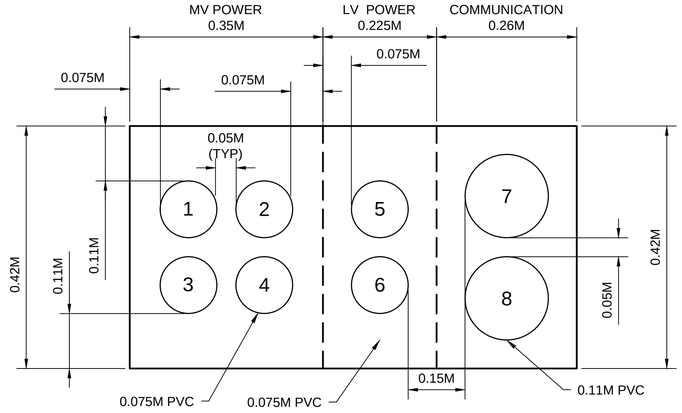

SECTION G-G 8 WAY - (2 WAY) 0.11M COMM.
(2 WAY) 0.075M LV POWER
(4 WAY) 0.075M MV POWER

NOT TO SCALE

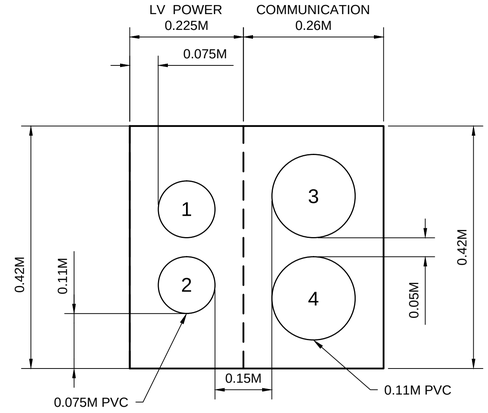

SECTION H-H 4 WAY - (2 WAY) 0.11M COMM.
(2 WAY) 0.075M LV POWER

NOT TO SCALE

US Army Corps of Engineers®

MARK	DESCRIPTION	DATE

DESIGNED BY: K. LOPEZ
DRAWN BY: L. LAWICKA
CHECKED BY: K. LEPERA
SUBMITTED BY: D. DIEHL
SIZE: ANSI D
ISSUE DATE: MARCH 2017
SOLICITATION NO.:
PROJECT NO.: PAY215002A

U.S. ARMY CORPS OF ENGINEERS
KONRAD ADENAUER RING 29
WIESBADEN, D-65187 / GERMANY

AECOM INTERNATIONAL, INC.
SIEMENSSTRAGE 10
NEU-ISENBURG, 63263

ERI: IMPROVE SUPPORT INFRASTRUCTURE
ŁASK AB, POLAND

DUCTBANK LONGITUDINAL SECTIONS 1
KANALIZACJA KABLOWA - PRZEKROJE WZDŁUŻNE 1

SHEET ID
E-530

C:\PWWORKING\AECOM_EU\LLAWICKA\D0159839\15-D-0008-0003EEA507.DWG
5/13/2016 LUCYNA.LAWICKA SCALE: NTS

100%

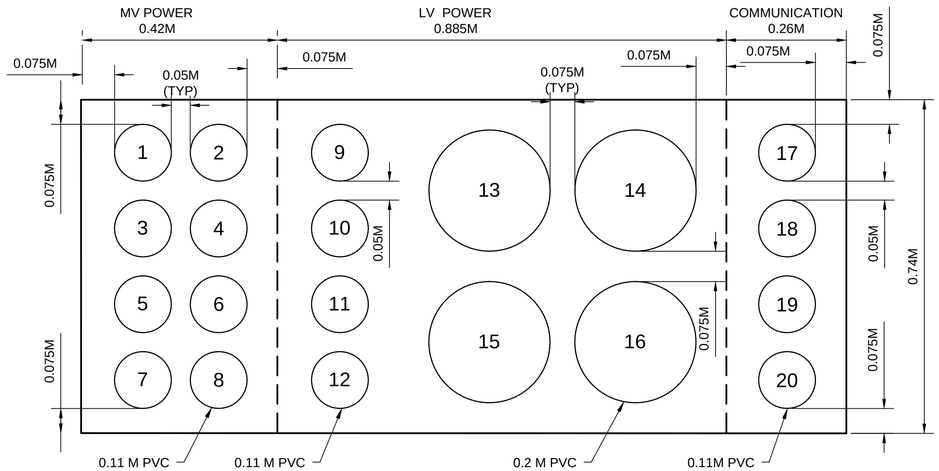

SECTION R1-R1 20 WAY - (4 WAY) 0.11M COMM.
(4 WAY) 0.20M LV POWER
(4 WAY) 0.11M LV POWER
(8 WAY) 0.11M MV POWER

NOT TO SCALE

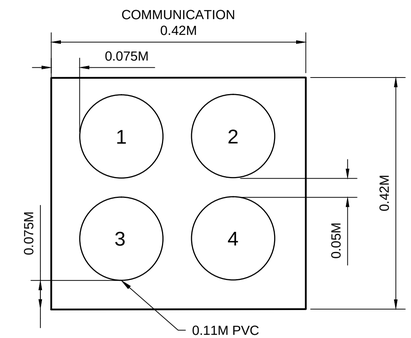

SECTION R2-R2 4 WAY - (4 WAY) 0.11M COMM.

NOT TO SCALE

US Army Corps of Engineers®

MARK	DESCRIPTION	DATE

DESIGNED BY: K. LOPEZ
DRAWN BY: L. LAWICKA
CHECKED BY: K. LEPERA
SUBMITTED BY: D. DIEHL
SIZE: ANSI D
ISSUE DATE: MARCH 2017
SOLICITATION NO.:
PROJECT NO.: PAY215002A

U.S. ARMY CORPS OF ENGINEERS
KONRAD ADENAUER RING 39
WIESBADEN, D-65187 / GERMANY

AECOM INTERNATIONAL, INC.
SIEMENSSTRAGE 10
NEU-ISENBURG, 63263

ERI: IMPROVE SUPPORT INFRASTRUCTURE
ŁASK AB, POLAND

DUCTBANK LONGITUDINAL SECTIONS 2
KANALIZACJA KABLOWA - PRZEKROJE WZDŁUŻNE 2

SHEET ID
E-531

C:\PWWORKING\AECOM_EU\LLAWICKA\D0159839\15-D-0008-0003EEA507.DWG
5/13/2016 LUCYNA.LAWICKA SCALE: NTS

100%

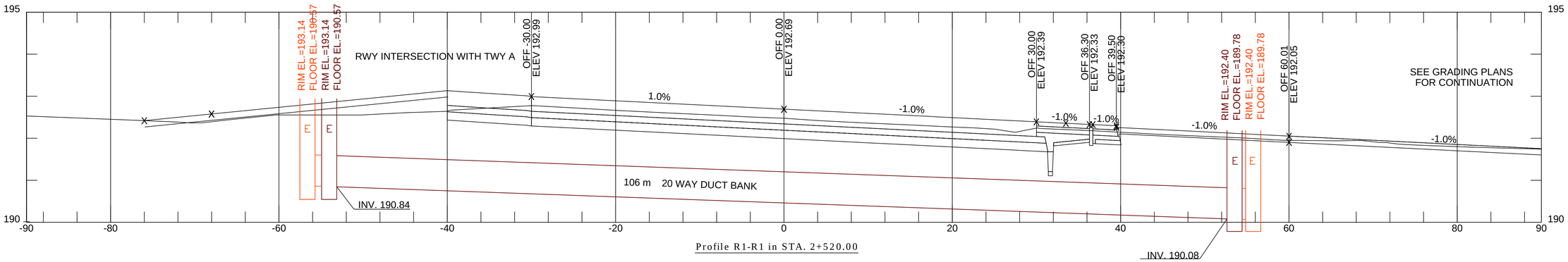

Profile R1-R1 in STA. 2+520.00

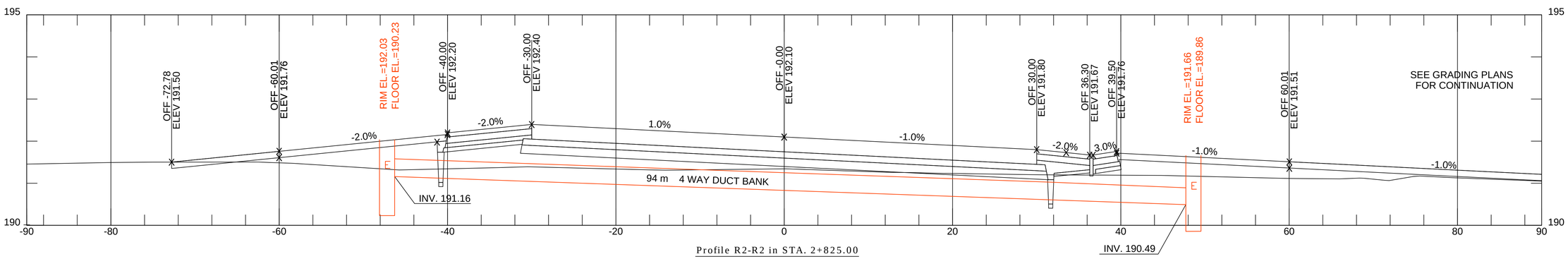

Profile R2-R2 in STA. 2+825.00

NOTES:

PROFILE R1-R1
ALL EARTH WORK CONNECTED WITH ENCASED DUCTBANK DO AFTER COMPACTION
(SOIL COMPACTING OF SUPERCOMPACTOR - METHOD C - ACCORDING TO GEOTECHNICAL DOCUMENTATION)

PROFILE R2-R2
ALL EARTH WORK CONNECTED WITH ENCASED DUCTBANK DO AFTER DYNAMIC COMPACTION
(METHOD B - ACCORDING TO GEOTECHNICAL DOCUMENTATION)

US Army Corps of Engineers®

MARK	DESCRIPTION	DATE

ISSUE DATE: MARCH 2017
SOLICITATION NO.:
PROJECT NO.: PAY215002A

DESIGNED BY: K. LOPEZ
DRAWN BY: L. ŁAWICKA
CHECKED BY: K. LEPERA
SUBMITTED BY: D. DIEHL
SIZE: ANSI D

U.S. ARMY CORPS OF ENGINEERS
KONRAD ADENAUER RING 39
WIESBADEN, D-65187 / GERMANY

AECOM INTERNATIONAL, INC.
SIEMENSSTRAGE 10
NEU-ISENBURG, 63263

ERI: IMPROVE SUPPORT INFRASTRUCTURE
LASK AB, POLAND

DUCTBANK CROSS SECTIONS 1
KANALIZACJA KABLOWA - PRZEKROJE POPRZECZNE 1

SHEET ID
E-532

C:\PWWORKING\AECOM_EU\LLAWICKA\ID0159839\15-D-0008-0003EEA507.DWG
5/13/2016 LUCYNA.LAWICKA SCALE: 1:50/250

100%

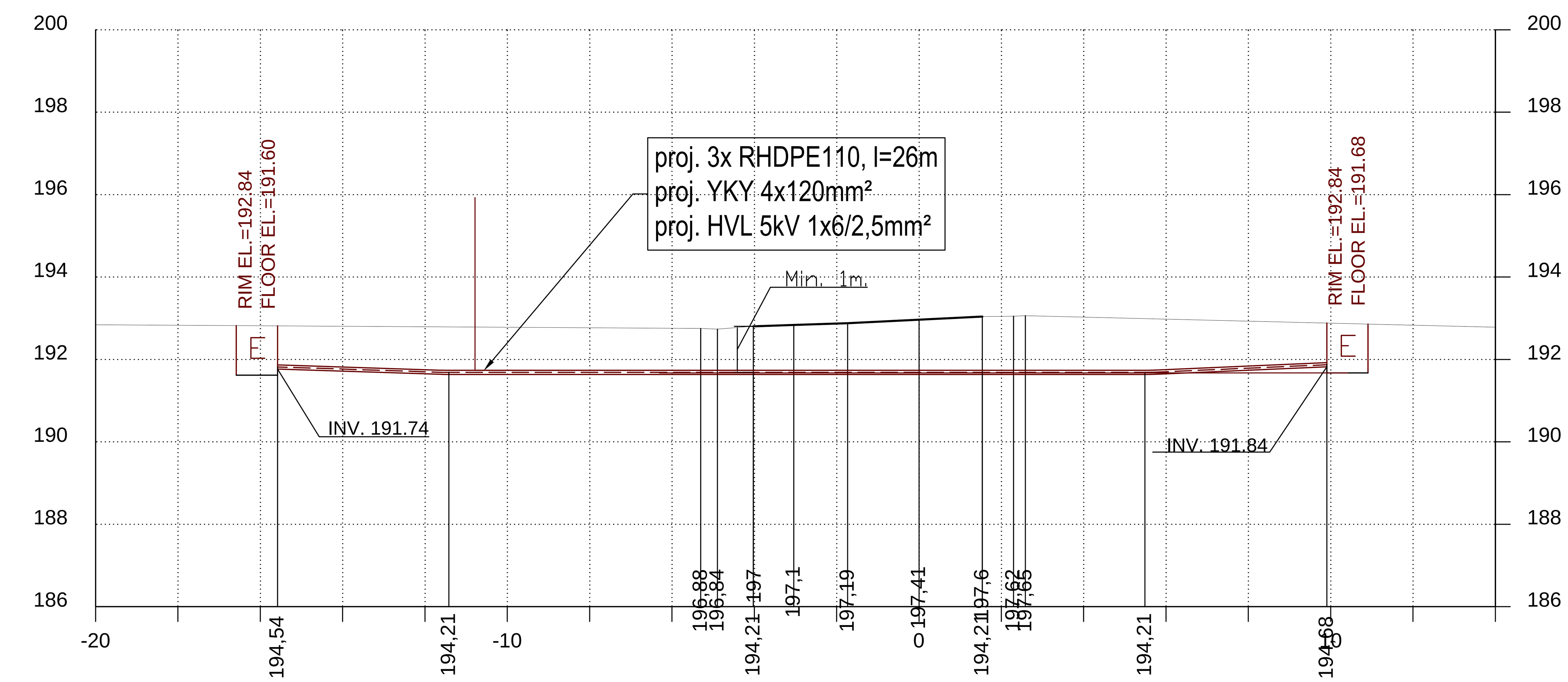

Distance:	-13,25	-12,23	-10,05	-7,6	-4,33	0	3,84	5,74	6,46
Ordinate of Road:									

Distance:	-38,95	-28,54	-10,05	3,84	9,88	24,77
Ordinate of Cable:						

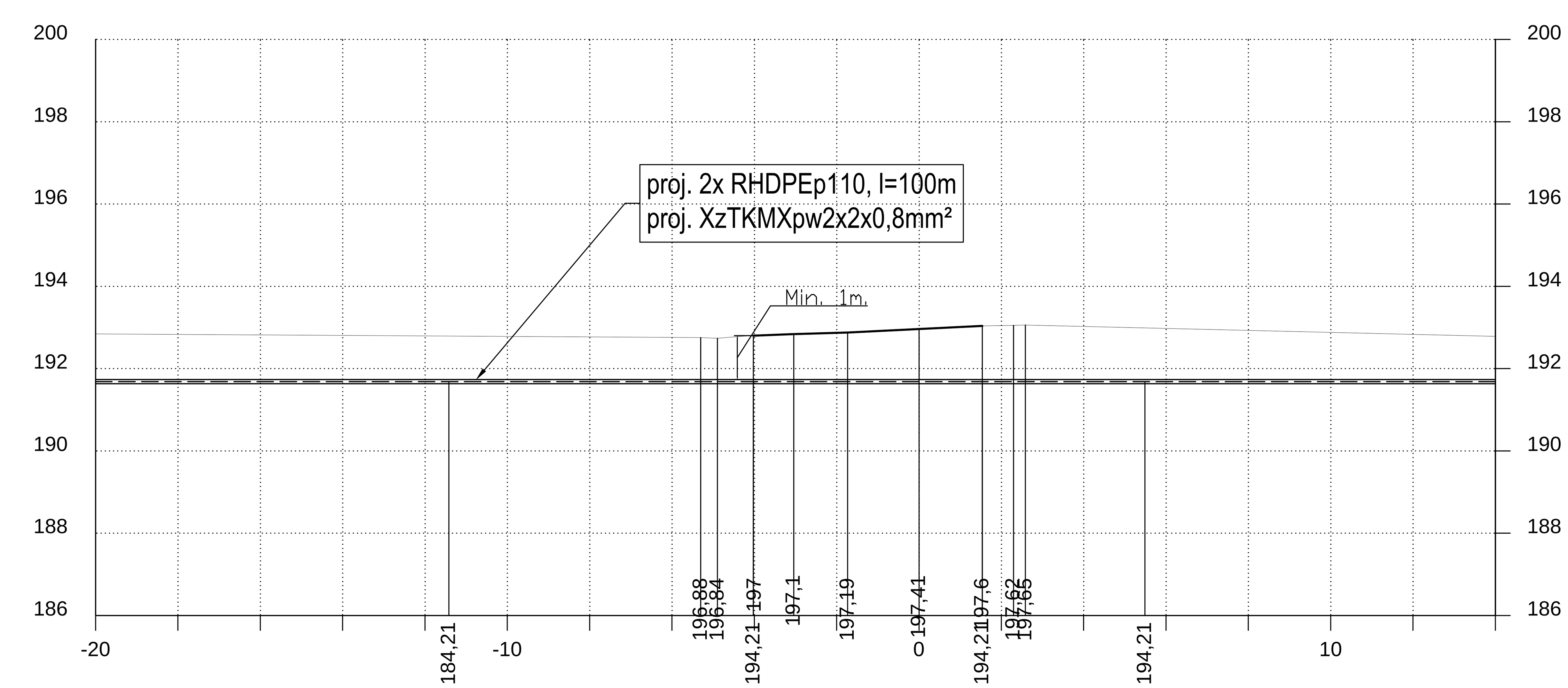

Distance:	-13,25	-12,23	-10,05	-7,6	-4,33	0	3,84	5,74	6,46
Ordinate of Road:									

Distance:	-28,54	-10,05	3,84	9,88
Ordinate of Cable:				

US Army Corps of Engineers®

MARK | DESCRIPTION | DATE

ISSUE DATE: MARCH 2017
SOLICITATION NO.:
PROJECT NO.: PAYZ15002A

DESIGNED BY: K. LORENZ
DRAWN BY: L. ŁAWICKA
CHECKED BY: K. LEPERA
SUBMITTED BY: D. DIEHL
SIZE: ANSI D

U.S. ARMY CORPS OF ENGINEERS
KONRAD ADENAUER RING 39
WIESBADEN, D-65187 / GERMANY

AECOM INTERNATIONAL, INC.
SIEMENSSTRAßE 10
NEU-ISENBURG, 63263

ERI: IMPROVE SUPPORT INFRASTRUCTURE
ŁASK AB, POLAND

DUCTBANK SECTIONS 2
KANALIZACJA KABLOWA - PRZEKROJE 2

SHEET ID
E-533

C:\PWWORKING\AECOM_EU\LLAWICKA\D0159839\15-D-0008-0003EEA507.DWG
5/13/2016 LUCYNA.LAWICKA SCALE: 1:100

100%

DUCTBANKS SCHEDULE

LOCATION	SECTION	DUCT BANK SIZE	DUCT NUMBER	DUCT SIZE	CABLE	CIRCUIT
EH-1 TO EH-2	A-A	4 WAY	1	0.075M		SPARE
			2	0.075M		SPARE
			3	0.075M	A	8
			4	0.075M	A	9
EH-2 TO E-1	A-A	4 WAY	1	0.075M		SPARE
			2	0.075M		SPARE
			3	0.075M	A	8
			4	0.075M	A	9
E-1 TO EH-3A	B-B	9 WAY	1	0.075M		SPARE
			2	0.075M	A	8
			3	0.075M	A	9
			4	0.075M	A	1
			5	0.075M	A	2
			6	0.075M	A	21
			7	0.075M	A	3
			8	0.075M	A	4
			9	0.075M	A	22
EH-3A TO NORTH PAPI	C-C	2 WAY	1	0.075M	A	8
			2	0.075M	A	9
EH-3A TO EH-3B	D-D	9 WAY	1	0.075M		SPARE
			2	0.075M		SPARE
			3	0.075M		SPARE
			4	0.075M	A	1
			5	0.075M	A	2
			6	0.075M	A	21
			7	0.075M	A	3
			8	0.075M	A	4
			9	0.075M	A	22
EH-3B TO EH-3C	D-D	9 WAY	1	0.075M		SPARE
			2	0.075M		SPARE
			3	0.075M		SPARE
			4	0.075M	A	1
			5	0.075M	A	2
			6	0.075M	A	21
			7	0.075M	A	3
			8	0.075M	A	4
			9	0.075M	A	22
EH-3C TO EH-5	D-D	9 WAY	1	0.075M		SPARE
			2	0.075M		SPARE
			3	0.075M		SPARE
			4	0.075M	A	1
			5	0.075M	A	2
			6	0.075M	A	21
			7	0.075M	A	3
			8	0.075M	A	4
			9	0.075M	A	22
EH-5 TO EH-6	D-D	9 WAY	1	0.075M		SPARE
			2	0.075M		SPARE
			3	0.075M		SPARE
			4	0.075M	A	1
			5	0.075M	A	2
			6	0.075M	A	21
			7	0.075M	A	3
			8	0.075M	A	4
			9	0.075M	A	22

LOCATION	SECTION	DUCT BANK SIZE	DUCT NUMBER	DUCT SIZE	CABLE	CIRCUIT
EH-6 TO EH-7	D-D	9 WAY	1	0.075M		SPARE
			2	0.075M		SPARE
			3	0.075M		SPARE
			4	0.075M	A	1
			5	0.075M	A	2
			6	0.075M	A	21
			7	0.075M	A	3
			8	0.075M	A	4
			9	0.075M	A	22
EH-7 TO EH-10A	D-D	9 WAY	1	0.075M		SPARE
			2	0.075M		SPARE
			3	0.075M		SPARE
			4	0.075M	A	1
			5	0.075M	A	2
			6	0.075M	A	21
			7	0.075M	A	3
			8	0.075M	A	4
			9	0.075M	A	22
EH-9 TO EH-8	E-E	6 WAY	1	0.075M	A	21
			2	0.075M		SPARE
			3	0.075M		SPARE
			4	0.075M	A	22
			5	0.075M	A	1
			6	0.075M	A	2
EH-8 TO EH-10A	E-E	6 WAY	1	0.075M	A	21
			2	0.075M		SPARE
			3	0.075M		SPARE
			4	0.075M	A	22
			5	0.075M	A	1
			6	0.075M	A	2
EH-10A TO EH-10B	F-F	4 WAY	1	0.075M		SPARE
			2	0.075M		SPARE
			3	0.075M	A	1
			4	0.075M	A	2
EH-10B TO EH-11	F-F	4 WAY	1	0.075M		SPARE
			2	0.075M		SPARE
			3	0.075M	A	1
			4	0.075M	A	2
EH-11 TO EH-12	F-F	4 WAY	1	0.075M		SPARE
			2	0.075M		SPARE
			3	0.075M	A	1
			4	0.075M	A	2
EH-12 TO EH-13	F-F	4 WAY	1	0.075M		SPARE
			2	0.075M		SPARE
			3	0.075M	A	1
			4	0.075M	A	2
EH-13 TO EH-14	F-F	4 WAY	1	0.075M		SPARE
			2	0.075M		SPARE
			3	0.075M	A	1
			4	0.075M	A	2
EH-14 TO J-9	F-F	4 WAY	1	0.075M		SPARE
			2	0.075M		SPARE
			3	0.075M	A	1
			4	0.075M	A	2
J-9 TO J-10	F-F	4 WAY	1	0.075M		SPARE
			2	0.075M		SPARE
			3	0.075M	A	1
			4	0.075M	A	2

CIRCUIT DESCRIPTION	CIRCUIT NUMBER	CABLE
APPROACH	1	A
APPROACH	2	A
TAXIWAY EDGE	21	A
TAXIWAY EDGE	22	A
THRESHOLD	3	A
THRESHOLD	4	A
RUNWAY EDGE & END	5	A
RUNWAY EDGE & END	6	A
PAPI	8	A
PAPI	9	A
NAVAID	PCKT 1	C
FAR FIELD MONITOR	PCKT 2	E
CEILOMETER	PCKT 3	G
NAVAID	PCKT 4	C
GLIDE SLOPE	PCKT 5	D
MIDDLE MARKER	PCKT 6	G
AWOS	PCKT 7	C
AWOS	PCKT 8	G
BAK SYSTEM	PCKT 9	B
ZK1	PCKT 10	F
ZK2	PCKT 11	H
SK-B4 - BAK SYSTEM	TCKT 1	J
SK-B4 - AWOS	TCKT 2	K
SK-B4 - T-25	TCKT 3	M
T-25 - FFM	TCKT 4	K
T-25 - CEILOMETER	TCKT 5	K
T-25 - T-27	TCKT 6	L
T-27 - GLIDE SLOPE	TCKT 7	K
T-27 - MM	TCKT 8	K
	SPARE	

CABLE	CABLE TYPE
A	HVL 1x6+2.5mm2
A-1 (600 V)	HVL 1x2.5mm2
A-2 (5 KV)	HVL 1x6 mm2
B	4xYKY 1x300mm2
C	YKY 4x120mm2
D	YKY 4x50mm2
E	YKY 3x35mm2
F	YAKY 4x25mm2
G	YKY 4x10mm2
H	YAKY 3x10mm2
J	XzTKMXpw2x2x0,8
K	XzTKMXpw4x2x0,8
L	XzTKMXpw8x2x0,8
M	XzTKMXpw20x2x0,8

NOTES:

1. "A" CABLE IS AN EQUIVALENT FOR FAA-L-824 CABLE

US Army Corps of Engineers®

MARK	DESCRIPTION	DATE

ISSUE DATE: MARCH 2017
SOLICITATION NO.:
PROJECT NO.: PAY215002A

DESIGNED BY: K. LORENZ
DRAWN BY: L. LAWICKA
CHECKED BY: K. LEPERA
SUBMITTED BY: D. DIEHL
SIZE: ANSI D

U.S. ARMY CORPS OF ENGINEERS
KONRAD ADENAUER RING 39
WIESBADEN, D-65187 / GERMANY

AECOM INTERNATIONAL, INC.
SIEMENSSTRAGE 10
NEU-ISENBURG, 63263

ERI: IMPROVE SUPPORT INFRASTRUCTURE
ŁASK AB, POLAND

DUCTBANK DETAILS 1
KANALIZACJA KABLOWA - SZCZEGÓLY 1

SHEET ID
E-535

C:\PWWORKING\AECOM_EU\LLAWICKA\D0159839\15-D-0008-0003EEA507.DWG
5/13/2016 LUCYNA.LAWICKA SCALE: NTS

100%

DUCTBANKS SCHEDULE

LOCATION	SECTION	DUCT BANK SIZE	DUCT NUMBER	DUCT SIZE	CABLE	CIRCUIT
J-10 TO J-11	F-F	4 WAY	1	0.075M		SPARE
			2	0.075M		SPARE
			3	0.075M	A	1
			4	0.075M	A	2
J-11 TO J-12	F-F	4 WAY	1	0.075M		SPARE
			2	0.075M		SPARE
			3	0.075M	A	1
			4	0.075M	A	2
J-12 TO EH-15	F-F	4 WAY	1	0.075M		SPARE
			2	0.075M		SPARE
			3	0.075M	A	1
			4	0.075M	A	2
EH-15 TO J-18	F-F	4 WAY	1	0.075M		SPARE
			2	0.075M		SPARE
			3	0.075M	A	1
			4	0.075M	A	2
J-18 TO J-19	F-F	4 WAY	1	0.075M		SPARE
			2	0.075M		SPARE
			3	0.075M	A	1
			4	0.075M	A	2
J-19 TO J-20	F-F	4 WAY	1	0.075M		SPARE
			2	0.075M		SPARE
			3	0.075M	A	1
			4	0.075M	A	2
J-20 TO J-21	F-F	4 WAY	1	0.075M		SPARE
			2	0.075M		SPARE
			3	0.075M	A	1
			4	0.075M	A	2
J-21 TO EH-16	F-F	4 WAY	1	0.075M		SPARE
			2	0.075M		SPARE
			3	0.075M	A	1
			4	0.075M	A	2
EH-16 TO J-27	F-F	4 WAY	1	0.075M		SPARE
			2	0.075M		SPARE
			3	0.075M	A	1
			4	0.075M	A	2
J-27 TO J-28	F-F	4 WAY	1	0.075M		SPARE
			2	0.075M		SPARE
			3	0.075M	A	1
			4	0.075M	A	2
J-28 TO EH-17MV	F-F	4 WAY	1	0.075M		SPARE
			2	0.075M		SPARE
			3	0.075M	A	1
			4	0.075M	A	2
EH-17MV TO EH-18MV	G-G	8 WAY	1	0.075M		SPARE
			2	0.075M		SPARE
			3	0.075M	A	1
			4	0.075M	A	2
EH-17LV TO EH-21LV			5	0.075M		SPARE
			6	0.075M	C	PCKT 1
T-22 TO T-23			7	0.11M		SPARE
			8	0.11M	M	TCKT 3

LOCATION	SECTION	DUCT BANK SIZE	DUCT NUMBER	DUCT SIZE	CABLE	CIRCUIT
EH-18MV TO EH-19MV	G-G	8 WAY	1	0.075M		SPARE
			2	0.075M		SPARE
			3	0.075M	A	1
			4	0.075M	A	2
(EH-17LV TO EH-21LV)			5	0.075M		SPARE
			6	0.075M	C	PCKT 1
(T-22 TO T-23)			7	0.11M		SPARE
			8	0.11M	M	TCKT 3
EH-19MV TO EH-20MV	G-G	8 WAY	1	0.075M		SPARE
			2	0.075M		SPARE
			3	0.075M	A	1
			4	0.075M	A	2
(EH-17LV TO EH-21LV)			5	0.075M		SPARE
			6	0.075M	C	PCKT 1
(T-22 TO T-23)			7	0.11M		SPARE
			8	0.11M	M	TCKT 3
EH-20MV TO EH-21MV	G-G	8 WAY	1	0.075M		SPARE
			2	0.075M		SPARE
			3	0.075M	A	1
			4	0.075M	A	2
(EH-17LV TO EH-21LV)			5	0.075M		SPARE
			6	0.075M	C	PCKT 1
T-23 TO T-24			7	0.11M		SPARE
			8	0.11M	M	TCKT 3
EH-21MV TO EH-22MV	G-G	8 WAY	1	0.075M		SPARE
			2	0.075M		SPARE
			3	0.075M	A	1
			4	0.075M	A	2
EH-21LV TO EH-25LV			5	0.075M		SPARE
			6	0.075M	C	PCKT 1
(T-23 TO T-24)			7	0.11M		SPARE
			8	0.11M	M	TCKT 3
EH-21MV TO EH-22MV	G-G	8 WAY	1	0.075M		SPARE
			2	0.075M		SPARE
			3	0.075M	A	1
			4	0.075M	A	2
(EH-21LV TO EH-25LV)			5	0.075M		SPARE
			6	0.075M	C	PCKT 1
(T-23 TO T-24)			7	0.11M		SPARE
			8	0.11M	M	TCKT 3
EH-22MV TO EH-23MV	G-G	8 WAY	1	0.075M		SPARE
			2	0.075M		SPARE
			3	0.075M	A	1
			4	0.075M	A	2
(EH-21LV TO EH-25LV)			5	0.075M		SPARE
			6	0.075M	C	PCKT 1
(T-23 TO T-24)			7	0.11M		SPARE
			8	0.11M	M	TCKT 3
EH-23MV TO EH-24MV	G-G	8 WAY	1	0.075M		SPARE
			2	0.075M		SPARE
			3	0.075M	A	1
			4	0.075M	A	2
(EH-21LV TO EH-25LV)			5	0.075M		SPARE
			6	0.075M	C	PCKT 1
(T-23 TO T-24)			7	0.11M		SPARE
			8	0.11M	M	TCKT 3

CIRCUIT DESCRIPTION	CIRCUIT NUMBER	CABLE
APPROACH	1	A
APPROACH	2	A
TAXIWAY EDGE	21	A
TAXIWAY EDGE	22	A
THRESHOLD	3	A
THRESHOLD	4	A
RUNWAY EDGE & END	5	A
RUNWAY EDGE & END	6	A
PAPI	8	A
PAPI	9	A
NAVAID	PCKT 1	C
FAR FIELD MONITOR	PCKT 2	E
CEILOMETER	PCKT 3	G
NAVAID	PCKT 4	C
GLIDE SLOPE	PCKT 5	D
MIDDLE MARKER	PCKT 6	G
AWOS	PCKT 7	C
AWOS	PCKT 8	G
BAK SYSTEM	PCKT 9	B
ZK1	PCKT 10	F
ZK2	PCKT 11	H
SK-B4 - BAK SYSTEM	TCKT 1	J
SK-B4 - AWOS	TCKT 2	K
SK-B4 - T-25	TCKT 3	M
T-25 - FFM	TCKT 4	K
T-25 - CEILOMETER	TCKT 5	K
T-25 - T-27	TCKT 6	L
T-27 - GLIDE SLOPE	TCKT 7	K
T-27 - MM	TCKT 8	K
	SPARE	

CABLE	CABLE TYPE
A	HVL 1x6+2.5mm2
A-1 (600 V)	HVL 1x2.5mm2
A-2 (5 KV)	HVL 1x6 mm2
B	4xYKY 1x300mm2
C	YKY 4x120mm2
D	YKY 4x50mm2
E	YKY 3x35mm2
F	YAKY 4x25mm2
G	YKY 4x10mm2
H	YAKY 3x10mm2
J	XzTKMXpw2x2x0,8
K	XzTKMXpw4x2x0,8
L	XzTKMXpw8x2x0,8
M	XzTKMXpw20x2x0,8

NOTES:

1. "A" CABLE IS AN EQUIVALENT FOR FAA-L-824 CABLE
2. E.G. EH-21MV & EH-21LV ARE SEPARATE HANDHOLES FOR MEDIUM AND LOW VOLTAGE. KEEP DUCTS SEPARATED WHEN VOLTAGE LEVEL SPECIFIED. FOR DUCT BANKS SECTIONS SEE SHEET E-531.

US Army Corps of Engineers®

MARK	DESCRIPTION	DATE

ISSUE DATE: MARCH 2017
SOLICITATION NO.:
PROJECT NO.: PAY215002A

DESIGNED BY: K. LORENZ
DRAWN BY: L. LAWICKA
CHECKED BY: K. LEPERA
SUBMITTED BY: D. DIEHL
SIZE: ANSI D

U.S. ARMY CORPS OF ENGINEERS
KONRAD ADENAUER RING 39
WIESBADEN, D-65187 / GERMANY

AECOM INTERNATIONAL, INC.
SIEMENSSTRAGE 10
NEU-ISENBURG, 63263

ERI: IMPROVE SUPPORT INFRASTRUCTURE
ŁASK AB, POLAND

DUCTBANK DETAILS 2
KANALIZACJA KABLOWA - SZCZEGÓŁY 2

SHEET ID

E-536

C:\PWWORKING\AECOM_EU\LLAWICKA\D0159839\15-D-0008-0003EEA507.DWG
5/13/2016 LUCYNA.LAWICKA SCALE: NTS

100%

DUCTBANKS SCHEDULE

LOCATION	SECTION	DUCT BANK SIZE	DUCT NUMBER	DUCT SIZE	CABLE	CIRCUIT
EH-24MV TO EH-25MV	G-G	8 WAY	1	0.075M		SPARE
			2	0.075M		SPARE
			3	0.075M	A	1
			4	0.075M	A	2
(EH-21LV TO EH-25LV)			5	0.075M		SPARE
			6	0.075M	C	PCKT 1
T-24 TO T-25			7	0.11M		SPARE
			8	0.11M	M	TCKT 3
EH-25MV TO EH-26MV	G-G	8 WAY	1	0.075M		SPARE
			2	0.075M		SPARE
			3	0.075M	A	1
			4	0.075M	A	2
EH-25LV TO EH-29LV			5	0.075M		SPARE
			6	0.075M	C	PCKT 1
(T-24 TO T-25)			7	0.11M		SPARE
			8	0.11M	M	TCKT 3
EH-26MV TO EH-27MV	G-G	8 WAY	1	0.075M		SPARE
			2	0.075M		SPARE
			3	0.075M	A	1
			4	0.075M	A	2
(EH-25LV TO EH-29LV)			5	0.075M		SPARE
			6	0.075M	C	PCKT 1
(T-24 TO T-25)			7	0.11M		SPARE
			8	0.11M	M	TCKT 3
EH-27MV TO EH-28MV	G-G	8 WAY	1	0.075M		SPARE
			2	0.075M		SPARE
			3	0.075M	A	1
			4	0.075M	A	2
(EH-25LV TO EH-29LV)			5	0.075M		SPARE
			6	0.075M	C	PCKT 1
(T-24 TO T-25)			7	0.11M		SPARE
			8	0.11M	M	TCKT 3
EH-28MV TO EH-29MV	G-G	8 WAY	1	0.075M		SPARE
			2	0.075M		SPARE
			3	0.075M	A	1
			4	0.075M	A	2
(EH-25LV TO EH-29LV)			5	0.075M		SPARE
			6	0.075M	C	PCKT 1
(T-24 TO T-25)			7	0.11M		SPARE
			8	0.11M	M	TCKT 3
EH-29MV TO EH-30MV	G-G	8 WAY	1	0.075M		SPARE
			2	0.075M		SPARE
			3	0.075M	A	1
			4	0.075M	A	2
EH-29LV TO EH-31 LV			5	0.075M		SPARE
			6	0.075M	C	PCKT 4
T-25 TO T-26			7	0.11M		SPARE
			8	0.11M	M	TCKT 3
(EH-29LV TO EH-31 LV)	H-H	4 WAY	1	0.075M		SPARE
			2	0.075M	C	PCKT 4
(T-25 TO T-26 TO T-27)			3	0.11M		SPARE
			4	0.11M	M	TCKT 3

LOCATION	SECTION	DUCT BANK SIZE	DUCT NUMBER	DUCT SIZE	CABLE	CIRCUIT
E1 TO E-3 UNDER RWY 2+517	R1-R1	20 WAY	1	0.11M		SPARE
MEDIUM VOLTAGE			2	0.11M		SPARE
			3	0.11M		SPARE
			4	0.11M		SPARE
			5	0.11M		SPARE
			6	0.11M		SPARE
			7	0.11M	A	8
			8	0.11M	A	9
E2 TO E-4 UNDER RWY 2+517			9	0.11M		SPARE
LOW VOLTAGE			10	0.11M		SPARE
			11	0.11M		SPARE
			12	0.11M	C	PCKT 7
			13	0.2M		SPARE
			14	0.2M		COLLISION 2
			15	0.2M		COLLISION 3
			16	0.2M		COLLISION 4
T-2 TO T-3 UNDER RWY			17	0.11M		SPARE
			18	0.11M		SPARE
			19	0.11M	K	TCKT 7
			20	0.11M		COLLISION
T-4 TO T-5 UNDER RWY 2+825	R2-R2	9 WAY	1	0.11M		SPARE
			2	0.11M		SPARE
			3	0.11M		SPARE
			4	0.11M		SPARE

CIRCUIT DESCRIPTION	CIRCUIT NUMBER	CABLE
APPROACH	1	A
APPROACH	2	A
TAXIWAY EDGE	21	A
TAXIWAY EDGE	22	A
THRESHOLD	3	A
THRESHOLD	4	A
RUNWAY EDGE & END	5	A
RUNWAY EDGE & END	6	A
PAPI	8	A
PAPI	9	A
NAVAID	PCKT 1	C
FAR FIELD MONITOR	PCKT 2	E
CEILOMETER	PCKT 3	G
NAVAID	PCKT 4	C
GLIDE SLOPE	PCKT 5	D
MIDDLE MARKER	PCKT 6	G
AWOS	PCKT 7	C
AWOS	PCKT 8	G
BAK SYSTEM	PCKT 9	B
ZK1	PCKT 10	F
ZK2	PCKT 11	H
SK-B4 - BAK SYSTEM	TCKT 1	J
SK-B4 - AWOS	TCKT 2	K
SK-B4 - T-25	TCKT 3	M
T-25 - FFM	TCKT 4	K
T-25 - CEILOMETER	TCKT 5	K
T-25 - T-27	TCKT 6	L
T-27 - GLIDE SLOPE	TCKT 7	K
T-27 - MM	TCKT 8	K
	SPARE	

CABLE	CABLE TYPE
A	HVL 1x6+2.5mm2
A-1 (600 V)	HVL 1x2.5mm2
A-2 (5 KV)	HVL 1x6 mm2
B	4xYKY 1x300mm2
C	YKY 4x120mm2
D	YKY 4x50mm2
E	YKY 3x35mm2
F	YAKY 4x25mm2
G	YKY 4x10mm2
H	YAKY 3x10mm2
J	XzTKMXpw2x2x0,8
K	XzTKMXpw4x2x0,8
L	XzTKMXpw8x2x0,8
M	XzTKMXpw20x2x0,8

NOTES:

1. "A" CABLE IS AN EQUIVALENT FOR FAA-L-824 CABLE
2. E.G. EH-21MV & EH-21LV ARE SEPARATE HANDHOLES FOR MEDIUM AND LOW VOLTAGE. KEEP DUCTS SEPARATED WHEN VOLTAGE LEVEL SPECIFIED. FOR DUCT BANKS SECTIONS SEE SHEET E-531.

US Army Corps of Engineers®

MARK	DESCRIPTION	DATE

DESIGNED BY: K. LOPEZ
DRAWN BY: L. LAWICKA
CHECKED BY: K. LEPERA
SUBMITTED BY: D. DIEHL
SIZE: ANSI D
ISSUE DATE: MARCH 2017
SOLICITATION NO.:
PROJECT NO.: PAY215002A

U.S. ARMY CORPS OF ENGINEERS
KONRAD ADENAUER RING 39
WIESBADEN, D-65187 / GERMANY

AECOM INTERNATIONAL, INC.
SIEMENSSTRAGE 10
NEU-ISENBURG, 63263

ERI: IMPROVE SUPPORT INFRASTRUCTURE
LASK AB, POLAND

DUCTBANK DETAILS 3
KANALIZACJA KABLOWA - SZCZEGÓLY 3

SHEET ID
E-537

C:\PWWORKING\AECOM_EU\LLAWICKA\D0159839\15-D-0008-0003EEA507.DWG
5/13/2016 LUCYNA.LAWICKA SCALE: NTS

100%

MANHOLES, HANDHOLES AND JUNCTION BOXES SCHEDULE

	Station	Offset
E1	2518.48	53.53L
E2	2520.28	53.53L
E3	2518.69	53.14R
E4	2520.49	53.14R

	Station	Offset
T1	2662.85	305.16L
T2	2516.62	55.80L
T3	2516.62	55.68R
T4	2825.00	48.63L
T5	2825.00	47.19R
T6	2672.97	319.41L
T7	2637.58	417.26L
T8	2618.02	427.75L
T9	2575.00	437.85L
T10	2541.73	443.54L
T11	2502.88	454.75L
T12	2509.83	510.37L
T13	2794.77	287.07L
T14	2912.068	304.90L
T15	2999.78	317.05L
T16	3081.58	301.76L
T17	3183.62	245.81L
T18	3270.32	195.57L
T19	3355.83	143.73L
T20	3452.12	85.03L
T21	3515.72	4.53L
T22	3515.72	2.82R
T23	3615.73	2.76R
T24	3715.73	2.70R
T25	3818.34	2.65R
T26	3893.86	2.61R
T27	3948.81	2.60R
T28	2654.89	156.52L
T29	2642.77	110.11L
T30	2582.50	72.50L
T31	2579.73	56.02L
T32	2605.64	55.45R
T33	2606.70	126.24R
T34	2668.97	126.42R

	Station	Offset
EH-1	2469.14	90.12L
EH-2	2518.73	80.99L
EH-3A	2606.67	53.61L
EH-3B	2698.67	53.62L
EH-3C	2790.60	53.62L
EH-4	2644.02	52.29L
EH-5	2882.12	53.63L
EH-6	2930.69	102.17L
EH-7	3030.52	102.02L
EH-8	3004.26	50.62L
EH-9	3004.22	36.20L
EH-10A	3030.47	50.61L
EH-10B	3060.94	50.71L
EH-11	3091.46	50.70L
EH-12	3121.94	50.70L
EH-13	3157.36	50.71L
EH-14	3157.37	4.17R
EH-15	3295.46	4.17R
EH-16	3433.50	4.02R
EH-17MV	3516.54	3.97R
EH-17LV	3517.54	4.97R
EH-18MV	3544.12	3.95R
EH-19MV	3571.43	4.08R
EH-20MV	3597.84	3.92R
EH-21MV	3624.34	3.92R
EH-21LV	3625.34	4.92R
EH-22MV	3650.84	3.92R
EH-23MV	3677.34	3.92R
EH-24MV	3703.93	4.05R
EH-25MV	3729.34	3.92R
EH-25LV	3730.34	4.92R
EH-26MV	3754.84	3.92R
EH-27MV	3780.34	3.92R
EH-28MV	3805.84	3.92R
EH-29MV	3019.16	3.80R
EH-29LV	3020.16	4.80R
EH-30MV	3031.34	3.92R
EH-31LV	3949.62	3.75R
EH-32	2501.38	52.16R
EH-33	2550.03	53.52R
EH-34	2645.10	53.93R

	Station	Offset
J-1	2507.02	59.41L
J-2	2505.49	57.85L
J-3	2550.08	52.39L
J-4	2566.64	52.58L
J-5	2600.10	52.58L
J-6	2643.36	41.95L
J-7	3000.00	35.00L
J-8	2999.85	32.90L
J-9	3181.25	4.16R
J-10	3210.01	4.14R
J-11	3238.81	4.13R
J-12	3267.63	4.11R
J-13	3295.48	0.72R
J-14	3295.41	5.29L
J-15	3295.45	12.02L
J-16	3295.42	5.81R
J-17	3295.41	12.04R
J-18	3323.45	4.08R
J-19	3351.03	4.06R
J-20	3378.61	4.05R
J-21	3406.29	4.03R
J-22	3433.50	0.61R
J-23	3433.47	7.65L
J-24	3433.47	15.72L
J-25	3433.46	7.77R
J-26	3433.46	15.75R
J-27	3461.37	4.00R
J-28	3488.96	3.99R
J-29	3571.39	0.47R
J-30	3571.41	7.23L
J-31	3571.42	12.66L
J-32	3571.39	19.36L
J-33	3571.41	4.43R
J-34	3571.42	9.79R
J-35	3571.43	16.57R

	Station	Offset
J-36	3703.91	0.74R
J-37	3703.87	7.93L
J-38	3703.89	14.72L
J-39	3703.91	22.78L
J-40	3703.91	7.96R
J-41	3703.93	14.71R
J-42	3703.91	22.81R
J-43	3820.37	1.58R
J-44	3951.35	2.07R
J-45	2603.59	151.41L
J-46	2662.91	210.29L
J-47	2666.23	230.89L
J-48	2669.59	251.80L
J-49	2673.40	275.10L
J-50	2566.76	53.05R
J-51	2600.28	53.65R
J-52	2644.61	41.88R
J-53	3000.47	40.73R
J-54	3002.56	40.77R
J-55	2566.95	127.80R

CIRCUIT DESCRIPTION	CIRCUIT NUMBER	CABLE
APPROACH	1	A
APPROACH	2	A
TAXIWAY EDGE	21	A
TAXIWAY EDGE	22	A
THRESHOLD	3	A
THRESHOLD	4	A
RUNWAY EDGE & END	5	A
RUNWAY EDGE & END	6	A
PAPI	8	A
PAPI	9	A
NAVAID	PCKT 1	C
FAR FIELD MONITOR	PCKT 2	E
CEILOMETER	PCKT 3	G
NAVAID	PCKT 4	C
GLIDE SLOPE	PCKT 5	D
MIDDLE MARKER	PCKT 6	G
AWOS	PCKT 7	C
AWOS	PCKT 8	G
BAK SYSTEM	PCKT 9	B
ZK1	PCKT 10	F
ZK2	PCKT 11	H
SK-B4 - BAK SYSTEM	TCKT 1	J
SK-B4 - AWOS	TCKT 2	K
SK-B4 - T-25	TCKT 3	M
T-25 - FFM	TCKT 4	K
T-25 - CEILOMETER	TCKT 5	K
T-25 - T-27	TCKT 6	L
T-27 - GLIDE SLOPE	TCKT 7	K
T-27 - MM	TCKT 8	K
	SPARE	

CABLE	CABLE TYPE
A	HVL 1x6+2.5mm2
A-1 (600 V)	HVL 1x2.5mm2
A-2 (5 KV)	HVL 1x6 mm2
B	4xYKY 1x300mm2
C	YKY 4x120mm2
D	YKY 4x50mm2
E	YKY 3x35mm2
F	YAKY 4x25mm2
G	YKY 4x10mm2
H	YAKY 3x10mm2
J	XzTKMXpw2x2x0,8
K	XzTKMXpw4x2x0,8
L	XzTKMXpw8x2x0,8
M	XzTKMXpw20x2x0,8

NOTES:

1. "A" CABLE IS AN EQUIVALENT FOR FAA-L-824 CABLE

US Army Corps of Engineers®

MARK	DESCRIPTION	DATE

DESIGNED BY: K. LOPEZ
DRAWN BY: L. LAWICKA
CHECKED BY: K. LEPERA
SUBMITTED BY: D. DIEHL
SIZE: ANSI D
ISSUE DATE: MARCH 2017
SOLICITATION NO.:
PROJECT NO.: PAY215002A

U.S. ARMY CORPS OF ENGINEERS
KONRAD ADENAUER RING 39
WIESBADEN, D-65187 / GERMANY

AECOM INTERNATIONAL, INC.
SIEMENSSTRAGE 10
NEU-ISENBURG, 63263

ERI: IMPROVE SUPPORT INFRASTRUCTURE
ŁASK AB, POLAND

DUCTBANK DETAILS 4
KANALIZACJA KABLOWA - SZCZEGÓŁY 4

SHEET ID

E-538

C:\PWWORKING\AECOM_EU\LLAWICKA\D0159839\15-D-0008-0003EEA507.DWG
5/13/2016 LUCYNA.LAWICKA SCALE: NTS

100%

THIS DOCUMENT CONTAINS PROPRIETARY INFORMATION AND SUCH INFORMATION MAY NOT BE DISCLOSED TO OTHERS FOR ANY PURPOSE NOR FOR MANUFACTURING PURPOSES WITHOUT WRITTEN PERMISSION FROM SELEX SISTEMI INTEGRATI INC.

DWG NO. 651360 | SH 1 | REV –

REVISIONS

REV	DESCRIPTION	DATE	APPROVED
–	RELEASED PER ERN LC01032	2/18/00	K. RIEKE

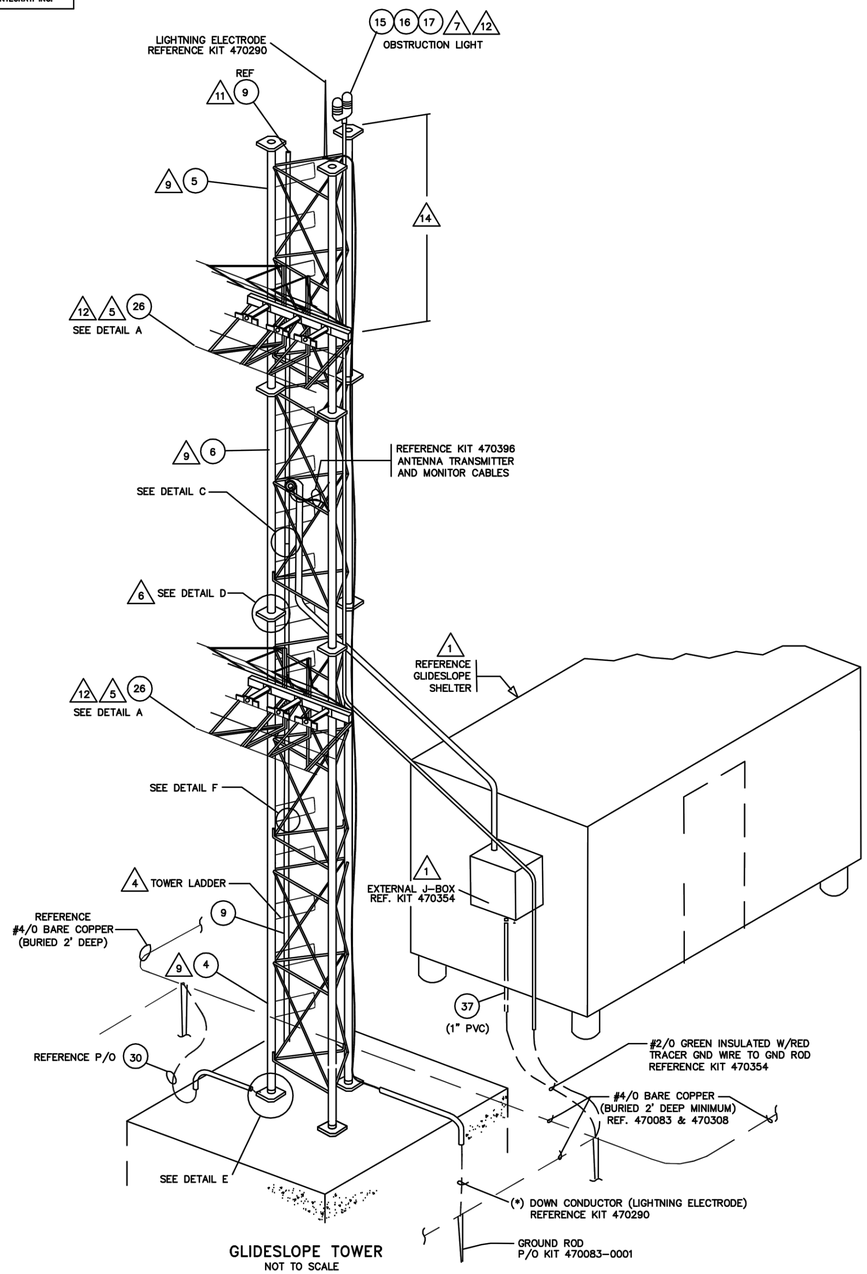

GLIDESLOPE TOWER
NOT TO SCALE

(*) LENGTH DETERMINED BY TOWER HEIGHT REQUIREMENTS.

NOTES:

1. THIS DRAWING IS DIAGRAMMATIC IN NATURE. CHARACTERISTICS OF NEW AND EXISTING EQUIPMENT TO BE RELOCATED MAY VARY.
2. ALL HARDWARE SHALL BE STAINLESS STEEL UNLESS OTHERWISE NOTED.
3. SEE THIS SHEET FOR PARTS LIST
4. FINAL ANTENNA ELEVATIONS TO BE FIELD DETERMINED
5. RE = RELOCATED
   CF = CONTRACTOR FURNISHED

PART NUMBER	ITEM	QTY.	DESCRIPTION
CF	0001-9195-303	30	1 ASSEMBLY, TOWER GROUND
RE	0002-1512-201	29	12 ANGLE, SUPPORT
CF	2450-2242-007	28	12 CLAMP, "U" 3" DIA. X 3/8" – 16
RE	0002-1510-402	27	12 CHANNEL, MOUNTING
RE	1000-0579-202	26	3 ELEMENT, ANTENNA
CF	2077-6810-001	25	24 BOLT, HEX 3/8" – 16 X 1 – 1/2"
RE	0002-1511-201	24	24 LOCK, CHANNEL
CF	2100-0123-001	23	48 NUT, HEX 3/8" – 16
CF	2800-0153-001	22	48 WASHER, LOCK 3/8"
CF	2450-0079-001	21	1 ADJUSTABLE LANYARD (NOT SHOWN)
CF	1000-1672-401	20	2 SLEEVE ASSY (NOT SHOWN)
CF	0002-3285-301	19	2 SAFETY HARNESS (NOT SHOWN)
RE	0001-9680-302	18	3 ALIGNMENT GUIDE
CF	8900-0126-001	17	1 LOCK NUT, 3/4"
RE	8910-0250-001	16	1 PIPE NIPPLE, 3/4" X 1 3/8", GALV
RE	6700-0095-001	15	1 OBSTRUCTION LIGHT ASSY
CF	2100-0123-001	14	40 NUT, HEX 3/8" – 16
CF	2077-6453-011	13	20 BOLT, TAP 3/8" – 16 X 3"
RE	0001-9692-302	12	10 CLAMP, LADDER RUNG
CF	2077-6806-001	11	6 BOLT, TAP 5/16" – 18 X 1"
RE	0001-9679-302	10	3 PLATE, SPLICE
RE	0001-9677-404	9	3 RAIL, CARRIER 20'
CF	2076-4402-001	8	48 BOLT, HEX 7/8" – 9 X 2-1/2"
RE	0002-1628-402	7	1 SECTION, TOWER 5' WHITE (NOT SHOWN)
RE	0001-1628-403	6	1 SECTION, TOWER 10' ORANGE
RE	0002-1628-401	5	1 SECTION, TOWER 5' ORANGE
RE	0002-1628-404	4	2 SECTION, TOWER 20' (BASE) ORANGE & WHITE
CF	2100-0879-001	3	72 NUT, HEX 7/8" – 9
CF	2300-0319-001	2	60 WASHER, LOCK 7/8"
CF	0001-9480-302	1	1 STOP SLEEVE (NOT SHOWN)

8 PARTS LIST: ANTENNA PRODUCTS CO. (APC)

DASH NO.	NEXT ASSY	USED ON
APPLICATION		

UNLESS OTHERWISE SPECIFIED DIMENSIONS ARE IN INCHES
TOLERANCES ARE:
ANGLES ±3°
DECIMALS .XX ±.02 .XXX ±.005

MATERIAL: N/A

FINISH: N/A

CONTRACT NO.

APPROVALS		DATE
DRAWN	BRASE	2/8/99
CHECKED	K. RIEKE	2/28/00
ENGR	K. RIEKE	2/28/00
AUTOCAD GENERATED		

SELEX Sistemi Integrati
11300 W. 89th Street – Overland Park, Kansas 66214 – U.S.A.

KIT, GS ANTENNA INSTALLATION (REFERENCE)

SIZE D | CAGE CODE 64415 | DWG NO. 651360 | REV –
SCALE N/A | SHEET 1 OF 2

US Army Corps of Engineers ®

MARK	DESCRIPTION	DATE

DESIGNED BY: K. THOMAS
DRAWN BY: D. BAUMGARDNER
CHECKED BY: D. HUGHES
SUBMITTED BY: S. BEHL
SIZE: ANSI D
ISSUE DATE: MARCH 2017
SOLICITATION NO.:
CONTRACT NO.: PAYZ15002A

U.S. ARMY CORPS OF ENGINEERS
KONRAD ADENAUER RING 39
WIESBADEN, D-65187 / GERMANY

AECOM INTERNATIONAL, INC.
SIEMENSSTRAGE 10
NEU-ISENBURG, 63263

ERI: IMPROVE SUPPORT INFRASTRUCTURE
LASK AB, POLAND

GLIDE SLOPE DETAILS - 1
RUNWAY 28

SHEET ID
E-550

C:\PWWORKING\AECOM_EU\DBAUMGARDNER_TM\D0159839\15-D-0008-0003EEA505.DWG
5/12/2016 DAVID.BAUMGARDNER 1:500

100%

THIS DOCUMENT CONTAINS PROPRIETARY INFORMATION AND SUCH INFORMATION MAY NOT BE DISCLOSED TO OTHERS FOR ANY PURPOSE NOR FOR MANUFACTURING PURPOSES WITHOUT WRITTEN PERMISSION FROM SELEX SISTEMI INTEGRATI INC.

DWG NO. 651360 SH 2 REV –

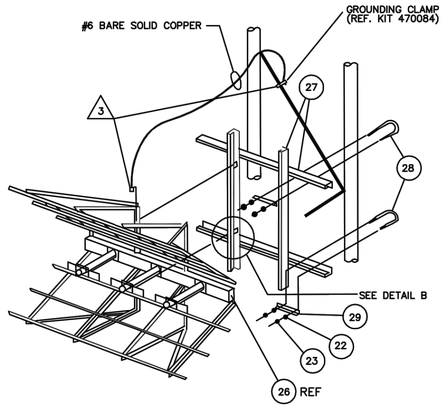

DETAIL A
ANTENNA ELEMENT MOUNTING/GROUNDING
NOT TO SCALE

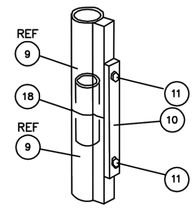

DETAIL C
SAFETY CLIMBING RAIL – JOINT
NOT TO SCALE

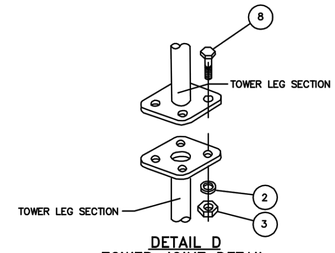

DETAIL D
TOWER JOINT DETAIL
NOT TO SCALE

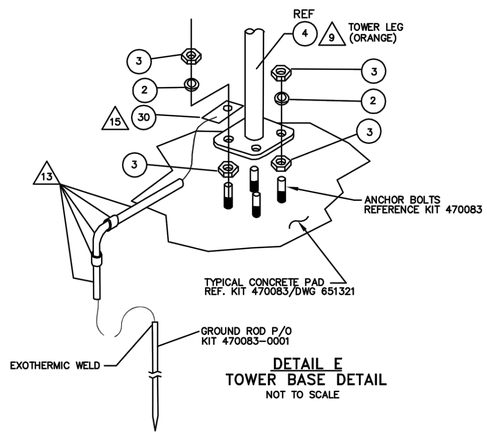

DETAIL E
TOWER BASE DETAIL
NOT TO SCALE

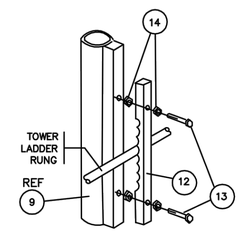

DETAIL F 10
SAFETY CLIMBING RAIL–MOUNTING
NOT TO SCALE

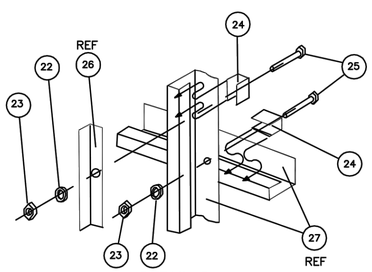

DETAIL B
ANTENNA MOUNTING DETAIL
NOT TO SCALE

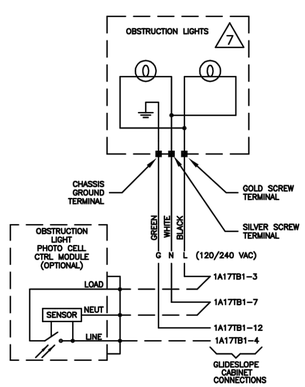

OBSTRUCTION LIGHTS WIRING DETAILS

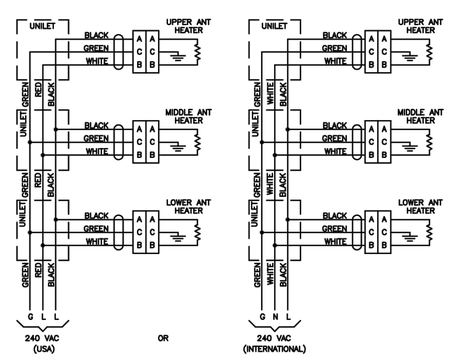

ANTENNA HEATERS WIRING DETAILS

DETAIL G 12
WIRING DETAILS

NOTES:

1. SHELTER AND JUNCTION BOX ARE SHOWN FOR REFERENCE ONLY. ACTUAL LOCATION AND INSTALLATION MAY VARY.

2. TOWER CLIMBING SAFETY EQUIPMENT IS PROVIDED WITH TOWER (REF KIT 470084). SAFETY HARNESS (ITEM 19) SHOULD BE WORN AT ALL TIMES WHEN CLIMBING TOWER. (NOTE: BEFORE CLIMBING, ENSURE THAT ALL SAFETY EQUIPMENT IS IN GOOD WORKING CONDITION. SLEEVE ASSY (ITEM 20) SHOULD BE CHECKED FOR PROPER OPERATION BY VERIFYING THAT SLEEVE WILL EASILY SLIDE (RATCHET) UP THE CARRIER RAIL (ITEM 9), BUT WILL NOT SLIDE DOWN THE RAIL UNLESS THE SLEEVE ASSEMBLY RATCHET RELEASE MECHANISM IS INTENTIONALLY OPERATED.) INSTRUCTIONS FOR USE OF SAFETY EQUIPMENT: PUT ON SAFETY HARNESS AND ADJUST STRAPS FOR SNUG FIT. ATTACH SLEEVE ASSEMBLY TO SAFETY HARNESS. SLIDE SLEEVE ASSEMBLY OVER CARRIER RAIL AND CLIMB UP TOWER LADDER. TO CLIMB DOWN TOWER, OPERATE SLEEVE ASSEMBLY RATCHET RELEASE MECHANISM TO ALLOW SLEEVE ASSEMBLY TO SLIDE DOWN THE CARRIER RAIL. LANYARD (ITEM 21, NOT SHOWN) IS SUPPLIED AS ADDITIONAL SAFETY DEVICE. TO USE, ATTACH ONE END OF LANYARD TO SAFETY HARNESS. ATTACH OPPOSITE END OF LANYARD RUNG OF TOWER.

3. SEE DETAIL A. GROUND EACH ANTENNA ASSY TO TOWER AS FOLLOWS. UNLESS OTHERWISE INDICATED, THE FOLLOWING ITEMS ARE PART OF KIT 470084.
   a) PRIOR TO MOUNTING ANTENNAS ON TOWER, MOUNT GROUND LUG (ITEM 5, NOT SHOWN) ON EACH ANTENNA, AS FOLLOWS:
      1) LOCATE AND DRILL 5/16" [8mm] DIAMETER LUG MOUNTING HOLE IN ANTENNA SUPPORT FRAME. (P/O ANTENNA ITEM 1)
      2) IMMEDIATELY PRIOR TO MOUNTING GND LUG, CAREFULLY REMOVE PAINT TO EXPOSE GALVANIZED SURFACE OF ANTENNA SUPPORT FRAME WITHIN LUG MOUNTING AREA. CAUTION:DO NOT REMOVE GALVANIZED COATING.
      3) MOUNT GROUND LUG ON ANTENNA SUPPORT FRAME. ORDER OF ASSEMBLY:
         1/4–20 HEX BOLT (ITEM 7)
         1/4" FLAT WASHER (ITEM 8)
         GROUND LUG
         ANTI–OXIDANT COMPOUND (APPLY PER MANUFACTURERS INSTRUCTIONS TO EXPOSED METAL SURFACE OF ANTENNA SUPPORT FRAME.)
         ANTENNA SUPPORT FRAME
         1/4" FLAT WASHER (ITEM 8)
         1/4" LOCK WASHER (ITEM 9)
         1/4–20 HEX NUT (ITEM 10)
   b) AFTER FINALIZING ANTENNA LOCATION (SEE NOTE 5), MOUNT GROUNDING CLAMP (ITEM 11) ON NEARBY TOWER RUNG AS FOLLOWS:
      1) IMMEDIATELY PRIOR TO MOUNTING GROUNDING CLAMP, CAREFULLY REMOVE PAINT TO EXPOSE GALVANIZED SURFACE OF TOWER RUNG WITHIN CLAMP MOUNTING AREA. CAUTION:DO NOT REMOVE GALVANIZED COATING.
      2) APPLY ANTI–OXIDANT COMPOUND (ITEM 15) PER MANUFACTURERS INSTRUCTIONS TO EXPOSED METAL SURFACE OF TOWER RUNG.
      3) MOUNT GROUNDING CLAMP TO TOWER RUNG.
   c) CUT WIRE (ITEM 6) TO LENGTH AND CONNET BETWEEN GROUND LUG AND GROUNDING CLAMP.

4. POSITION TOWER SUCH THAT THE CLIMBING LADDER IS LOCATED AWAY FROM RUNWAY.

5. TWO ANTENNA CONFIGURATION IS SHOWN. ADD THIRD ANTENNA FOR CAPTURE–EFFECT OPTION. PARTS LIST QUANTITIES REFLECT THREE ANTENNA OPTION. APPLICABLE NUMBER OF UNILETS SHALL BE INSTALLED TO ACCOMODATE THREE ANTENNAS.

6. NOT USED.

7. INSTALL OBSTRUCTION LIGHT FIXTURE (ITEM 15) PER KIT 470354. FIXTURE IS SUPPLIED WITH 120V BULBS. IF FIXTURE IS TO BE WIRED FOR 240 VAC, REPLACE 120V BULBS WITH 240V BULBS (REF. KIT 470354, ITEM 62).

8. PARTS LIST SHOWN FOR REFERENCE ONLY. PART NUMBERS ARE APC NUMBERS (MANUFACTURER, MINERAL WELLS, TEXAS). QUANTITIES SHOWN ARE FOR CAPTURE–EFFECT VERSION.

9. TOWER SECTIONS SHALL BE ARRANGED TO ACHIEVE AN ALTERNATING ORANGE AND WHITE PATTERN WITH ORANGE AT TOP AND BOTTOM OF TOWER.

10. SAFETY CARRIER RAIL, (ITEM 9) MUST BE MOUNTED ON OUTSIDE OF TOWER.

11. INSTALL STOP SLEEVE (ITEM 1, NOT SHOWN) AT TOP OF UPPER CARRIER RAIL (ITEM 9).

12. INSTALL AC TOWER WIRING TO ANTENNA HEATERS AND OBSTRUCTION LIGHTS PER DETAIL G. (NOTE: DETAIL G SHOWS ANTENNA HEATER WIRING DETAIL FOR 3 ANTENNA VERSION. WIRING IS IDENTICAL FOR 2 ANTENNA VERSION.) MAKE THE FOLLOWING CONNECTIONS USING WIRE, WIRE NUTS, CABLE, LUGS, ETC. FROM POWER CABLE KIT (REF. KIT 470079, NOT SHOWN). ANTENNA HEATER AND OBSTRUCTION LIGHTS MAY SHARE SAME GROUND WIRE.
   a) ANTENNA HEATER WIRING: USE THREE CONDUCTOR CABLE (REF. KIT 470079, ITEM 7) TO CONNECT FROM EACH ANTENNA HEATER CONNECTOR TO INDIVIDUAL #12 AWG WIRES (REF. KIT 470079, ITEMS 1,2 & 3 OR 2, 3 & 5) INSIDE UNILET (REF. KIT 470354, ITEM 49). USE WIRE NUTS (REF. KIT 470079, ITEM 8) TO MAKE CONNECTIONS INSIDE UNILET.
   b) OBSTRUCTION LIGHT WIRING: USE LUGS (REF. KIT 470079,ITEM 9) TO CONNECT #12 AWG WIRES (REF. KIT 470079, ITEMS 1, 2 &3) TO OBSTURUCTION LIGHT TERMINALS.
   c) PHOTOCELL (OPTIONAL EQPT) WIRING: USE WIRE NUTS (REF. KIT 470079, ITEM 8) TO CONNECT #12 AWG WIRES (REF. KIT 470079 ITEMS 1, 2 & 3) TO PHOTOCELL ASSEMBLY (REF. KIT 470354–0002, ITEMS 66 & 67, NOT SHOWN).

13. SEE DETAIL E. INSTALL TUBING ON TOP OF FOUNDATION FOR TOWER GROUND WIRE (ITEM 30). FIELD CUT PVC TUBING (REF. KIT 470084, ITEM 12) TO LENGTH AS REQUIRED. USE PVC CEMENT (REF. KIT 470084, ITEM 16) TO ATTACH PVC ELBOW (REF. KIT 470084, ITEM 13) TO TUBING USING PVC COUPLERS (REF. KIT 470084, ITEM 14).

14. AFTER MAKING FINAL ANTENNA HEIGHT ADJUSTMENTS, THE DISTANCE BETWEEN CENTER OF UPPER ANTENNA AND TOP OF TOWER (EXCLUDING OBSTRUCTION LIGHT AND LIGHTNING ROD) SHOULD NOT EXCEED 5' [1.5M].

15. SEE DETAIL E. IMMEDIATELY PRIOR TO MOUNTING COPPER TOWER GROUNDING LUG (ITEM 30), CAREFULLY REMOVE PAINT TO EXPOSE GALVANIZED SURFACE OF TOWER BASE (ITEM 4) FLANGE WITHIN LUG MOUNTING AREA. CAUTION: DO NOT REMOVE GALVANIZED COATING. PRIOR TO MOUNTING LUG, APPLY ANTI–OXIDANT COMPOUND (REF. KIT 470084. ITEM 15, NOT SHOWN) PER MANUFACTURERS DIRECTIONS TO BARE METAL SURFACE OF TOWER FLANGE. ROUTE TOWER GROUND WIRE (P/O ITEM 30)THROUGH PVC TUBING (SEE NOTE 13) AND CONNECT TO EXISTING GROUND ROD (REF. KIT 470083, ITEM 1) USING AN EXOTHERMIC WELD.

SELEX Sistemi Integrati
11300 W. 89th Street
Overland Park, Kansas 66214 U.S.A.

DRAWN	BRASE	2/16/00
CONTRACT NO.		

SIZE	CAGE CODE	DWG. NO.	REV
D	64415	651360	–
SCALE N/A		SHEET 2 OF 2	

US Army Corps of Engineers ®

MARK	DESCRIPTION	DATE

DESIGNED BY: K. THOMAS	ISSUE DATE: MARCH 2017
DRAWN BY: D. BAUMGARDNER	SOLICITATION NO.:
CHECKED BY: D. HUGHES	CONTRACT NO.: PAYZ15002A
SUBMITTED BY: SCHERL	
SIZE: ANSI D	

U.S. ARMY CORPS OF ENGINEERS
KONRAD ADENAUER RING 39
WIESBADEN, D-65187 / GERMANY

AECOM INTERNATIONAL, INC.
SIEMENSSTRASE 10
NEU-ISENBURG, 63263

ERI: IMPROVE SUPPORT INFRASTRUCTURE
ŁASK AB, POLAND

GLIDE SLOPE DETAILS - 2
RUNWAY 28

SHEET ID
E-551

C:\PWWORKING\AECOM_EU\DBAUMGARDNER_TM\D0159839\15-D-0008-0003EEA505.DWG
5/12/2016 DAVID.BAUMGARDNER 1:500

100%

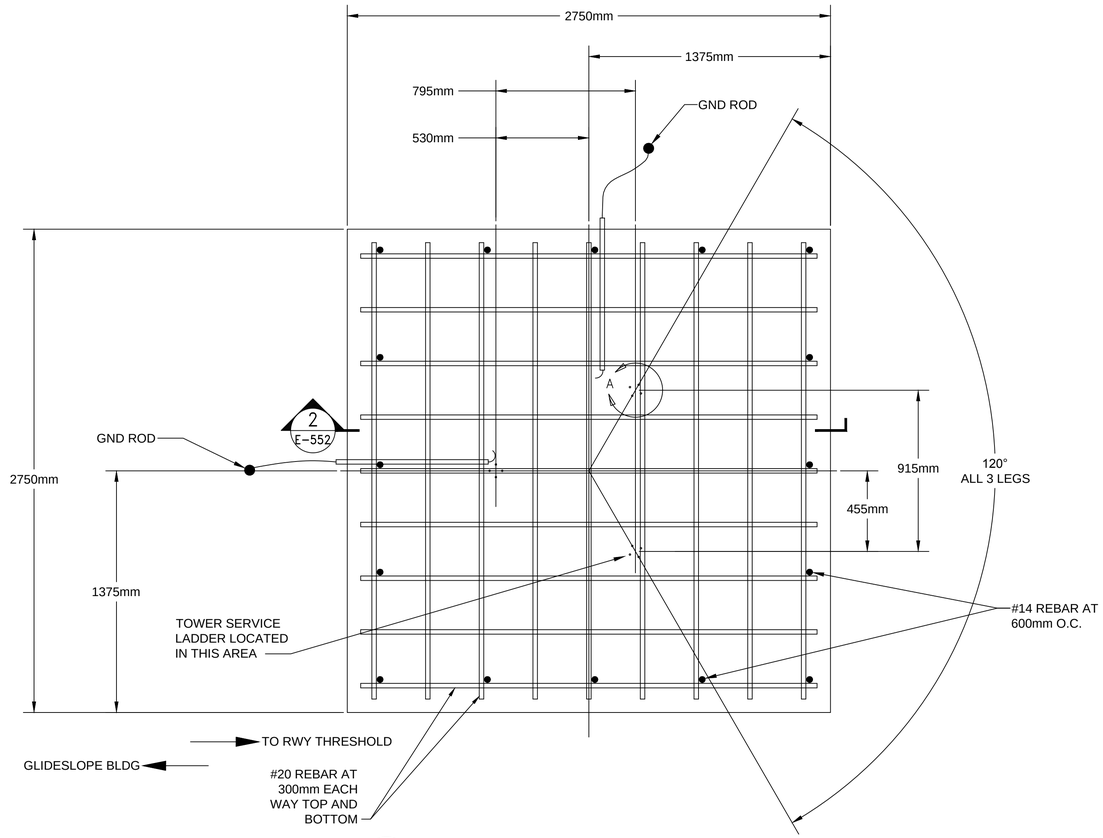

1 E-552 PLAN - GLIDESLOPE TOWER FOUNDATION
NOT TO SCALE

FOUNDATION NOTES:

GENERAL

1. FOR LOCATIONS AND DIMENSIONS OF SLEEVES, OPENINGS, ANCHOR BOLTS, EMBEDDED OR ATTACHED ITEMS, REFER TO MECHANICAL AND ELECTRICAL DRAWINGS.

FOUNDATIONS:

1. SUBGRADE COMPACTED TO 95% OF MAXIMUM DENSITY WHEN TESTED BY ASSHTO T180.
2. CRUSHED STONE BASE COMPACTED TO 95% OF MAXIMUM DENSITY WHEN TESTED BY AASHTO T180.
3. FOUNDATIONS ARE DESIGNED FOR 143 kpa SOIL BEARING PRESSURE.

CONCRETE:

1. CONCRETE SHALL HAVE A MINIMUM 28 DAY CYLINDER COMPRESSIVE STRENGTH OF 30 MPA.
2. ALL REINFORCING STEEL SHALL BE DEFORMED BILLET STEEL BARS CONFORMING TO ASTM A615 GRADE 60.
3. WELDED WIRE FABRIC SHALL CONFORM TO ASTM A185.
4. MINIMUM CONCRETE PROTECTION, SPLICES AND HOOKS FOR REINFORCING STEEL CONFORMS TO ACI 318.
5. ALL REINFORCEMENT MARKED CONTINUOUS SHALL BE LAPPED AT SPLICES, CORNERS, AND HOOKED AT NON-CONTINUOUS ENDS.

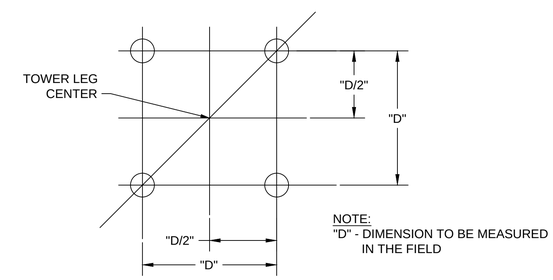

NOTE:
"D" - DIMENSION TO BE MEASURED IN THE FIELD

A E-552 DETAIL - ANCHOR BOLT LOCATIONS
NOT TO SCALE

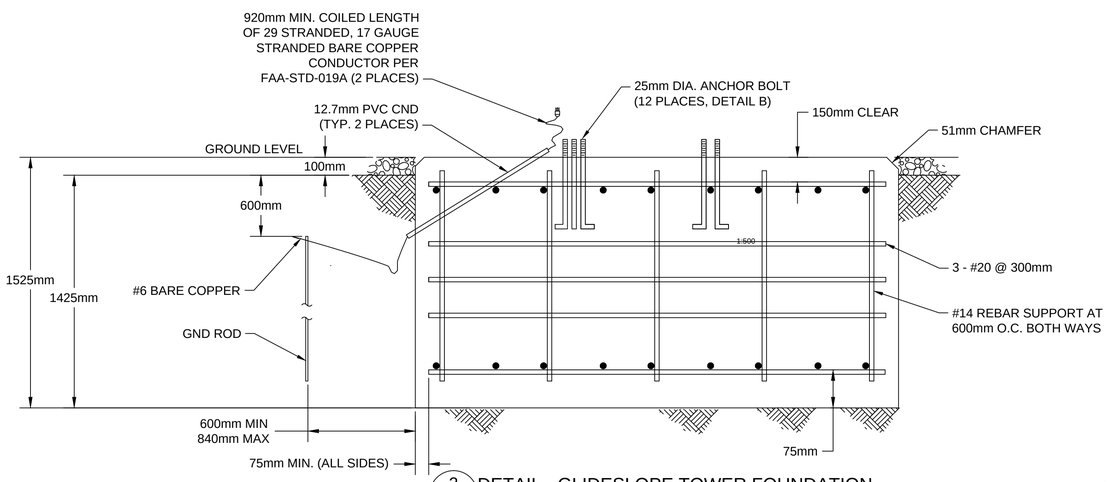

2 E-552 DETAIL - GLIDESLOPE TOWER FOUNDATION
NOT TO SCALE

NOTES:

1. FOR GLIDE SLOPE TOWER LOCATION SEE ELECTRICAL DRAWINGS

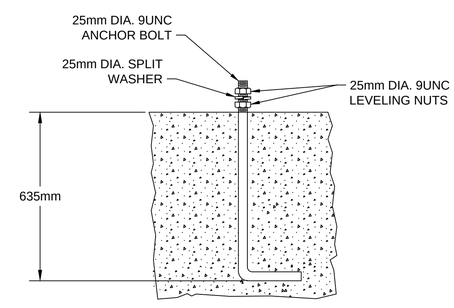

B E-552 DETAIL - TYPICAL ANCHOR BOLT
NOT TO SCALE

US Army Corps of Engineers®

MARK	DESCRIPTION	DATE

DESIGNED BY: K. THOMAS
DRAWN BY: D. BAUMGARDNER
CHECKED BY: D. HUGHES
SUBMITTED BY: D. DIEHL
SIZE: ANSI D
ISSUE DATE: MARCH 2017
SOLICITATION NO.:
CONTRACT NO.: PAYZ15002A

U.S. ARMY CORPS OF ENGINEERS
KONRAD ADENAUER RING 39
WIESBADEN, D-65187 / GERMANY

AECOM INTERNATIONAL, INC.
SIEMENSSTRAßE 10
NEU-ISENBURG, 63263

ERI: IMPROVE SUPPORT INFRASTRUCTURE
LASK AB, POLAND

GLIDE SLOPE DETAILS - 3
RUNWAY 28

SHEET ID
E-552

C:\PW\WORKING\AECOM_EU\DBAUMGARDNER_TM\D0159839\15-D-0008-0003EEA505.DWG
5/12/2016 DAVID.BAUMGARDNER

100%

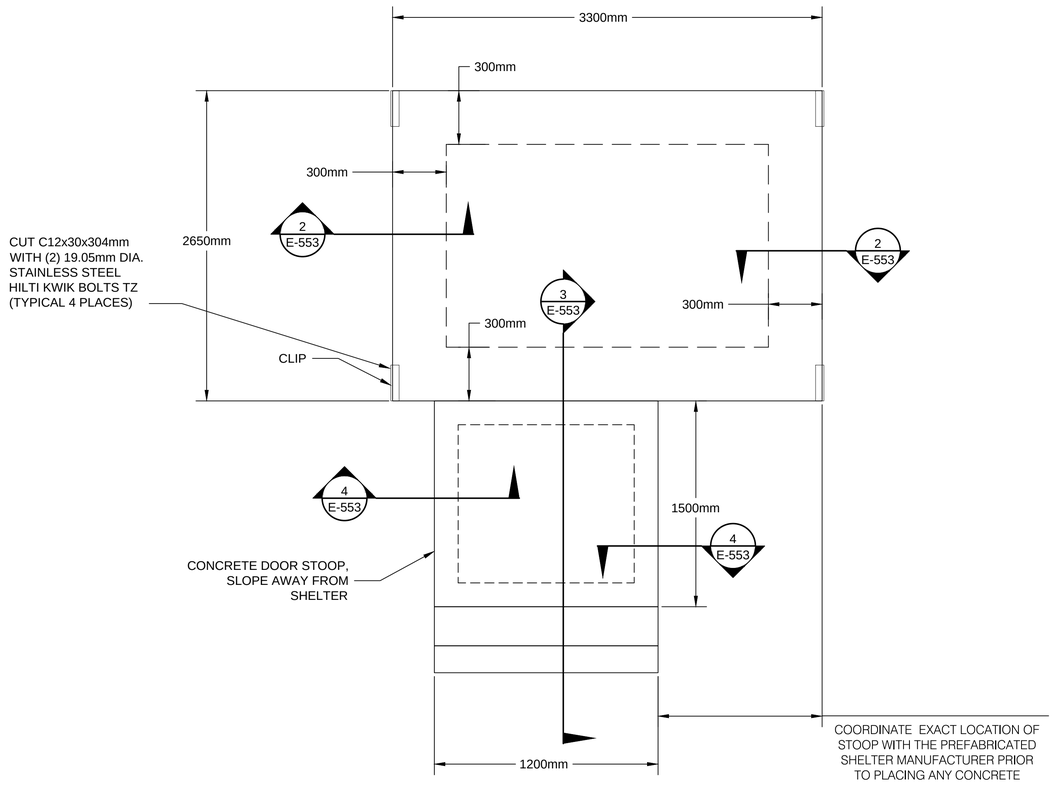

1 DTL SHELTER FOUNDATION PLAN
SCALE: NOT TO SCALE

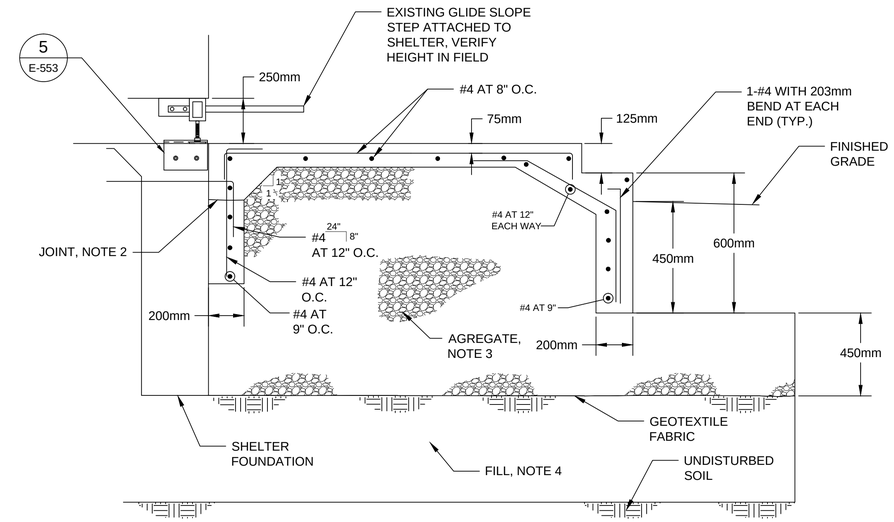

3 E-553 DOOR STOOP SECTION
SCALE: NOT TO SCALE

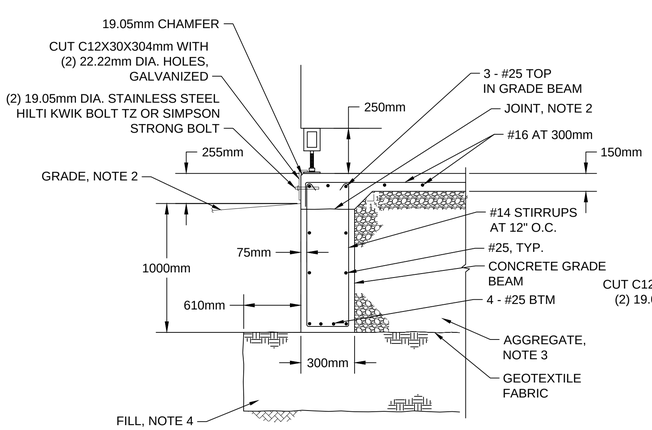

2 E-553 SECTION - FOUNDATION SECTION
SCALE: NOT TO SCALE

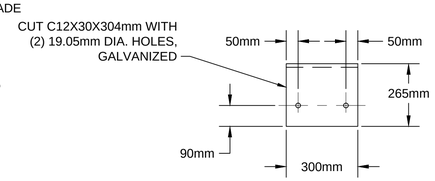

5 E-553 DETAIL - CLIP
SCALE: NOT TO SCALE

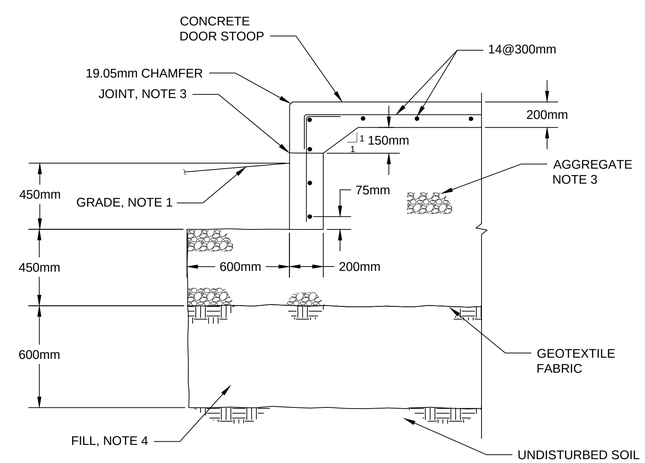

4 E-553 SECTION - DOOR STOOP TURNED DOWN SLAB
SCALE: NOT TO SCALE

NOTES:

1. SLOPE FINISHED GRADE DOWNWARD AWAY FROM FOUNDATION FOR A MINIMUM OF 1.82M.
2. OPTIONAL CONSTRUCTION JOINT ROUGHENED TO 6.35mm AMPLITUDE.
3. CRUSHED AGGREGATE COMPACTED TO 95% OF MAXIMUM DRY DENSITY AND ± 2 POINTS OF THE OPTIMUM MOISTURE CONTENT PER ASTM D1557.
4. APPROVED ENGINEERED FILL COMPACTED TO 95% OF MAXIMUM DRY DENSITY AND ± 2 POINTS OF THE OPTIMUM MOISTURE CONTENT PER ASTM D1557.

US Army Corps of Engineers®

MARK	DESCRIPTION	DATE

DESIGNED BY: K. THOMAS
DRAWN BY: D. BAUMGARDNER
CHECKED BY: D. HUGHES
SUBMITTED BY: D. OFFERIL
SIZE: ANSI D
ISSUE DATE: MARCH 2017
SOLICITATION NO.:
CONTRACT NO.: PAYZ15002A

U.S. ARMY CORPS OF ENGINEERS
KONRAD ADENAUER RING 39
WIESBADEN, D-65187 / GERMANY

AECOM INTERNATIONAL, INC.
SIEMENSSTRASE 10
NEU-ISENBURG, 63263

ERI: IMPROVE SUPPORT INFRASTRUCTURE
ŁASK AB, POLAND

GLIDE SLOPE DETAILS - 4
RUNWAY 28

SHEET ID
E-553

C:\PWWORKING\AECOM_EU\DBAUMGARDNER_TM\D0159839\15-D-0008-0003EEA505.DWG
5/12/2016 DAVID.BAUMGARDNER

100%

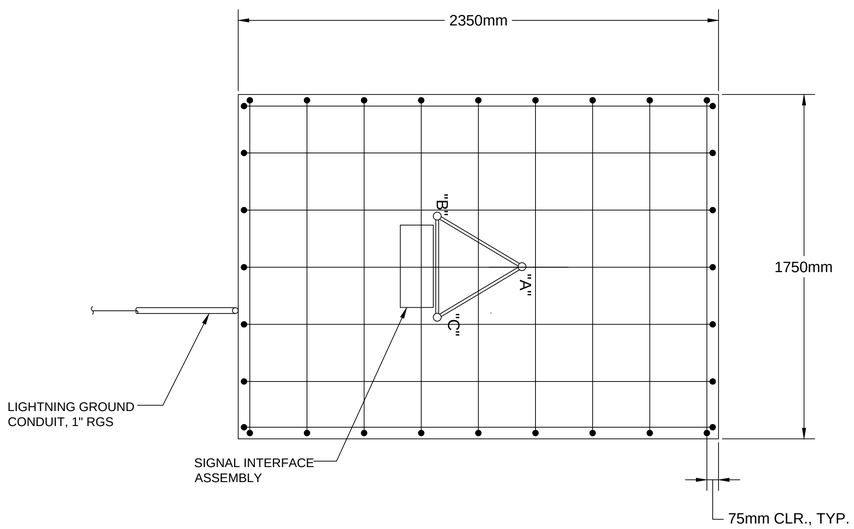

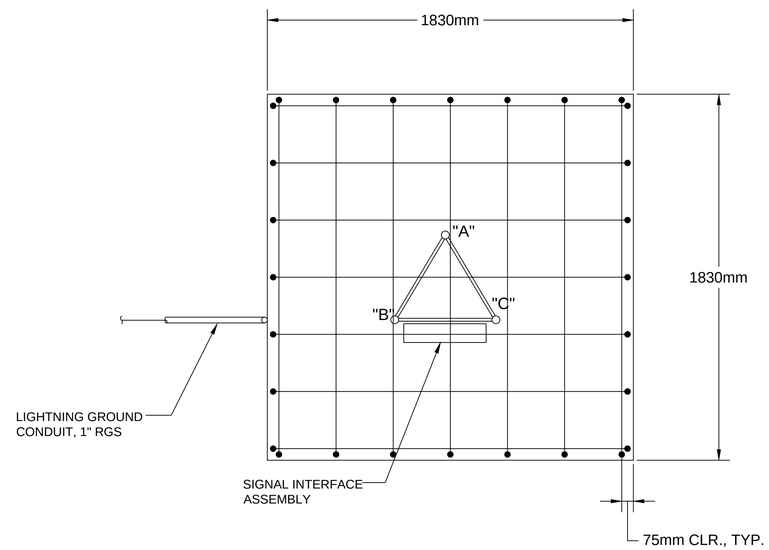

GENERAL NOTES:

1. ALL WORK DONE BY THE CONTRACTOR SHALL BE SUPERVISED BY AN APPROVED DME/SELEX TECHNICIAN.
2. THE CONTRACTOR SHALL LEAVE EXPOSED ALL GROUND ROD CONNECTIONS FOR ENGINEER INSPECTOR PRIOR TO RESTORING SITE TO GRADE.
3. THE CONTRACTOR SHALL PROVIDE A PULL ROPE FOR ALL CONDUITS EITHER USED FOR DME/SELEX TECHNICIAN OR FOR SPARES. INSTALL PUSH-IN PLUG WITH PULL TAB AT SPARE CONDUIT ENDS.
4. COORDINATE WITH DME AND FFM MANUFACTURER FOR FOUNDATION AND EXACT ORIENTATION OF TOWER. SEE MANUFACTURES DME AND FFM INSTALLATION DRAWINGS ON SHEET E-561 AND E-562.

NOTES:

1. CONCRETE FOR FOOTINGS SHALL HAVE COMPRESSIVE STRENGTH OF 30 MPA AT 28 DAYS AND SHALL HAVE 15mm CHAMFER ON ALL EDGES. FOOTINGS SHALL NOT EXCEED 75mm FOR DME FOUNDATION, 150mm FOR FFM FOUNDATION, ABOVE FINISHED GRADE
2. ALL REINFORCING SHALL CONFORM TO ASTM A615, GRADE 60.
3. FOOTINGS ARE DESIGNED FOR 100 MPH WIND LOAD.
4. FOR ANCHOR BOLTS AND BASE PLATE DETAILS, SEE TOWER MANUFACTURER'S DATA SHEETS.
5. COORDINATE WITH DME AND FFM TECHNICIAN FOR CONDUIT LAYOUT AND STUBS.
6. PROVIDE 75mm MIN. CONCRETE COVER OVER REINFORCING BARS
7. PROVIDE MAINTENANCE PAD, 100mm THICK STONE ON SEPARATION GEOTEXTILE FABRIC. PAD SHALL BE RECTANGULAR IN SHAPE AND 1220mm MINIMUM FROM DME EQUIPMENT
8. FOR UNDERGROUND CONDUIT AND GROUNDING, SEE SHEET E-403 THRU E-406

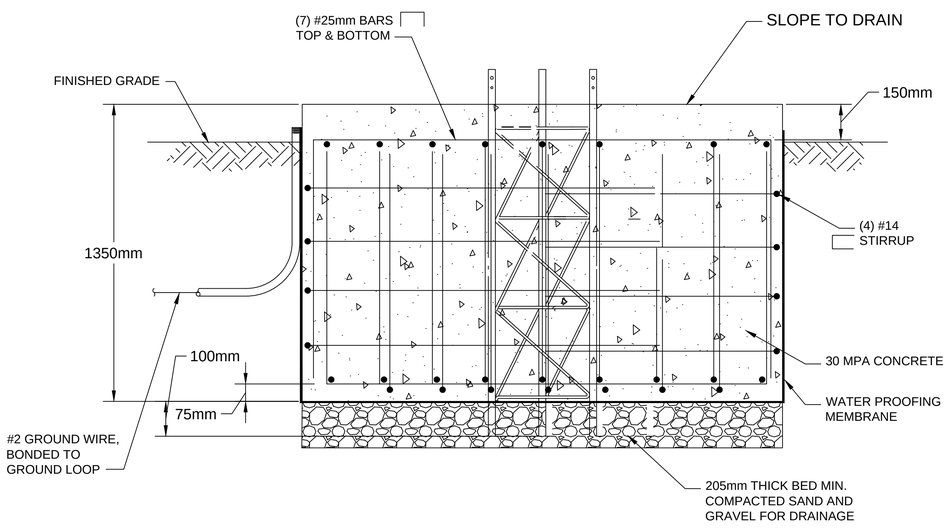

1 E-554 DETAIL - FFM TOWER FOUNDATION
NOT TO SCALE

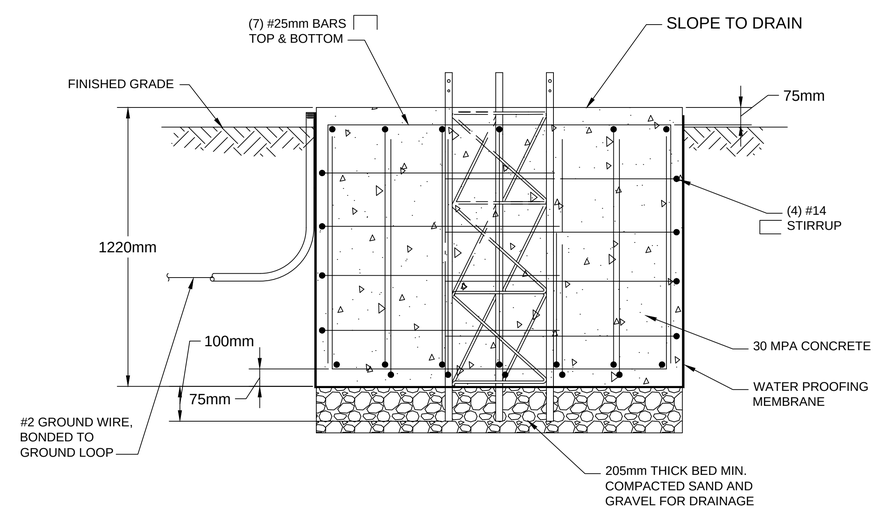

2 E-554 DETAIL - DME TOWER FOUNDATION
NOT TO SCALE

US Army Corps of Engineers®

MARK	DESCRIPTION	DATE

DESIGNED BY: K. THOMAS
DRAWN BY: D. BAUMGARDNER
CHECKED BY: D. HUGHES
SUBMITTED BY: D. DIEHL
SIZE: ANSI D
ISSUE DATE: MARCH 2017
SOLICITATION NO.:
CONTRACT NO.: PAY215002A

U.S. ARMY CORPS OF ENGINEERS
KONRAD ADENAUER RING 39
WIESBADEN, D-65187 / GERMANY

AECOM INTERNATIONAL, INC.
SIEMENSSTRAßE 10
NEU-ISENBURG, 63263

ERI: IMPROVE SUPPORT INFRASTRUCTURE
LASK AB, POLAND

FAR FIELD MONITOR AND
DME TOWER FOUNDATION DETAIL -
RUNWAY 28

SHEET ID
E-554

C:\PWWORKING\AECOM_EU\DBAUMGARDNER_TM\D0159839\15-D-0008-0003EEA505.DWG
5/12/2016 DAVID.BAUMGARDNER 1:500

100%

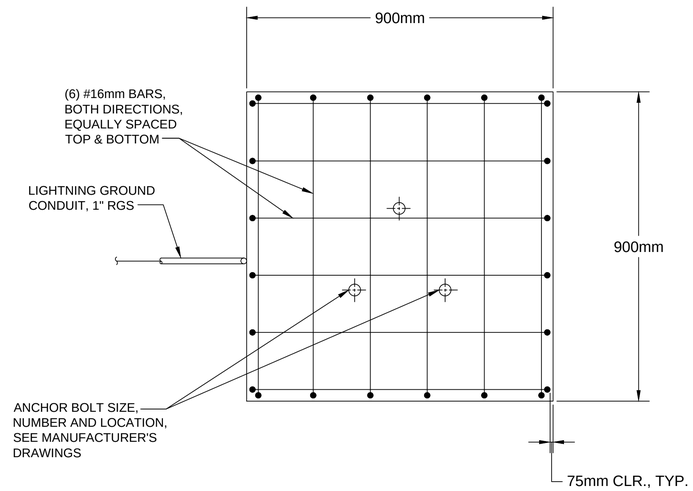

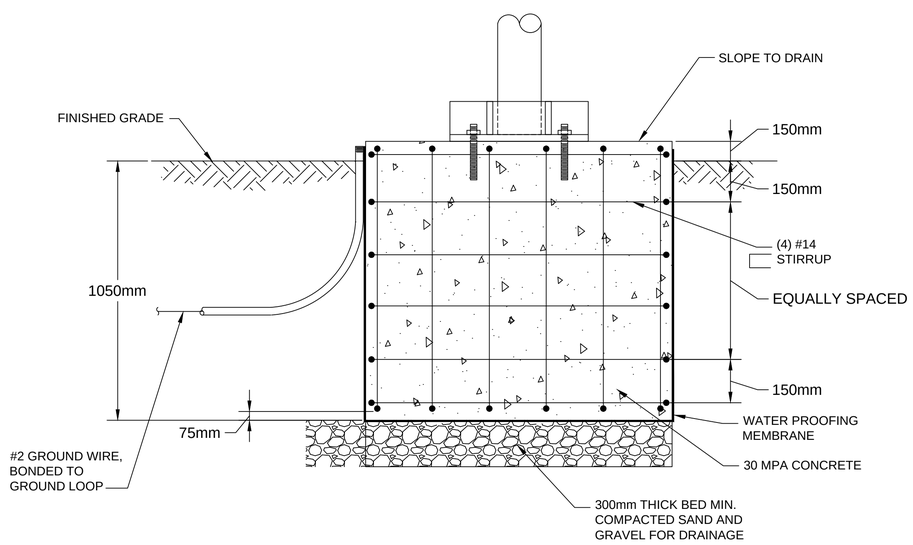

1 / E-555 DETAIL - NEAR FIELD MONITOR TOWER FOUNDATION
NOT TO SCALE

GENERAL NOTES:

1. ALL WORK DONE BY THE CONTRACTOR SHALL BE SUPERVISED BY AN APPROVED NEAR FIELD MONITOR/SELEX TECHNICIAN.
2. THE CONTRACTOR SHALL LEAVE EXPOSED ALL GROUND ROD CONNECTIONS FOR ENGINEER INSPECTOR PRIOR TO RESTORING SITE TO GRADE.
3. THE CONTRACTOR SHALL PROVIDE A PULL ROPE FOR ALL CONDUITS EITHER USED FOR NEAR FIELD MONITOR/SELEX TECHNICIAN OR FOR SPARES. INSTALL PUSH-IN PLUG WITH PULL TAB AT SPARE CONDUIT ENDS.
4. COORDINATE WITH NEAR FIELD MONITOR MANUFACTURER FOR FOUNDATION AND EXACT ORIENTATION OF TOWER. SEE MANUFACTURES NEAR FIELD MONITOR INSTALLATION DRAWINGS ON SHEET E-567.

NOTES:

1. CONCRETE FOR FOOTINGS SHALL HAVE COMPRESSIVE STRENGTH OF 30 MPA AT 28 DAYS AND SHALL HAVE 15mm CHAMFER ON ALL EDGES. FOOTINGS SHALL NOT EXCEED 150mm FOR NEAR FIELD FOUNDATION, ABOVE FINISHED GRADE
2. ALL REINFORCING SHALL CONFORM TO ASTM A615, GRADE 60.
3. FOOTINGS ARE DESIGNED FOR 100 MPH WIND LOAD.
4. FOR ANCHOR BOLTS AND BASE PLATE DETAILS, SEE TOWER MANUFACTURER'S DATA SHEETS.
5. COORDINATE WITH NEAR FIELD MONITOR TECHNICIAN FOR CONDUIT LAYOUT AND STUBS.
6. PROVIDE 75mm MIN. CONCRETE COVER OVER REINFORCING BARS
7. PROVIDE MAINTENANCE PAD, 100mm THICK STONE ON SEPARATION GEOTEXTILE FABRIC. PAD SHALL BE RECTANGULAR IN SHAPE AND 1220mm MINIMUM FROM NEAR FIELD MONITOR EQUIPMENT
8. FOR UNDERGROUND CONDUIT AND GROUNDING, SEE SHEET E-403 THRU E-406

US Army Corps of Engineers®

MARK	DESCRIPTION	DATE

DESIGNED BY: K. THOMAS
DRAWN BY: D. BAUMGARDNER
CHECKED BY: D. HUGHES
SUBMITTED BY: D. DIEHL
SIZE: ANSI D
ISSUE DATE: MARCH 2017
SOLICITATION NO.:
CONTRACT NO.: PAYZ15002A

U.S. ARMY CORPS OF ENGINEERS
KONRAD ADENAUER RING 39
WIESBADEN, D-65187 / GERMANY

AECOM INTERNATIONAL, INC.
SIEMENSSTRASE 10
NEU-ISENBURG, 63263

ERI: IMPROVE SUPPORT INFRASTRUCTURE
ŁASK AB, POLAND

NEAR FIELD MONITOR
TOWER FOUNDATION DETAIL -
RUNWAY 28

SHEET ID
E-555

C:\PWWORKING\AECOM_EU\DBAUMGARDNER_TM\D0159839\15-D-0008-0003EEA505.DWG
5/12/2016 DAVID.BAUMGARDNER 1:500

100%

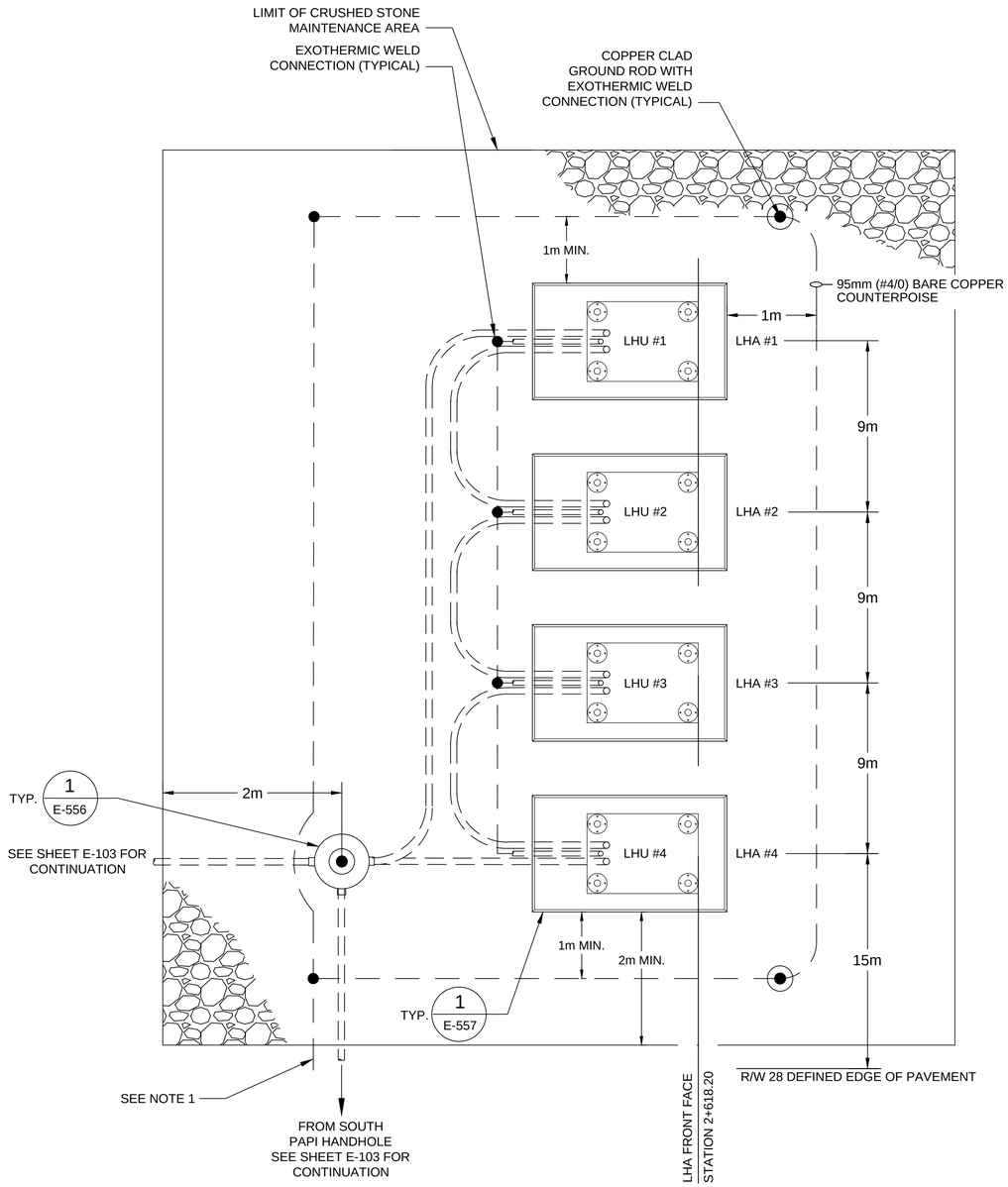

1 E-555 LAMP HOUSING ASSEMBLY
CONDUIT CONFIGURATION PLAN - R/W 28 NORTH
NOT TO SCALE

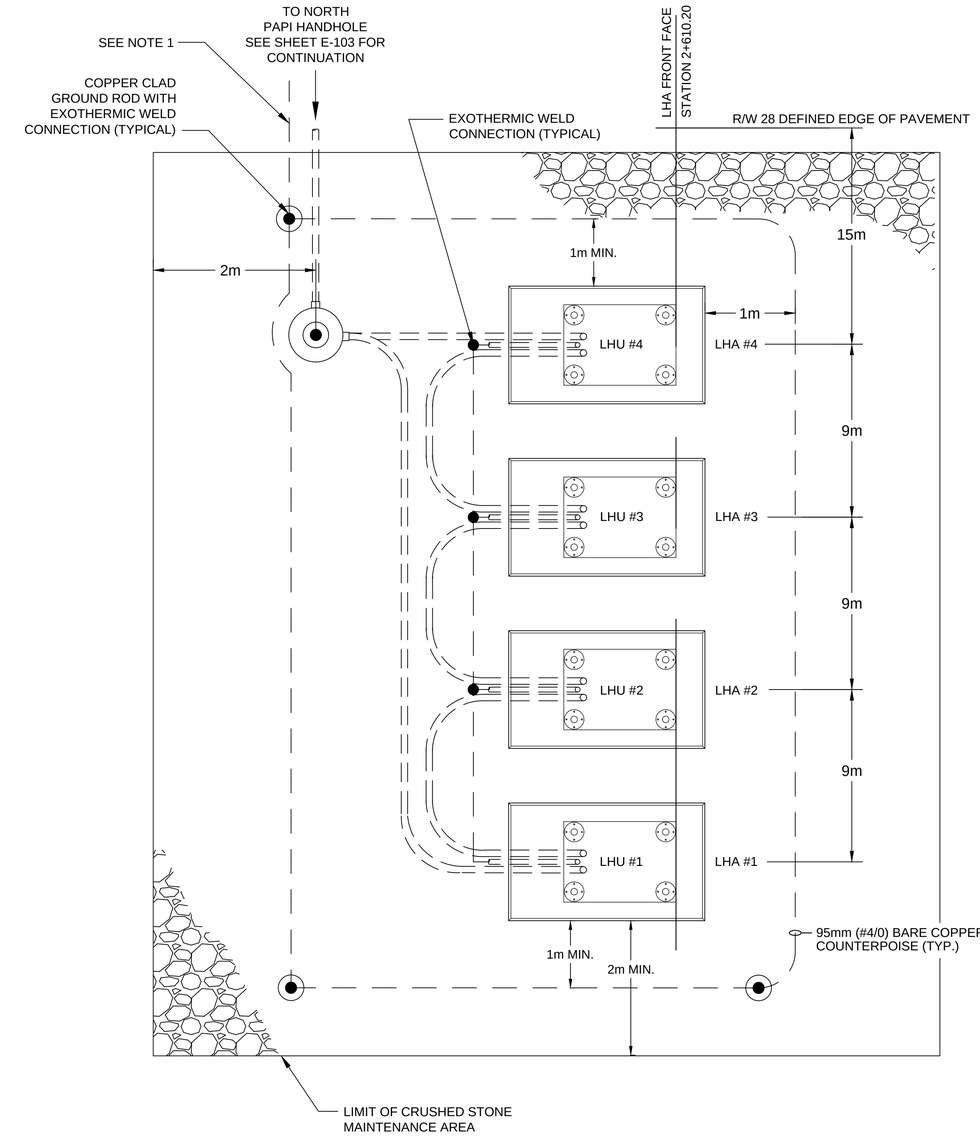

2 E-555 LAMP HOUSING ASSEMBLY
CONDUIT CONFIGURATION PLAN - R/W 28 SOUTH
NOT TO SCALE

NOTES:

1. PROVIDE #4 AWG BARE COUNTERPOISE, STRANDED COPPER OVER CONDUITS. EXOTHERMICALLY WELD COUNTERPOISE TO GROUND RODS EVERY 300m (MAX.). DO NOT CONNECT COUNTERPOISE TO JUNCTION CANS OR LIGHT BASES.
2. INSTALL A #6 COPPER AWG GREEN-JACKETED WIRE IDENTIFIED AS EQUIPMENT GROUND IN DUCTS CONTAINING PRIMARY CIRCUITS AND CONNECT TO INSIDE LUG OF LIGHT BASE.
3. PROVIDE #6 BARE COPPER GROUND WIRE FROM PAPI FLANGE BOLT TO GROUND ROD.
4. REFER TO SHEET E-103 FOR PAPI LOCATIONS.

US Army Corps of Engineers®

MARK	DESCRIPTION	DATE

DESIGNED BY: K. THOMAS
DRAWN BY: D. BAUMGARDNER
CHECKED BY: D. HUGHES
SUBMITTED BY: D. DIEHL
SIZE: ANSI D
ISSUE DATE: MARCH 2017
SOLICITATION NO.:
CONTRACT NO.: PAYZ15002A

U.S. ARMY CORPS OF ENGINEERS
KONRAD ADENAUER RING 39
WIESBADEN, D-65187 / GERMANY

AECOM INTERNATIONAL, INC.
SIEMENSSTRAßE 10
NEU-ISENBURG, 63263

ERI: IMPROVE SUPPORT INFRASTRUCTURE
ŁASK AB, POLAND

PAPI LAMP HOUSING ASSEMBLY - CONDUIT CONFIGURATION

SHEET ID
E-556

100%

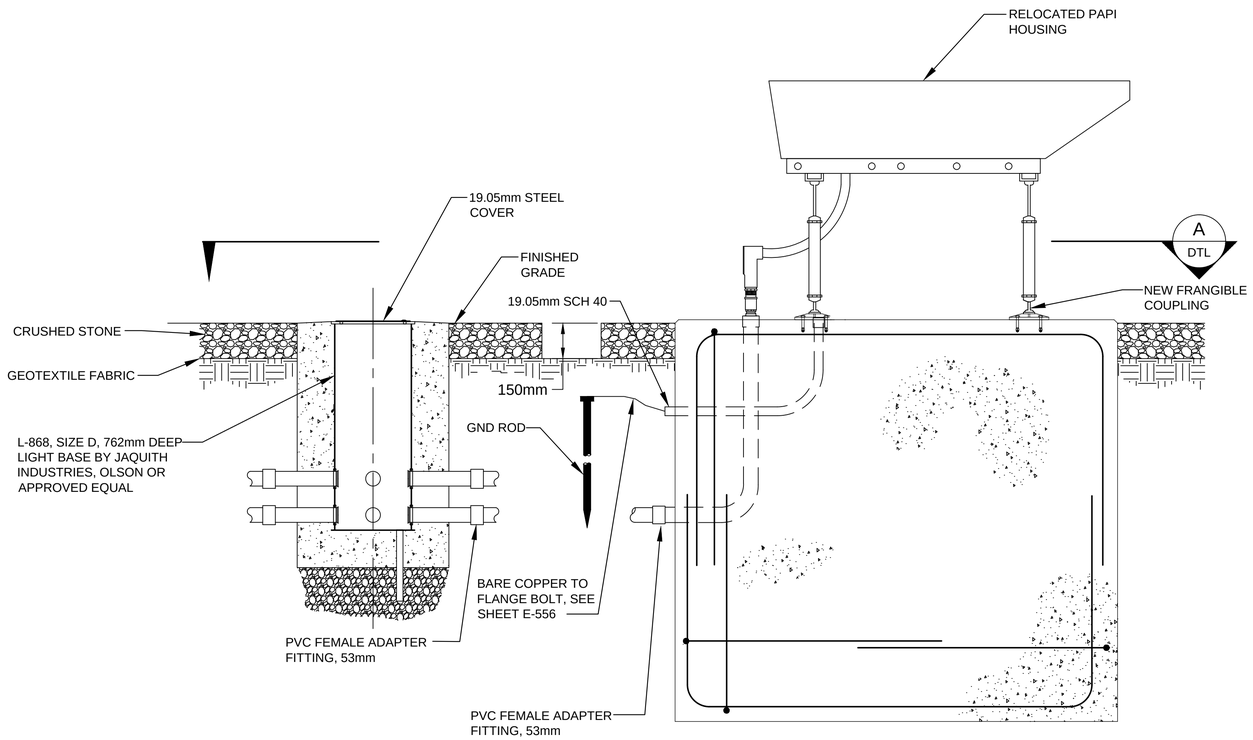

1 / E-556 DETAIL - PAPI LAMP HOUSING ASSEMBLY - LAYOUT PLAN
NOT TO SCALE

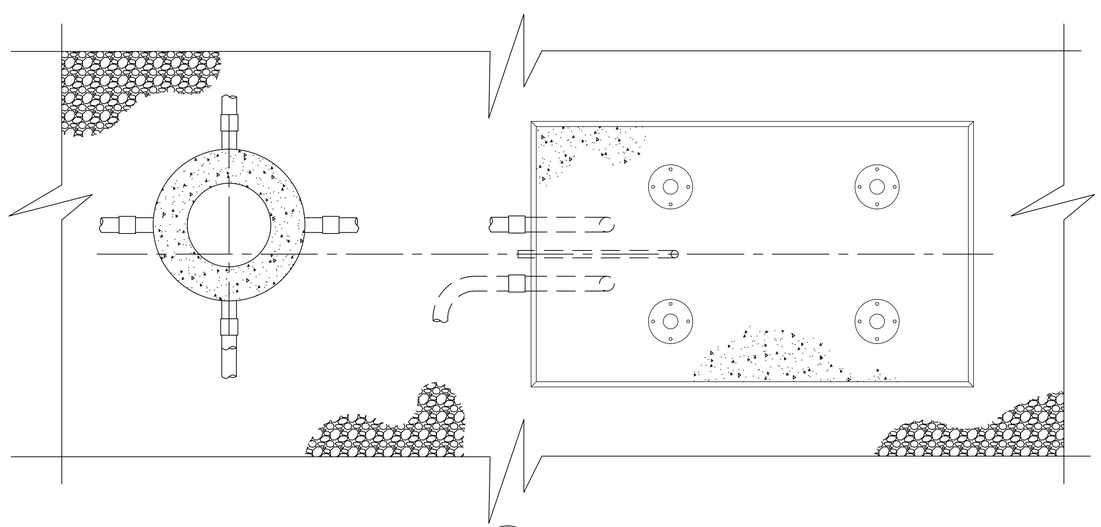

A / DTL SECTION - PAPI - A
NOT TO SCALE

PAPI NOTES:

1. PROVIDE FRANGIBLE MOUNTS FOR ALL LEGS OF LAMP HOUSING UNITS.
2. GROUND EACH LAMP HOUSING. MAKE NECESSARY CONNECTION TO GROUND ROD.
3. CONCRETE SHALL BE NORMAL WEIGHT HAVING COMPRESSIVE STRENGTH OF 30 MPA AT 28 DAYS.
4. APPLY "NEVER SEIZE" OR APPROVED EQUAL TO ALL THREADED BOLTS AND CONNECTIONS.
5. AZIMUTHAL AIMING. EACH LIGHT UNIT SHALL BE AIMED OUTWARD INTO APPROACH ZONE ON A LINE PARALLEL TO THE RUNWAY CENTERLINE WITHIN A TOLERANCE OF + 1/2 DEGREE.
6. MOUNTING HEIGHT TOLERANCES. THE BEAM CENTERS OF ALL LIGHT UNITS SHALL BE WITHIN 25.4mm OF A HORIZONTAL PLANE. THE HORIZONTAL PLANE SHALL BE WITHIN +/- 304mm OF THE ELEVATION OF THE RUNWAY CENTERLINE AT THE INTERCEPT POINT OF THE VISUAL GLIDE PATH WITH THE RUNWAY.
7. TOLERANCE ALONG LINE PERPENDICULAR TO RUNWAY. THE FRONT FACE OF EACH LIGHT UNIT IN A BAR SHALL BE LOCATED ON A LINE PERPENDICULAR TO THE RUNWAY CENTERLINE WITHIN (+/-) 152mm.
8. CONTRACTOR SHALL SURVEY AND VERIFY ALL ELEVATIONS AND LOCATIONS PRIOR TO INSTALLATION

GENERAL NOTES:

1. ARRANGEMENT SHOWN IS FOR R/W 28 PAPI.
2. EQUIPMENT PAD AND APRONS SHALL HAVE CHAMFER ALL AROUND.
3. T.O.C. FOR EQUIPMENT PAD AND APRONS SHALL BE NOT MORE THAN 38mm ABOVE FINISHED GRADE.
4. CONDUIT FROM L-868 JUNCTION BOX TO 609mm BEYOND FOUNDATION SHALL BE RGS CONDUIT.
5. TRANSITION FROM RGS TO SCHEDULE 40 PVC CONDUIT WITH FEMALE ADAPTER CONDUIT FITTING.
6. FEEDER FOR R/W 28 PAPI SHALL EACH BE AS NOTED IN PLANS.
7. ATTACH EQUIPMENT GROUND CONDUCTOR TO GROUND LUG WITH EXOTHERMIC WELD. HOLE THROUGH LUG SHALL BE SIZED TO ACCEPT EQUIPMENT ANCHOR BOLT. INSERT LUG BETWEEN EQUIPMENT MOUNTING FLANGE AND ANCHOR BOLT NUT.

PAPI LAMP HOUSING ASSEMBLY AIMING

DESCRIPTION	RUNWAY 28 SOUTH
THRESHOLD ELEVATION	192.37m
STATION @ RRP	2+610.20
RUNWAY C/L ELEVATION AT RRP	192.21m
APERTURE ELEVATION, SECONDARY LHA UNIT #2	0.78m AGL
APERTURE ELEVATION, SECONDARY LHA UNIT #1	0.42m AGL
AIMING ANGLE, LHA UNIT #4	3°30'00"
AIMING ANGLE, LHA UNIT #3	3°10'00"
AIMING ANGLE, LHA UNIT #2	2°50'00"
AIMING ANGLE, LHA UNIT #1	2°30'00"

* FROM CORRESPONDING RUNWAY THRESHOLD

PAPI LAMP HOUSING ASSEMBLY AIMING

DESCRIPTION	RUNWAY 28 NORTH
THRESHOLD ELEVATION	192.37m
STATION @ RRP	2+618.20
RUNWAY C/L ELEVATION AT RRP	192.18m
APERTURE ELEVATION, SECONDARY LHA UNIT #2	0.30m AGL
APERTURE ELEVATION, SECONDARY LHA UNIT #1	0.30m AGL
AIMING ANGLE, LHA UNIT #4	3°30'00"
AIMING ANGLE, LHA UNIT #3	3°10'00"
AIMING ANGLE, LHA UNIT #2	2°50'00"
AIMING ANGLE, LHA UNIT #1	2°30'00"

* FROM CORRESPONDING RUNWAY THRESHOLD

US Army Corps of Engineers®

MARK	DESCRIPTION	DATE

DESIGNED BY: K. THOMAS
DRAWN BY: D. BAUMGARDNER
CHECKED BY: D. HUGHES
SUBMITTED BY: D. DIEHL
SIZE: ANSI D
ISSUE DATE: MARCH 2017
SOLICITATION NO.:
CONTRACT NO.: PAYZ15002A

U.S. ARMY CORPS OF ENGINEERS
KONRAD ADENAUER RING 39
WIESBADEN, D-65187 / GERMANY

AECOM INTERNATIONAL, INC.
SIEMENSSTRASE 10
NEU-ISENBURG, 63263

ERI: IMPROVE SUPPORT INFRASTRUCTURE
ŁASK AB, POLAND

PAPI LAMP HOUSING ASSEMBLY - LAYOUT PLAN

SHEET ID
E-557

C:\PWWORKING\AECOM_EU\DBAUMGARDNER_TM\D0159839\15-D-0008-0003EEA505.DWG
5/12/2016 DAVID.BAUMGARDNER 1:500

100%

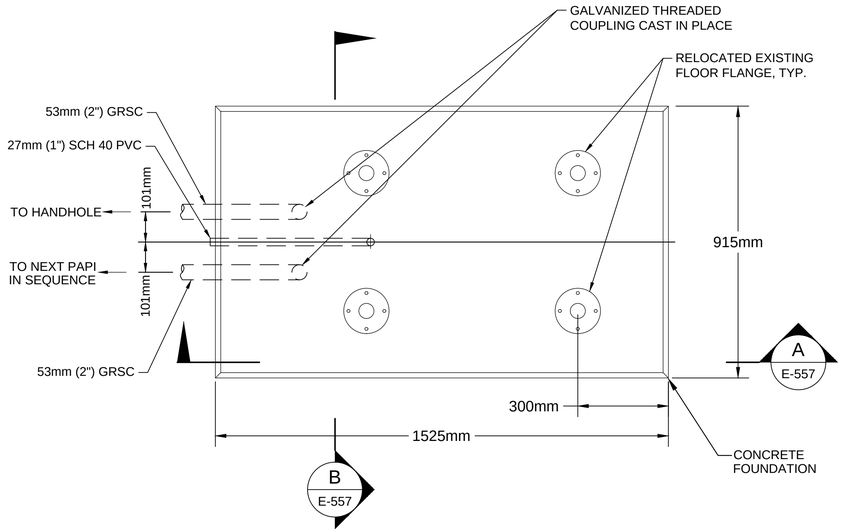

1 E-557 PAPI LAMP HOUSING ASSEMBLY FOUNDATION PLAN
NOT TO SCALE

NOTES:

1. CONCRETE SHALL DEVELOP A MINIMUM COMPRESSIVE STRENGTH OF 30 MPA IN 28 DAYS WITH A MAXIMUM SLUMP OF 78mm (3") AND A MAXIMUM AGGREGATE SIZE OF 20MM.
2. REINFORCEMENT STEEL SHALL COMPLY WITH ASTM A615 GRADE 60.
3. FOUNDATION SURFACE SHALL BE LEVEL WITH A TOLERANCE OF +/- 3mm.
4. ANTI-SEIZE COMPOUND SHALL BE APPLIED TO ALL THREADS ON BOLTS AND FRANGIBLE COUPLINGS.
5. APPLY WATERPROOFING MEMBRANE - ALL SIDES OF FOOTING

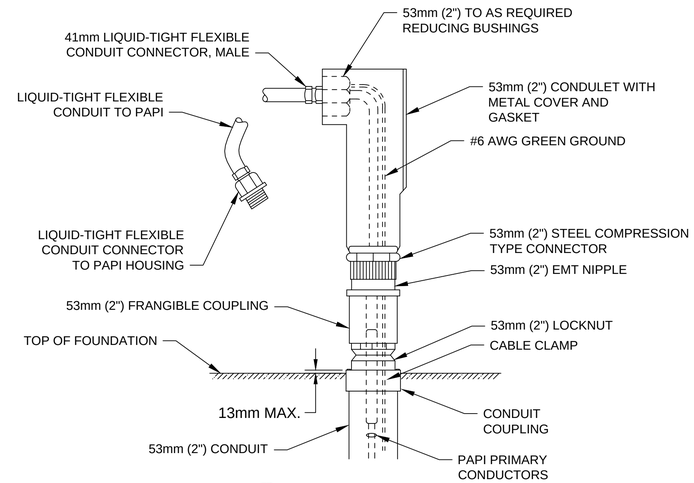

2 E-557 DETAIL - LB FITTING
NOT TO SCALE

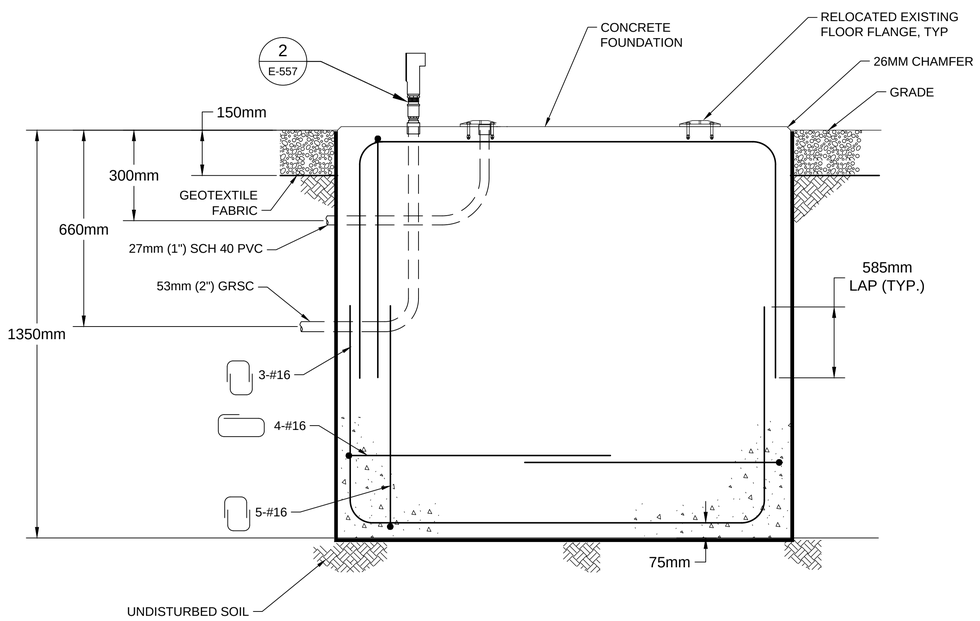

A E-557 SECTION
NOT TO SCALE

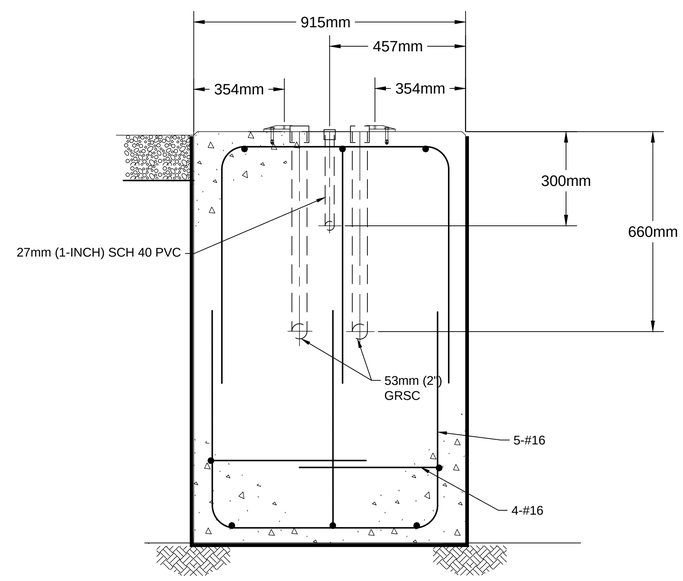

B E-557 SECTION
NOT TO SCALE

US Army Corps of Engineers®

MARK	DESCRIPTION	DATE

DESIGNED BY: K. THOMAS
DRAWN BY: D. BAUMGARDNER
CHECKED BY: D. HUGHES
SUBMITTED BY: D. DIEHL
SIZE: ANSI D
ISSUE DATE: MARCH 2017
SOLICITATION NO.:
CONTRACT NO.: PAYZ15002A

U.S. ARMY CORPS OF ENGINEERS
KONRAD ADENAUER RING 39
WIESBADEN, D-65187 / GERMANY

AECOM INTERNATIONAL, INC.
SIEMENSSTRAßE 10
NEU-ISENBURG, 63263

ERI: IMPROVE SUPPORT INFRASTRUCTURE
LASK AB, POLAND

PAPI LAMP HOUSING ASSEMBLY - FOUNDATION PLAN

SHEET ID
E-558

C:\PWWORKING\AECOM_EU\DBAUMGARDNER_TM\D0159839\15-D-0008-0003EEA505.DWG
5/12/2016 DAVID.BAUMGARDNER 1:500

100%

THIS DOCUMENT CONTAINS PROPRIETARY INFORMATION AND SUCH INFORMATION MAY NOT BE DISCLOSED TO OTHERS FOR ANY PURPOSE NOR FOR MANUFACTURING PURPOSES WITHOUT WRITTEN PERMISSION FROM Selex ES

DWG NO. 470085 SH 1 REV AN

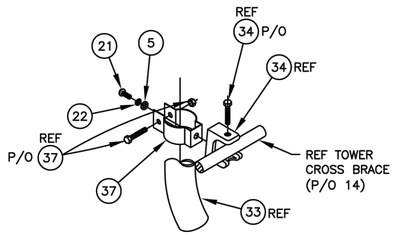

DETAIL B

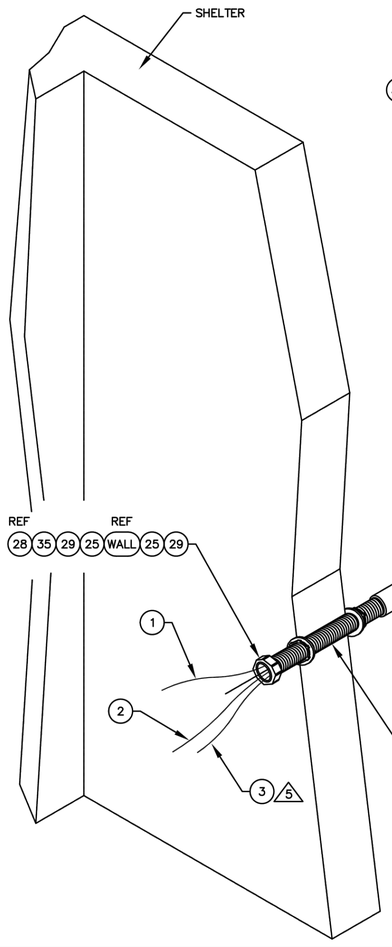

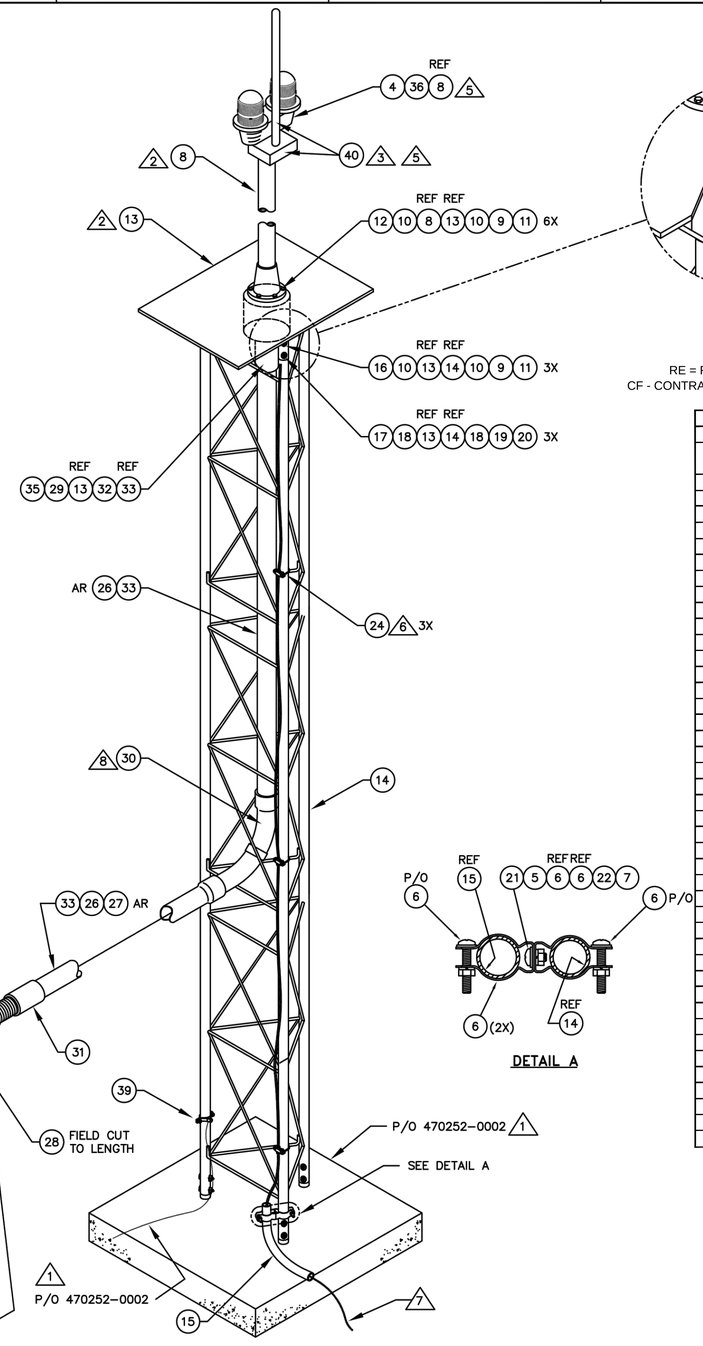

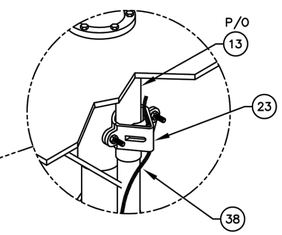

DETAIL A

RE = RELOCATED
CF - CONTRACTOR FURNISHED

SEE SHEET 2 FOR NOTES.

FIND NO.	-0018	-0016	-0014	-0012	-0010	-0008	-0006	-0004	-0002	CAGE	PART NO.	DESCRIPTION
	QTY REQD											
RE	40	–	–	–	1	1	1	1	1	1		950639–0000	LIGHTNING ROD, W/BRACKET AND NIPPLE
CF	39	1	1	1	1	1	1	1	1	1		347122–0001	CLAMP, GROUND
CF	38	15FT 4.57M	15FT 4.57M	15FT 4.57M	15FT 4.57M	15FT 4.57M	15FT 4.57M	15FT 4.57M	15FT 4.57M	15FT 4.57M		146029–0001	WIRE, 17 AWG, STRANDED COPPER WIRE
CF	37	1	1	1	1	1	1	1	1	1		347067–0007	PIPE HANGER, 2"
RE	36	–	–	–	1	1	1	1	1	1		347510–0004	REDUCER, 1"–3/4"
RE	35	2	2	2	2	2	2	2	2	2		347128–0006	SLEEVE BUSHING, 2", PVC
CF	34	1	1	1	1	1	1	1	1	1		347070–0000	BEAM CLAMP, 1"
CF	33	1	1	1	1	1	1	1	1	1		900130–0600	RIGID CONDUIT, 2" X 10', PVC
CF	32	1	1	1	1	1	1	1	1	1		347083–0006	CONDUIT ADAPTER, 2", PVC
CF	31	1	1	1	1	1	1	1	1	1		321067–0000	CONDUIT ADAPTER, 2", FEMALE
CF	30	1	1	1	1	1	1	1	1	1		321075–0000	CONDUIT ELBOW, 2", 90°, PVC
CF	29	3	3	3	3	3	3	3	3	3		347107–0007	LOCKNUT, ELECTRICAL CONDUIT, 2"
CF	28	1	1	1	1	1	1	1	1	1		950290–0002	CONDUIT, RUNNING THREAD, 2" X 10"
CF	27	1	1	1	1	1	1	1	1	1		347082–0006	CONDUIT COUPLING, 2", PVC
CF	26	1	1	1	1	1	1	1	1	1		900088–0000	PVC ADHESIVE, QUICK SET
CF	25	2	2	2	2	2	2	2	2	2		321058–0000	SHOULDER WASHER, REDUCING
CF	24	3	3	3	3	3	3	3	3	3		347118–0002	CLAMP, GROUND
CF	23	1	1	1	1	1	1	1	1	1		347122–0002	CLAMP, GROUND
CF	22	2	2	2	2	2	2	2	2	2		136504–0139	LOCK WASHER, 1/4", SPRING HELICAL
CF	21	2	2	2	2	2	2	2	2	2		136000–0079	MACHINE SCREW, 1/4–20 X 1/2"
CF	20	3	3	3	3	3	3	3	3	3		327069–0000	HEX NUT, 5/16–18
CF	19	3	3	3	3	3	3	3	3	3		327065–0000	LOCK WASHER, 5/16"
CF	18	6	6	6	6	6	6	6	6	6		137000–0812	FLAT WASHER, SS
CF	17	3	3	3	3	3	3	3	3	3		327027–0014	MACHINE BOLT, 5/16–18 X 2 1/2"
CF	16	3	3	3	3	3	3	3	3	3		136027–0368	MACHINE BOLT, 3/8–16 X 2 1/2"
CF	15	1	1	1	1	1	1	1	1	1		347081–1002	CONDUIT, 90° X 3/4"
RE	14	1	1	1	1	1	1	1	1	1		950293–0000	TOWER, ROHN, 10 FT [3.04M] SECTION
RE	13	1	1	1	1	1	1	1	1	1		950006–0000	ADAPTER PLATE
CF	12	6	6	6	6	6	6	6	6	6		136027–0366	MACHINE BOLT, 3/8–16 X 2"
CF	11	9	9	9	9	9	9	9	9	9		321014–0000	HEX NUT, 3/8–16
CF	10	18	18	18	18	18	18	18	18	18		137000–0814	FLAT WASHER, 3/8
CF	9	9	9	9	9	9	9	9	9	9		136504–0141	LOCK WASHER, 3/8", SPRING HELICAL
RE	8	1	–	–	1	1	–	–	–	–		950601–0000	ANTENNA – dB SYSTEMS 510A–D
RE	8	–	1	–	–	–	1	1	–	–		950561–0000	ANTENNA – dB SYSTEMS 5100A
RE	8	–	–	1	–	–	–	–	1	1		950005–0001	ANTENNA – dB SYSTEMS 510A
CF	7	1	1	1	1	1	1	1	1	1		137500–2254	HEX NUT, 1/4–20
CF	6	2	2	2	2	2	2	2	2	2		347556–0002	CLAMP, CONDUIT HANGER, 1" SS W/HARDWARE
CF	5	2	2	2	2	2	2	2	2	2		137000–0810	FLAT WASHER, 1/4–20
RE	4	–	–	–	1	–	1	–	1	–		030338–0004	OBSTRUCTION LAMP ASSEMBLY, 230 V
RE	4	–	–	–	–	1	–	1	–	1		030338–0003	OBSTRUCTION LAMP ASSEMBLY, 115 V
CF	3	–	–	–	1	1	1	1	1	1		070219–0001	CABLE ASSEMBLY, AC POWER CORD
CF	2	1	1	1	1	1	1	1	1	1		070476–0001	CABLE ASSEMBLY, MONITOR ANTENNA
CF	1	1	1	1	1	1	1	1	1	1		070217–0001	CABLE ASSEMBLY, RF, 35'
CF	–	2	2	2	2	2	2	2	2	2		470085–8001	DRAWING, DME ANTENNA KIT
	A											470085–00XX	KIT, DME ANTENNA

PARTS LIST

REVISIONS			
REV	DESCRIPTION	DATE	APPROVED
–	RELEASED PER ERN DC00105	94/1/14	BRASE
P	REV P/L, CHG DWG REV TO MATCH P/L REV PER ECO 1118–918	95/11/22	BRASE
R	ADD –0006 & –0008 PER ECO 1118–943	95/12/6	BRASE
T	REVISE P/L PER ECO 1118–965	96/10/21	BRASE
U	REVISED PER ECO 1118–1000	96/10/21	BRASE
W	REVISED PER ECO 1119–211	11/25/97	L.Wilson
Y	REVISED PER ECO 1118–1163	11/25/97	L.Wilson
AA	REVISED PER ECO 1118–1169	11/25/97	L.Wilson
AB	REVISED PER ECO 1118–1283	2/06/02	ROTHWELL
AC	REVISED PER ECO 1118–1335	2/06/02	ROTHWELL
AD	CHANGE F/N 33 PER ECO 1118–1461	04/21/02	J Anderson
AE	ADD SHT 2 PER ECO 1118–1468	04/21/02	J Anderson
AF	REVISED PER ECO 1118–1511	6/23/03	FALKE
AG	REVISED PER ECO 1118–1540	3/22/04	HUANG
AH	REVISED PER ECO 1118–1545	5/26/04	T WILLIAMS
AJ	ADD 470085–0009, 0011 & 0018 PER ECO 0797	03/14/06	S.Hotchkiss
AK	ADD LIGHTNING PROTECTION PER ECO 1586	04/10/07	S.Hotchkiss
AL	CORRECT WIRE P/N (ITEM 38) PER ECO 3572	05/19/10	S.Hotchkiss
AM	CREATE –0013 PER ECO 5290	04/10/13	S.Hotchkiss
AN	REVISED PER ECO 6100	02/12/16	Scott

UNLESS OTHERWISE SPECIFIED DIMENSIONS ARE IN INCHES TOLERANCES ARE:
ANGLES ±3°
DECIMALS .XX ±.02 .XXX ±.005

MATERIAL:

FINISH:

DASH NO.	NEXT ASSY	USED ON
TAB		1118/1119 DME

APPLICATION

APPROVALS	DATE
DRAWN BUD ENDICOTT	94/1/14
CHECKED O'CONNELL	94/5/1
ENGR R. TANN	94/5/1

AUTOCAD GENERATED

Selex ES
A Finmeccanica Company
11300 W. 89th Street
Overland Park, Kansas 66214
U.S.A.

KIT, DME ANTENNA

SIZE D CAGE CODE 64415 DWG NO. 470085 REV AN
SCALE: NONE SHEET 1 OF 2

US Army Corps of Engineers ®

MARK	DESCRIPTION	DATE

DESIGNED BY: K. THOMAS
DRAWN BY: D. BAUMGARDNER
CHECKED BY: D. HUGHES
SUBMITTED BY: D. DIEHL
SIZE: ANSI D
ISSUE DATE: MARCH 2017
SOLICITATION NO.:
CONTRACT NO.: PAYZ15002A

U.S. ARMY CORPS OF ENGINEERS
KONRAD ADENAUER RING 39
WIESBADEN, D-65187 / GERMANY

AECOM INTERNATIONAL, INC.
SIEMENSSTRAßE 10
NEU-ISENBURG, 63263

ERI: IMPROVE SUPPORT INFRASTRUCTURE
ŁASK AB, POLAND

DME ANTENNA DETAILS - 1
RUNWAY 28

SHEET ID
E-559

C:\PWWORKING\AECOM_EU\DBAUMGARDNER_TM\D0159839\15-D-0008-0003EEA505.DWG
5/12/2016 DAVID.BAUMGARDNER 1:500

100%

THIS DOCUMENT CONTAINS PROPRIETARY INFORMATION AND SUCH INFORMATION MAY NOT BE DISCLOSED TO OTHERS FOR ANY PURPOSE NOR FOR MANUFACTURING PURPOSES WITHOUT WRITTEN PERMISSION FROM Selex ES

DWG NO. 470085 SH 2 REV AN

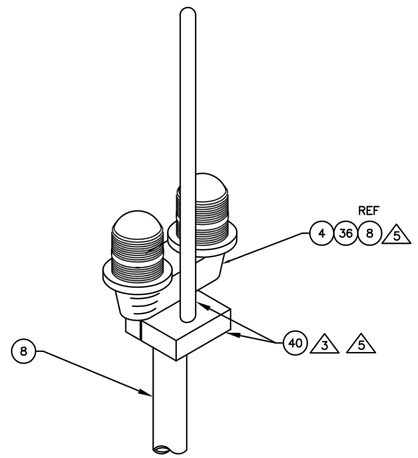

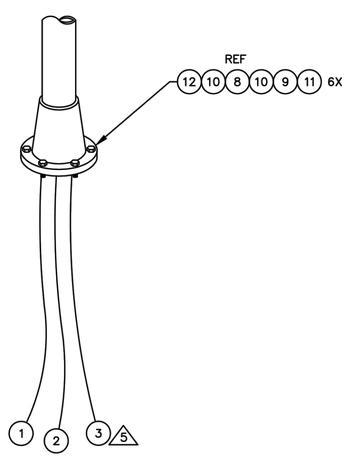

RE = RELOCATED
CF - CONTRACTOR FURNISHED

NOTES:

1. FOR –0010 AND –0012 (UNI–DIRECTIONAL ANTENNA) VERSION ONLY. PRIOR TO INSTALLATION OF THIS KIT, ENSURE THAT THE ANTENNA TOWER BASE CIVIL KIT (470252–0002) HAS BEEN INSTALLED SUCH THAT ANY TWO LEGS OF THE TOWER BASE ARE IN PARALLEL ALIGNMENT WITH THE DESIRED DIRECTION OF RADIATION.
2. FOR –0010 AND –0012 (UNI–DIRECTIONAL ANTENNA) VERSION ONLY. INSTALL ADAPTOR PLATE (ITEM 13) AND ANTENNA (ITEM 8) SO THE ANTENNA IS ORIENTED WITH IT'S MAIN RADIATION BEAM FACING THE DESIRED DIRECTION. NOTE: THE ANTENNA HAS A "MAIN BEAM" MARKING TO IDENTIFY THE DIRECTION OF MAXIMUM RADIATION.
3. 3/4" X 2" PIPE NIPPLE INCLUDED WITH ITEM 40. GROUND ROD MOUNTING BLOCK ATTACHES TO THIS PIPE NIPPLE.
4. SEE SHEET 2 FOR KITS WITHOUT TOWER.
5. ITEMS 3, 4, 36 AND 40 ARE NOT INCLUDED IN –0009, –0011, –0013, –0014, –0016 AND –0018 KITS. SEE 470291 OBSTRUCTION LIGHT/LIGHTNING ROD KIT FOR INCANDESCENT OR LED LIGHTING AS SPECIFIED ON SALES ORDER.
6. GROUND CLAMPS (ITEM 24) SHOULD BE SPACED NO FURTHER THAN 3FT [.91M] INTERVALS.
7. INSTALL CONDUIT (ITEM 15) ON TOP OF EXISTING TOWER FOUNDATION FOR ROUTING OF LIGHTNING PROTECTIION WIRE (ITEM 38). CONNECT WIRE TO TOWER FOUNDATION GROUND (P/O 470252).
8. SECURE CONDUIT (ITEM 30) TO TOWER STRUCTURE USING CLAMPS PROVIDED. SEE DETAIL B.

	FIND NO.	–0021	–0019	–0017	–0015	–0013	–0011	–0009	–0007	–0005	–0003	–0001	CAGE	DRAWING NO.	PART NO.	DESCRIPTION
		QTY REQD														
RE	40	–	–	–	–	–	–	–	1	1	1	1			950639–0000	LIGHTNING ROD, W/BRACKETS AND NIPPLE
	37–39															NOT USED
CF	36	–	–	–	–	–	–	–	1	1	1	1			347510–0004	REDUCER, 1"–3/4"
	13–35															NOT USED
CF	12	6	6	6	6	6	6	6	6	6	6	6			136027–0368	MACHINE BOLT, 3/8–16 X 2.50"
CF	11	6	6	6	6	6	6	6	6	6	6	6			321014–0000	HEX NUT, 3/8–16
CF	10	12	12	12	12	12	12	12	12	12	12	12			137000–0814	FLAT WASHER, 3/8"
CF	9	6	6	6	6	6	6	6	6	6	6	6			136504–0141	LOCK WASHER, 3/8", SPRING HELICAL
RE	8	–	–	–	–	1	1	–	1	1	–	–			950561–0000	ANTENNA – dB SYSTEMS 5100A
RE	8	1	1	1	1	–	–	1	–	–	1	1			950005–0001	ANTENNA – dB SYSTEMS 510A
RE	4	–	–	–	–	–	–	–	1	–	1	–			030338–0004	OBSTRUCTION LAMP ASSEMBLY, 230 V
RE	4	–	–	–	–	–	–	–	–	1	–	1			030338–0003	OBSTRUCTION LAMP ASSEMBLY, 115 V
CF	3	1	1	–	–	–	–	–	–	–	–	–			070219–0003	CABLE ASSEMBLY, AC POWER CORD, 100 FT.
CF	3	–	–	1	1	–	–	–	–	–	–	–			070219–0002	CABLE ASSEMBLY, AC POWER CORD, 75 FT.
CF	3	–	–	–	–	–	–	–	1	1	1	1			070219–0001	CABLE ASSEMBLY, AC POWER CORD, 50FT
CF	2	–	–	–	1	–	–	–	–	–	–	–			070476–0006	CABLE ASSEMBLY, MONITOR ANTENNA, 55 FT.
CF	2	–	–	1	–	–	–	–	–	–	–	–			070476–0005	CABLE ASSEMBLY, MONITOR ANTENNA, 65 FT.
CF	2	1	–	–	–	–	–	–	–	–	–	–			070476–0004	CABLE ASSEMBLY, MONITOR ANTENNA, 100 FT.
CF	2	–	–	–	–	1	–	–	–	–	–	–			070476–0003	CABLE ASSEMBLY, MONITOR ANTENNA, 75FT
CF	2	–	–	–	–	–	1	1	1	1	1	1			070476–0001	CABLE ASSEMBLY, MONITOR ANTENNA, 41FT
CF	1	–	–	–	–	1	–	–	–	–	–	–			070060–0001	CABLE ASSEMBLY, RF, 70', 1/2" HELIAX
CF	1	1	–	–	–	–	–	–	–	–	–	–			070217–0010	CABLE ASSEMBLY, RF, 65 FT.
CF	1	–	1	–	–	–	–	–	–	–	–	–			070217–0009	CABLE ASSEMBLY, RF, 65 FT.
CF	1	–	–	1	–	–	–	–	–	–	–	–			070217–0008	CABLE ASSEMBLY, RF, 55 FT.
CF	1	–	–	–	1	–	–	–	–	–	–	–			070217–0007	CABLE ASSEMBLY, RF, 45 FT.
CF	1	–	–	–	–	–	1	1	1	1	1	1			070217–0001	CABLE ASSEMBLY, RF, 35'
CF	–	2	2	2	2	2	2	2	2	2	2	2			470085–8001	DRAWING, DME ANTENNA KIT
	A														470085–00XX	KIT, DME ANTENNA

PARTS LIST

Selex ES
A Finmeccanica Company
11300 W. 89th Street
Overland Park, Kansas 66214 U.S.A.

DRAWN J Anderson 04/21/02
CONTRACT NO.

SIZE D CAGE CODE 64415 DWG. NO. 470085 REV AN
SCALE NONE SHEET 2 OF 2

US Army Corps of Engineers ®

MARK	DESCRIPTION	DATE

DESIGNED BY: K. THOMAS
DRAWN BY: D. BAUMGARDNER
CHECKED BY: D. HUGHES
SUBMITTED BY: D. DEHL
SIZE: ANSI D
ISSUE DATE: MARCH 2017
SOLICITATION NO.:
CONTRACT NO.: PAYZ15002A

U.S. ARMY CORPS OF ENGINEERS
KONRAD ADENAUER RING 39
WIESBADEN, D-65187 / GERMANY

AECOM INTERNATIONAL, INC.
SIEMENSSTRAGE 10
NEU-ISENBURG, 63263

ERI: IMPROVE SUPPORT INFRASTRUCTURE
LASK AB, POLAND

DME ANTENNA DETAILS - 2
RUNWAY 28

SHEET ID
E-560

C:\PWWORKING\AECOM_EU\DBAUMGARDNER_TM\D0159839\15-D-0008-0003EEA505.DWG
5/12/2016 DAVID.BAUMGARDNER 1:500

100%

THIS DOCUMENT CONTAINS PROPRIETARY INFORMATION AND SUCH INFORMATION MAY NOT BE DISCLOSED TO OTHERS FOR ANY PURPOSE NOR FOR MANUFACTURING PURPOSES WITHOUT WRITTEN PERMISSION FROM Selex ES

DWG NO. 470592 SH 1 REV C

REVISIONS			
REV	DESCRIPTION	DATE	APPROVED
–	RELEASED PER ERN LC01287	09/03/04	T WILLIAMS
A	REVISED P/L PER ECO 0261	03/11/05	S.Hotchkiss
B	REVISE ANTENNA MOUNTING BRACKET PER ECO 5948	03/19/15	S.Brand
C	REVISED PER ECO 6261	09/15/16	R.Scott

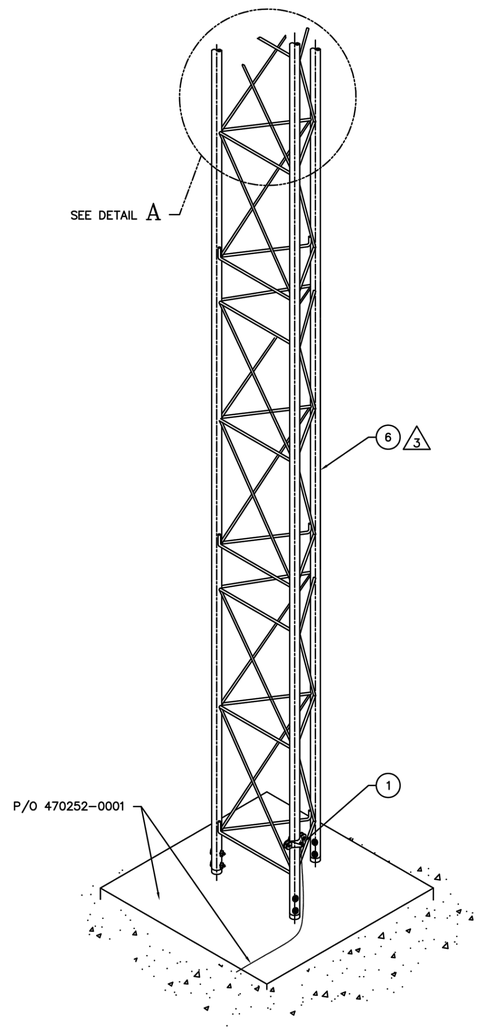

RE = RELOCATED
CF - CONTRACTOR FURNISHED

NOTES:

1. EXTRA HARDWARE MAY BE SUPPLIED WITH KIT.

2. APPLY APPROXIMATELY 1/8" OF SILICONE SEALING COMPOUND (ITEM 15) AROUND END OF TOWER (ITEM 6) PUSH ON CAP, (ITEM 12) AND LET SET UNTIL FIRM.

3. ANTENNA TOWER SHOWN FOR REFERENCE ONLY. ACTUAL TOWER MAY VARY SOMEWHAT IN APPEARANCE. ANTENNA TOWER MUST BE TURNED SO FLAT SIDE IS AWAY FROM SHELTER TO AVOID INTERFERENCE WITH CONDUIT AND ANTENNA MOUNTING PLATE.

4. APPLY APPROXIMATELY 1/8" OF SILICONE SEALING COMPOUND (ITEM 15) AROUND END OF CONDUIT (ITEM 9) PUSH ON CAP, (ITEM 18) AND LET SET UNTIL FIRM.

5. USE RETAINING STRAPS (ITEM 25) TO SECURE CABLE(S) BETWEEN ANTENNA AND EXTERIOR INTERFACE BOX TO TOWER.

FIND NO.	QTY REQD						CAGE	DRAWING NO.	PART NO.	DESCRIPTION
CF	–				2	2			470592–8001	DRAWING, TOWER MOUNT ANTENNA SYSTEM KIT
RE	26				1	–			950180–0003	TOWER, TOP SECTION
CF	25				20	10			302114–0002	STRAPS, TIEDOWN, BLACK
CF	24				50'	40'			443006–0000	RF CABLE, RG–214/U
RE	23				2	4			185212–0000	CONNECTOR, TYPE N
RE	22				–	1			185209–0000	CONNECTOR ADAPTER, TYPE N, RIGHT ANGLE
RE	21				–	1			030276–0001	MONITOR ANTENNA ASSEMBLY
CF	20				1	1			398505–0000	TAPE, INSULATION, SILICONE
CF	19				–	1			900132–0650	RIGID METAL – CONDUIT 2" X 5'
CF	18				–	1			292003–0006	PIPE CAP, 2", PVC, THREADED
CF	17				–	4			302091–0000	ANTENNA MOUNTING BRACKET, BASE, MODIFIED
CF	16				–	3			900130–0403	CONDUIT, RIGID, 1–1/4" X 4' PVC SCH 40
CF	15				–	1			900065–0000	COMPOUND, SEALING, SILICONE, CLEAR
CF	14				–	1			900087–0000	SOLVENT, CLEANING, PVC
CF	13				–	1			900088–0000	ADHESIVE, QUICK SET, PVC
CF	12				–	3			292002–0005	PIPE CAP, 1–1/4", PVC, UNTHREADED
CF	11				–	6			302090–0000	PIPE ANCHOR AND CLAMP, 2"
RE	10				–	1			701326–0002	PLATE, MOUNTING, FLAT
CF	9				–	4			347112–0005	STRAP, RETAINING, CONDUIT, 1"
RE	8				–	2			900084–0006	CHANNEL, STRUCTURAL, 1–5/8" X 1'–6"
RE	7				1	–			950304–0000	ANTENNA, SINGLE YAGI, 112 MHz, FFM
RE	7				–	1			950173–0000	ANTENNA, SINGLE YAGI, 75 MHz, MB
RE	6				2	1			950180–0000	TOWER SECTION, 10'
CF	5				–	4			327060–0000	SCREW, CAP, HEAD, HEX, 3/8–16 X 1–1/4
CF	4				–	4			321014–0000	NUT, HEX, PLAIN, 3/8–16
CF	3				–	4			136504–0141	WASHER, LOCK, 3/8", SPRING HELICAL
CF	2				10	20			137000–0814	WASHER, FLAT, .406" X .812" X .065"
CF	1				1	1			347122–0001	CLAMP, GROUNDING
	B								470592–0002	KIT, ANTENNA SYSTEM, 2139 FFM
	A								470592–0001	KIT, ANTENNA SYSTEM, 2130 MB
					–0002	–0001				

PARTS LIST

DASH NO.	NEXT ASSY	USED ON
–0002		2139 FFM
–0001		2130 MB

APPLICATION

UNLESS OTHERWISE SPECIFIED DIMENSIONS ARE IN INCHES
TOLERANCES ARE:
ANGLES ±3°
DECIMALS
.XX ±.010 .XXX ±.005

MATERIAL:

FINISH:

APPROVALS	DATE
DRAWN T WILLIAMS	08/13/04
CHECKED RIEKE	09/15/04
ENGR RIEKE	09/15/04

AUTOCAD GENERATED

Selex ES
A Finmeccanica Company
11300 W. 89th Street
Overland Park, Kansas 66214
U.S.A.

KIT, ANTENNA SYSTEM
TOWER MOUNT

SIZE D CAGE CODE 64415 DWG NO. 470592 REV C
SCALE NOTED SHEET 1 of 3

US Army Corps of Engineers ®

MARK	DESCRIPTION	DATE

ISSUE DATE: MARCH 2017
SOLICITATION NO.:
CONTRACT NO.: PAYZ15002A

DESIGNED BY: K. THOMAS
DRAWN BY: D. BAUMGARDNER
CHECKED BY: D. HUGHES
SUBMITTED BY: D. DIEHL
SIZE ANSI D

U.S. ARMY CORPS OF ENGINEERS
KONRAD ADENAUER RING 39
WIESBADEN, D-65187 / GERMANY

AECOM INTERNATIONAL, INC.
SIEMENSSTRASE 10
NEU-ISENBURG, 63263

ERI: IMPROVE SUPPORT INFRASTRUCTURE
ŁASK AB, POLAND

FAR FIELD MONITOR ANTENNA DETAILS - 1
RUNWAY 28

SHEET ID
E-561

C:\PWWORKING\AECOM_EU\DBAUMGARDNER_TM\D0159839\15-D-0008-0003EEA505.DWG
5/12/2016 DAVID.BAUMGARDNER 1:500

100%

THIS DOCUMENT CONTAINS PROPRIETARY INFORMATION AND SUCH INFORMATION MAY NOT BE DISCLOSED TO OTHERS FOR ANY PURPOSE NOR FOR MANUFACTURING PURPOSES WITHOUT WRITTEN PERMISSION FROM Selex ES

DWG NO. 470592 SH 2 REV C

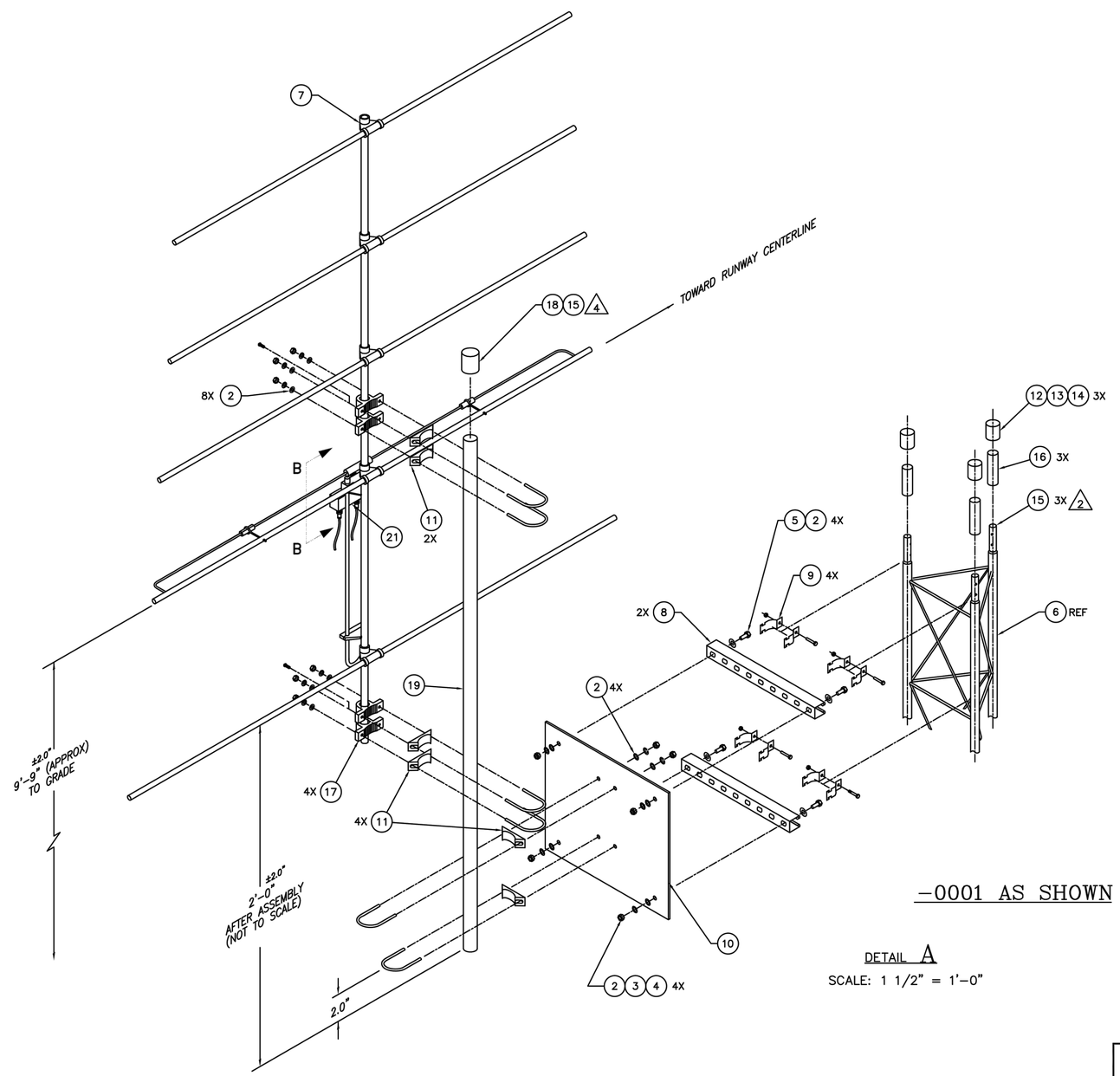

DETAIL A
SCALE: 1 1/2" = 1'-0"

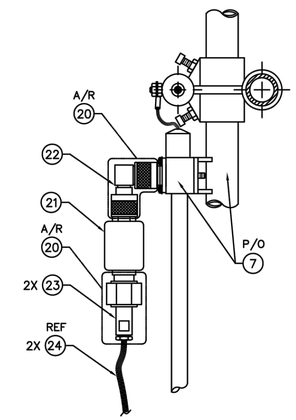

VIEW B-B
SCALE: 1/2

-0001 AS SHOWN

Selex ES
A Finmeccanica Company
11200 W. 89th Street
Overland Park, Kansas 66214 U.S.A.

DRAWN	T WILLIAMS	08/13/04	
CONTRACT NO.			
SIZE D	CAGE CODE 64415	DWG. NO. 470592	REV C
SCALE NOTED		SHEET 2 OF 3	

US Army Corps of Engineers ®

MARK	DESCRIPTION	DATE

DESIGNED BY: K. THOMAS	ISSUE DATE: MARCH 2017
DRAWN BY: D. BAUMGARDNER	SOLICITATION NO.:
CHECKED BY: D. HUGHES	CONTRACT NO.: PAYZ15002A
SUBMITTED BY: D. DIEHL	
SIZE: ANSI D	

U.S. ARMY CORPS OF ENGINEERS
KONRAD ADENAUER RING 39
WIESBADEN, D-65187 / GERMANY

AECOM INTERNATIONAL, INC.
SIEMENSSTRAGE 10
NEU-ISENBURG, 63263

ERI: IMPROVE SUPPORT INFRASTRUCTURE
LASK AB, POLAND

FAR FIELD MONITOR ANTENNA DETAILS - 2
RUNWAY 28

SHEET ID
E-562

C:\PWWORKING\AECOM_EU\DBAUMGARDNER_TM\D0159839\15-D-0008-0003EEA505.DWG
5/12/2016 DAVID.BAUMGARDNER 1:500

100%

THIS DOCUMENT CONTAINS PROPRIETARY INFORMATION AND SUCH INFORMATION MAY NOT BE DISCLOSED TO OTHERS FOR ANY PURPOSE NOR FOR MANUFACTURING PURPOSES WITHOUT WRITTEN PERMISSION FROM Selex ES

DWG NO. 470592 SH 3 REV C

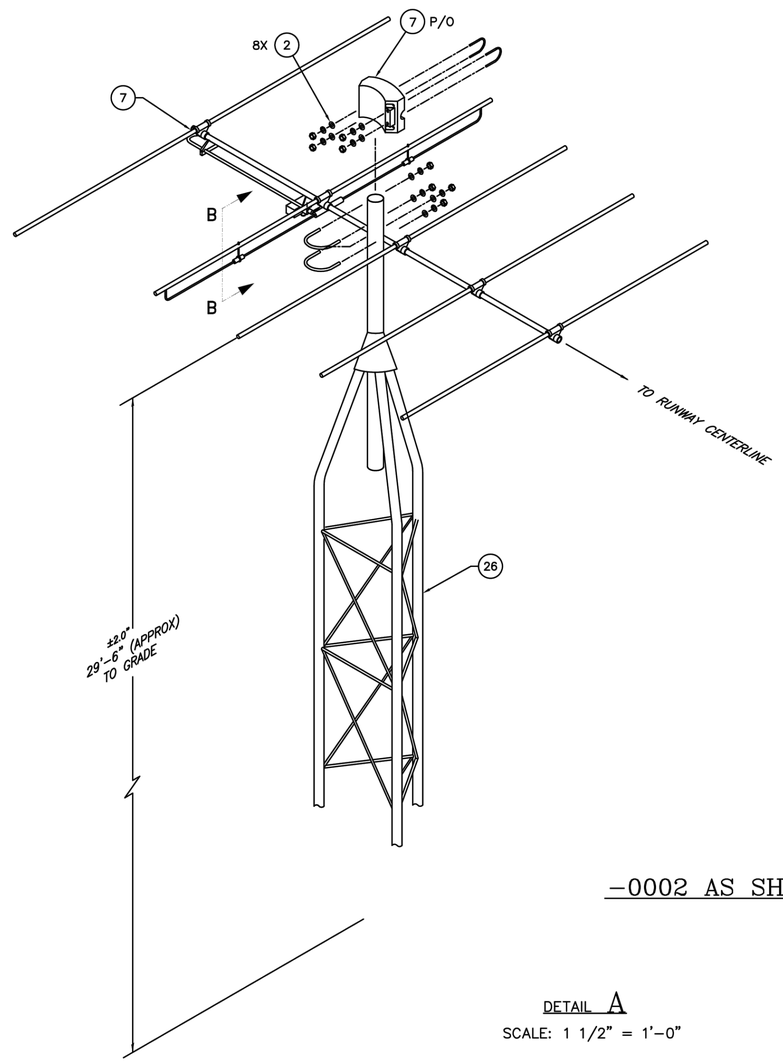

DETAIL A
SCALE: 1 1/2" = 1'-0"

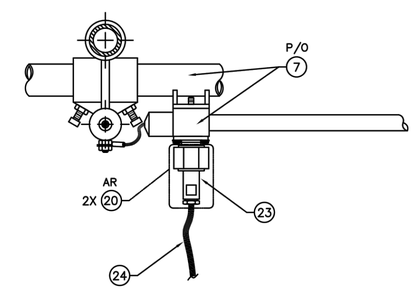

VIEW B–B
SCALE: 1/2

–0002 AS SHOWN

Selex ES
A Finmeccanica Company
11300 W. 89th Street
Overland Park, Kansas 66214 U.S.A.

DRAWN T WILLIAMS 08/13/04	SIZE D	CAGE CODE 64415	DWG. NO. 470592 REV C
CONTRACT NO.	SCALE NOTED		SHEET 3 OF 3

US Army Corps of Engineers ®

MARK	DESCRIPTION	DATE

DESIGNED BY: K. THOMAS
DRAWN BY: D. BAUMGARDNER
CHECKED BY: D. HUGHES
SUBMITTED BY: D. DEPHL
SIZE: ANSI D
ISSUE DATE: MARCH 2017
SOLICITATION NO.:
CONTRACT NO.: PAYZ15002A

U.S. ARMY CORPS OF ENGINEERS
KONRAD ADENAUER RING 39
WIESBADEN, D-65187 / GERMANY

AECOM INTERNATIONAL, INC.
SIEMENSSTRAGE 10
NEU-ISENBURG, 63263

ERI: IMPROVE SUPPORT INFRASTRUCTURE
LASK AB, POLAND

FAR FIELD MONITOR ANTENNA DETAILS - 3
RUNWAY 28

SHEET ID
E-563

C:\PWWORKING\AECOM_EU\DBAUMGARDNER_TM\D0159839\15-D-0008-0003EEA505.DWG
5/12/2016 DAVID.BAUMGARDNER 1:500

100%

THIS DOCUMENT CONTAINS PROPRIETARY INFORMATION AND SUCH INFORMATION MAY NOT BE DISCLOSED TO OTHERS FOR ANY PURPOSE NOR FOR MANUFACTURING PURPOSES WITHOUT WRITTEN PERMISSION FROM SELEX SISTEMI INTEGRATI INC.

DWG NO. 470597 SH 1 REV A

REVISIONS			
REV	DESCRIPTION	DATE	APPROVED
–	RELEASED PER ERN LC01296	10/11/04	S.Hotchkiss
A	REVISED WIRE P/N (ITEM 2) PER ECO 1017	05/18/06	S.Hotchkiss

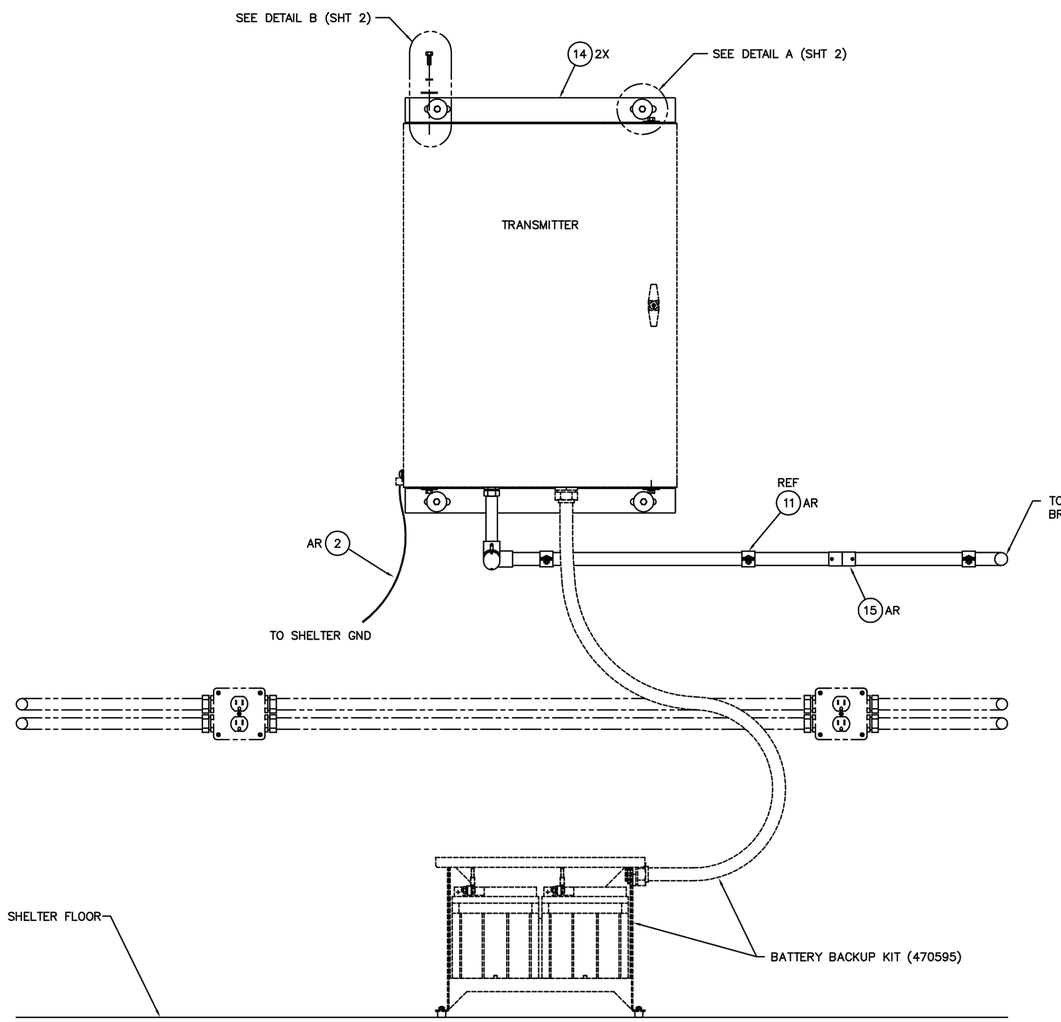

RE = RELOCATED
CF - CONTRACTOR FURNISHED

NOTES:

1. EXTRA QUANTITIES OF MOST ITEMS ARE SUPPLIED WITH KIT. ADDITIONAL ITEMS PROVIDED, BUT NOT SHOWN, ALLOW FOR INSTALLATION UNDER A VARIETY OF CONDITIONS.

2. CUT CONDUIT (ITEM 10) TO LENGTH AS REQUIRED.

3. ELECTRONICS CONNECTIONS INSIDE TRANSMITTER CABINET ARE AS FOLLOWS:

   IN USA:
   - CONNECT GREEN WIRE (ITEM 3) TO 1A1A1TB1–5 (AC EARTH)
   - CONNECT BLACK WIRE (LIVE) (ITEM 1) TO 1A1A1TB1–1 (AC LINE)
   - CONNECT WHITE WIRE (NEUTRAL) (ITEM 4) TO 1A1A1TB1–3 (AC NEUT)

   OUTSIDE USA:
   - CONNECT GREEN WIRE (ITEM 3) TO 1A1A1TB1–5 (AC EARTH)
   - CONNECT RED WIRE (LIVE) (ITEM 5) TO 1A1A1TB1–1 (AC LINE)
   - CONNECT BLACK WIRE (NEUTRAL) (ITEM 4) TO 1A1A1TB1–3 (AC NEUT)

4. USE CABLE TIES (ITEM 20), AS NECESSARY TO ROUTE AND SUPPORT WIRE INSIDE TRANSMITTER CABINET AND CIRCUIT BREAKER BOX.

FIND NO.	QTY REQD			CAGE	DRAWING NO.	PART NO.	DESCRIPTION
–			2			470597–8001	INSTALLATION DRAWING, 2130 MB/2139 FFM
CF	26		5			136027–0303	CAP SCREW, 1/4–20 X 1/2", HEX HEAD
CF	25		5			327606–0103	SCREW, LAG, HEX, 1/4 X 1 1/4", SS
RE	24		1			399039–0000	ALIGNMENT TOOL (NOT SHOWN)
CF	23		5			158056–0026	FUSE CARTRIDGE, 10 AMP (NOT SHOWN)
CF	22		5			158055–0021	FUSE CARTRIDGE, 6.3 AMP (NOT SHOWN)
CF	21		5			158055–0019	FUSE CARTRIDGE, 4 AMP (NOT SHOWN)
CF	20		40			302029–0000	WIRE TIES (NOT SHOWN)
CF	19		6			321015–0001	PLUSNUT, THREADED FASTENER
CF	18		10			327078–0000	WASHER, FENDER, 1/4 X 1 3/8"
CF	17		10			136504–0139	WASHER, LOCK, 1/4
CF	16		6			136027–0308	CAP SCREW, 1/4–20 X 1", HEX HEAD
CF	15		2			347148–0002	CONDUIT COUPLING, 3/4" EMT, W/SET SCREWS
RE	14		2			702672–0001	TRANSMITTER MOUNTING BRACKET
CF	13		10			137501–0011	HEX NUT, 1/4–20
CF	12		1 BOX			347048–0000	EXPANSION PLUGS W/SCREWS (QTY 100)
CF	11		5			347090–0002	CONDUIT RETAINER CLAMP
CF	10		4			900132–0250	CONDUIT, 3/4" X 5'–0" LG
CF	9		4			347517–0000	ELBOW, PULL, 90°, 3/4" EMT, W/SET SCREWS
CF	8		2			347516–0000	ELBOW, 90°, 3/4" EMT
CF	7		2			347116–1002	ADAPTER, CONDUIT, COMPRESSION
CF	6		10			136000–0083	MACHINE SCREW, 1/4–20 X 1"
CF	5		30'			146019–2222	RED WIRE, #12 AWG
CF	4		30'			146019–9999	WHITE WIRE, #12 AWG
CF	3		30'			146019–5555	GREEN WIRE, #12 AWG
CF	2		1			146006–0010	WIRE, #6 AWG, BARE, SOLID COPPER, 10'
CF	1		30'			146019–0000	BLACK WIRE, #12 AWG
CF	A					470597–0001	INSTALLATION KIT, 2130MB/2139 FFM
			–0001				

PARTS LIST

DASH NO.	NEXT ASSY	USED ON
–0001		2130/2139

APPLICATION

UNLESS OTHERWISE SPECIFIED DIMENSIONS ARE IN INCHES
TOLERANCES ARE:
ANGLES ±3°
DECIMALS
.XX ±.02 .XXX ±.005

MATERIAL:

FINISH:

CONTRACT NO.

APPROVALS		DATE
DRAWN	S.Hotchkiss	09/14/04
CHECKED	DAVID COX	10/14/04
ENGR	D. COX	10/14/04

AUTOCAD GENERATED

SELEX Sistemi Integrati
11300 W. 89th Street – Overland Park, Kansas 66214 – U.S.A.

INSTALLATION KIT
2130 MB / 2139 FFM

SIZE D CAGE CODE 64415 DWG NO. 470597 REV A
SCALE 1/8 SHEET 1 OF 2

US Army Corps of Engineers ®

MARK	DESCRIPTION	DATE

ISSUE DATE: MARCH 2017
SOLICITATION NO.:
CONTRACT NO.: PAYZ15002A

DESIGNED BY: K. THOMAS
DRAWN BY: D. BAUMGARDNER
CHECKED BY: D. HUGHES
SUBMITTED BY: D. OBEHL
SIZE: ANSI D

U.S. ARMY CORPS OF ENGINEERS
KONRAD ADENAUER RING 39
WIESBADEN, D-65187 / GERMANY

AECOM INTERNATIONAL, INC.
SIEMENSSTRASE 10
NEU-ISENBURG, 63263

ERI: IMPROVE SUPPORT INFRASTRUCTURE
LASK AB, POLAND

FAR FIELD MONITOR ANTENNA DETAILS - 4
RUNWAY 28

SHEET ID
E-564

C:\PWWORKING\AECOM_EU\DBAUMGARDNER_TM\D0159839\15-D-0008-0003EEA505.DWG
5/12/2016 DAVID.BAUMGARDNER 1:500

100%

THIS DOCUMENT CONTAINS PROPRIETARY INFORMATION AND SUCH INFORMATION MAY NOT BE DISCLOSED TO OTHERS FOR ANY PURPOSE NOR FOR MANUFACTURING PURPOSES WITHOUT WRITTEN PERMISSION FROM SELEX SISTEMI INTEGRATI INC.

DWG NO. 470597 SH 2 REV A

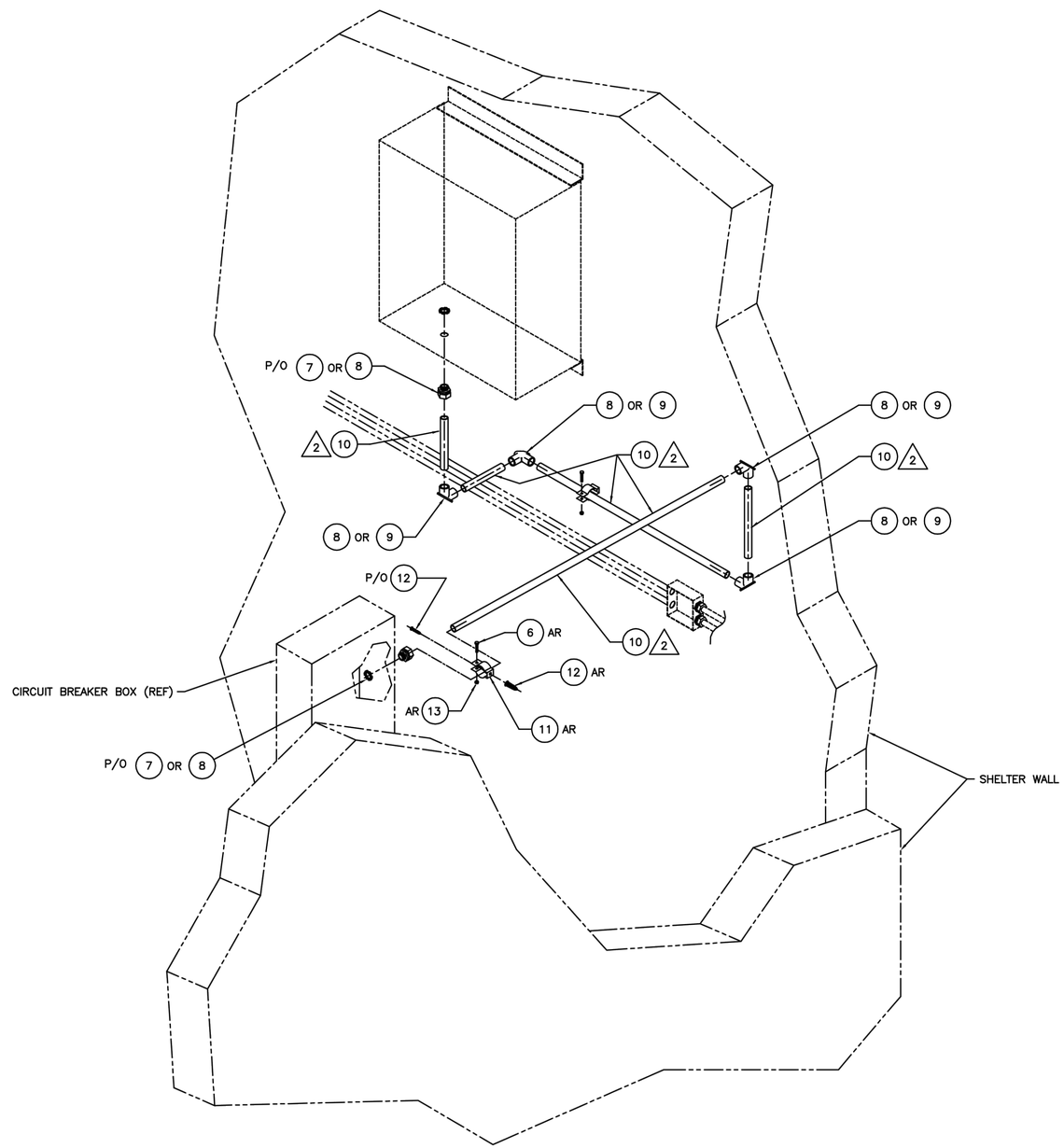

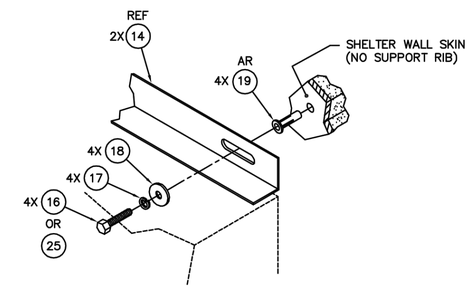

DETAIL A (4X)

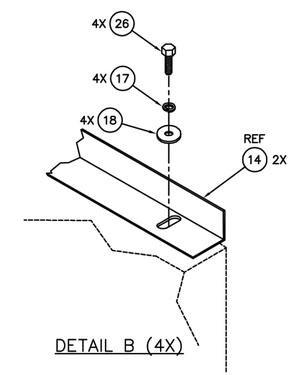

DETAIL B (4X)

SELEX Sistemi Integrati
11300 W. 89th Street
Overland Park, Kansas 66214 U.S.A.

DRAWN	S.Hotchkiss	09/14/04	SIZE D	CAGE CODE 64415	DWG. NO. 470597 REV A
CONTRACT NO.			SCALE 1/8		SHEET 2 OF 2

US Army Corps of Engineers ®

MARK	DESCRIPTION	DATE

ISSUE DATE: MARCH 2017
SOLICITATION NO.:
CONTRACT NO.: PAYZ15002A

DESIGNED BY: K. THOMAS
DRAWN BY: D. BAUMGARDNER
CHECKED BY: D. HUGHES
SUBMITTED BY: D. ORFIL
SIZE: ANSI D

U.S. ARMY CORPS OF ENGINEERS
KONRAD ADENAUER RING 39
WIESBADEN, D-65187 / GERMANY

AECOM INTERNATIONAL, INC.
SIEMENSSTRASE 10
NEU-ISENBURG, 63263

ERI: IMPROVE SUPPORT INFRASTRUCTURE
LASK AB, POLAND

FAR FIELD MONITOR ANTENNA DETAILS - 5
RUNWAY 28

SHEET ID
E-565

C:\PWWORKING\AECOM_EU\DBAUMGARDNER_TM\D0159839\15-D-0008-0003EEA505.DWG
5/12/2016 DAVID.BAUMGARDNER 1:500

100%

THIS DOCUMENT CONTAINS PROPRIETARY INFORMATION AND SUCH INFORMATION MAY NOT BE DISCLOSED TO OTHERS FOR ANY PURPOSE NOR FOR MANUFACTURING PURPOSES WITHOUT WRITTEN PERMISSION FROM Selex ES

DWG NO. 470503 SH 1 REV G

REVISIONS			
REV	DESCRIPTION	DATE	APPROVED
–	RELEASED PER ERN LC01015	11/16/99	BRASE
A	REVISED PER ECO 2100–699 & 2110–167	3/10/00	BRASE
B	REVISED PER ECO 2110–220	6/11/03	D.E.Falke
C	REVISED PART LIST PER ECO 0757	02/03/06	S.Hotchkiss
D	CHG ITM 6 PER ECO 1529	07/25/07	CFH
E	CHG TO YAGI ANTENNA PER ECO 3333	11/19/09	S.Hotchkiss
F	ADD 0002 & 0003 PER ECO 5813	09/24/14	S.Brand
G	REVISE YAGI ANTENNA & BRACKET PER ECO 5848	11/07/14	S.Brand

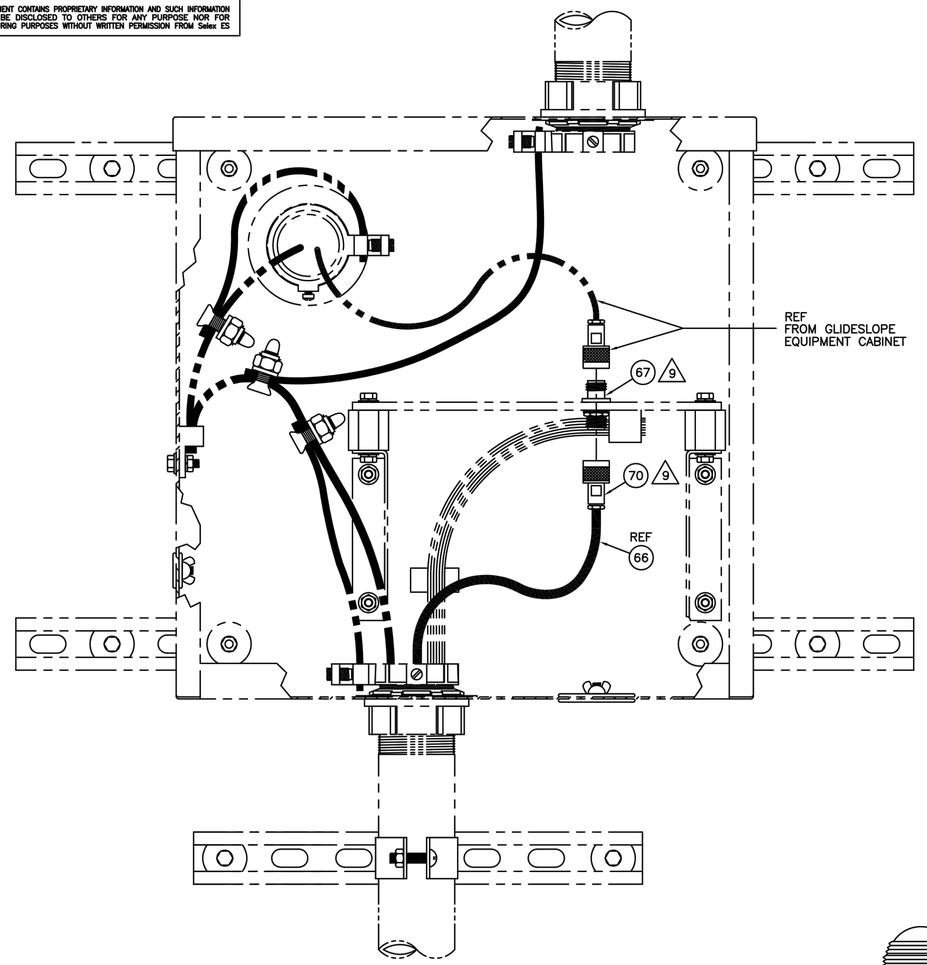

VIEW A–A
(FROM SHEET 3)
SCALE: 1/4
(GLIDESLOPE SHELTER EXTERNAL INTERFACE J–BOX)

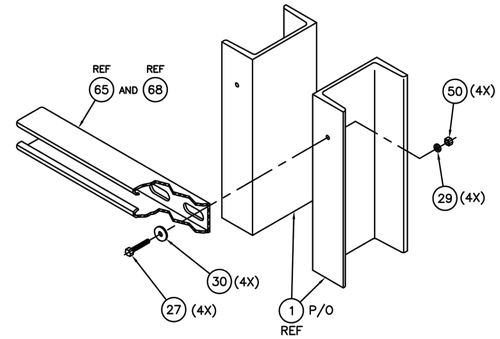

DETAIL E
(FROM SHEET 2)
SCALE: 1/4

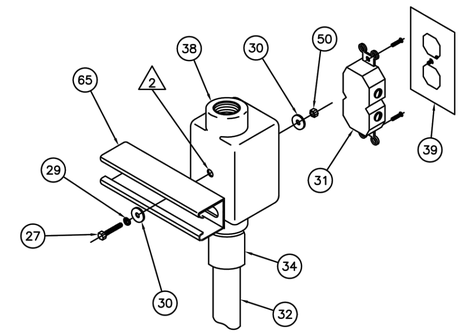

DETAIL B
SCALE: 1/4

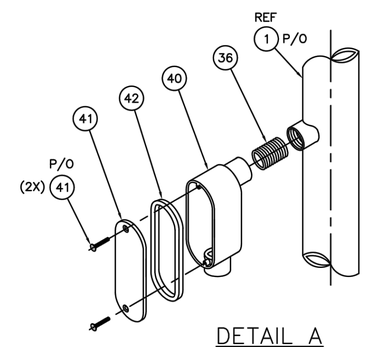

DETAIL A
(FROM SHEET 2)
SCALE: 1/4

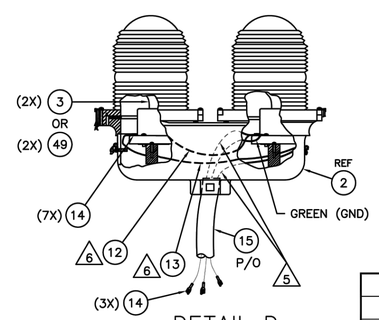

DETAIL D
(–0001)
SCALE: 1/2

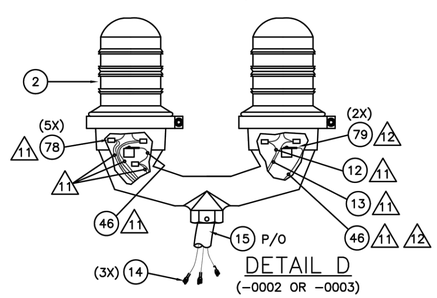

DETAIL D
(–0002 OR –0003)

NOTES:

1. FOR SHELTER INSTALLATION INSTRUCTIONS, SEE SHEET 3.
2. DRILL ø.281 (9/32") HOLE(S) FOR 1/4–20 HARDWARE.
3. CONNECTS TO MONITOR ANTENNA (ITEM 63).
4. SEE INSTRUCTIONS SUPPLIED WITH WENCH FOR ASSEMBLY.
5. CONNECT GOLD TERMINALS TO BLACK WIRE. CONNECT SILVER TERMINALS TO WHITE WIRE.
6. LIKE COLORED TERMINALS MUST BE CONNECTED. CONNECT GOLD TO GOLD AND SILVER TO SILVER.
7. ITEMS SHOWN WITHOUT FIND NUMBERS ON SHEET #3 ARE PART OF THE GS SHELTER INSTALLATION KIT (470082–0001), OR THE GS EXTERIOR INTERFACE KIT (470354–0001).
8. PVC JOINT CLEANING COMPOUND (ITEM 62) AND PVC CEMENT (ITEM 45) ARE PROVIDED BUT NOT SHOWN ON DRAWING.
9. WHEN A LIGHTNING PROTECTION GROUNDING PLATE (P/O KIT #470237–0005) IS INSTALLED, ENSURE ITEMS 67 AND 70 ARE CONNECTED TO THE BULKHEAD ADAPTER PROVIDED WITH LIGHTNING PROTECTION GROUNDING KIT.
10. WEATHERPROOF TAPE (ITEM 22) IS PROVIDED (NOT SHOWN) FOR ALL EXTERNAL COAXIAL CONNECTOR JUNCTIONS/TERMINATIONS.
11. TWIST HOT (BLACK) WIRES TOGETHER AND CAP WITH WIRE NUTS (ITEM 78). TWIST NEUTRAL (WHITE) WIRES TOGETHER AND CAP WITH WIRE NUTS (ITEM 78). TWIST GROUND (GREEN) WIRES TOGETHER AND CAP WITH WIRE NUTS (ITEM 78).
12. INSTALL TERMINAL LUGS (ITEM 13) ON GROUND WIRES (ITEM 12) AND ATTACH TO GROUND BOSSES ON ITEM 5 OR 6, USING SCREWS PROVIDED.

–0001		2110 GS
DASH NO.	NEXT ASSY	USED ON
APPLICATION		

UNLESS OTHERWISE SPECIFIED DIMENSIONS ARE IN INCHES
TOLERANCES ARE:
ANGLES ±3°
DECIMALS
.XX ±.02 .XXX ±.005

MATERIAL:

FINISH:

APPROVALS	DATE
DRAWN JIM ANDERSON	11/05/99
CHECKED BRASE	11/17/99
ENGR J.C.ROOS	11/17/99
AUTOCAD GENERATED	

Selex ES
A Finmeccanica Company
11300 W. 89th Street
Overland Park, Kansas 66214
U.S.A.

ANTENNA KIT DETAILS
NEAR FIELD MONITOR

SIZE D CAGE CODE 64415 DWG NO. 470503 REV G
SCALE 1/8–NOTED SHEET 1 OF 3

US Army Corps of Engineers ®

MARK	DESCRIPTION	DATE

DESIGNED BY: K. THOMAS
DRAWN BY: D. BAUMGARDNER
CHECKED BY: D. HUGHES
SUBMITTED BY: D. DEPAL
SIZE: ANSI D
ISSUE DATE: MARCH 2017
SOLICITATION NO.:
CONTRACT NO.: PAYZ15002A

U.S. ARMY CORPS OF ENGINEERS
KONRAD ADENAUER RING 39
WIESBADEN, D-65187 / GERMANY

AECOM INTERNATIONAL, INC.
SIEMENSSTRAßE 10
NEU-ISENBURG, 63263

ERI: IMPROVE SUPPORT INFRASTRUCTURE
ŁASK AB, POLAND

NEAR FIELD MONITOR ANTENNA DETAILS - 1
RUNWAY 28

SHEET ID
E-566

C:\PWWORKING\AECOM_EU\DBAUMGARDNER_TM\D0159839\15-D-0008-0003EEA505.DWG
5/12/2016 DAVID.BAUMGARDNER 1:500

100%

THIS DOCUMENT CONTAINS PROPRIETARY INFORMATION AND SUCH INFORMATION MAY NOT BE DISCLOSED TO OTHERS FOR ANY PURPOSE NOR FOR MANUFACTURING PURPOSES WITHOUT WRITTEN PERMISSION FROM Selex ES

DWG NO. 470503 SH 2 REV G

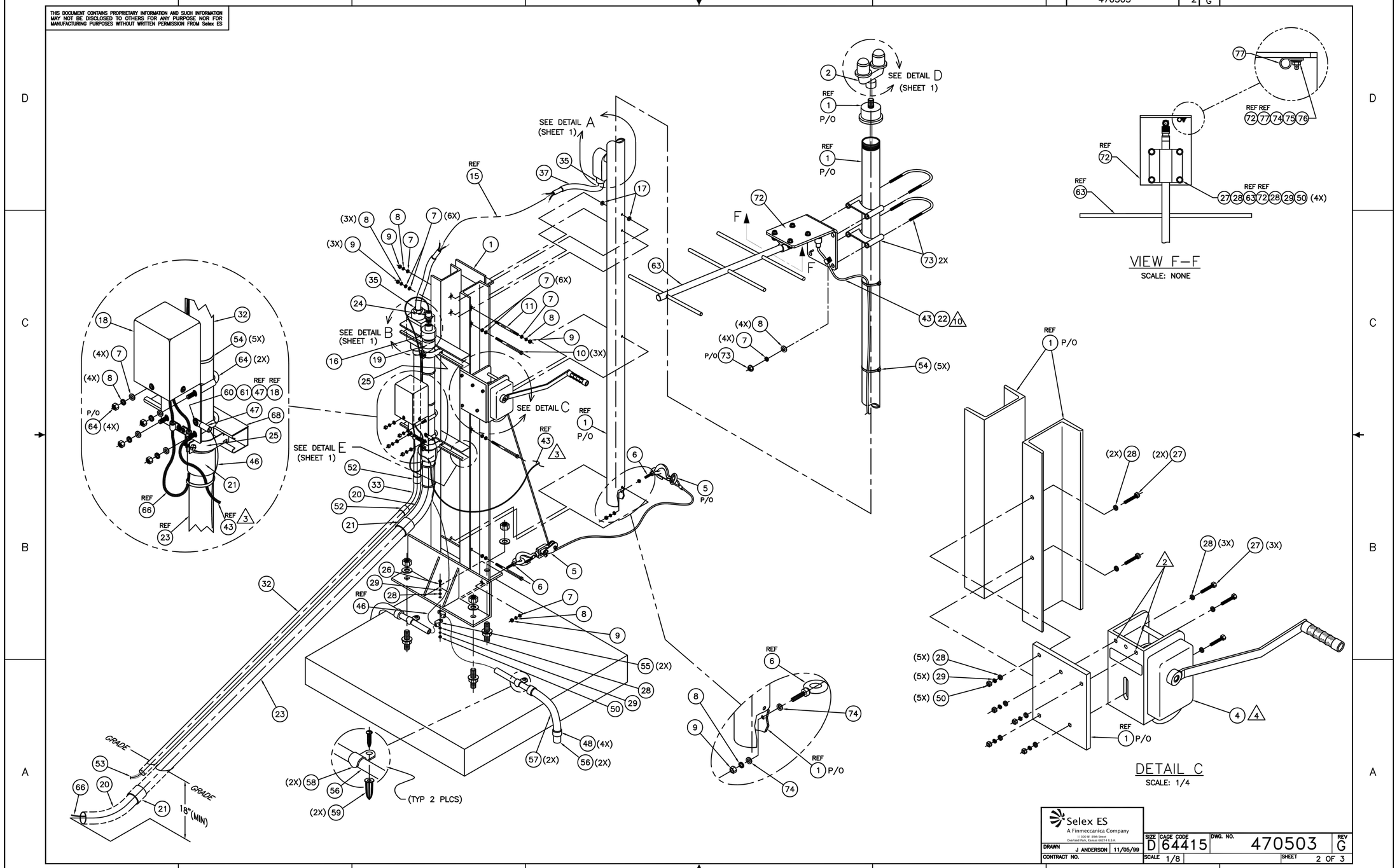

Selex ES
A Finmeccanica Company
11300 W. 89th Street
Overland Park, Kansas 66214 U.S.A.

DRAWN J ANDERSON 11/05/99	SIZE D	CAGE CODE 64415	DWG. NO. 470503 REV G
CONTRACT NO.	SCALE 1/8		SHEET 2 OF 3

US Army Corps of Engineers ®

MARK	DESCRIPTION	DATE

DESIGNED BY: K. THOMAS
DRAWN BY: D. BAUMGARDNER
CHECKED BY: D. HUGHES
SUBMITTED BY: S. EHL
SIZE: ANSI D
ISSUE DATE: MARCH 2017
SOLICITATION NO.:
CONTRACT NO.: PAYZ15002A

U.S. ARMY CORPS OF ENGINEERS
KONRAD ADENAUER RING 39
WIESBADEN, D-65187 / GERMANY

AECOM INTERNATIONAL, INC.
SIEMENSSTRAßE 10
NEU-ISENBURG, 63263

ERI: IMPROVE SUPPORT INFRASTRUCTURE
ŁASK AB, POLAND

NEAR FIELD MONITOR ANTENNA DETAILS - 2
RUNWAY 28

SHEET ID
E-567

C:\PWWORKING\AECOM_EU\DBAUMGARDNER_TM\D0159839\15-D-0008-0003EEA505.DWG
5/12/2016 DAVID.BAUMGARDNER 1:500

100%

THIS DOCUMENT CONTAINS PROPRIETARY INFORMATION AND SUCH INFORMATION MAY NOT BE DISCLOSED TO OTHERS FOR ANY PURPOSE NOR FOR MANUFACTURING PURPOSES WITHOUT WRITTEN PERMISSION FROM Selex ES

DWG NO. 470503 SH 3 REV G

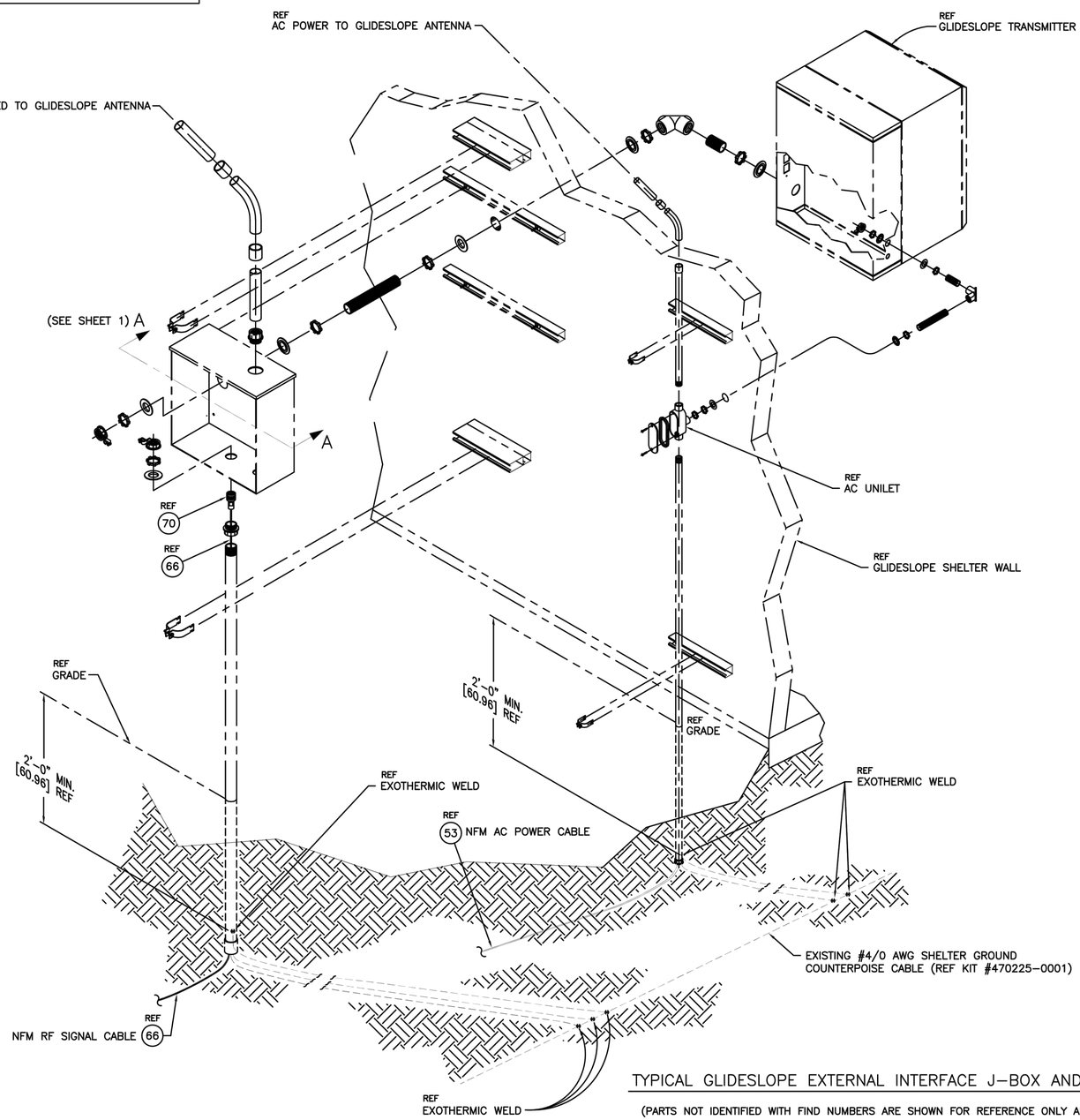

RE = RELOCATED
CF - CONTRACTOR FURNISHED

	FIND NO	PART NUMBER	DESCRIPTION	QTY -0001	QTY -0002	QTY -0003
	A	470503-0001	ANTENNA KIT, GS NFM	X		
	B	470503-0002	ANTENNA KIT, GS NFM, 120VAC LED LIGHTS		X	
	C	470503-0003	ANTENNA KIT, GS NFM, 240VAC LED LIGHTS			X
RE	1	950248-0000	PEDESTAL ANTENNA	1.0	1.0	1.0
RE	2	210004-0000	LAMP MARKER, GROUND OBSTRUCTION	1.0	–	–
RE	2	210009-0001	OBSTRUCTION LIGHT, DUAL LED, 120V	–	1.0	–
RE	2	210009-0002	OBSTRUCTION LIGHT, DUAL LED 220V	–	–	1.0
CF	3	212503-0000	LAMP, INCANDESCENT, 230V, 116 WATT	2.0	–	–
CF	4	950305-0000	WINCH, DRUM, HAND OPERATED	1.0	1.0	1.0
CF	5	950306-0000	WINCH CABLE ASSEMBLY	1.0	1.0	1.0
CF	6	347100-0001	EYE BOLT (3/8" THREADED SHAFT)	2.0	2.0	2.0
CF	7	137000-0815	3/8" SST STD FLAT WASHER	23.0	23.0	23.0
CF	8	136504-0141	3/8" SST LOCK WASHER	15.0	15.0	15.0
CF	9	137500-2384	3/8" SST STD NUT	7.0	7.0	7.0
CF	10	136027-0378	3/8" BOLT, HEX HEAD	3.0	3.0	3.0
RE	11	800717-0000	PIN, MAST PIVOT	1.0	1.0	1.0
CF	12	146023-0000	WIRE ELEC. 14 AWG, BLACK	1 FT	1 FT	1 FT
CF	13	146023-9999	WIRE ELEC. 14 AWG, WHITE	1 FT	1 FT	1 FT
CF	14	412000-0002	TERMINAL SPADE LUG #6	10.0	10.0	10.0
CF	15	443046-0000	CABLE, POWER	25 FT	25 FT	25 FT
CF	16	347510-1013	BUSHING, ELEC. CONDUIT – REDUCING	1.0	1.0	1.0
CF	17	137000-0818	FLAT WASHER, 1/4"	2.0	2.0	2.0
RE	18	030718-0001	NEAR FIELD MONITOR ASSY, GLIDESLOPE	1.0	1.0	1.0
CF	19	347083-0006	ADAPTER, ELEC CONDUIT	1.0	1.0	1.0
CF	20	347056-0006	2" PVC ELBOW	2.0	2.0	2.0
CF	21	347082-0006	2" COUPLING PVC	3.0	3.0	3.0
CF	22	312056-0000	TAPE, WEATHER-PROOFING, CONNECTOR	4.0	4.0	4.0
CF	23	900130-0600	CONDUIT,NM,RIGID, 2" X 10'	2.0	2.0	2.0
CF	24	180317-0032	CONNECTOR, CABLE, STRAIN RELIEF	1.0	1.0	1.0
CF	25	347112-0008	2" CONDUIT CLAMP	2.0	2.0	2.0
CF	26	136027-0310	1/4-20 x 1 1/4" BOLT	1.0	1.0	1.0
CF	27	136027-0308	1/4-20 x 1" BOLT	14.0	14.0	14.0
CF	28	137000-0810	FLAT WASHER, 1/4"	20.0	20.0	20.0
CF	29	136504-0139	1/4" LOCK WASHER	16.0	16.0	16.0
CF	30	322078-0000	FENDER WASHER	6.0	6.0	6.0
CF	31	185129-0001	CONN, DUPLEX RECPT	1.0	1.0	1.0
CF	32	900130-0300	CONDUIT, RIGID (PVC)	20 FT	20 FT	20 FT
CF	33	347056-0003	1" PVC ELBOW, 45 DEGREE	1.0	1.0	1.0
CF	34	347083-0003	ADAPTER, ELEC CONDUIT, 1" PVC	1.0	1.0	1.0
CF	35	347001-0000	CONDUIT COUPLING	2.0	2.0	2.0
CF	36	347057-0003	NIPPLE, ELEC CONDUIT 1" PIPE	1.0	1.0	1.0
CF	37	900080-0000	CONDUIT, METAL FLEX	10 FT	10 FT	10 FT
CF	38	347500-0000	UNILET, ALUMINUM 1" TYPE FDC	1.0	1.0	1.0
CF	39	347137-0000	COVER, CONDUIT OUTLET	1.0	1.0	1.0
CF	40	347502-0000	UNILET ALUMINUM 1" TYPE LB	1.0	1.0	1.0
CF	41	347503-0000	COVER, UNILET, ALUM	1.0	1.0	1.0
CF	42	347504-0000	GASKET, COVER	1.0	1.0	1.0
CF	43	070282-0018	CABLE ASSY, GS NFM	1.0	1.0	1.0
	44		NOT USED	–	–	–
CF	45	900088-0000	CEMENT, PVC	1.0	1.0	1.0
CF	46	146024-5555	WIRE, ELEC, NO 10 AWG, GREEN	10 FT	10 FT	10 FT
CF	47	400055-0002	TERM, LUG, NO 8 STUD, 10-12 AWG	2.0	2.0	2.0
CF	48	347082-0002	COUPLING, ELEC CONDUIT 3/4"	4.0	4.0	4.0
CF	49	212502-0000	LAMP 120V, 116 WATT TRAFFIC BULB	2.0	–	–
CF	50	137501-0011	1/4-20 NUT, PLAIN HEX	15.0	15.0	15.0
CF	51	900065-0000	SILICONE, RTV, CLEAR, 10.6 oz TUBE	1.0	1.0	1.0
CF	52	347082-0003	ELEC. CONDUIT COUPLING	2.0	2.0	2.0
CF	53	443040-0000	CABLE 12/2 UFWG NMB	400 FT	400 FT	400 FT
CF	54	302043-0000	STRAP, TIEDOWN	10.0	10.0	10.0
CF	55	400049-0000	TERMINAL LUG, GROUND #4 (L-270)	2.0	2.0	2.0
CF	56	900130-0200	CONDUIT,NM,RIGID, 3/4"X10' PVC	1.0	1.0	1.0
CF	57	347063-0002	90 DEGREE CONDUIT ELBOW 3/4"	2.0	2.0	2.0
CF	58	347064-0001	RETAINING STRAP	2.0	2.0	2.0
CF	59	347048-0000	EXPANSION PLUG	1 BOX	1 BOX	1 BOX
CF	60	136000-0045	SCREW, MACH, PHPH, 8-32 x 1/2"	1.0	1.0	1.0
CF	61	137000-0807	WASHER, FLAT, NO 8	1.0	1.0	1.0
CF	62	900087-0000	CLEANING COMPOUND	1.0	1.0	1.0
CF	63	950233-0003	ANTENNA, YAGI, NFM	1.0	1.0	1.0
CF	64	347170-0002	U-BOLT, FULL CIRCLE, 3.375 ID	2.0	2.0	2.0
CF	65	900084-0009	CHANNEL STRUCTURAL 1 5/8" x 1.15'	1.0	1.0	1.0
CF	66	443064-0400	CABLE, RF, ANDREW, LDF4-50A (1/2")	400 FT	400 FT	400 FT
CF	67	185124-0000	CONN, ELEC, BULKHEAD, TYPE N, F-F	1.0	1.0	1.0
CF	68	900084-0008	CHANNEL STRUCTURAL 1 5/8" x 0.75'	1.0	1.0	1.0
CF	69	137000-0814	WASHER FLAT, 3/8" SMALL OD	2.0	2.0	2.0
CF	70	180311-0000	CONN, MALE, TYPE N (1/2" HELIAX)	2.0	2.0	2.0
RE	71	561112-0001	INSTALLATION INSTRUCTIONS, GS NFM	2.0	2.0	2.0
RE	72	702114-0001	BRACKET, YAGI	1.0	1.0	1.0
RE	73	347170-0007	U-BOLT, 3 1/2" X 3/8-16	2.0	2.0	2.0
RE	74	137000-0806	WASHER, FLAT, #6 SST	3.0	3.0	3.0
CF	75	136504-0136	WASHER, LOCK, #6 SST	1.0	1.0	1.0
RE	76	137500-0264	NUT, HEX, SST, #6-32	1.0	1.0	1.0
RE	77	302008-0004	CLAMP, LOOP, .312" ID, NYLON	1.0	1.0	1.0
RE	78	199281-0001	CAP, WIRE CONN, WIRE NUT	–	5.0	5.0
CF	79	400062-0008	TERMINAL SPADE LUG, #8	–	2.0	2.0
	–	470503-8001	KIT, DRAWING, NFM, 2100 GS	2.0	2.0	2.0

TYPICAL GLIDESLOPE EXTERNAL INTERFACE J-BOX AND AC UNILET INSTALLATION

(PARTS NOT IDENTIFIED WITH FIND NUMBERS ARE SHOWN FOR REFERENCE ONLY AND ARE NOT INCLUDED IN THIS KIT)

Selex ES
A Finmeccanica Company
11300 W. 89th Street
Overland Park, Kansas 66214 U.S.A.

DRAWN J ANDERSON 11/05/99
CONTRACT NO.
SIZE D CAGE CODE 64415 DWG. NO. 470503 REV G
SCALE 1/8 SHEET 3 OF 3

US Army Corps of Engineers ®

MARK	DESCRIPTION	DATE

DESIGNED BY: K. THOMAS
DRAWN BY: D. BAUMGARDNER
CHECKED BY: D. HUGHES
SUBMITTED BY: D. DEHL
SIZE: ANSI D
ISSUE DATE: MARCH 2017
SOLICITATION NO.:
CONTRACT NO.: PAYZ15002A

U.S. ARMY CORPS OF ENGINEERS
KONRAD ADENAUER RING 39
WIESBADEN, D-65187 / GERMANY

AECOM INTERNATIONAL, INC.
SIEMENSSTRASE 10
NEU-ISENBURG, 63263

ERI: IMPROVE SUPPORT INFRASTRUCTURE
ŁASK AB, POLAND

NEAR FIELD MONITOR ANTENNA DETAILS - 3
RUNWAY 28

SHEET ID
E-568

C:\PWWORKING\AECOM_EU\DBAUMGARDNER_TM\D0159839\15-D-0008-0003EEA505.DWG
5/12/2016 DAVID.BAUMGARDNER 1:500

100%

THIS DOCUMENT CONTAINS PROPRIETARY INFORMATION AND SUCH INFORMATION MAY NOT BE DISCLOSED TO OTHERS FOR ANY PURPOSE NOR FOR MANUFACTURING PURPOSES WITHOUT WRITTEN PERMISSION FROM SELEX SISTEMI INTEGRATI INC.

DWG NO. 470344 SH 1 REV A

REVISIONS

REV	DESCRIPTION	DATE	APPROVED
–	RELEASED PER ERN LC00505	1–16–96	H.P.PEASE
A	REVISED PER ECO 1100–1517	1–27–99	BRASE

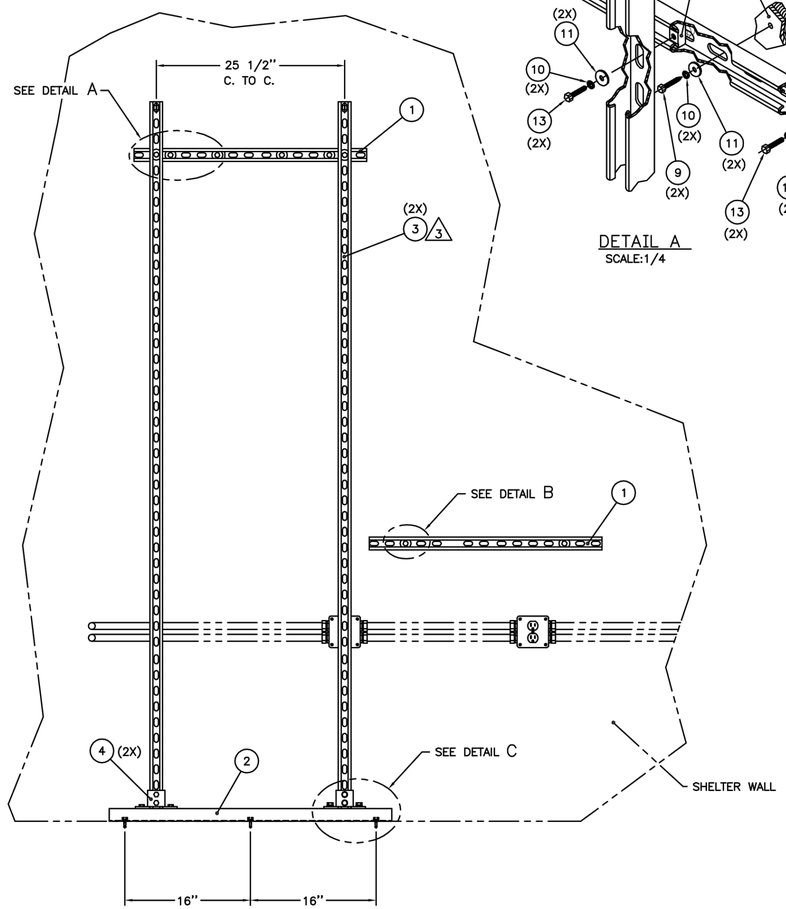

SCALE:1/8

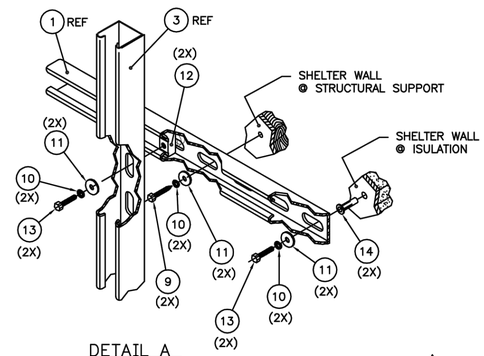

DETAIL A
SCALE:1/4

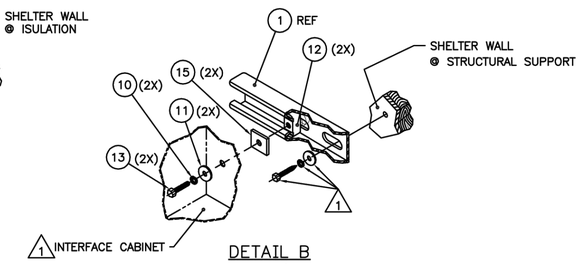

DETAIL B
SCALE:1/4

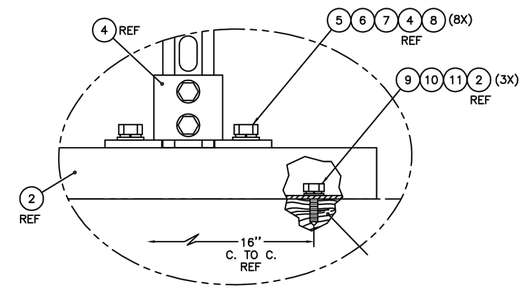

DETAIL C
SCALE:1/2

PARTS LIST

FIND NO.	QTY REQD	PART NO.	DESCRIPTION
A	2	470344	KIT DRAWING, TRANSMITTER MOUNTING
1	2	900083–0001	UNISTRUT, 1 5/8" X 1 13/16" X 2'–4"
2	1	900084–0013	UNISTRUT, 1 5/8" X 1 5/8" X 3'–0"
3	2	900084–0014	UNISTRUT, 1 5/8" X 1 5/8" X 7'–0"
4	2	900155–0000	UNISTRUT BRACKETS
5	8	347103–0406	BOLT, 1/2–13 X 1"
6	8	136504–0143	LOCK WASHER, 1/2"
7	8	137000–0818	FLAT WASHER, 1/2"
8	8	327077–0002	SPRING NUT, 1/2"
9	8	327606–0103	LAG BOLT, 1/4"
10	15	136504–0139	LOCK WASHER, 1/4"
11	15	327078–0000	FENDER WASHER, 1/4"
12	5	327077–0000	SPRING NUT, 1/4"
13	8	136027–0308	BOLT, 1/4–20 X 1"
14	3	321015–0001	PLUS NUT, 1/4"
15	4	321069–0000	SQUARE WASHER, 1 5/8"

3

NOTES:

1. THIS ITEM FOUND IN INTERFACE CABINET KIT.
2. FIND #3 MUST BE VERTICALLY PLUMB.
3. EXTRA HARDWARE INCLUDED.

DRAWING FOR REFERENCE ONLY

DASH NO.	NEXT ASSY	USED ON
–0001		

APPLICATION

UNLESS OTHERWISE SPECIFIED DIMENSIONS ARE IN INCHES
TOLERANCES ARE:
ANGLES ±3°
DECIMALS .XX ±.010 .XXX ±.005

MATERIAL:

FINISH:

CONTRACT NO.

APPROVALS	DATE
DRAWN L. WILSON	11/25/95
CHECKED BRASE	1/16/96
ENGR H.P.PEASE	1/16/96

AUTOCAD GENERATED

SELEX Sistemi Integrati
11300 W. 89th Street – Overland Park, Kansas 66214 – U.S.A.

KIT, TRANSFER MTG
REIFF SHELTER

SIZE D CAGE CODE 64415 DWG NO. 470344 REV A
SCALE NOTED SHEET 1 OF 1

US Army Corps of Engineers ®

MARK	DESCRIPTION	DATE

DESIGNED BY: K. THOMAS
DRAWN BY: D. BAUMGARDNER
CHECKED BY: D. HUGHES
SUBMITTED BY: S. ZEHL
SIZE: ANSI D
ISSUE DATE: MARCH 2017
SOLICITATION NO.:
CONTRACT NO.: PAYZ15002A

U.S. ARMY CORPS OF ENGINEERS
KONRAD ADENAUER RING 39
WIESBADEN, D-65187 / GERMANY

AECOM INTERNATIONAL, INC.
SIEMENSSTRASE 10
NEU-ISENBURG, 63263

ERI: IMPROVE SUPPORT INFRASTRUCTURE
LASK AB, POLAND

EQUIPMENT RACK INSTALLATION DETAILS - 1
RUNWAY 28

SHEET ID
E-569

C:\PWWORKING\AECOM_EU\DBAUMGARDNER_TM\D0159839\15-D-0008-0003EEA505.DWG
5/12/2016 DAVID.BAUMGARDNER 1:500

100%

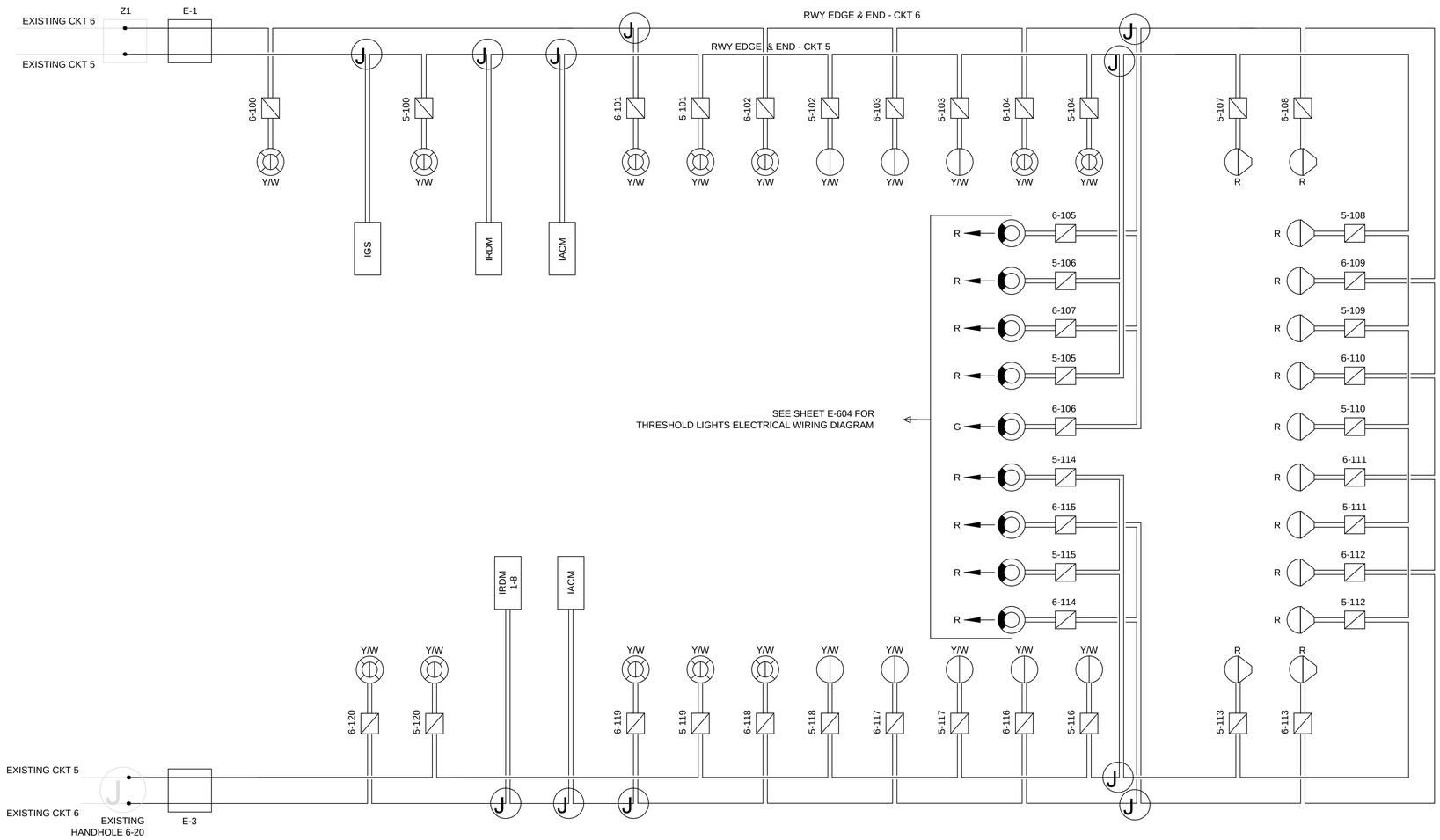

LEGEND:

ELEC CIRCUIT
OBWÓD ELEKTRYCZNY

ELEC MANHOLE
STUDNIA ELEKTRYCZNA

SERIES ISOLATING TRANSFORMER
TRANSFORMATOR SEPARACYJNY

BIDIR. RWY EDGE SEMI FLUSH LIGHT
ZAGŁĘBIONE ŚWIATŁO KRAWĘDZI DS

BIDIR. RWY EDGE ELEVATED LIGHT
DWUKIER. NAZIEMNE ŚWIATŁO KRAWĘDZI DS

UNIDIR. OVRN EDGE ELEVATED LIGHT
JEDNOKIER. NAZIEMNE ŚWIATŁO KRAWĘDZI WYBIEGU

BIDIR. THRESHOLD&RWY END INSET LIGHT
DWUKIER. ZAGŁĘBIONE ŚWIATŁO PROGU I KOŃCA DS

IRDM
1-8

IRDM SIGN
ZNACZNIK IRDM

R

LAMP COLOUR: R - RED, Y - YELLOW, W - WHITE (CLEAR), B - BLUE, G - GREEN
KOLOR ŹRÓDŁA ŚWIATŁA: R - CZERWONY, Y - ŻÓŁTY, W - BIAŁY, B - NIEBIESKI, G - ZIELONY

J

JUNCTION BOX
SKRZYNKA PRZYŁĄCZENIOWA

NOTES:
BIDIR. THRESHOLD&RWY END INSET LIGHT HAS TWO SEPARATE CIRCUITS - WIRING DIAGRAM FOR THRESHOLD LIGHTS IS SHOWN ON SHEET E-604

US Army Corps of Engineers®

MARK	DESCRIPTION	DATE

ISSUE DATE: MARCH 2017
SOLICITATION NO.:
PROJECT NO.: PAY215002A

DESIGNED BY: K. LOPEZ
DRAWN BY: L. ŁAWICKA
CHECKED BY: K. LEPERA
SUBMITTED BY: D. DIEHL
SIZE: ANSI D

U.S. ARMY CORPS OF ENGINEERS
KONRAD ADENAUER RING 39
WIESBADEN, D-65187 / GERMANY

AECOM INTERNATIONAL, INC.
SIEMENSSTRAGE 10
NEU-ISENBURG, 63263

ERI: IMPROVE SUPPORT INFRASTRUCTURE
LASK AB, POLAND

RWY EDGE LIGHTS - ELECTRICAL WIRING DIAGRAM
ŚWIATŁA KRAWĘDZI DS - SCHEMAT ELEKTRYCZNY

SHEET ID
E-601

C:\PWWORKING\AECOM_EU\LLAWICKA\ID0159839\15-D-0008-0003EEA601.DWG
5/13/2016 LUCYNA.LAWICKA SCALE: NTS

100%

LEGEND:

ELEC CIRCUIT
OBWÓD ELEKTRYCZNY

E-4
ELEC MANHOLE
STUDNIA ELEKTRYCZNA

SERIES ISOLATING TRANSFORMER
TRANSFORMATOR SEPARACYJNY

UNI-DIRECTIONAL APPROACH ELEVATED LIGHT
JEDNOKIERUNKOWE NAZIEMNE ŚWIATŁO PODEJŚCIA

UNI-DIRECTIONAL APPROACH INSET LIGHT
JEDNOKIERUNKOWE ZAGŁĘBIONE ŚWIATŁO PODEJŚCIA

W
LAMP COLOUR: R - RED, Y - YELLOW, W - WHITE (CLEAR), B - BLUE, G - GREEN
KOLOR ŹRÓDŁA ŚWIATŁA: R - CZERWONY, Y - ŻÓŁTY, W - BIAŁY, B - NIEBIESKI, G - ZIELONY

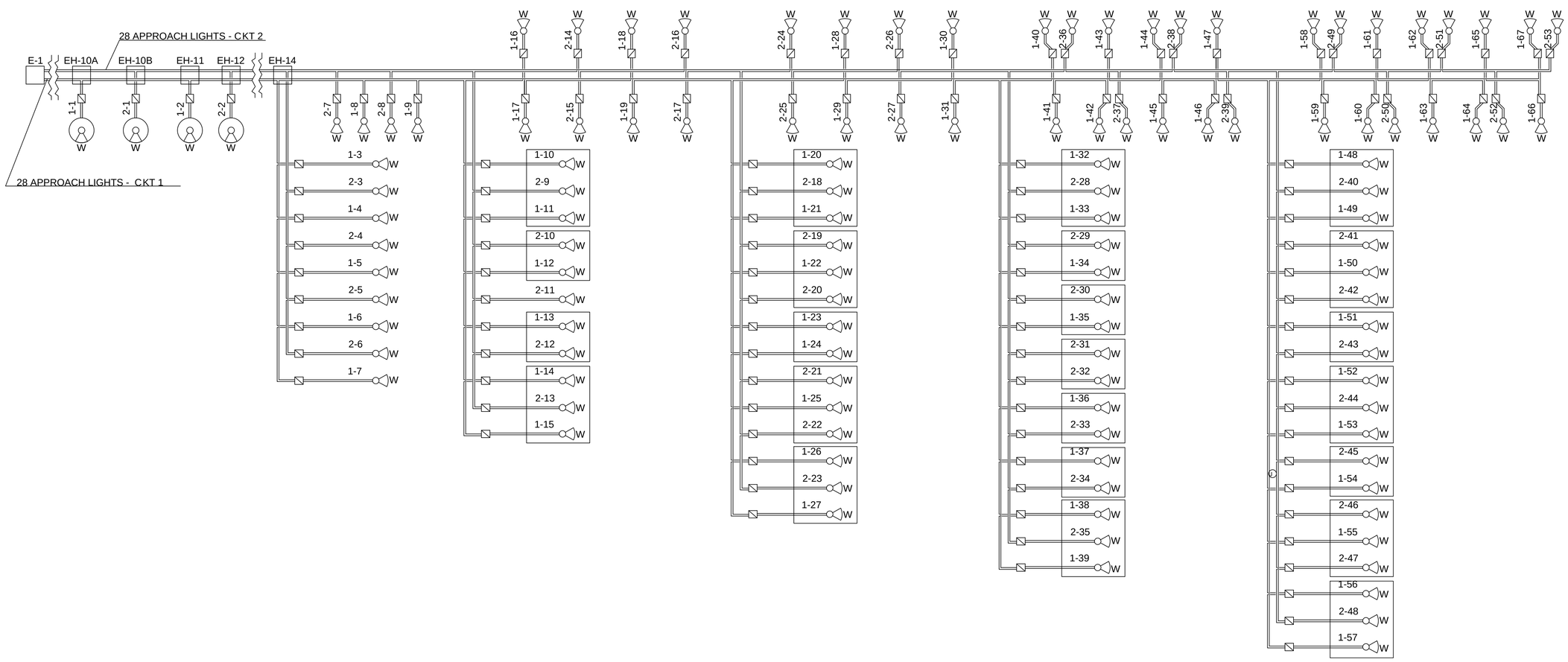

US Army Corps of Engineers®

MARK	DESCRIPTION	DATE

ISSUE DATE: MARCH 2017
SOLICITATION NO.:
PROJECT NO.: PAY215002A

DESIGNED BY: K. LOPERA
DRAWN BY: L. ŁAWICKA
CHECKED BY: K. LEPERA
SUBMITTED BY: D. DIEHL
SIZE: ANSI D

U.S. ARMY CORPS OF ENGINEERS
KONRAD ADENAUER RING 39
WIESBADEN, D-65187 / GERMANY

AECOM INTERNATIONAL, INC.
SIEMENSSTRAGE 10
NEU-ISENBURG, 63263

ERI: IMPROVE SUPPORT INFRASTRUCTURE
ŁASK AB, POLAND

APPROACH LIGHTS - ELECTRICAL WIRING DIAGRAM
ŚWIATŁA PODEJŚCIA - SCHEMAT ELEKTRYCZNY

SHEET ID
E-602

C:\PWWORKING\AECOM_EU\MAREK.TARKOWSKI\D0159839\15-D-0008-0003EEA601.DWG
5/13/2016 MAREK.TARKOWSKI SCALE: NTS

100%

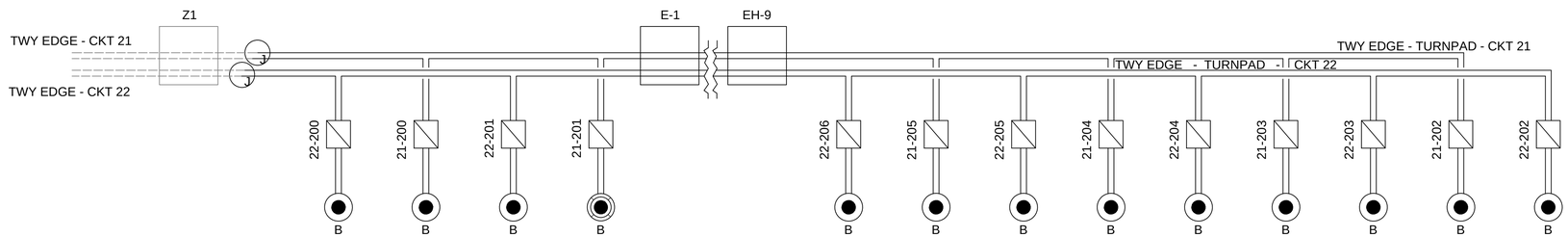

TAXIWAY AND TURNPAD EDGE LIGHTING

LEGEND:

- ELEC CIRCUIT / OBWÓD ELEKTRYCZNY
- E-3 — ELEC MANHOLE / STUDNIA ELEKTRYCZNA
- SERIES ISOLATING TRANSFORMER / TRANSFORMATOR SEPARACYJNY
- TAXIWAY EDGE ELEVATED LIGHT / ŚWIATŁO NAZIEMNE KRAWĘDZI DK
- TAXIWAY EDGE SEMI FLUSH LIGHT / ŚWIATŁO ZAGŁĘBIONE KRAWĘDZI DK
- PAPI LAMP / LAMPA PAPI
- W — LAMP COLOUR: R - RED, Y - YELLOW, W - WHITE (CLEAR), B - BLUE, G - GREEN / KOLOR ŹRÓDŁA ŚWIATŁA: R - CZERWONY, Y - ŻÓŁTY, W - BIAŁY, B - NIEBIESKI, G - ZIELONY

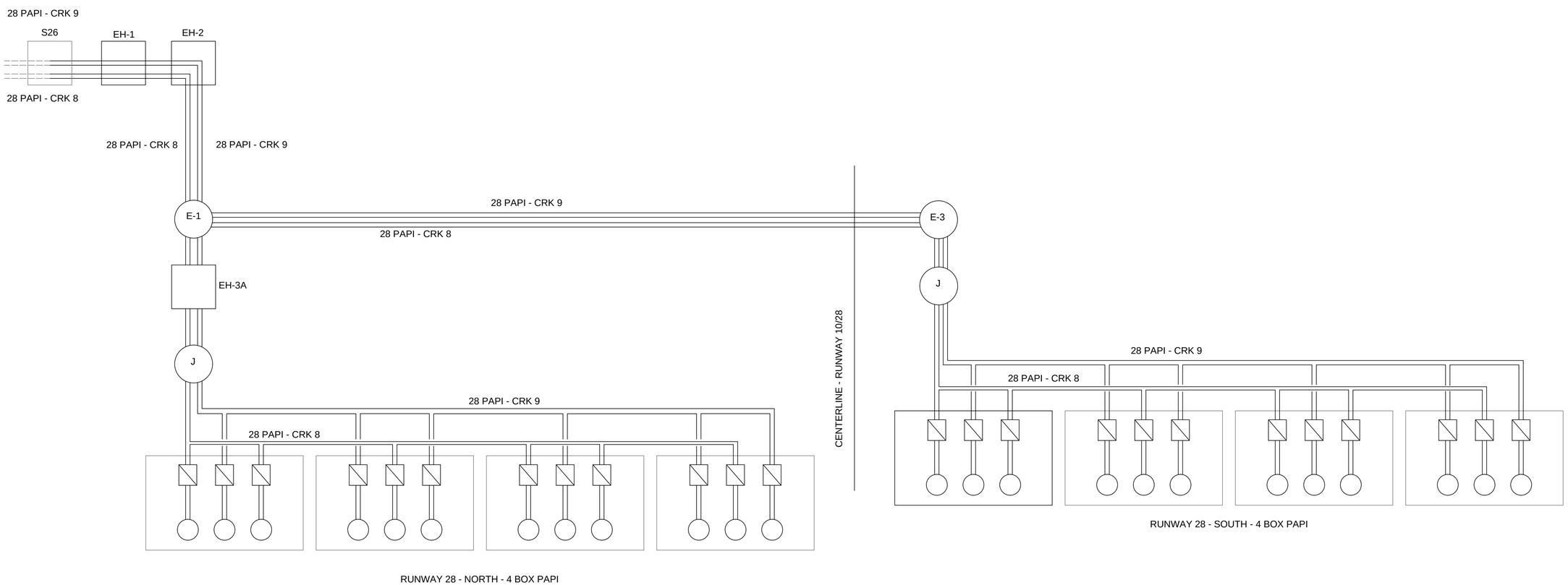

RUNWAY 28 PAPI

US Army Corps of Engineers®

MARK	DESCRIPTION	DATE

DESIGNED BY: K. LORENZ
DRAWN BY: L. ŁAWICKA
CHECKED BY: K. LEPERA
SUBMITTED BY: D. DIEHL
SIZE: ANSI D
ISSUE DATE: MARCH 2017
SOLICITATION NO.:
PROJECT NO.: PAYZ15002A

U.S. ARMY CORPS OF ENGINEERS
KONRAD ADENAUER RING 39
WIESBADEN, D-65187 / GERMANY

AECOM INTERNATIONAL, INC.
SIEMENSSTRAGE 10
NEU-ISENBURG, 63263

ERI: IMPROVE SUPPORT INFRASTRUCTURE
ŁASK AB, POLAND

TWY EDGE & RWY TURN PAD LIGHTS
ELEC WIRING DIAGRAM - SCHEMAT ELEKTRYCZNY
ŚW. KRAW. DR. KOŁOWANIA I PŁYTY ZAWRACANIA

SHEET ID
E-603

C:\PWWORKING\AECOM_EU\MAREK.TARKOWSKI\D0159839\15-D-0008-0003EEA601.DWG
5/13/2016 MAREK.TARKOWSKI SCALE: NTS

100%

LEGEND:

ELEC CIRCUIT
OBWÓD ELEKTRYCZNY

E-3
ELEC MANHOLE
STUDNIA ELEKTRYCZNA

SERIES ISOLATING TRANSFORMER
TRANSFORMATOR SEPARACYJNY

BIDIR. THRESHOLD&RWY END INSET LIGHT
DWUKIER. ZAGŁĘBIONE ŚWIATŁO PROGU I KOŃCA DS

UNIDIR.THRESHOLD INSET LIGHT
JEDNOKIER. ZAGŁĘBIONE ŚWIATŁO PROGU

W
LAMP COLOUR: R - RED, Y - YELLOW, W - WHITE (CLEAR), B - BLUE, G - GREEN
KOLOR ŹRÓDŁA ŚWIATŁA: R - CZERWONY, Y - ŻÓŁTY, W - BIAŁY, B - NIEBIESKI, G - ZIELONY

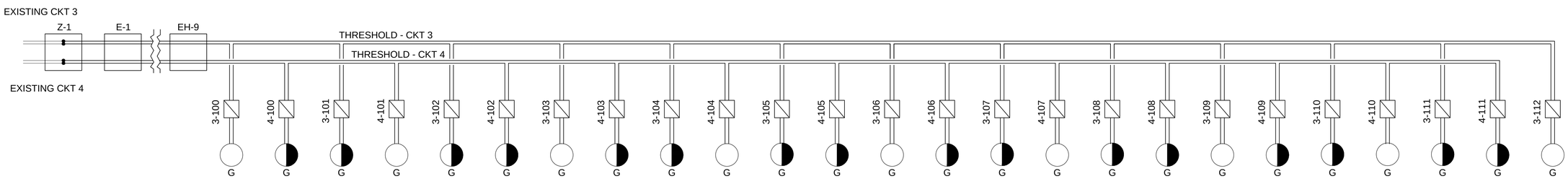

NOTES:
BIDIR. THRESHOLD&RWY END INSET LIGHT HAS TWO SEPARATE CIRCUITS - WIRING DIAGRAM FOR RWY END LIGHTS IS SHOWN ON SHEET E-601

US Army Corps of Engineers®

MARK	DESCRIPTION	DATE

ISSUE DATE: MARCH 2017
SOLICITATION NO.:
PROJECT NO.: PAYZ15002A

DESIGNED BY: K. LORENZ
DRAWN BY: L. ŁAWICKA
CHECKED BY: K. LEPERA
SUBMITTED BY: S. DIEHL
SIZE: ANSI D

U.S. ARMY CORPS OF ENGINEERS
KONRAD ADENAUER RING 39
WIESBADEN, D-65187 / GERMANY

AECOM INTERNATIONAL, INC.
SIEMENSSTRASE 10
NEU-ISENBURG, 63263

ERI: IMPROVE SUPPORT INFRASTRUCTURE
ŁASK AB, POLAND

THRESHOLD LIGHTS - ELEC WIRING DIAGRAM
ŚWIATŁA PROGU - SCHEMAT ELEKTRYCZNY

SHEET ID
E-604

C:\PWWORKING\AECOM_EU\MAREK.TARKOWSKI\D0159839\15-D-0008-0003EEA601.DWG
5/13/2016 MAREK.TARKOWSKI SCALE: NTS

100%

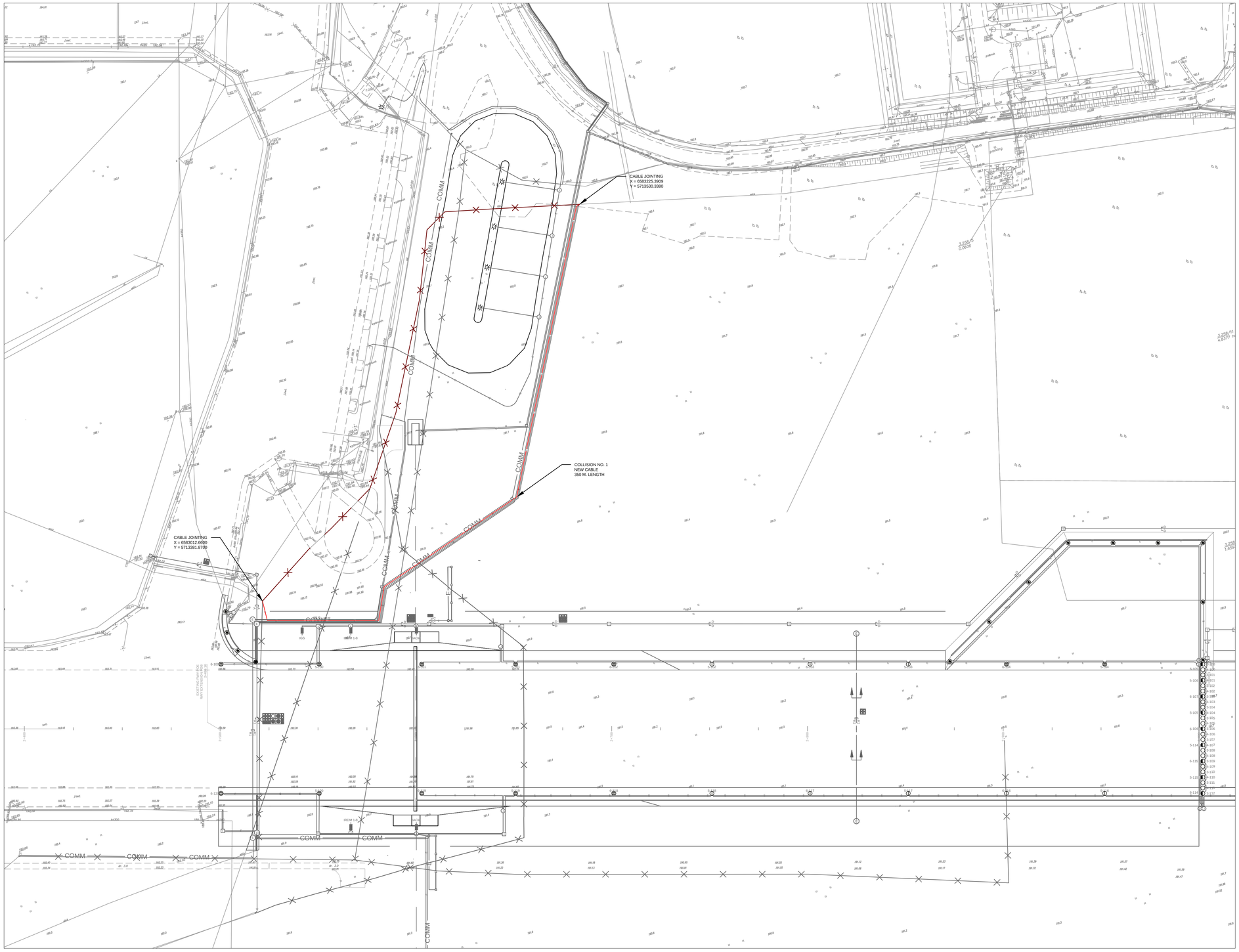

N

LEGEND:

PROPOSED CABLE
PROJ. KABEL

CABLE DEMOLITION
KABEL DO DEMONTAŻU

COLLISION NO. 1:

CABLE DISASSEMBLY - 352 LM

CABLE JOINTING - 2 LS

CABLE TRENCH - 320 LM

YAKY4x120mm² CABLE - 350 LM

CABLE PROTECTION PIPE HDPE(110)
1 LM

0 25
SCALE IN METERS

US Army Corps of Engineers®

MARK	DESCRIPTION	DATE

ISSUE DATE: MARCH 2017
SOLICITATION NO.:
PROJECT NO.: PAY215002A

DESIGNED BY: K. LOPEZ
DRAWN BY: M. STASIEWICZ
CHECKED BY: K. LEPERA
SUBMITTED BY: D. DIEHL
SIZE: ANSI D

U.S. ARMY CORPS OF ENGINEERS
KONRAD ADENAUER RING 39
WIESBADEN, D-65187 / GERMANY

AECOM INTERNATIONAL, INC.
SIEMENSSTRAE 10
NEU-ISENBURG, 63263

ERI: IMPROVE SUPPORT INFRASTRUCTURE
ŁASK AB, POLAND

ELECTRICAL COLLISIONS SITE PLAN
PLAN SYTUACYJNY KOLIZJI ELEKTRYCZNYCH

SHEET ID
E-605

C:\PWWORKING\AECOM_EU\LLAWICKA\D0159839\15-D-0008-0003EE-106.DWG
5/12/2016 LUCYNA.LAWICKA 1:1000

100%

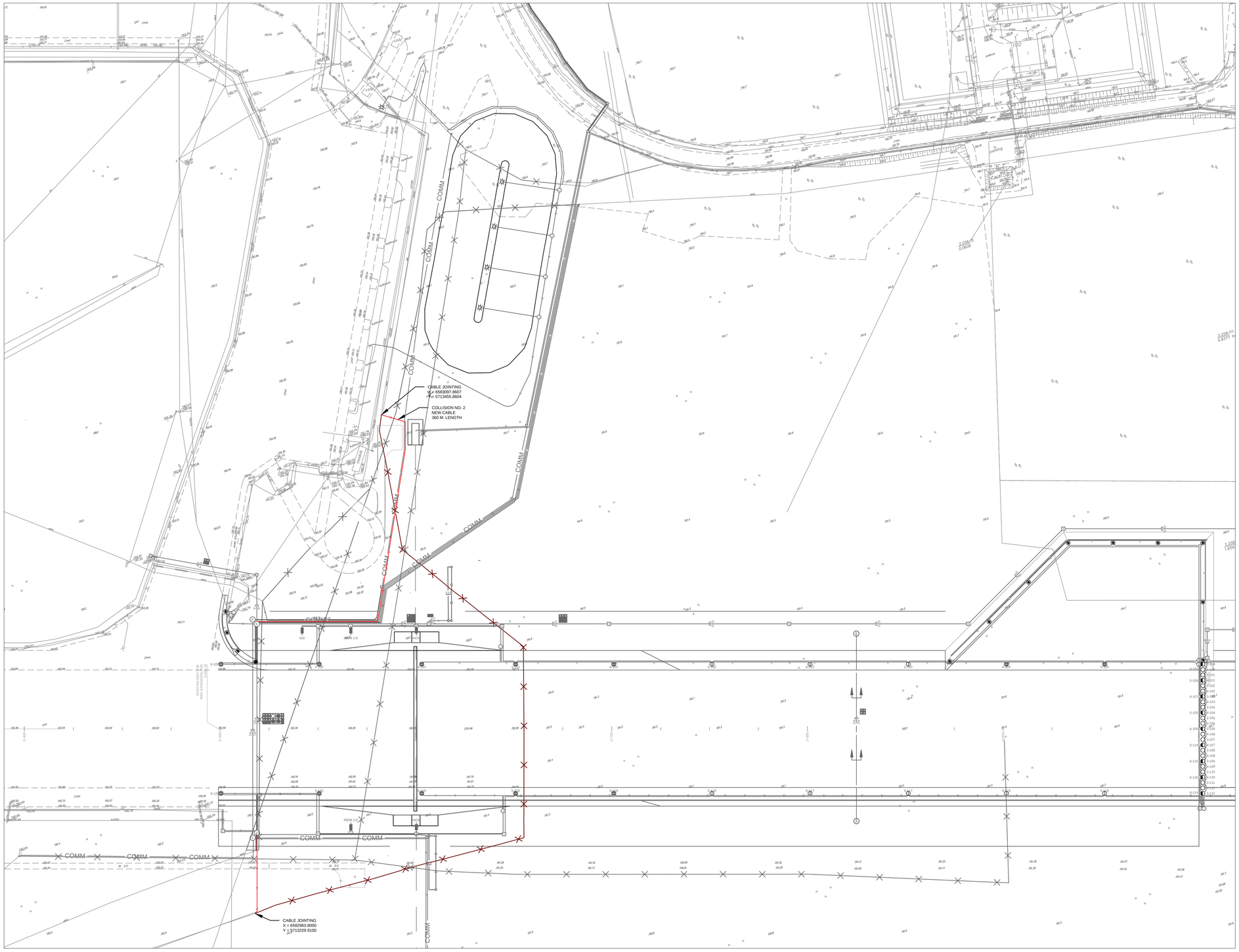

N

LEGEND:

PROPOSED CABLE
PROJ. KABEL

CABLE DEMOLITION
KABEL DO DEMONTAŻU

COLLISION NO. 2:

CABLE DISASSEMBLY - 429 LM

CABLE JOINTING - 2 LS

CABLE TRENCH - 217 LM

YAKY4x185mm² CABLE - 360 LM

0 25
SCALE IN METERS

US Army Corps of Engineers®

MARK	DESCRIPTION	DATE

DESIGNED BY: K. LOPEZ
DRAWN BY: M. STASIEWICZ
CHECKED BY: K. LEPERA
SUBMITTED BY: D. DIEHL
SIZE: ANSI D
ISSUE DATE: MARCH 2017
SOLICITATION NO.:
PROJECT NO.: PAY215002A

U.S. ARMY CORPS OF ENGINEERS
KONRAD ADENAUER RING 39
WIESBADEN, D-65187 / GERMANY

AECOM INTERNATIONAL, INC.
SIEMENSSTRAAE 10
NEU-ISENBURG, 63263

ERI: IMPROVE SUPPORT INFRASTRUCTURE
ŁASK AB, POLAND

ELECTRICAL COLLISIONS SITE PLAN
PLAN SYTUACYJNY KOLIZJI ELEKTRYCZNYCH

SHEET ID
E-606

C:\PWWORKING\AECOM_EU\LLAWICKA\D0159839\15-D-0008-0003EE-106.DWG
5/12/2016 LUCYNA.LAWICKA 1:1000

100%

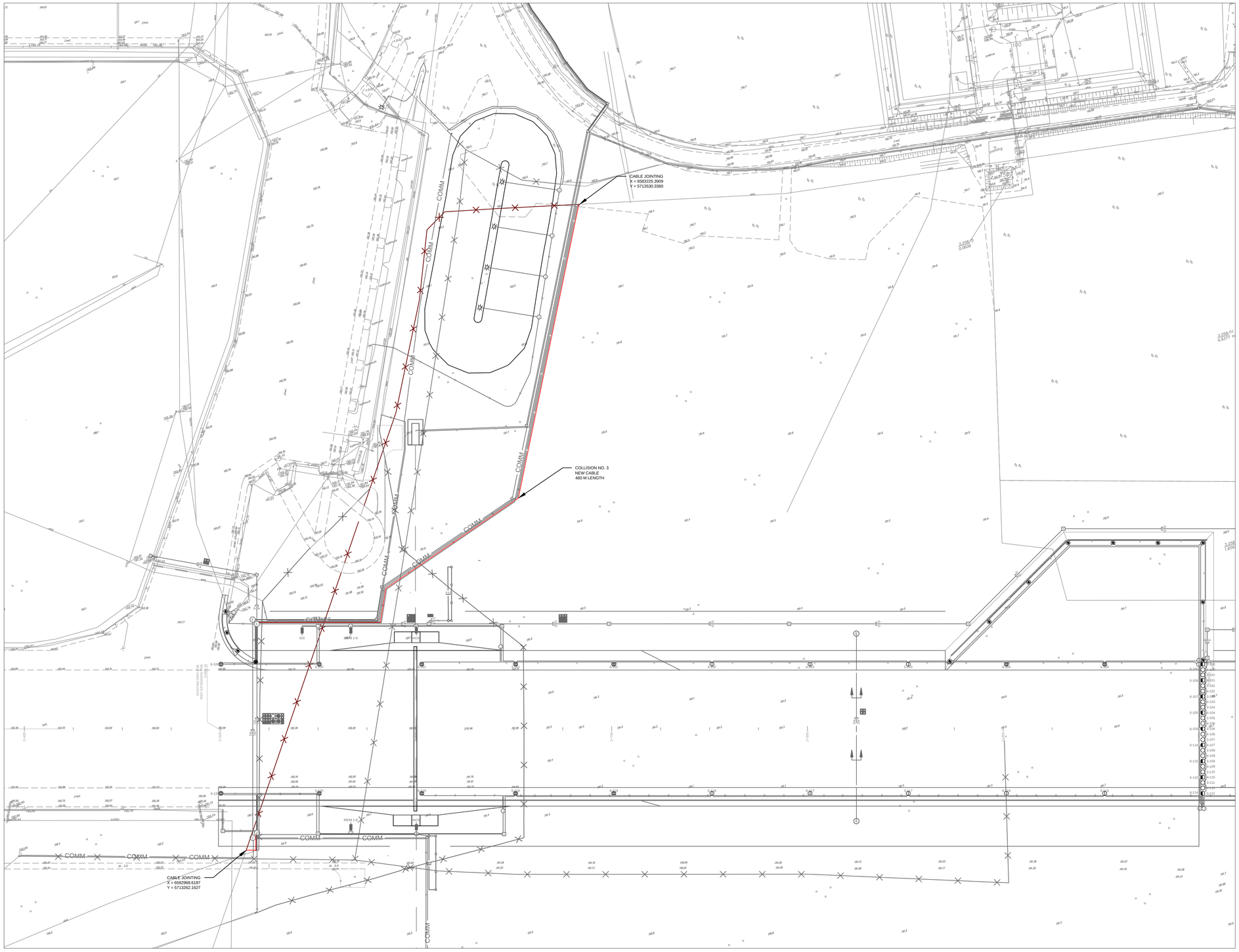

N

LEGEND:

PROPOSED CABLE
PROJ. KABEL

CABLE DEMOLITION
KABEL DO DEMONTAŻU

COLLISION NO. 3:

CABLE DISASSEMBLY - 536 LM

CABLE JONTING - 2 LS

CABLE TRENCH - 328 LM

YAKY4x120mm² CABLE - 480 LM

CABLE PROTECTION PIPE HDPE(110)
1 LM

US Army Corps of Engineers®

MARK	DESCRIPTION	DATE

DESIGNED BY: K. LOPEZ
DRAWN BY: M. STASIEWICZ
CHECKED BY: K. LEPERA
SUBMITTED BY: D. DIEHL
SIZE: ANSI D
ISSUE DATE: MARCH 2017
SOLICITATION NO.:
PROJECT NO.: PAY215002A

U.S. ARMY CORPS OF ENGINEERS
KONRAD ADENAUER RING 39
WIESBADEN, D-65187 / GERMANY

AECOM INTERNATIONAL, INC.
SIEMENSSTRAAE 10
NEU-ISENBURG, 63263

ERI: IMPROVE SUPPORT INFRASTRUCTURE
ŁASK AB, POLAND

ELECTRICAL COLLISIONS SITE PLAN
PLAN SYTUACYJNY KOLIZJI ELEKTRYCZNYCH

SHEET ID

E-607

C:\PWWORKING\AECOM_EU\LLAWICKA\D0159839\15-D-0008-0003EE-106.DWG
5/12/2016 LUCYNA.LAWICKA 1:1000

100%

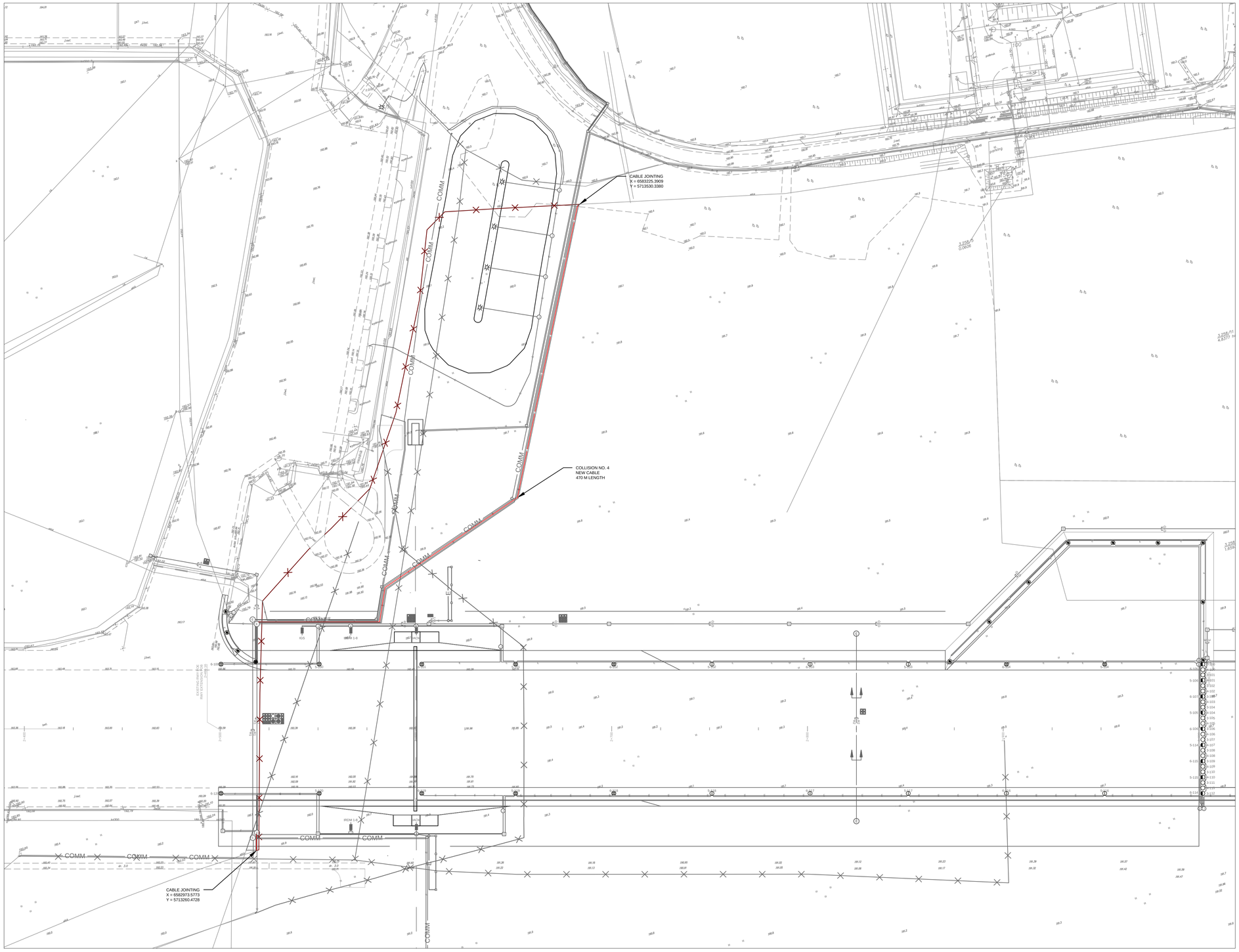

LEGEND:

PROPOSED CABLE
PROJ. KABEL

CABLE DEMOLITION
KABEL DO DEMONTAŻU

COLLISION NO. 4:

CABLE DISASSEMBLY - 468 LM

CABLE JOINTING - 2 LS

CABLE TRENCH - 322 LM

YAKY4x120mm² CABLE - 470 LM

CABLE PROTECTION PIPE HDPE(110)
1 LM

0 25
SCALE IN METERS

US Army Corps of Engineers®

MARK	DESCRIPTION	DATE

DESIGNED BY: K. F. LOPEZ
DRAWN BY: M. STASIEWICZ
CHECKED BY: K. LEPERA
SUBMITTED BY: D. DIEHL
SIZE: ANSI D
ISSUE DATE: MARCH 2017
SOLICITATION NO.:
PROJECT NO.: PAY215002A

U.S. ARMY CORPS OF ENGINEERS
KONRAD ADENAUER RING 39
WIESBADEN, D-65187 / GERMANY

AECOM INTERNATIONAL, INC.
SIEMENSSTRAŞE 10
NEU-ISENBURG, 63263

ERI: IMPROVE SUPPORT INFRASTRUCTURE
ŁASK AB, POLAND

ELECTRICAL COLLISIONS SITE PLAN
PLAN SYTUACYJNY KOLIZJI ELEKTRYCZNYCH

SHEET ID
E-608

C:\PWWORKING\AECOM_EU\LLAWICKA\D0159839\15-D-0008-0003EE-106.DWG
5/12/2016 LUCYNA.LAWICKA 1:1000

100%

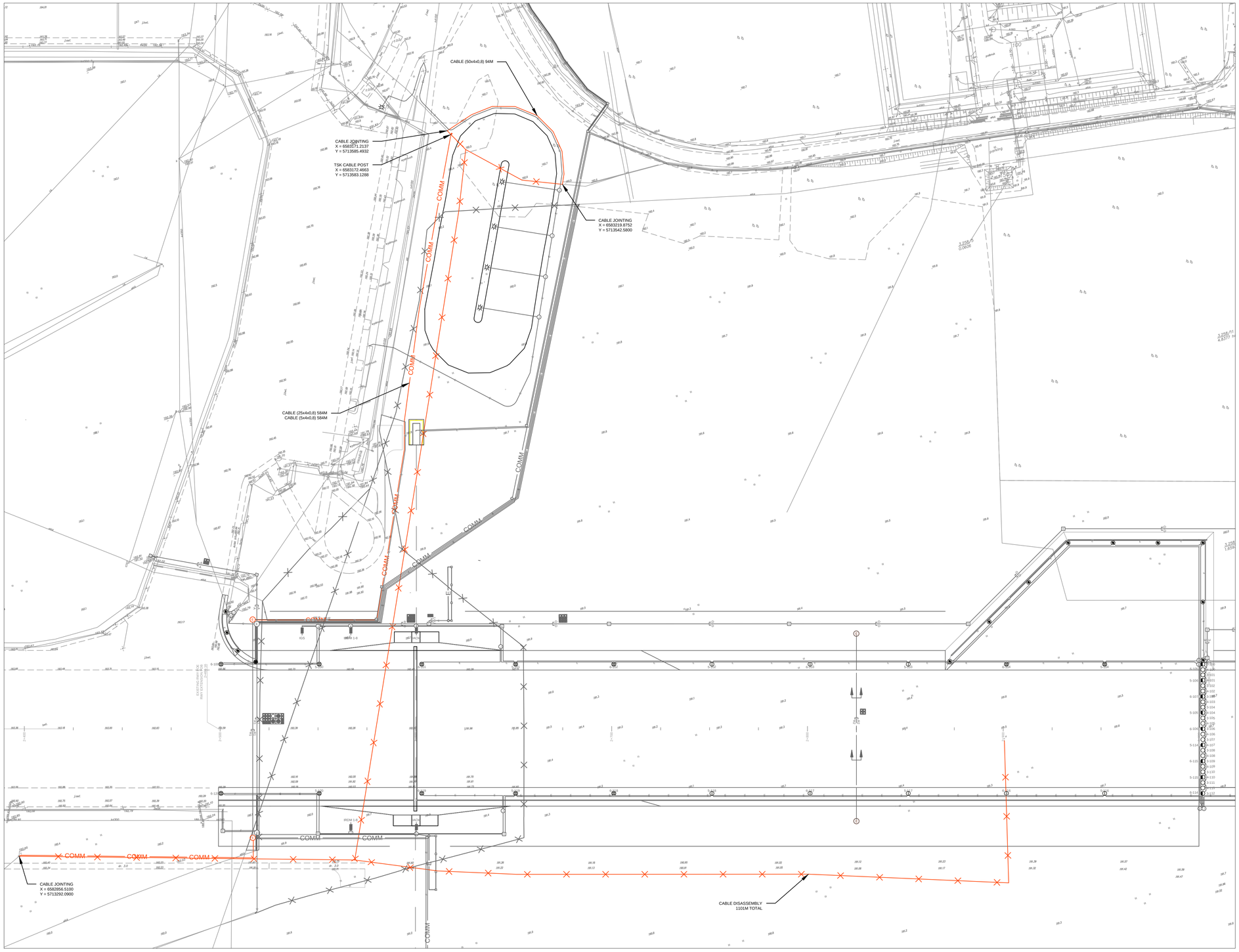

N

LEGEND:

- PROPOSED CABLE
  PROJ. KABEL
- CABLE DEMOLITION
  KABEL DO DEMONTAŻU
- COMM — COMM CKT
  OBWÓD TELEKOM.
- (E) COMM MANHOLE
  STUDNIA TELEKOM.

TELECOMMUNICATION COLLISIONS:

CABLE DISASSEMBLY - 1211 LM

CABLE TRENCH - 543 LM

CABLE (25x4x0,8) - 620 LM

CABLE (5x4x0,8) - 620 LM

CABLE (50x4x0,8) - 94 LM

SKR WELL - 4 LS

TSK CABLE POST - 1 LS

TELECOMMUNICATION CABLE JOINTING - 5 LS

0 25
SCALE IN METERS

US Army Corps of Engineers®

MARK	DESCRIPTION	DATE

ISSUE DATE: MARCH 2017
SOLICITATION NO.:
PROJECT NO.: PAY215002A

DESIGNED BY: K. LOPEZ
DRAWN BY: M. STASIEWICZ
CHECKED BY: K. LEPERA
SUBMITTED BY: D. DIEHL
SIZE: ANSI D

U.S. ARMY CORPS OF ENGINEERS
KONRAD ADENAUER RING 39
WIESBADEN, D-65187 / GERMANY

AECOM INTERNATIONAL, INC.
SIEMENSSTRAE 10
NEU-ISENBURG, 63263

ERI: IMPROVE SUPPORT INFRASTRUCTURE
ŁASK AB, POLAND

TELECOMMUNICATION COLLISIONS SITE PLAN
PLAN SYTUACYJNY KOLIZJI TELEKOMUNIKACYJNYCH

SHEET ID
E-609

C:\PWWORKING\AECOM_EU\LLAWICKA\D0159839\15-D-0008-0003EE-106.DWG
5/12/2016 LUCYNA.LAWICKA 1:1000

100%

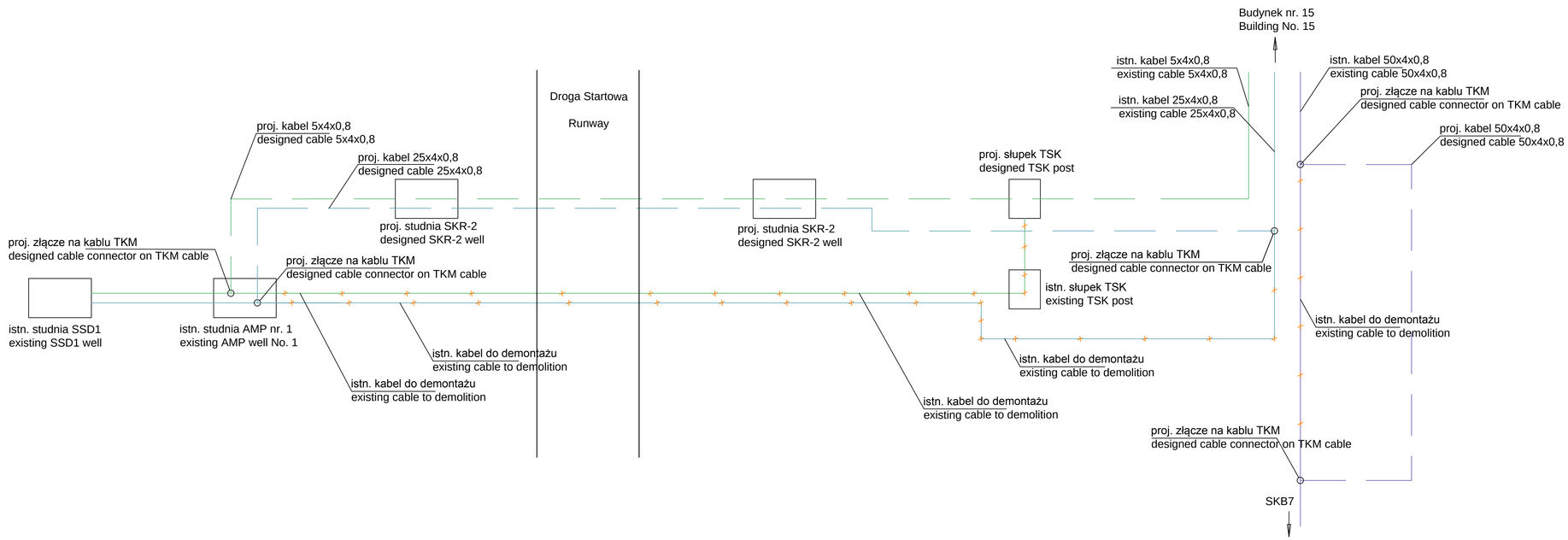

US Army Corps of Engineers®

MARK	DESCRIPTION	DATE

DESIGNED BY: K.F. LOPEZ
DRAWN BY: M.STASIEWICZ
CHECKED BY: K. LEPERA
SUBMITTED BY: D. DIEHL
SIZE: ANSI D
ISSUE DATE: MARCH 2017
SOLICITATION NO.:
PROJECT NO.: PAY215002A

U.S. ARMY CORPS OF ENGINEERS
KONRAD ADENAUER RING 39
WIESBADEN, D-65187 / GERMANY

AECOM INTERNATIONAL, INC.
SIEMENSSTRASE 10
NEU-ISENBURG, 63263

ERI: IMPROVE SUPPORT INFRASTRUCTURE
ŁASK AB, POLAND

TELECOMMUNICATION COLLISIONS SCHEME
SCHEMAT KOLIZJI TELEKOMUNIKACYJNYCH

SHEET ID
E-610

C:\PWWORKING\AECOM_EU\LLAWICKA\D0159839\15-D-0008-0003EE-106.DWG
5/12/2016 LUCYNA.LAWICKA 1:1000

100%

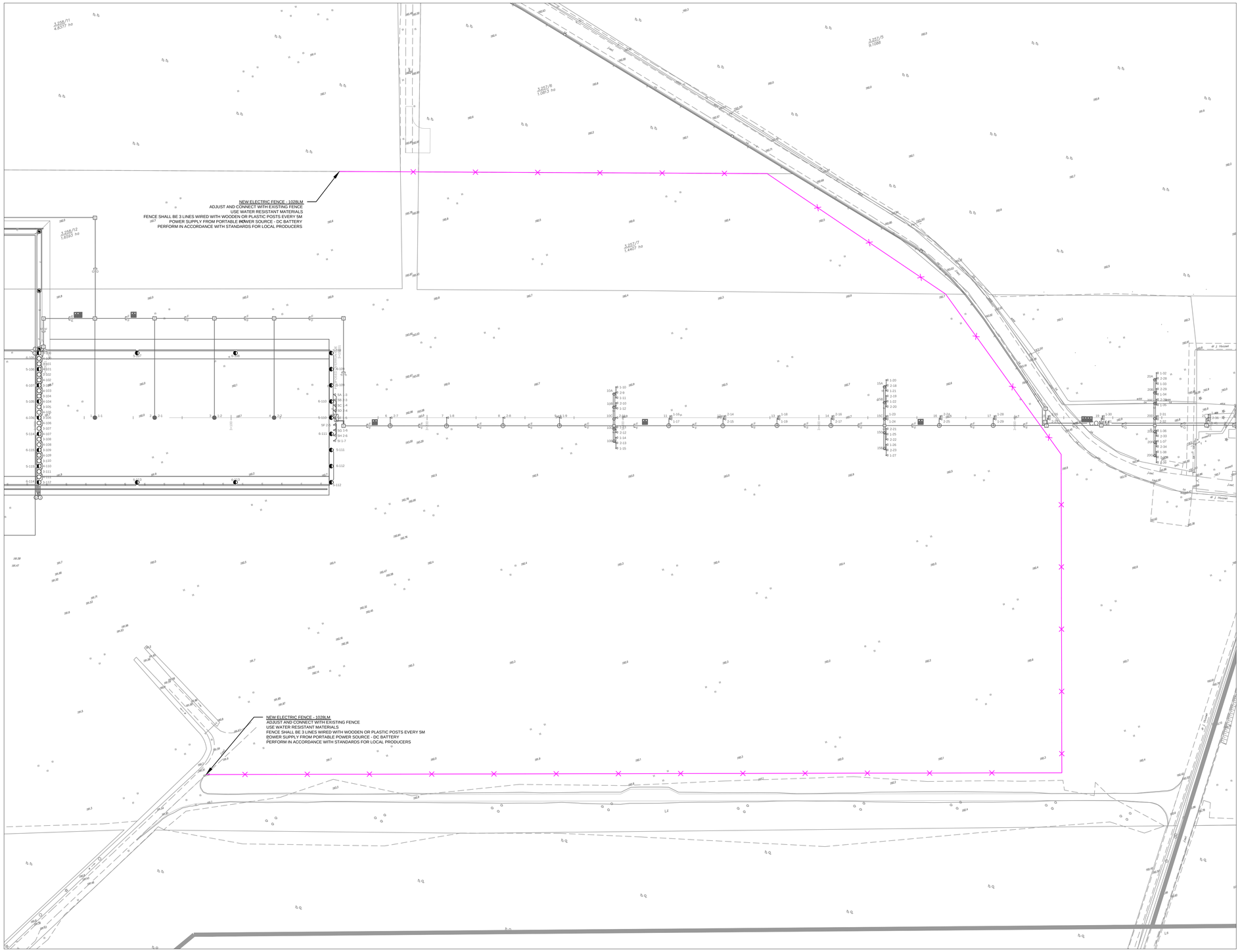

N

ELECTRICAL FENCE
OGRODZENIE ELEKTRYCZNE

0 25
SCALE IN METERS

US Army Corps of Engineers®

MARK	DESCRIPTION	DATE

DESIGNED BY: K. LOPEZ
DRAWN BY: M. STASIEWICZ
CHECKED BY: K. LEPERA
SUBMITTED BY: D. DIEHL
SIZE: ANSI D
ISSUE DATE: MARCH 2017
SOLICITATION NO.:
PROJECT NO.: PAY215002A

U.S. ARMY CORPS OF ENGINEERS
KONRAD ADENAUER RING 39
WIESBADEN, D-65187 / GERMANY

AECOM INTERNATIONAL, INC.
SIEMENSSTRAÇE 10
NEU-ISENBURG, 63263

ERI: IMPROVE SUPPORT INFRASTRUCTURE
ŁASK AB, POLAND

ELECTRICAL FENCE SCHEME
SCHEMAT OGRODZENIA ELEKTRYCZNEGO

SHEET ID
E-611

C:\PWWORKING\AEECOM_EU\LLAWICKA\D0159839\15-D-0008-0003EE-106.DWG
5/12/2016 LUCYNA.LAWICKA 1:1000

100%