INSTALLATION INSTRUCTIONS

SLATWALL

Marlite

Panel installation instructions

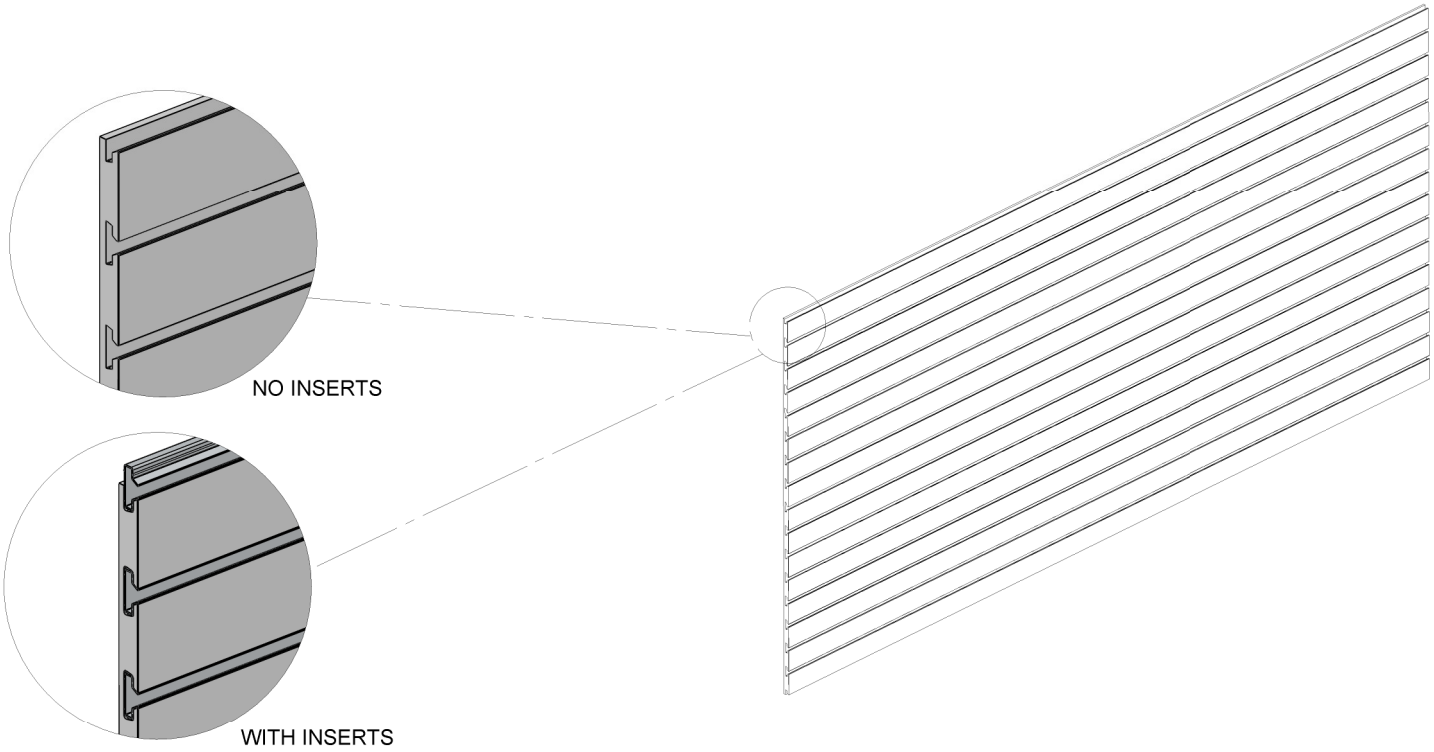

Statements expressed in this technical bulletin are the recommendations for the application of Marlite products as outlined and illustrated under normal conditions of installation. The recommendations provided in the bulletin represent our best judgment based on our experience with normal applications. Unless prior approval is obtained in writing from Marlite, any deviation from these recommended procedures shall be at the sole risk of the installers. Carefully inspect all parts. If a part is defective, notify the Marlite Service Center nearest to you at once. Failure to do so shall be at the sole risk of the installer.

System Overview

Marlite Slatwall is a simple and economical horizontal support system. Slatwall is used to establish retail environments including entire store walls, floor fixtures, or other specialty displays.

Slatwall is offered in a wide range of sizes, groove configurations, finishes, along with other custom solutions.

Typical panels are 3/4" thick, 4' x8' in size, and are grooved 3" O/C long groove. Grooves are either inserted or non-inserted, where as an aluminum inserted groove offers higher load carrying capacity.

Panel sizes, o/c spacing, groove treatments, and finishes are easily made-to-order in custom configurations.

See the **Slatwall brochure** for specifications and a full overview.

Installation Overview

- Define the installation area
- Establish a level baseline
- Screw the panel to the wall
- Align and secure subsequent panels to the wall, field cut as needed

Application

- Examples of suitable wall structures: wood, metal, concrete, or drywall all with adequate studs or vertical furring for securing the panels.

Safety

- Always wear proper safety glasses or goggles and hand protection. Be sure to use proper safety guards on tools and equipment.

Required Tools (by others)

- (2) or more people for handling panels
- Ordinary carpenter tools, laser level, chalk line
- Circular saw with fine tooth blade (carbided tipped for metal or mirror panel finishes)
- Power drill and screw gun
- ∅ 5/32" drill bit
- #6 or #7 bugle head drywall screws (proper length and type to be determined by installer based upon substructure)

Preparation and Handling

- Follow local building codes and procedures.
- Lift panels, do not slide, for they may scratch. Be careful of all edges and corners for they may be easily damaged and may be sharp.
- Building to be completely enclosed. Structural walls should be finished, dry, solid, and true.
- Allow panels to equalize to room environment prior to installing.

Marlite Dover, Ohio 44622 800-377-1221
www.marlite.com info@marlite.com

Form No. DW54-09091
Rev. 08/2010

Layout and Assembly

Define the Installation Area

- Review the construction documents and determine the areas that will receive the Slatwall panels.
- Slatwall may be installed directly over metal or wood studs or over drywall surfaces.
- Verify installation area has adequate supporting studs or vertical furring.

Step 1 - Define a level base line for the entire area

- Strike a level line with a laser level or chalk line at the height of a panel across the length of the installation.
- All panel edges must align exactly with this line for proper results.

Step 2 - Secure initial panel to the wall with screws

- Fasten initial bottom panel to the wall with **#6 or #7 bugle head drywall** screws. (See Fig. 2.1) Install a minimum of one screw every third slot(or 9") vertically and every stud horizontally, typically every 16" o/c horizontally (maximum 24" o/c horizontally). Each 4' x8' panel should have minimum of (42) screws secured to studs or furring.
- Slatwall non-inserted panels do not require pre-drilling.
- Slatwall inserted panels require ∅5/32" predrilling of holes thru the insert and panel for the mounting screws. Screws must be installed thru the inserts to ensure optimum hang strength. (See Fig. 2.2)

Step 3 - Align grooves and secure subsequent panels to the wall

- Edge of panels typically exhibit a 1/2 groove and when butted together they form a full groove.
- For inserted panels, an insert must be pre-installed at the horizontal panel seams prior to being secured to the wall. (See Fig. 3.1)
- All panels to be secured to the wall with screws as noted in previous step. Caution: Failure to follow recommended fastener scheme may have negative effects on the stability and hang strength capability of the Slatwall.

Step 5 - Repeat until elevation is completed per plan

- Field cut panels as needed. Cut panels face down with a circular saw or face up if using a table saw to minimize chipping and ensure a clean cut edge.

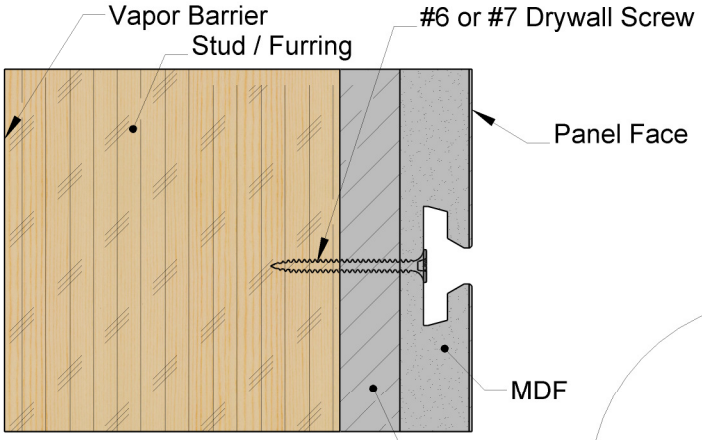

Typical Section Thru Non-Inserted Groove

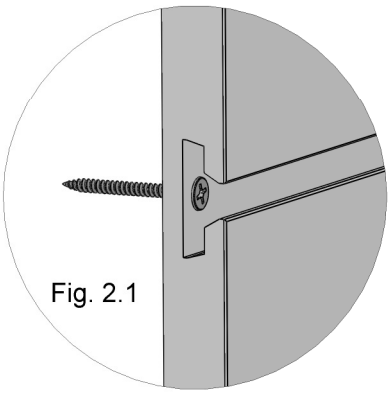

Fig. 2.1

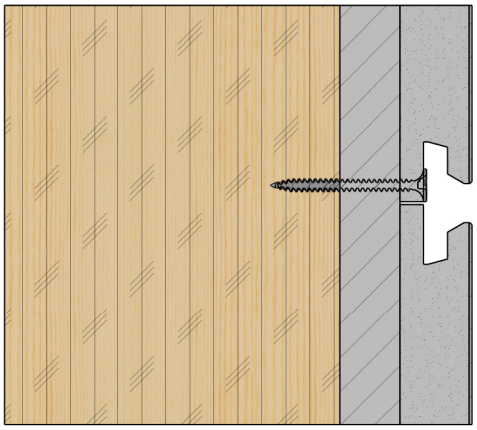

Typical Section Thru Horizontal Butt Joint

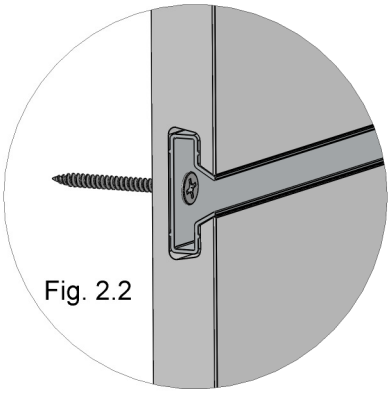

Fig. 2.2

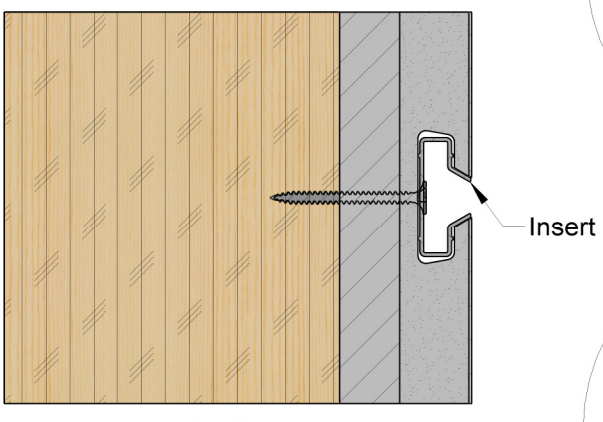

Typical Section Thru Inserted Groove

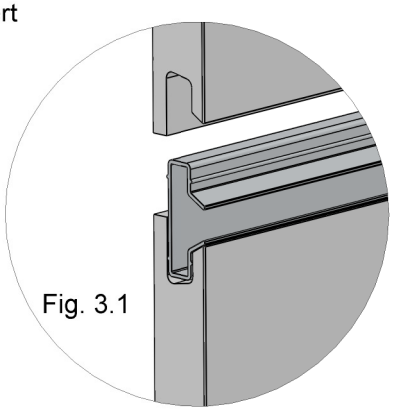

Fig. 3.1

For final cleanup, see Marlite's:
"CARE AND CLEANING OF RETAIL SYSTEMS"

Marlite Dover, Ohio 44622 800-377-1221
www.marlite.com info@marlite.com

Form No. DW54-09091
Rev. 08/2010